WORX®

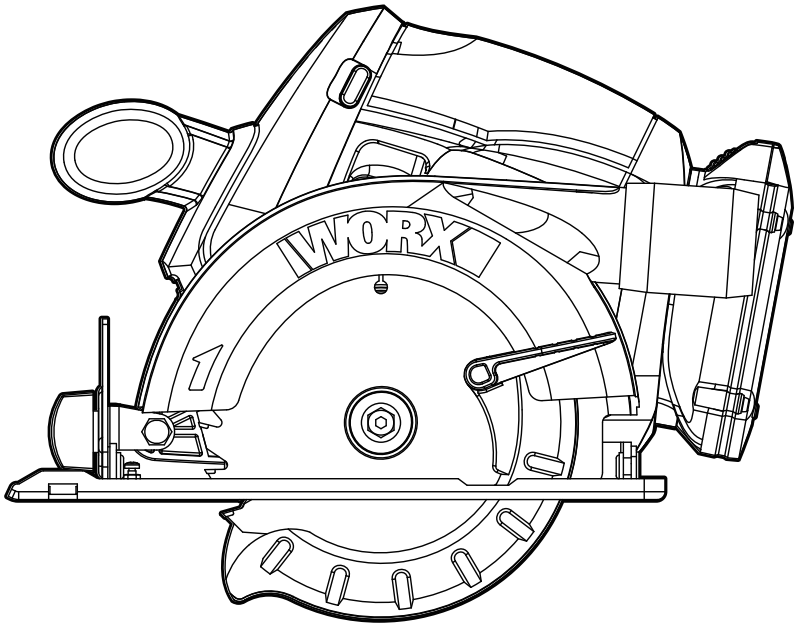

Cordless Circular Saw	**EN**	**P02**
Scie circulaire sans fil	**F**	**P14**
Sierra circular inalámbrica	**ES**	**P23**

HELPLINE NUMBER
NUMÉRO DU SERVICE D'ASSISTANCE
NÚMERO DE LÍNEA DE AYUDA
1-866-354-WORX (9679)

WX529L WX529L.9

PRODUCT SAFETY

⚠ WARNING: Some dust created by power sanding, sawing, grinding, drilling and other construction activities contains chemicals known to the State of California to cause cancer, birth defects or other reproductive harm. Some examples of these chemicals are:

- **Lead from lead-based paints;**
- **Crystalline silica from bricks and cement and other masonry products**
- **Arsenic and chromium from chemically-treated lumber.**

Your risk from these exposures varies, depending on how often you do this type of work. To reduce your exposure to these chemicals, work in a well ventilated area, and work with approved safety equipment, such as those dust masks that are specially designed to filter out microscopic particles.

⚠ WARNING: This product can expose you to chemicals including lead, phthalate or bisphenol A which are known to the State of California to cause cancer, birth defects or other reproductive harm. Wash your hands after use. For more information go to www.P65Warnings.ca.gov.

GENERAL POWER TOOL SAFETY WARNINGS

⚠ WARNING: Read all safety warnings, instructions, illustrations and specifications provided with this power tool. Failure to follow the warnings and instructions may result in electric shock, fire and/or serious injury.

Save all warnings and instructions for future reference.
The term power tool in the warnings refers to your electric (corded) power tool or battery-operated (cordless) power tool.

1. WORK AREA SAFETY

a) Keep work area clean and well lit. Cluttered or dark areas invite accidents.

b) Do not operate power tools in explosive atmospheres, such as in the presence of flammable liquids, gases or dust. Power tools create sparks which may ignite the dust or fumes.

c) Keep children and bystanders away while operating a power tool. Distractions can cause you to lose control.

2. ELECTRICAL SAFETY

a) Power tool plugs must match the outlet. Never modify the plug in any way. Do not use any adapter plugs with grounded power tools. Unmodified plugs and matching outlets will reduce risk of electric shock.

b) Avoid body contact with grounded surfaces such as pipes, radiators, ranges and refrigerators. There is an increased risk of electric shock if your body is grounded.

c) Do not expose power tools to rain or wet conditions. Water entering a power tool will increase the risk of electric shock.

d) Do not abuse the cord. Never use the cord for carrying, pulling or unplugging the power tool. Keep cord away from heat, oil, sharp edges or moving parts. Damaged or entangled cords increase the risk of electric shock.

e) When operating a power tool outdoors, use an extension cord suitable for outdoor use marked "W-A" or "W". Use of a cord suitable for outdoor use reduces the risk of electric shock.

f) If operating a power tool in a damp location is unavoidable,use a residual current device (RCD) protected supply. Use of an RCD reduces the risk of electric shock.

3. PERSONAL SAFETY

a) Stay alert, watch what you are doing and use common sense when operating a power tool. Do not use a power tool while you are tired or under the influence of drugs, alcohol or medication. A moment of inattention while operating power tools may result in serious personal injury.

b) Use personal protective equipment. Always wear eye protection. Protective equipment such as dust mask, non-skid safety shoes, hard hat, or hearing protection used for appropriate conditions will reduce personal injuries.

c) Prevent unintentional starting. Ensure the switch is in the off-position before connecting to power source and/or battery pack, picking up or carrying the tool. Carrying power tools with your finger on the switch or energizing power tools that have the switch on invites accidents.

d) Remove any adjusting key or wrench before turning the power tool on. A wrench or a key left attached to a rotating part of the power tool may result in personal injury.

e) Do not overreach. Keep proper footing and balance at all times. This enables better control of the power tool in unexpected situations.

f) Dress properly. Do not wear loose clothing or jewellery. Keep your hair and clothing away from moving parts. Loose clothes, jewellery or long hair can be caught in moving parts.

g) If devices are provided for the connection of dust extraction and collection facilities, ensure these are connected and properly used. Use of dust collection can reduce dust-related hazards.

h) Do not let familiarity gained from frequent use of tools allow you to become complacent and ignore tool safety principles. A careless action can cause severe injury within a fraction of a second.

4. POWER TOOL USE AND CARE

a) Do not force the power tool. Use the correct power tool for your application. The correct power tool will do the job better and safer at the rate for which it was designed.

b) Do not use the power tool if the switch does not turn it on and off. Any power tool that cannot be controlled with the switch is dangerous and must be repaired.

c) Disconnect the plug from the power source and/or the battery pack from the power tool before making any adjustments, changing accessories, or storing power tools. Such preventive safety measures reduce the risk of starting the power tool accidentally.

d) Store idle power tools out of the reach of children and do not allow persons unfamiliar with the power tool or these instructions to operate the power tool. Power tools are dangerous in the hands of untrained users.

e) Maintain power tools. Check for misalignment or binding of moving parts, breakage of parts and any other condition that may affect the power tool`s operation. If damaged, have the power tool repaired before use. Many accidents are caused by poorly maintained power tools.

f) Keep cutting tools sharp and clean. Properly maintained cutting tools with sharp cutting edges are less likely to bind and are easier to control.

g) Use the power tool, accessories and tool bits etc., in accordance with these instructions and in the manner intended for the particular type of power tool, taking into account the working conditions and the work to be performed. Use of the power tool for operations different from those intended could result in a hazardous situation.

h) Keep handles and grasping surfaces dry, clean and free from oil and grease. Slippery handles and grasping surfaces do not allow for safe handling and control of the tool in unexpected situations.

5. BATTERY TOOL USE AND CARE

a) Recharge only with the charger specified by the manufacturer. A charger that is suitable for one type of battery pack may create a risk of fire when used with another battery pack.

b) Use power tools only with specifically designated battery packs. Use of any other battery packs may create a risk of injury and fire.

c) When battery pack is not in use, keep it away from other metal objects, like paper clips, coins, keys, nails, screws or other small metal objects, that can make a connection from one terminal to another. Shorting the battery terminals together may cause burns or a fire.

d) Under abusive conditions, liquid may be ejected from the battery; avoid contact. If contact accidentally occurs, flush with water. If liquid contacts eyes, additionally seek medical help. Liquid ejected from the battery may cause irritation or burns.

e) Do not use a battery pack or tool that is damaged or modified. Damaged or modified batteries may exhibit unpredictable behaviour resulting in fire, explosion or risk of injury.

f) Do not expose a battery pack or tool to fire or excessive temperature. Exposure to fire or temperature above 130 °C may cause explosion.

g) Follow all charging instructions and do not charge the battery pack or tool outside the temperature range specified in the instructions. Charging improperly or at temperatures outside the specified range may damage the battery and increase the risk of fire.

6. SERVICE

a) Have your power tool serviced by a qualified repair person using only identical replacement parts. This will ensure that the safety of the power tool is maintained.

b) Never service damaged battery packs. Service of battery packs should only be performed by the manufacturer or authorized service providers.

SAFETY INSTRUCTIONS FOR ALL SAWS

a) DANGER: Keep hands away from cutting area and the blade. Keep your second hand on auxiliary handle, or motor housing. If both hands are holding the saw, they cannot be cut by the blade.

b) Do not reach underneath the workpiece. The guard cannot protect you from the blade below the workpiece.

c) Adjust the cutting depth to the thickness of the workpiece. Less than a full tooth of the blade teeth should be visible below the workpiece.

d) Never hold piece being cut in your hands or across your leg. Secure the workpiece to a stable platform. It is important to support the work properly to minimize body exposure, blade binding, or loss of control.

e) **Hold the power tool by insulated gripping surfaces only, when performing an operation where the cutting tool may contact hidden wiring.** Contact with a "live" wire will also make exposed metal parts of the power tool "live" and could give the operator an electric shock.

f) **When ripping always use a rip fence or straight edge guide.** This improves the accuracy of cut and reduces the chance of blade binding.

g) **Always use blades with correct size and shape (diamond versus round) of arbor holes.** Blades that do not match the mounting hardware of the saw will run eccentrically, causing loss of control.

h) **Never use damaged or incorrect blade washers or bolt.** The blade washers and bolt were specially designed for your saw, for optimum performance and safety of operation.

FURTHER SAFETY INSTRUCTIONS FOR ALL SAWS

Kickback causes and related warnings

. Kickback is a sudden reaction to a pinched, bound or misaligned saw blade, causing an uncontrolled saw to lift up and out of the workpiece toward the operator.

. When the blade is pinched or bound tightly by the kerf closing down, the blade stalls and the motor reaction drives the unit rapidly back toward the operator.

. If the blade becomes twisted or misaligned in the cut, the teeth at the back edge of the blade can dig into the top surface of the wood causing the blade to climb out of the kerf and jump back toward the operator.

Kickback is the result of saw misuse and/or incorrect operating procedures or conditions and can be avoided by taking proper precautions as given below.

a) **Maintain a firm grip with both hands on the saw and position your arms to resist kickback forces. Position your body to either side of the blade, but not in line with the blade.** Kickback could cause the saw to jump backwards, but kickback forces can be controlled by the operator, if proper precautions are taken.

b) **When blade is binding, or when interrupting a cut for any reason, release the trigger and hold the saw motionless in the material until the blade comes to a complete stop. Never attempt to remove the saw from the work or pull the saw backward while the blade is in motion or kickback may occur.** Investigate and take corrective actions to eliminate the cause of blade binding.

c) **When restarting a saw in the workpiece, center the saw blade in the kerf and check that saw teeth are not engaged into the material.** If saw blade is binding, it may walk up or kickback from the workpiece as the saw is restarted.

d) **Support large panels to minimize the risk of blade pinching and kickback.** Large panels tend to sag under their own weight. Supports must be placed under the panel on both sides, near the line of cut and near the edge of the panel.

e) **Do not use dull or damaged blades.** Unsharpened or improperly set blades produce narrow kerf causing excessive friction, blade binding and kickback.

f) **Blade depth and bevel adjusting locking levers must be tight and secure before making cut.** If blade adjustment shifts while cutting, it may cause binding and kickback.

g) **Use extra caution when sawing into existing walls or other blind areas.** The protruding blade may cut objects that can cause kickback.

SAFETY INSTRUCTIONS FOR CIRCULAR SAW WITH INNER PENDULUM GUARD

Lower guard function

a) **Check lower guard for proper closing before each use. Do not operate the saw if lower guard does not move freely and close instantly. Never clamp or tie the lower guard into the open position.** If saw is accidentally dropped, lower guard may be bent. Raise the lower guard with the retracting handle and make sure it moves freely and does not touch the blade or any other part, in all angles and depths of cut.

b) **Check the operation of the lower guard spring. If the guard and the spring are not operating properly, they must be serviced before use.** Lower guard may operate sluggishly due to damaged parts, gummy deposits, or a build-up of debris.

c) **Lower guard may be retracted manually only for special cuts such as "plunge cuts" and "compound cuts." Raise lower guard by retracting handle and as soon as blade enters the material, the lower guard must be released.** For all other sawing, the lower guard should operate automatically.

d) **Always observe that the lower guard is covering the blade before placing saw down on bench or floor.** An unprotected, coasting blade will cause the saw to walk backwards, cutting whatever is in its path. Be aware of the time it takes for the blade to stop after switch is released.

ADDITIONAL SAFETY RULES FOR YOUR CIRCULAR SAW

1. Only use saw blades recommended in the specification.
2. Do not use any abrasive wheels.
3. Use only blade diameter(s) in accordance with the markings.
4. Identify the correct saw blade to be used for the material to be cut.
5. Use only saw blades that are marked with a speed equal or higher than the speed marked on the tool.

SAFETY WARNINGS FOR BATTERY PACK

a) Do not dismantle, open or shred battery pack.

b) Do not expose battery pack to heat or fire. Avoid storage in direct sunlight.

c) Do not short-circuit a battery pack. Do not store battery packs haphazardly in a box or drawer where they may short-circuit each other or be short-circuited by other metal objects. When battery pack is not in use, keep it away from other metal objects, like paper clips, coins, keys, nails, screws or other small metal objects, that can make a connection from one terminal to another. Shorting the battery terminals together may cause burns or fire.

d) Do not remove battery pack from its original packaging until required for use.

e) Do not subject battery pack to mechanical shock.

f) In the event of battery leaking, do not allow the liquid to come in contact with the skin or eyes. If contact has been made, wash the affected area with copious amounts of water and seek medical advice.

g) Observe the plus (+) and minus (–) marks on the battery back and equipment and ensure correct use.

h) Do not use any battery pack which is not designed for use with the equipment.

i) Keep battery pack out of the reach of children.

j) Seek medical advice immediately if a cell or battery has been swallowed.

k) Always purchase the battery pack recommended by the device manufacturer for the equipment.

l) Keep battery pack clean and dry.

m) Wipe the battery pack terminals with a clean dry cloth if they become dirty.

n) Battery pack needs to be charged before use. Always use the correct charger and refer to the manufacturer's instructions or equipment manual for proper charging instructions.

o) Do not leave battery pack on prolonged charge when not in use.

p) After extended periods of storage, it may be necessary to charge and discharge the battery pack several times to obtain maximum performance.

q) Battery pack gives its best performance when it is operated at normal room temperature (20 °C ± 5 °C).

r) When disposing of battery packs, keep battery packs of different electrochemical systems separate from each other.

s) Recharge only with the charger specified by WORX. Do not use any charger other than that specifically provided for use with the equipment. A charger that is suitable for one type of battery pack may create a risk of fire when used with another battery pack.

t) Retain the original product literature for future reference.

u) Use only the battery pack in the application for which it was intended.

v) Remove the battery pack from the equipment when not in use.

w) Dispose of properly.

SYMBOLS

	To reduce the risk of injury, user must read instruction manual
	Warning
	Wear ear protection
	Wear eye protection
	Wear dust mask
	Do not expose to rain or water
	Do not burn
 Li-Ion	Li-Ion battery, battery must be recycled.
	Make sure the battery is removed prior to changing accessories or making any adjustments to the tool.
	Wear protective gloves
	Wood
	TCT blade
	Lock
	Unlock



call2recycle®

POSITEC Inc. has established a partnership with the RBRC Corporation to recycle any Positec batteries with the RBRC-call2recycle seal. For environmental protection, please do not discard batteries in the trash. After the batteries' life cycle is ended, then please call 1-800-822-8837 for a free service that will properly dispose of the battery.

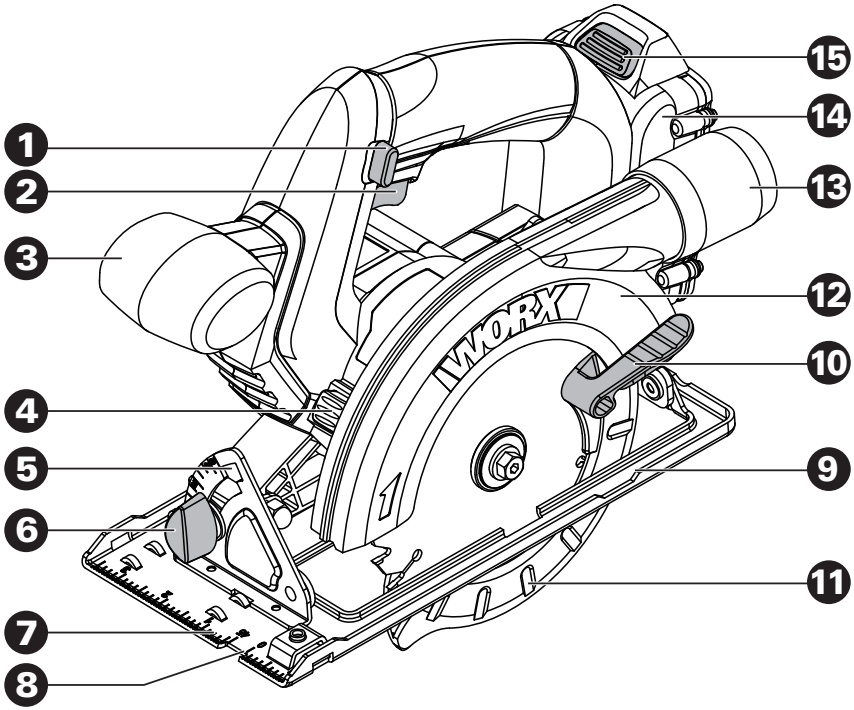
1
2
3
4
5
6
7
8
9
10
11
12
13
14
15
WORX

1.	LOCK-OFF BUTTON
2.	ON/OFF SWITCH
3.	FRONT HANDLE
4.	SPINDLE LOCK BUTTON
5.	BASE PLATE ANGLE SCALE
6.	BASE PLATE BEVEL LOCK KNOB
7.	CUTTING MARK, 45°
8.	CUTTING MARK, 0°
9.	BASE PLATE
10.	LOWER GUARD LEVER
11.	LOWER BLADE GUARD
12.	FIXED GUARD
13.	DUST ADAPTER
14.	BATTERY PACK *
15.	BATTERY PACK RELEASE BUTTON *
16.	SPINDLE (SEE FIG. B)
17.	INNER FLANGE (SEE FIG. B)
18.	SAW BLADE (SEE FIG. B)
19.	OUTER FLANGE (SEE FIG. B)
20.	BLADE BOLT (SEE FIG. B)
21.	CUTTING DEPTH SCALE (SEE FIG. C)
22.	HEX KEY (SEE FIG. C)
23.	CUTTING DEPTH LOCK KNOB (SEE FIG. C)
24.	HEX KEY STORAGE AREA (SEE FIG. C)
25.	ADJUSTMENT SCREW (SEE FIG. C)
26.	DUST EXTRACTION OUTLET (SEE FIG. H)

***Not all the accessories illustrated or described are included in standard delivery.**

TECHNICAL DATA

Type **WX529L WX529L.9 (5 - designation of machinery, representative of circular saw)**

	WX529L	WX529L.9
Voltage	20V ⎓ Max.**	
No load speed	3600/min	
Blade size	5-1/2" (140mm)	
Blade bore	3/8" (10mm)	
Saw blade thickness TCT blade	1.8mm	
Max cutting depth	1-5/8" (41.5mm)	
Cutting capacity Cutting depth at 45° Cutting depth at 90°	 1-3/16" (30mm) 1-5/8" (41.5mm)	
Bevel capacity	0-50°	
Machine weight	6.06lbs (2.75kg)	5.22lbs (2.37kg)

**Voltage measured without workload. Initial battery voltage reaches maximum of 20 volts. Nominal voltage is 18 volts.

ACCESSORIES

	WX529L	WX529L.9
TCT 24T Blade (WA5042)	1	1
Dust adapter	1	1
Hex Key	1	1
Battery pack (WA3525)	1	/
Charger (WA3742)	1	/

We recommend that you purchase your accessories from the same store that sold you the tool. Refer to the accessory packaging for further details. Store personnel can assist you and offer advice.

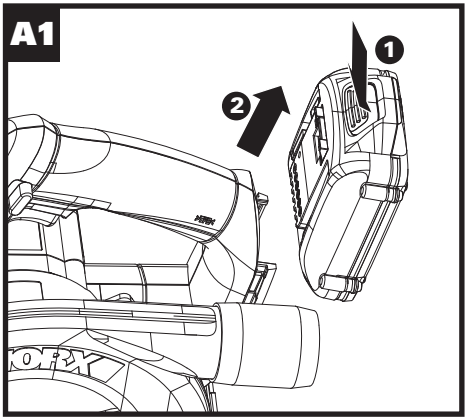
A1
1
2

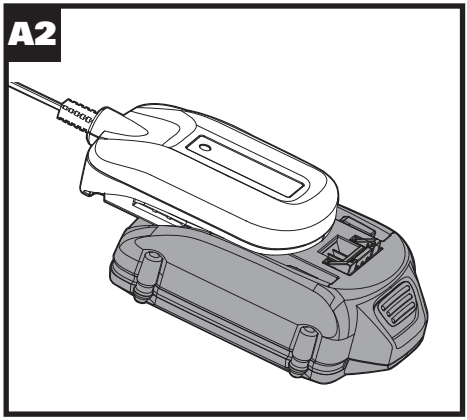
A2

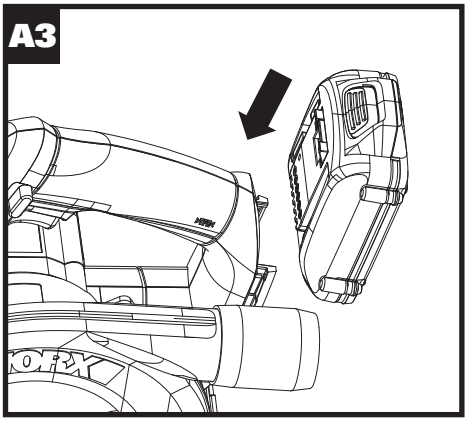
A3

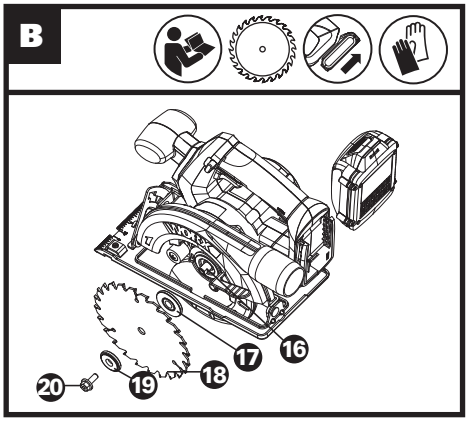
B
16
17
18
19
20

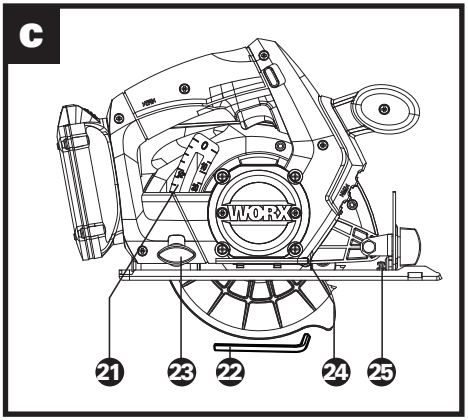
C
21
23
22
24
25

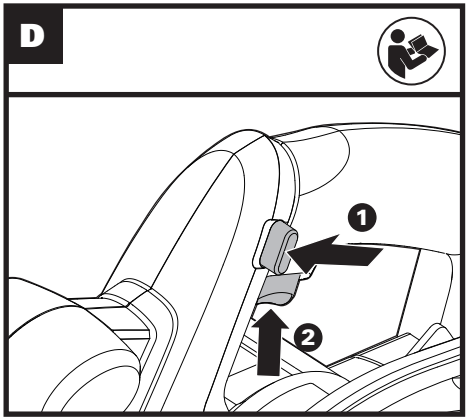
D
1
2

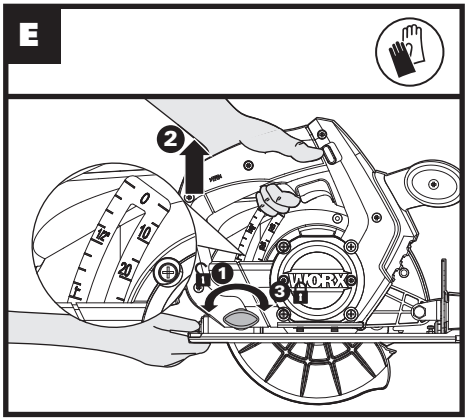
E
2
1
3

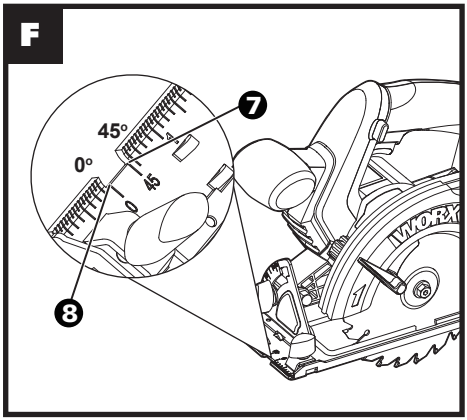
F
45°
0°
7
8

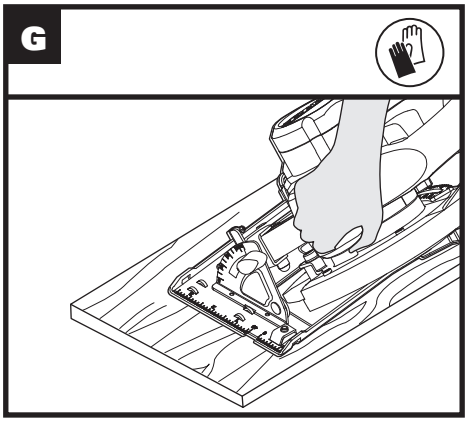
G

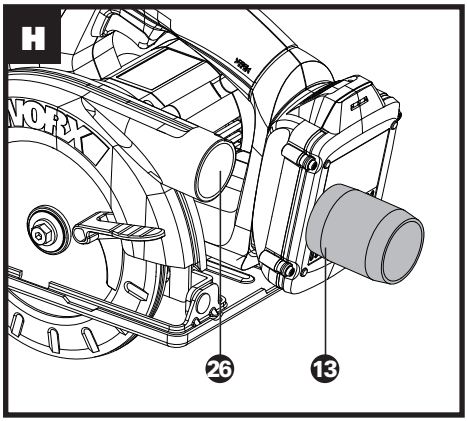
H
26
13

OPERATING INSTRUCTIONS

NOTE: Before using the tool, read the instruction book carefully.

INTENDED USE:
The tool is intended for ripping and cross-cutting wood and other materials in straight cutting lines, while resting firmly on the work piece.

ASSEMBLY AND OPERATION

ACTION	FIGURE
BEFORE OPERATION	
Removing the battery pack	See Fig. A1
Charging the battery back	See Fig. A2
Installing the battery pack	See Fig. A3
ASSEMBLY	
Saw blade assembly and removing **WARNING:** Always remove the battery before changing the blade!	See Fig. B
Hex key storage	See Fig. C
Safety On/Off Switch **WARNING:** To avoid cutting injury from the sharp blade, please don't put your hands around the Base Plate.	See Fig. D
Cutting Depth Adjusting	See Fig. E
Cutting Guide	See Fig. F
Bevel cuts	See Fig. G
Sawdust Removal	See Fig. H

WORKING TIPS FOR YOUR TOOL

If your power tool becomes too hot, please run your circular saw no load for 2-3 minutes to cool the motor. Avoid prolonged usage at very low speeds. Protect saw blades against impact and shock. Cutting with extreme force can significantly reduces the performance capability of the tool and reduces the service life of the saw blade. Sawing performance and cutting quality depend essentially on the condition and the tooth count of the saw blade. Therefore, use only sharp saw blades that are suited for the material being cut.
Choice of blades: 24 teeth for general work, approx. 40 teeth for finer cuts, more than 40 teeth for very fine cuts into delicate surfaces, diamond for tile, cement board, etc.
Only use saw blades recommended.

MAINTAIN TOOLS WITH CARE

Remove the battery before carrying out any adjustment, servicing or maintenance.
Keep tools sharp and clean for better and safer performance. Follow instructions for lubricating and changing accessories. Inspect tool cords periodically and if damaged, have repaired by authorized service facility. Your power tool requires no additional lubrication or maintenance. There are no user serviceable parts in your power tool. Never use water or chemical cleaners to clean your power tool. Wipe clean with a dry cloth. Always store your power tool in a dry place. Keep the motor ventilation slots clean. Keep all working controls free of dust.
If the supply cord is damaged, it must be replaced by the manufacturer, its service agent or similarly qualified persons in order to avoid a hazard.
Periodically clear dust and chips from guard and base to ensure proper performance.

For Battery tools
The ambient temperature range for the use and storage of tool and battery is 0°C-45°C.
The recommended ambient temperature range for the charging system during charging is 0°C-40°C.

TROUBLESHOOTING

Symptom	Possible Causes	Possible Solution
Tool will not start when operating the on/off switch.	Battery pack not plugged in. Battery pack is powered off. Carbon brush has worn down.	Check to make sure battery pack is connected well into a working outlet. Charging the battery. Replace the carbon brush using a qualified maintenance person.
Cutting depth is less than that is set.	Sawdust accumulated at the rear of the base.	Shake out sawdust. Consider connecting a vacuum for dust collection.
Blade spins or slips	Blade is not tightly engaged with the spindle.	Remove the blade, and reassemble it as described in **Saw Blade Assembly and Removing section**.
Blade will not cut a straight line.	Blade is dull. Blade is not mounted properly. Saw is not being guided properly.	Mount a new, sharp blade on the saw. Check that blade is properly mounted. Use a parallel guide.
Blade kicks back when beginning a cut	Blade is not spinning fast enough	Allow the saw blade to reach full speed prior to beginning a cut in the material.