# Service and Troubleshooting

## *RVS80*U

## Single Stage Variable Speed Ultra-Low NOx Gas Furnaces and Accessories

Pride and workmanship go into every product to provide our customers with quality products. It is possible, however, that during its lifetime a product may require service. Products should be serviced only by a qualified service technician who is familiar with the safety procedures required in the repair and who is equipped with the proper tools, parts, testing instruments and the appropriate service manual. **REVIEW ALL SERVICE INFORMATION IN THE APPROPRIATE SERVICE MANUAL BEFORE BEGINNING REPAIRS.**

**WARNING**

ONLY PERSONNEL THAT HAVE BEEN TRAINED TO INSTALL, ADJUST, SERVICE, MAINTENANCE OR REPAIR (HEREINAFTER, "SERVICE") THE EQUIPMENT SPECIFIED IN THIS MANUAL SHOULD SERVICE THE EQUIPMENT.

THIS EQUIPMENT IS NOT INTENDED FOR USE BY PERSONS (INCLUDING CHILDREN) WITH REDUCED PHYSICAL, SENSORY OR MENTAL CAPACITIES, OR LACK OF EXPERIENCE AND KNOWLEDGE, UNLESS THEY HAVE BEEN GIVEN SUPERVISION OR INSTRUCTION CONCERNING USE OF THE APPLIANCE BY A PERSON RESPONSIBLE FOR THEIR SAFETY.

CHILDREN SHOULD BE SUPERVISED TO ENSURE THAT THEY DO NOT PLAY WITH THE EQUIPMENT.

THE MANUFACTURER WILL NOT BE RESPONSIBLE FOR ANY INJURY OR PROPERTY DAMAGE ARISING FROM IMPROPER SUPERVISION, SERVICE OR SERVICE PROCEDURES. IF YOU SERVICE THIS UNIT, YOU ASSUME RESPONSIBILITY FOR ANY INJURY OR PROPERTY DAMAGE WHICH MAY RESULT. IN ADDITION, IN JURISDICTIONS THAT REQUIRE ONE OR MORE LICENSES TO SERVICE THE EQUIPMENT SPECIFIED IN THIS MANUAL, ONLY LICENSED PERSONNEL SHOULD SERVICE THE EQUIPMENT. IMPROPER SUPERVISION, INSTALLATION, ADJUSTMENT, SERVICING, MAINTENANCE OR REPAIR OF THE EQUIPMENT SPECIFIED IN THIS MANUAL, OR ATTEMPTING TO INSTALL, ADJUST, SERVICE OR REPAIR THE EQUIPMENT SPECIFIED IN THIS MANUAL WITHOUT PROPER SUPERVISION OR TRAINING MAY RESULT IN PRODUCT DAMAGE, PROPERTY DAMAGE, PERSONAL INJURY OR DEATH.

**WARNING**

DO NOT BYPASS SAFETY DEVICES.

TABLE OF CONTENTS


IMPORTANT INFORMATION ..... 2
PRODUCT IDENTIFICATION ..... 3
SYSTEM OPERATION ..... 5
SCHEDULED MAINTENANCE ..... 19
SERVICING ..... 21
CHECKING VOLTAGE ..... 22
CHECKING WIRING ..... 22
CHECKING THERMOSTAT, WIRING ..... 22
CHECKING TRANSFORMER AND CONTROL CIRCUIT ..... 22
CHECKING AIR CIRCULATOR BLOWER MOTOR ..... 23
CHECKING DUCT STATIC ..... 23
CHECKING TEMPERATURE RISE ..... 24
CHECKING PRIMARY LIMIT CONTROL ..... 24
CHECKING AUXILIARY LIMIT CONTROL ..... 25
INDUCED DRAFT BLOWER MOTOR ..... 25
CHECKING GAS VALVE (REDUNDANT) ..... 26
CHECKING GAS PRESSURE ..... 26
GAS MANIFOLD PRESSURE MEASUREMENT AND ADJUSTMENT ..... 27
CHECKING HOT SURFACE IGNITER ..... 28
CHECKING PRESSURE TRANSDUCER (80% ULN) 28
CHECKING FOR DELAYED IGNITION ..... 28


**WARNING**

THIS FURNACE MAY BE PAIRED WITH A COOLING UNIT THAT USES R-32 REFRIGERANT. IF THE REFRIGERATION UNIT PAIRED WITH THIS FURNACE DOES NOT USE R-32, THE R-32 FUNCTION IN THE FURNACE CONTROL BOARD NEEDS TO BE TURNED OFF. PLEASE SEE THE ELECTRICAL AND THE R-32 SECTIONS FOR MORE DETAILS. REFRIGERANT SYSTEMS OTHER THAN 410A OR R32 MAY REQUIRE AN ADDITIONAL MITIGATION CONTROL BOARD. REFER TO THE INSTALLATION MANUAL OF THE INDOOR EVAPORATOR COIL TO DETERMINE INSTALLATION REQUIREMENTS FOR THAT SUPPLIER'S REFRIGERANT DETECTION SYSTEM.


RS6621303r1
October 2025



Copyright © 2025 Daikin Comfort Technologies Manufacturing, Inc.

Amana Brand® is a registered trademark of Maytag Corporation or its related companies and is used under license. All rights reserved.

# IMPORTANT INFORMATION

CHECKING INTEGRATED IGNITION CONTROL BOARDS ..... 28
CHECKING FLAME SENSOR ..... 29
TROUBLESHOOTING CHART ..... 30
WIRING DIAGRAMS ..... 49

## IMPORTANT NOTICES

### RECOGNIZE SAFETY SYMBOLS, WORDS AND LABELS

**WARNING**

IF THE INFORMATION IN THESE INSTRUCTIONS IS NOT FOLLOWED EXACTLY, A FIRE OR EXPLOSION MAY RESULT CAUSING PROPERTY DAMAGE, PERSONAL INJURY OR LOSS OF LIFE.
- DO NOT STORE OR USE GASOLINE OR OTHER FLAMMABLE VAPORS AND LIQUIDS IN THE VICINITY OF THIS OR ANY OTHER APPLIANCE.
- WHAT TO DO IF YOU SMELL GAS:
  - DO NOT TRY TO LIGHT ANY APPLIANCE.
  - DO NOT TOUCH ANY ELECTRICAL SWITCH; DO NOT USE ANY PHONE IN YOUR BUILDING.
  - IMMEDIATELY CALL YOUR GAS SUPPLIER FROM A NEIGHBOR'S PHONE. FOLLOW THE GAS SUPPLIER'S INSTRUCTIONS.
  - IF YOU CANNOT REACH YOUR GAS SUPPLIER, CALL THE FIRE DEPARTMENT.
- INSTALLATION AND SERVICE MUST BE PERFORMED BY A QUALIFIED INSTALLER, SERVICE AGENCY OR THE GAS SUPPLIER.

**WARNING**

SHOULD OVERHEATING OCCUR OR THE GAS SUPPLY FAIL TO SHUT OFF, TURN OFF THE MANUAL GAS SHUTOFF VALVE EXTERNAL TO THE FURNACE BEFORE TURNING OFF THE ELECTRICAL SUPPLY.

**WARNING**

TO PREVENT THE RISK OF PROPERTY DAMAGE, PERSONAL INJURY, OR DEATH. DO NOT STORE COMBUSTIBLE MATERIALS OR USE GASOLINE OR OTHER FLAMMABLE LIQUIDS OR VAPORS IN THE VICINITY OF THIS APPLIANCE.

**WARNING**

HIGH VOLTAGE!
DISCONNECT ALL POWER BEFORE SERVICING OR INSTALLING THIS UNIT. MULTIPLE POWER SOURCES MAY BE PRESENT. FAILURE TO DO SO MAY CAUSE PROPERTY DAMAGE, PERSONAL INJURY OR DEATH.



**DANGER**
**PELIGRO**

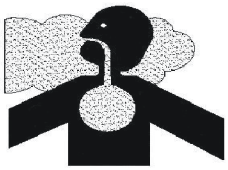

**CARBON MONOXIDE POISONING HAZARD**

Special Warning for Installation of Furnace or Air Handling Units in Enclosed Areas such as Garages, Utility Rooms or Parking Areas

Carbon monoxide producing devices (such as an automobile, space heater, gas water heater, etc.) should not be operated in enclosed areas such as unventilated garages, utility rooms or parking areas because of the danger of carbon monoxide (CO) poisoning resulting from the exhaust emissions. If a furnace or air handler is installed in an enclosed area such as a garage, utility room or parking area and a carbon monoxide producing device is operated therein, there must be adequate, direct outside ventilation.

This ventilation is necessary to avoid the danger of CO poisoning which can occur if a carbon monoxide producing device continues to operate in the enclosed area. Carbon monoxide emissions can be (re)circulated throughout the structure if the furnace or air handler is operating in any mode.

CO can cause serious illness including permanent brain damage or death. B10259-216

**RIESGO DE INTOXICACIÓN POR MONÓXIDO DE CARBONO**

Advertencia especial para la instalación de calentadores ó manejadoras de aire en áreas cerradas como estacionamientos ó cuartos de servicio.

Los equipos ó aparatos que producen monóxido de carbono (tal como automóvil, calentador de gas, calentador de agua por medio de gas, etc) no deben ser operados en áreas cerradas debido al riesgo de envenenamiento por monóxido de carbono (CO) que resulta de las emisiones de gases de combustión. Si el equipo ó aparato se opera en dichas áreas, debe existir una adecuada ventilación directa al exterior.

Esta ventilación es necesaria para evitar el peligro de envenenamiento por CO, que puede ocurrir si un dispositivo que produce monóxido de carbono sigue operando en el lugar cerrado.

Las emisiones de monóxido de carbono pueden circular a través del aparato cuando se opera en cualquier modo.

El monóxido de carbono puede causar enfermedades severas como daño cerebral permanente ó muerte. B10259-216

**RISQUE D'EMPOISONNEMENT AU MONOXYDE DE CARBONE**

Avertissement special au sujet de l'installation d'appareils de chauffage ou de traitement d'air dans des endroits clos, tets les garages, les locaux d'entretien et les stationnements.

Evitez de mettre en marche les appareils produisant du monoxyde de carbone (tels que les automobile, les appareils de chauffage autonome,etc.) dans des endroits non ventilés tels que les d'empoisonnement au monoxyde de carbone. Si vous devez faire fonctionner ces appareils dans un endroit clos, assures-vous qu'il y ait une ventilation directe provenant de l'exterier.

Cette ventilation est nécessaire pour éviter le danger d'intoxication au CO pouvant survenir si un appareil produisant du monoxyde de carbone continue de fonctionner au sein de la zone confinée.

Les émissions de monoxyde de carbone peuvent etre recircules dans les endroits clos, si l'appareil de chauffage ou de traitement d'air sont en marche.

Le monoxyde de carbone peut causer des maladies graves telles que des dommages permanents au cerveau et meme la mort. B10259-216

**WARNING**

THIS UNIT SHOULD NOT BE CONNECTED TO, OR USED IN CONJUNCTION WITH, ANY DEVICES THAT ARE NOT LISTED IN THE APPLICABLE PRODUCT SPECIFICATIONS AS ACCEPTABLE FOR USE WITH THIS UNIT OR HAVE NOT BEEN TESTED AND APPROVED BY THE MANUFACTURER. SERIOUS PROPERTY DAMAGE OR PERSONAL INJURY , REDUCED UNIT PERFORMANCE AND/OR HAZARDOUS CONDITIONS MAY RESULT FROM THE USE OF DEVICES THAT HAVE NOT BEEN APPROVED OR LISTED IN THE APPLICABLE PRODUCT SPECIFICATIONS AS ACCEPTABLE BY THE MANUFACTURER.

OUTSIDE THE U.S., **call 1-713-861-2500**.
(Not a technical assistance line for dealers.) Your telephone company will bill you for the call.

# PRODUCT IDENTIFICATION

# NOMENCLATURE

The model and manufacturing number are used for positive identification of component parts used in manufacturing. Please use these numbers when requesting service or parts information.

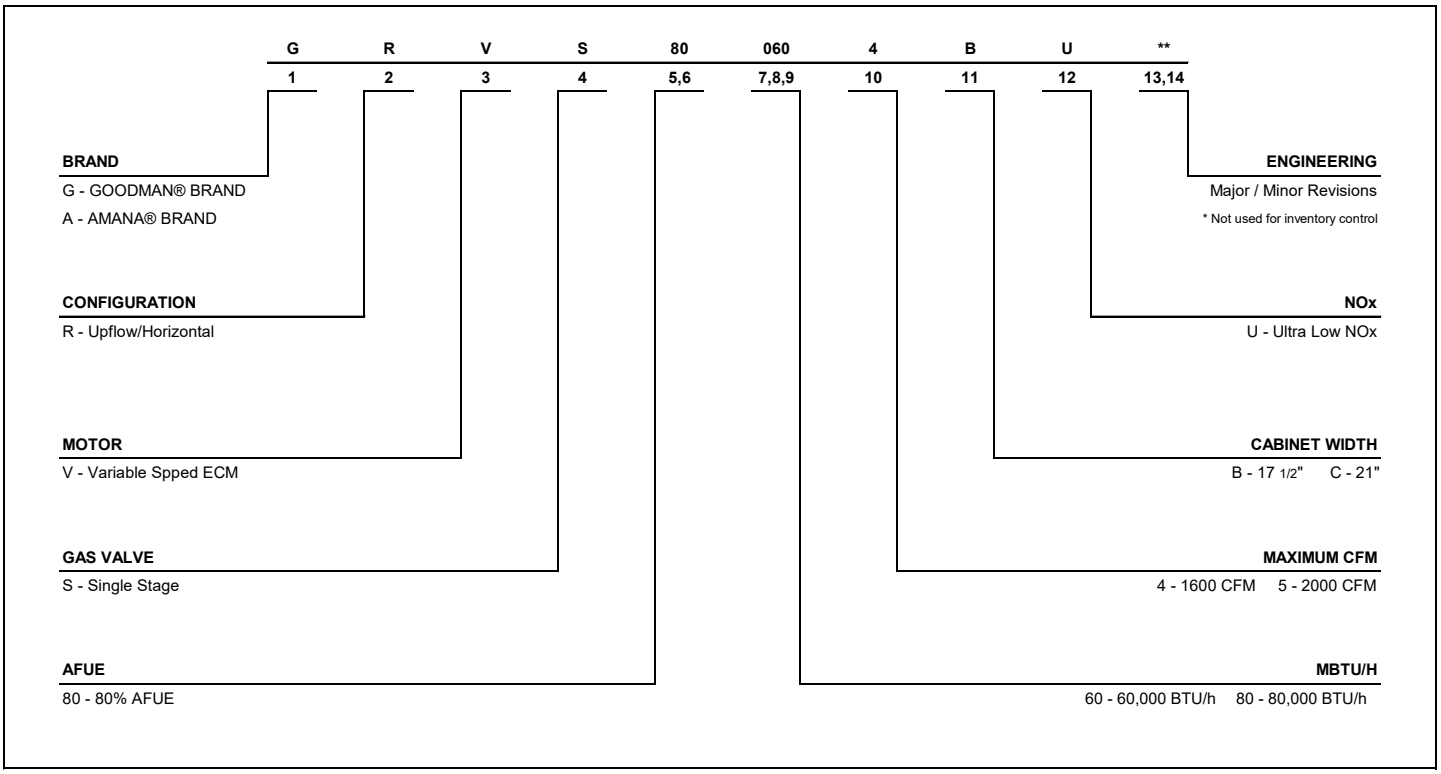

# PRODUCT IDENTIFICATION

| MODEL # | MFG # | DESCRIPTION |
|---|---|---|
| **ARVS80*U** | ARVS800604BU AA<br>ARVS800805CU AA | Amana ® Brand 80% Ultra-Low NOx Gas Furnace, Eligible for installation in California's South Coast Air Quality Management District (SCAQMD) and San Joaquin Valley Air Pollution Control District (SJVUAPCD). This furnace complies with the 14 ng/J NOx emission limit in SCAQMD Rule 1111 and SJVUAPCD Rule 4905. This furnace is eligible for the SCAQMD Clean Air Furnace Rebate Program: www.CleanAirFurnaceRebate.com. Up flow/Horizontal Left and Right, Induced Draft, Nidec variable speed ECM motor. Stainless Steel tubular heat exchanger. 120 volt silicon nitride igniter. Left or right gas entry. Line voltage EAC terminal |
| **GRVS80*U** | GRVS800604BU AA<br>GRVS800805CU AA | Goodman ® Brand 80% Ultra-Low NOx Gas Furnace, Eligible for installation in California's South Coast Air Quality Management District (SCAQMD) and San Joaquin Valley Air Pollution Control District (SJVUAPCD). This furnace complies with the 14 ng/J NOx emission limit in SCAQMD Rule 1111 and SJVUAPCD Rule 4905. This furnace is eligible for the SCAQMD Clean Air Furnace Rebate Program: www.CleanAirFurnaceRebate.com. Up flow/Horizontal Left and Right, Induced Draft, Nidec variable speed ECM motor. Stainless Steel tubular heat exchanger. 120 volt silicon nitride igniter. Left or right gas entry. Line voltage EAC terminal |

# SYSTEM OPERATION

### Safety

Please adhere to the following warnings and cautions when installing, adjusting, altering, servicing, or operating the furnace.

**WARNING**

**To prevent personal injury or death due to improper installation, adjustment, alteration, service or maintenance, refer to this manual. For additional assistance or information, consult a qualified installer, service agency or the gas supplier.**

**WARNING**

**To prevent possible property damage, personal injury or death due to electrical shock, the furnace must be located to protect the electrical components from water.**

### Charge (ESD) Precautions

**NOTE: Discharge your body's static electricity before touching unit. An electrostatic discharge can adversely affect electrical components.**

Use the following precautions during furnace installation and servicing to protect the integrated control module from damage. By putting the furnace, the control, and the person at the same electrostatic potential, these steps will help avoid exposing the integrated control module to electrostatic discharge. This procedure is applicable to both installed and uninstalled (ungrounded) furnaces.

1. Disconnect all power to the furnace. Do not touch the integrated control module or any wire connected to the control prior to discharging your body's electrostatic charge to ground.
2. Firmly touch a clean, unpainted, metal surface of the furnace near the control. Any tools held in a person's hand during grounding will be discharged.
3. Service integrated control module or connecting wiring following the discharge process in Step 2. Use caution not to recharge your body with static electricity; (i.e., do not move or shuffle your feet, do not touch ungrounded objects, etc.). If you come in contact with an ungrounded object, repeat Step 2 before touching control or wires.
4. Discharge any static electricity from your body to ground before removing a new control from its container. Follow Steps 1 through 3 if installing the control on a furnace. Return any old or new controls to their containers before touching any ungrounded object.

### Product Application

This product is designed for use as a residential home gas furnace. It is not designed or certified for use in mobile home, trailer, or recreational vehicle applications.

In the U.S.A., this furnace can be used in the following non-industrial commercial applications: Schools, Office buildings, Churches, Retail stores, Nursing homes, Hotels/ motels, Common or office areas. In all applications, the furnace must be installed per the installation instructions. GRVS80*U, ARVS80*U, furnaces are ETL certified. All *RVS80*U furnaces are built for use with Natural gas only & may not be converted for use with LP gas.

To ensure proper installation, operation and servicing, thoroughly read the installation and service manuals for specifics pertaining to the installation, servicing and application of this product.

**WARNING**

**Possible property damage, personal injury or death due to fire, explosion, smoke, soot, condensation, electrical shock or carbon monoxide may result from improper installation, repair, operation or maintenance of this product.**

**WARNING**

**To prevent property damage, personal injury or death due to fire, do not install this furnace in a mobile home, trailer, or recreational vehicle.**

To ensure proper furnace operation, install, operate, maintain and service the furnace in accordance with the installation, operation and service instructions, all local building codes and ordinances. In their absence, follow the latest edition of the National Fuel Gas Code (NFPA 54/ ANSI Z223.1), and/or CAN/CGA B149 Installation Codes, local plumbing or waste water codes, and other applicable codes.

A copy of the National Fuel Gas Code (NFPA 54/ANSI Z223.1) can be obtained from any of the following:

American National Standards Institute
25 West 43rd Street, 4th Floor
New York, NY 10036

National Fire Protection Association
1 Batterymarch Park
Quincy, MA 02169-7471

CSA International
8501 East Pleasant Valley
Cleveland, OH 44131

A copy of the CAN/CGA B149 Installation Codes can be obtained from:

CSA International
178 Rexdale Boulevard
Etobicoke, Ontario, Canada M9W, 1R3

# SYSTEM OPERATION

The rated heating capacity of the furnace should be greater than or equal to the total heat loss of the area to be heated. The total heat loss should be calculated by an approved method or in accordance with “ASHRAE Guide” or “Manual J-Load Calculations” published by the Air Conditioning Contractors of America.

**WARNING**

DO NOT OPERATE THE FURNACE WITH THE RAIN CAP REMOVED AS RECIRCULATION OF THE FLUE GASES MAY OCCUR. WATER MAY ALSO COLLECT INSIDE THE LARGER COMBUSTION AIR PIPE AND FLOW TO THE BURNER ENCLOSURE, FAILURE TO FOLLOW THIS WARNING CAN RESULT IN PROPERTY DAMAGE, EQUIPMENT DAMAGE, PERSONAL INJURY OR DEATH.

**WARNING**

IN UPRIGHT UPFLOW INSTALLATIONS, THE DRAIN TRAP MUST BE MOUNTED ON THE OPPOSITE SIDE OF THE UNIT FROM THE JUNCTION BOX. THIS WILL REDUCE THE RISK OF WATER REACHING THE JUNCTION BOX IN THE EVEN OF A BLOCKED DRAIN CONDITION. FAILURE TO FOLLOW THESE INSTRUCTIONS CAB RESULT IN POSSIBLE PROPERTY DAMAGE, PERSONAL INJURY OR DEATH DUE TO ELECTRICAL SHOCK.

### Quick Start Guide

**NOTE: THIS FURNACE IS EQUIPPED WITH A CONTROL BOARD THAT IS CAPABLE OF MONITORING FOR R-32 REFRIGERANT LEAKS IN THE INDOOR REFRIGERATION UNIT. PLEASE VERIFY THAT THE R-32 SENSOR WIRE IS PLUGGED IN TO THE FURNACE CONTROL BOARD BEFORE STARTUP, IF APPLICABLE. IF FURNACE IS NOT PAIRED WITH AN R-32 REFRIGERATION SYSTEM, THE DEFAULT SETTINGS IN THE FURNACE CONTROL BOARD WILL NEED TO BE CHANGED. PLEASE SEE THE R-32 SECTION FOR ADDITIONAL INFORMATION.**

### R-32 Function

This furnace is equipped with a control board that is capable of shutting off the gas heat and turning on the blower fan in case of an R-32 refrigerant leak in the indoor evaporator coil. If the cooling unit that is paired with this furnace does not utilize R-32 as the refrigerant, the R-32 functionalities in the furnace control board will need to be turned off for the furnace to run properly.

R-32 function on the control board is ON by default. The R-32 function can be disabled through the furnace control by entering the A2L Function Enabled menu and selecting “no”. If A2L function is disabled, the furnace control will ignore all A2L functions. If A2L function is enabled, the control will monitor the R-32 sensor information.

To enter the A2L Function Enabled menu, press the left or right button until LED displays “A2E”. Press the center button and the LED will display the selected option (yes or no). Press the left or right button to select one of the two options and press the center button to confirm the option.

### R-32 Sensor Wire Routing

**IMPORTANT NOTE: WIRING ROUTING MUST NOT INTERFERE WITH CIRCULATOR BLOWER OPERATION, FILTER REMOVAL OR ROUTINE MAINTENANCE. WIRE SHOULD NOT BE ROUTED NEAR HOT SURFACES AND SHOULD BE PROTECTED FROM SHARP EDGES. EXTRA PRECAUTION SHOULD BE TAKEN TO AVOID ROUTING NEAR THE OUTLET FLUE PIPE.**

The R-32 Sensor wire coming from the indoor evaporator coil will need to be routed into the furnace and connected to the connection point on the furnace control board. This wire should be routed alongside the thermostat wires through the low voltage openings in the left or right side of the furnace blower compartment. Please see the electrical section for the location of the R-32 Sensor connection on the control board.

The R-32 function on the furnace control board may need to be enabled or disabled if any element of the installation changes from the original setup. The specific scenario will depend on each installation, so please refer to the evaporator coil’s installation manual to verify what is required for your setup. For example, if the furnace was initially installed with an evaporator coil that utilized R-410A refrigerant, and the coil is later replaced with one that uses R-32 refrigerant, then R-32 function mode on the furnace control board must be enabled, and the R-32 sensor wire must be connected to the furnace control board.

### Furnace Start-up

During furnace start up, the furnace control will identify the connected R-32 sensor and will start monitoring the sensor communication. A green LED located next to the sensor connection will indicate if there is communication between the furnace control and the R-32 sensor. The LED will be ON during the duration of the startup and then will either start blinking or turn OFF. The blinking LED signifies that communication with the R-32 sensor is present. The LED OFF signifies that there is no signal with the sensor.

If there are no alarms or faults, the furnace will go into regular run mode after a warm up period. The furnace control monitors the R-32 sensor once per second.

### R-32 Refrigerant Leak

If the R-32 sensor on the indoor evaporator coil detects a specified concentration of R-32 refrigerant, the furnace will enter Mitigation Mode to dilute the refrigerant concentrations in case of a leak. In Mitigation Mode, the furnace will do the following:

1. Display the A2L Refrigerant Leakage error code (EAL).
2. Shut down the gas operation.
3. Energize the optional ventilation and alarm outputs.
4. Run the fan at max CFM airflow.

# SYSTEM OPERATION

Once the R-32 sensor stops detecting a leak, the fan will continue to run for 5 minutes. After the 5 minutes, if there are no other alarms or faults, the control will de-energize the optional ventilation and alarm outputs and then go back to the original operating mode per the thermostat.

### A2L Verification

The A2L Function Verification menu allows the installer to verify if the R-32 function operates properly. This menu simulates the refrigerant leak process and is only able to be used when there are no active alarms or faults. To verify the R-32 functions, enter the A2L Function Verification menu and select “YES”. To enter the A2L Function Verification menu, press the left or right switch until LED displays “A2u”. Press the center switch and the LED will display the selected option (yes or no). Press the left or right switch to select one of the two options and press the middle switch to confirm the option. Once “YES” is selected, the furnace will do the following:

1. Display the A2L Refrigerant Leakage code (EAL)
2. Shut down the gas operation
3. Energize the optional ventilation and alarm outputs.
4. Run the fan at max CFM airflow

The control will exit the verification function if:

1. The 5 minute timeout expires or
2. An alarm or fault is detected or
3. The user turns OFF the A2L Function Verification.

**NOTE: To verify gas heating operation shuts down, give furnace a call for heat before entering into A2L Function Verification.**

1. Connect all necessary thermostat wires to the thermostat connector on the furnace control (only available connections on the furnace are R & C for power, Y for Cooling Calls, W for Heating Calls, G for Fan Calls, Dehum for Dehumidification Calls. Furnace will control staging of indoor unit and outdoor unit automatically based on these inputs).
2. Make sure thermostat is set to single stage heat / single stage cool mode. When a cool call is given, 24VAC should be applied to the Y terminal (G will have 24VAC as well if a G wire is installed). When a heat call is given 24VAC should be applied to the W terminal (G may have 24VAC as well if a G wire is installed). Even if a heat pump is installed, do not setup the thermostat in heat pump mode. Single stage heat / single stage cool mode is all that is required for all applications. See rest of manual for any exceptions. Do not setup thermostat in multi stage mode either, it is not necessary.
3. For communicating 2 stage AC/HP or inverter AC/HP outdoor units, connect the 1&2 wires between the indoor and outdoor unit. It is recommended for 2 stage applications that a separate transformer be installed in the outdoor unit to provide 24VAC to the outdoor control. R&C can be used between the indoor and outdoor in 2 stage AC application but only if there isn’t already a transformer installed in the outdoor unit.
4. Turn on power to Indoor and Outdoor units
5. Charging outdoor unit: Provide a cooling call (Y or Y+G) – this initial cooling call after the power is turned on will run the outdoor unit at full capacity until the call is removed. Use this mode for charging. If system is running low stage cooling just cycle power and provide a cool call again to ensure full capacity cooling.
6. System Testing: Download the CoolCloudHVAC phone application (see pages 31 and 32)and use it to test all operations of both indoor and outdoor units.
7. Confirm thermostat heat (W or W+G) and cool (Y or Y+G) function properly and the system is turning on in the correct mode. The internal algorithms will constantly be adjusting the staging times / cooling capacities based on load changes to the space. **NOTE:** If a heat pump is installed it will be treated as a priority heat for a W call. To test gas heat only, without waiting for the system to stage between the heat pump and furnace, disconnect communications between the indoor and outdoor unit before running the heating test.

### Control System – General Information

The furnace contains internal logic to control equipment staging. An adjustable target runtime is available (range from 1 to 240 minutes) and set through the appropriate system menu. The system will constantly be adjusting staging in an effort to satisfy the thermostat call for cooling (Y only) or heating (W Only) as close to the set target runtime as possible. See information below for setting options.

Comfort Setting Menu (CFS): There are 6 options available in the Comfort Setting Menu which impacts both the System Target Runtime and Dual Fuel Operation. Dual Fuel operation adjustments only apply if a communicating heat pump is installed. Comfort Setting Options 1 – 5 have set values for the System Target Runtime and option 6 enables additional menus to customize all comfort settings. See list below for the System Target Runtimes associated with the first 5 Comfort Settings. These first 5 options are setup to help satisfy the thermostat slower or faster based on the selection where option 1, with a 10 minute Target Runtime, is attempting to satisfy much faster than option 5, with a 30 minute Target Runtime.

**System Target Runtime:**

Comfort Setting Option 1) 10 Minute System Target Runtime
Comfort Setting Option 2) 15 Minute System Target Runtime
Comfort Setting Option 3) 20 Minute System Target Runtime
Comfort Setting Option 4) 25 Minute System Target Runtime
Comfort Setting Option 5) 30 Minute System Target Runtime

# SYSTEM OPERATION

**Dual Fuel Adjustment:** This system will automatically determine if the heat pump is capable of satisfying the thermostat in the selected System Target Runtime. If the heat pump is unable to satisfy in the selected time, dual fuel settings will determine how many attempts should be given to the heat pump before temporarily locking it out and using the furnace. These dual fuel settings also determine at what time the system should remove the temporary heat pump lockout and run the heat pump again.

There are four adjustable items associated with Dual Fuel control. In the same way as the System Target Time, each of these items have defaulted values for Comfort Settings 1 – 5. Only when Comfort Setting 6 is selected will each item be available for full adjustment.

1. **Stage Up Percent (7 segment menu SUP):** This is a value that determines how far past the target runtime the system should continue running the heat pump before transitioning to the furnace. For example, assume this menu was set to 20% with a target runtime of 20 minutes. If the thermostat did not remove the heating call after 20 minutes, the system would allow for an additional 20% heat pump run (20% of the 20 minute target is an additional 4 minutes). In this case, the system would transition to gas heat after 24 minutes if the thermostat call was still present. Each time this occurs, the system records this as a strike against the heat pump (the strike is important when looking at the Over Target Threshold).
2. **Over Target Threshold (7 segment menu Ott):** If the heat pump has consecutively transitioned to gas heat for the selected Over Target Threshold amount of times, meaning for this many consecutive cycles it has been unable to satisfy the target time by itself, then the heat pump will be temporarily locked out and the furnace will become the primary heat source.
3. **Stage Down Percent (7 segment menu SdP):** This only applies when the heat pump is in a temporary lockout condition. In this case, the system will be trying to determine when the best time is to remove the lockout and run the heat pump again. To determine the best time to remove the heat pump lockout the system looks at how easily the furnace is able to satisfy the thermostat using Low Stage Gas Heat Only. Assume this setting is 15% and the target time is 20 minutes. If Low Stage Gas Heat can satisfy the thermostat in less than 17 minutes (20 minutes - 15% = 17 minutes) then the algorithm records a strike against the gas furnace (This strike is important when looking at the Under Target Threshold).
4. **Under Target Threshold (7 segment menu Utt):** If the furnace is able to satisfy the thermostat using Low Stage Gas Heat Only for the selected number of consecutive cycles the heat pump lockout will be temporarily removed. The heat pump will then be used during the next cycle. If the heat pump can satisfy the thermostat in less than the System Target Runtime the temporary heat pump hold will be completely removed and the heat pump will become the primary heat source again. if it fails to do so, the strike count against the furnace will be reset and the furnace will remain the temporary primary heat source until the Under Target Threshold is reached again.

The system will automatically make adjustments in an attempt to satisfy the thermostat as close to this target runtime as possible. After a power cycle or mode change (cooling to heating or heating to cooling) the system will run full capacity for the selected mode during the first thermostat call. Based on the selected target runtime and how long the initial cycle takes to satisfy the thermostat, the control algorithm will adjust the system stage times for a 2 stage unit or the capacity demand percentage for an inverter / modulating unit for the next cycle. NOTE: Actual runtimes may change depending on variations of load throughout the day.

**The following table shows the default values for all Comfort Setting Options (1 – 5)**

| Comfort Setting Option | Target Time (Minutes) | Stage Up Percentage (%) | Stage Down Percentage (%) | Over Target Threshhold (Strike Count) | Under Target Threshhold (Strike Count) |
|---|---|---|---|---|---|
| 1 | 10 | 20 | 20 | 2 | 10 |
| 2 | 15 | 20 | 20 | 4 | 8 |
| 3 | 20 | 20 | 20 | 6 | 6 |
| 4 | 25 | 20 | 20 | 8 | 4 |
| 5 | 30 | 20 | 20 | 10 | 2 |

The following table shows the ranges for each of item when the adjustable Comfort Setting Option 6 is selected. The table shows the minimum value, the maximum value and the defaulted value. All items can be adjusted up or down by increments of 1 which provides full flexibility for all items.

**NOTE: IT IS CRITICAL THAT THESE NUMBERS BE SET PROPERLY. IF COMFORT SETTING OPTION 3 IS DESIRED BUT A TARGET TIME OF 60 IS PREFERRED, SELECT COMFORT SETTING OPTION 6 TO ENABLE ALL THE ADJUSTABLE MENUS, SET THE TARGET TIME TO 60 AND MAKE SURE THE OTHER MENUS ARE SET TO MATCH THAT OF COMFORT SETTING OPTION 3.**

| Menu | Minimum Value | Maximum Value | Default Value |
|---|---|---|---|
| Target Time (t9t) | 1 minute | 240 minutes | 60 minutes |
| Stage Up Percent (SUP) | 0% | 100% | 20% |
| Stage Down Percent (SdP) | 0% | 100% | 20% |
| Over Target Threshold (Ott) | 1 strike | 254 strikes | 20 strikes |
| Under Target Threshold (Utt) | 1 strike | 254 strikes | 20 strikes |

### CIRCULATOR BLOWER SPEED

The Airflow quantity is displayed as a number on the three 7 segment displays, rounded to the nearest 100 CFM. The display alternates airflow amount and the system operating status.

# SYSTEM OPERATION

Each furnace has a “Maximum CFM” it is capable of providing. All fan operations (Constant CFM, Cooling Airflow Profiles, Low and High Stage gas heat airflow, outdoor Air Conditioner / Heat Pump Airflow, etc.) are based off of multipliers which are percentages of this maximum CFM. Max CFM is as follows:

3 Ton Models 1400 CFM
4 Ton Models 1760 CFM
5 Ton Models 2200 CFM

**Setup Furnace Airflow:** Adjust the Gas Heating Airflow menu (gAF) setting to the desired percentage of maximum airflow. In most cases the default gas heat airflow will provide a temperature rise near the middle of the acceptable range. High Stage CFM can be calculated by the following equation: CFM = Max CFM * Selected Heating Airfow Percentage.

**For Communicating Outdoor Units:** Main airflow adjustment is not required. The Outdoor unit will determine the appropriate amount of indoor airflow to request. Airflow Trims can be made if desired.

For Non-Communicating outdoor units, determine the proper airflow (based off tonnage of) the outdoor unit. Most cooling systems are designed to work with airflow between 350 and 450 CFM per ton. 400 CFM/TON is the industry standard. Once desired airflow has been determined, see Tonnage / Airflow table to identify the Tonnage Selection that is closest to the desired airflow. This table is based on 400 CFM per ton where Airflow = (400 CFM) x (Selected Tonnage).

**EXAMPLE:** If 1520 CFM is the desired airflow the Tonnage Selection that matches this is 3.8.

Enter the Tonnage (ton) menu either by using the on board push buttons or phone application and select the Tonnage Selection you identified. **NOTE:** Trim is also available if additional adjustment is required.

| Tonnage Selection | Airflow | Tonnage Selection | Airflow | Tonnage Selection | Airflow | Tonnage Selection | Airflow |
|---|---|---|---|---|---|---|---|
| 1 | 400 | 2.3 | 920 | 3.6 | 1440 | 4.9 | 1960 |
| 1.1 | 440 | 2.4 | 960 | 3.7 | 1480 | 5 | 2000 |
| 1.2 | 480 | 2.5 | 1000 | 3.8 | 1520 | 5.1 | 2040 |
| 1.3 | 520 | 2.6 | 1040 | 3.9 | 1560 | 5.2 | 2080 |
| 1.4 | 560 | 2.7 | 1080 | 4 | 1600 | 5.3 | 2120 |
| 1.5 | 600 | 2.8 | 1120 | 4.1 | 1640 | 5.4 | 2160 |
| 1.6 | 640 | 2.9 | 1160 | 4.2 | 1680 | 5.5 | 2200 |
| 1.7 | 680 | 3 | 1200 | 4.3 | 1720 | 5.6 | 2240 |
| 1.8 | 720 | 3.1 | 1240 | 4.4 | 1760 | 5.7 | 2280 |
| 1.9 | 760 | 3.2 | 1280 | 4.5 | 1800 | 5.8 | 2320 |
| 2 | 800 | 3.3 | 1320 | 4.6 | 1840 | 5.9 | 2360 |
| 2.1 | 840 | 3.4 | 1360 | 4.7 | 1880 | 6 | 2400 |
| 2.2 | 880 | 3.5 | 1400 | 4.8 | 1920 | | |

### Cooling Airflow Ramping Profiles

The multi-circulator blower also offers several custom ON/ OFF ramping profiles. These profiles may be used to enhance cooling performance and increase comfort level. The ramping profiles are selected using the Cooling Airflow Profile menu (if push buttons are used, use the CAP menu to select the desired profile). Refer to the bullet points below for a description of each ramping profile.

- **Profile A(1)** provides only an OFF delay of one (1) minute at 100% of the cooling demand

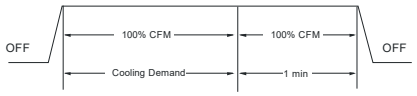


- **Profile B(2)** ramps up to full cooling demand airflow by first stepping up to 50% of the full demand for 30 seconds. The motor then ramps to 100% of the required airflow. A one (1) minute OFF delay at 100% of the cooling airflow is provided.

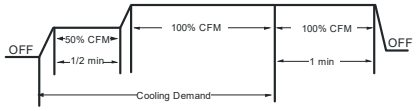


- **Profile C(3)** ramps up to 85% of the full cooling demand airflow and operates there for approximately 7 1/2 minutes. The motor then steps up to the full demand airflow. Profile C also has a one (1) minute 100% OFF delay.

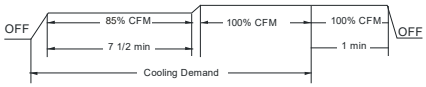


- **Profile D(4 or 5)** ramps up to 50% of the demand for 1/2 minute, then ramps to 85% of the full cooling demand airflow and operates there for approximately 7 1/2 minutes. The motor then steps up to the full demand airflow. Profile D has a 1/2 minute at 50% airflow OFF delay.

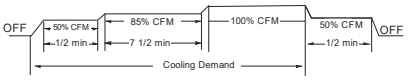


In general lower heating speeds will: reduce electrical consumption, lower operating sound levels of the blower, and increase the outlet air temperature delivered to the home if heatmode is running. If cooling mode is running the same airflow adjustment will decrease the outlet air temperature delivered to the home. The speeds available allow the blower performance to be optimized for the particular homeowner’s needs.

### Low Voltage Wiring - General Information

The Furnace functions with any thermostat that can be configured to provide 24VAC on Y for cooling calls and 24VAC on W for Heating calls. Based on these simple inputs, internal algorithms will decide how to control two stages of furnace heat in addition to any single or multi stage outdoor heating / cooling operation (the algorithms will handle dual fuel multi-stage systems as well). The thermostat must be setup to provide only a Y call when cooling is required and only a W call when heating is required. This is generally accomplished by selecting single stage heat / single stage cool mode during setup (if setup is required). Do not set thermostat to heat pump operation as system will not operate properly.

**NOTE: The only exception is if a single stage non-communicating Heat Pump is connected to the furnace. Refer to Non-Communicating Single Stage Heat Pump diagram for details.**

# SYSTEM OPERATION

Thermostat connections to the control board are R, C, G, W, Y & Dehum. Provided the thermostat does not require a common wire as few as two thermostat wires may be used for heat only (R and W) or cool only (R and Y) systems. A minimum three thermostat wires may be used for heating and cooling systems (R, W and Y). Refer to thermostat wiring diagrams below for your system configuration.
Low voltage connections can be made through either the right or left side panel of the furnace. Thermostat wiring entrance holes are located in the blower compartment.

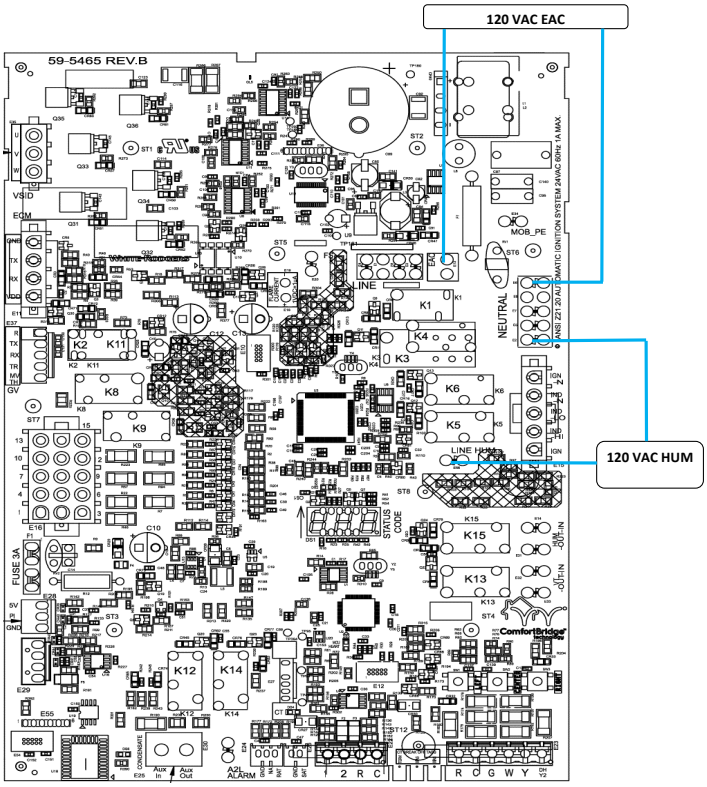


**120 VAC Accessories - Accessories Wiring**
**Figure 1**

### Low Voltage Ventilation

The Ventilation connections provide dry contact for field ventilator wiring connections. These connections are normally open and energize during the R-32 fault/alarm condition. A VT IN and a VT OUT connectors are provided and are shown in the image below.

### Low Voltage A2L Alarm

The A2L alarm connection provides 24VAC for field alarm wiring connections. These connections are normally open and energize during the R-32 fault/alarm condition. An A2L Alarm connector is provided and is shown in the image below.

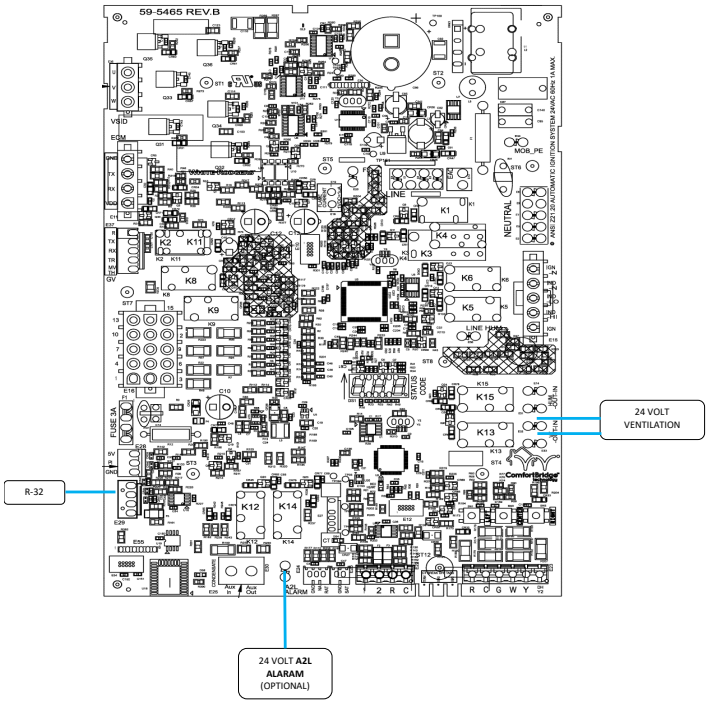


**24 VAC Accessories - Accessories Wiring**
**Figure 2**

For gas heat only operations (no outdoor unit installed) the thermostat must be setup to provide a single stage W call when heating is required. See Gas Heat Only wiring diagram for wiring instructions.

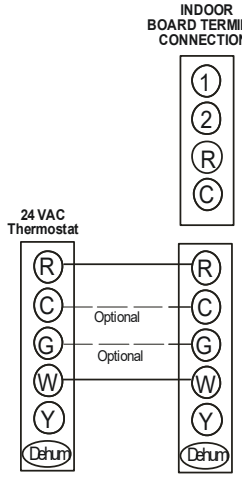


**Gas Heat Only**
**Figure 3**

### Low Voltage Wiring-Communicating Outdoor Unit

Internal logic will control staging of all multi stage equipment (2 stage AC/HP units and Inverter AC/HP units). The thermostat is only required to provide a single stage heat / cool call and fan or dehumidification call during operation.

# SYSTEM OPERATION

Two wires are required between the indoor unit and outdoor unit on the 1 and 2 terminals. It is recommended to install a separate transformer with all 2 stage outdoor units to reduce the power draw on the indoor transformer.
4 wires (R,C for power and 1, 2 for communications) can be used for AC applications. See wiring images for details. Do not connect R & C between the indoor unit and the outdoor unit if there is already a transformer installed in the outdoor unit providing 24VAC to the outdoor control. In this case, just use 1 and 2 terminals for communications.

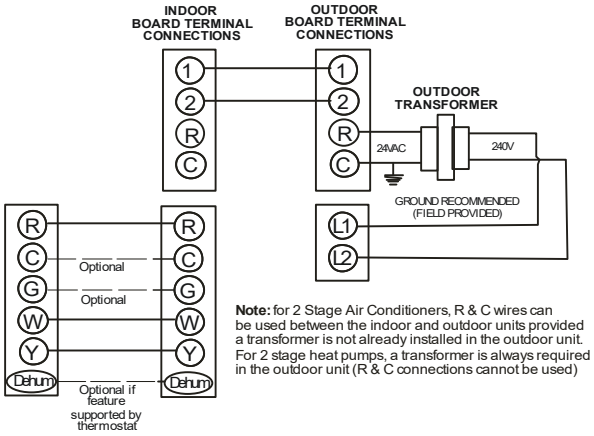


**Communicating Two Stage Air Conditioner or Heat Pump**
**Figure 4**

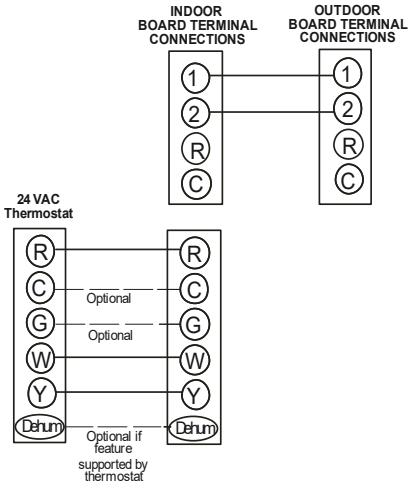


**Communicating Inverter Air Conditioner or Heat Pump**
**Figure 5**

## Low Voltage Wiring-Non-Communicating Outdoor Unit

When using the furnace with a single stage non-communicating air conditioner or heat pump use the wiring methods shown. When using a single stage air conditioner, the thermostat must be setup for single stage heating and single stage cooling mode. When using a single stage heat pump, the thermostat must be setup for dual fuel operation where the reversing valve is energized in cooling mode (see Non-Communicating Single Stage Heat Pump wiring diagram). In both cases airflow must be selected using the tonnage menu where Airflow = (400 CFM) x (Selected Tonnage). Tonnage values range from 1 to 6 in 0.1 increments.

**NOTE: Airflow will not go above the system Max CFM. If the tonnage value selected generates an airflow value above the Max CFM, the system will cap this value and not provide any more airflow than the Max CFM.**

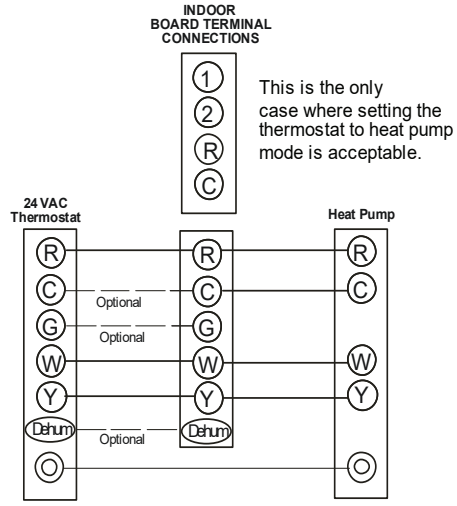


**Non-Communicating Single Stage Heat Pump**
**Figure 6**

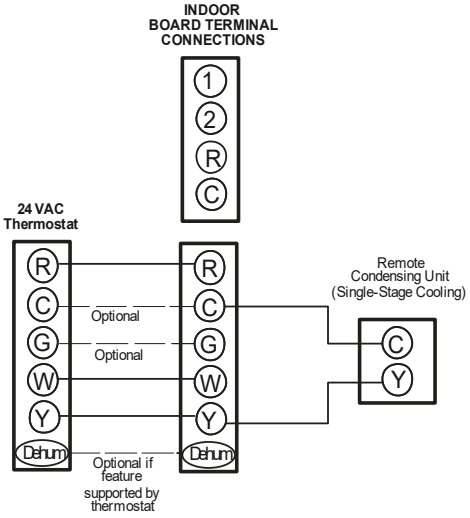


**Non-Communicating Single Stage A/C**
**Figure 7**

## Dehumidification

The control board is equipped with a 24 volt dehum input in the thermostat wiring connector to be used with a thermostat or dehumidistat. Dehumidification mode allows the air handler's circulator blower to operate at a slightly lower speed (85% of calculated speed) during a combined thermostat call for cooling and thermostat call for dehumidification or dehumidistat call for dehumidification. This lower blower speed enhances dehumidification of the conditioned air as it passes through the AC coil. If using the dehum input with a thermostat, configure the thermostat to energize this terminal when dehumidification is desired. If using an external dehumidistat, connect it between the R and Dehum terminals. The dehumidistat must operate on 24 VAC and utilize a switch which closes on humidity rise. Refer to the low voltage wiring diagrams for additional wiring details.

# SYSTEM OPERATION

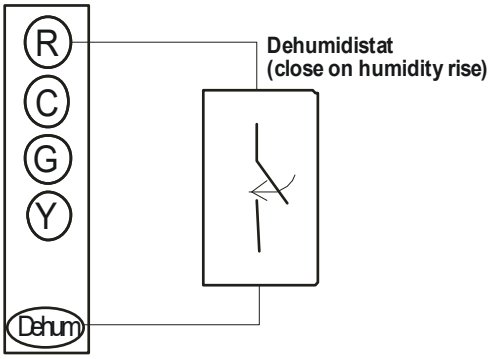


**Dehumidistat (Close on Humidity Rise)**
**Figure 8**

### Fossil Fuel Applications

This furnace can be used in conjunction with a heat pump in a fossil fuel application. A fossil fuel application refers to a combined gas furnace and heat pump installation which uses an outdoor temperature sensor to determine when to run the heat pump or gas furnace.

For non-communicating single stage heat pump installations a fossil fuel kit can be used. Follow the wiring guidelines in the fossil fuel kit installation instructions. All furnace connections must be made to the furnace integrated control module and the “FURNACE” terminal strip on the fossil fuel control board.

For Fossil Fuel systems the heat pump is given priority when a compressor balance point lockout condition is not present. Transitions from primary heat pump heating to backup gas heating will result in full capacity operation during the first thermostat call. The furnace PCB algorithms will then continuously adjust the stage times or the percent capacity after the initial call in an attempt to satisfy the thermostat at the target runtime.

**Automatic Fossil Fuel Adjustment:** If both compressor balance point and backup heat balance point lockouts are not present, the furnace algorithms will determine if the heat pump is capable of satisfying the thermostat in the selected target runtime. If the heat pump is not capable of this it will be locked out until the furnace can satisfy the thermostat, under the target runtime, while running completely in low stage. At that point, an attempt will be given to the heat pump and a decision made to keep using gas heat or to transition back to the heat pump.

### 120 Volt Line Connection of Electronic Air Cleaner

**WARNING**

**High Voltage!**
**Disconnect all power before servicing or installing this unit. Multiple power sources may be present. Failure to do so may cause property damage, personal injury or death.**

The accessory load specifications are as follows:

| | |
|---|---|
| EAC | 1.0 Amp maximum at 120 VAC |

The furnace integrated control module is equipped with a line voltage accessory terminal for controlling power to an optional field supplied electronic air cleaner or any device required to operate in parallel with a circulating fan demand.

To connect an electronic air cleaner using the line voltage EAC terminal:

- Turn OFF power to the furnace before installing any accessories.
- Follow the air cleaner manufacturers’ instructions for locating, mounting, grounding, and controlling accessories. Utilize 1/4” quick connect terminals to make accessory wiring connections to the furnace integrated control module.
- Connect the hot terminal utilized for accessory operation to the EAC terminal and the neutral side of power to NEUTRAL bus on the integrated furnace control or the neutral connection in the furnace junction box.
- All field wiring must conform to applicable codes.
- Connections should be made as shown.
- If it is necessary for the installer to supply additional line voltage wiring to the inside of the furnace, the wiring must conform to all local codes, and have a minimum temperature rating of 105°C.
- All line voltage wire splices must be made inside the furnace junction box.

### Auxiliary Alarm Switch:

The control is equipped with a 24VAC Aux Alarm to be used for a condensate switch install (designated by “Condensate” on the control). These contacts could also be used with compatible $CO_2$ sensors or Fire Alarms. By default, an AUX switch is normally closed and opens when the water level in the evaporator coil base pan reaches an undesirable level. The control will respond by turning off the outdoor condensing unit and display EEd. If the AUX switch is detected closed for 30 seconds, normal operation resumes and error messages are no longer displayed.

# SYSTEM OPERATION

## Dehumidification Control Options

**Key Mitigations:**

1. Full featured TS (dehum & overcool)
2. Connect G and dehum wire correctly
3. Dehumidistat

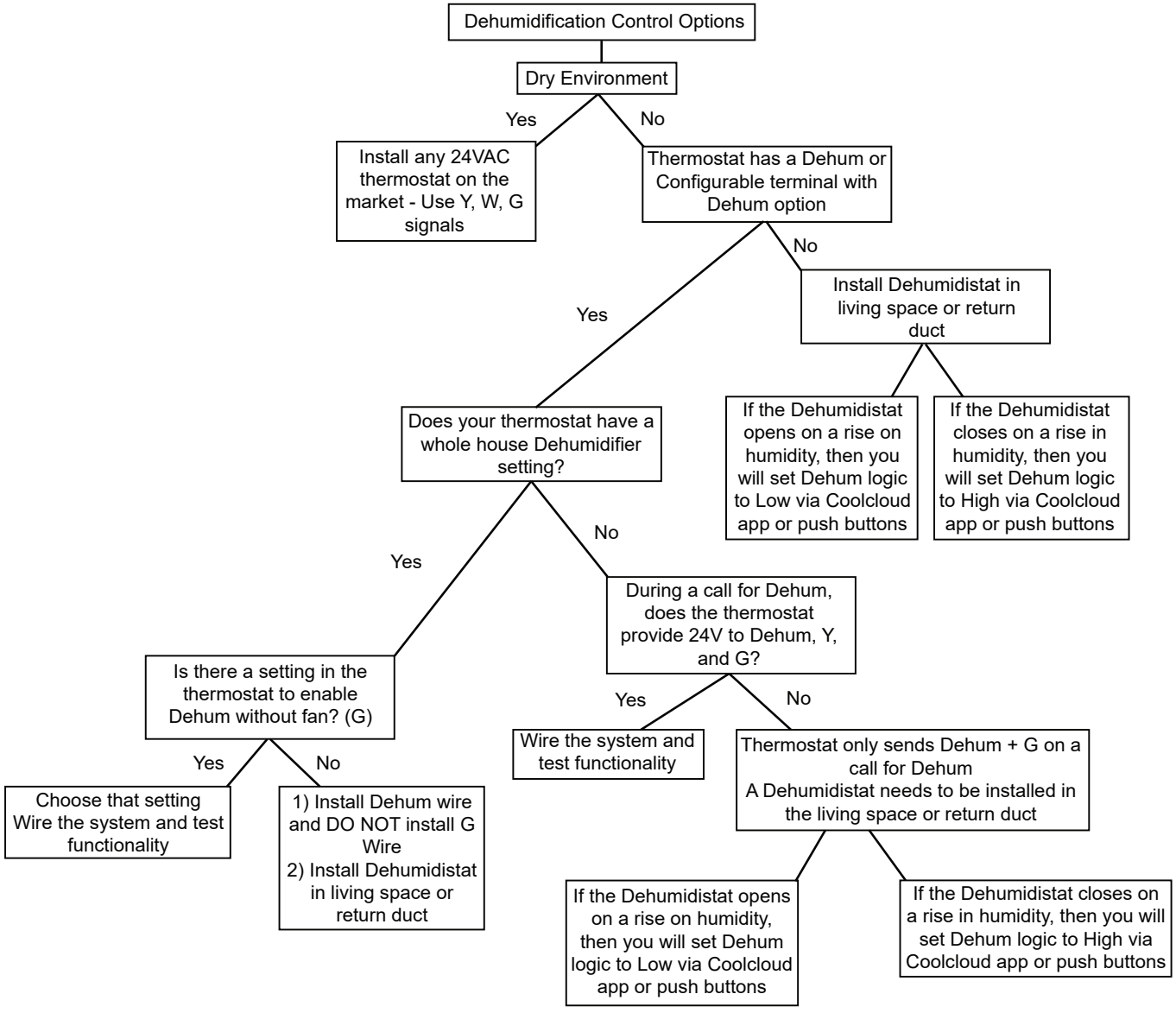

# SYSTEM OPERATION

## CoolCloudHVAC Phone Application – General Information

### Examples of CoolCloud HVAC Phone Application Screens

**NOTE: Actual screen may look different based on the device being used.**

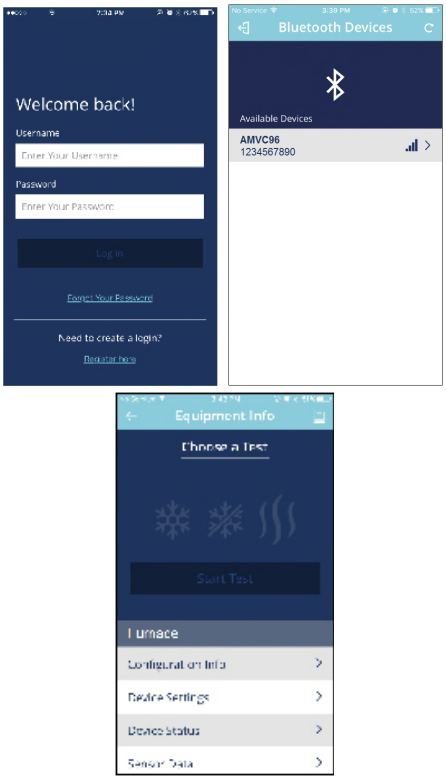


This furnace is Bluetooth® ready and functions with a custom phone application designed to improve the setup / diagnostic experience of the installing contractor. Users can see specific model information, review active diagnostic error codes, observe system status during operation, make system menu adjustments such as the target runtime, add site visit notes and run system testing of all operational modes (heat / cool / fan) directly from the phone. The phone application is also capable of directly updating the furnace software anytime updates are available (the application will automatically notify the user if updates are available). Software update time could take approximately 15 minutes to complete. The phone must remain within Bluetooth range for only the download step of an update. The user will be notified once the download is completed and installation begins. At this time the phone can be removed from the Bluetooth range if necessary (**NOTE:** if the phone is out of range, the user will not know when the installation has completed or what the existing status of the installation is).

*The Bluetooth® word mark and logos are registered trademarks owned by Bluetooth SIG, Inc., and any use of such marks are under license.*

Download the CoolCloud Phone Application and create an account to get started. A Wi-Fi/Cellular connection will be required for account setup.

### Connecting Phone Application to Furnace

When in close proximity to the furnace, the phone application will detect the Bluetooth Network being broadcasted by the system. Once the Bluetooth network is selected by the user, due to security reasons, the user will be prompted for a 3 digit access code before system information can be displayed. The 3 digit code will be displayed on the three seven segment displays of the furnace control board. A sightglass is located close to the control board that can be used to see these digits. The user must enter the access code into the phone application when prompted to do so in order to gain access to system information. 3 failed entry attempts will result in a new code being displayed on the control. If all 3 digits are not visible from the sight glass, the user has two options to connect.

**Option 1)** Perform thermostat task as instructed by the phone application to gain access. The following steps will explain what this task involves.

- **Step 1**, ensure the thermostat is in an idol state (no cool, heat or fan calls). To do this, set the thermostat fan mode to Auto (not ON) and then remove any active heat / cool calls. This task needs to be completed within 5 minutes of the process beginning.
- **Step 2**, provide any 24VAC call to the control from the thermostat (cooling, heating or fan will work). This task must occur within 8 minutes after the Step 1 is complete.
- **Step 3**, remove the call that was provided during Step 2. This task must be completed within 1 minute after the call is provided during Step 2.

If the phone remains within Bluetooth range during the three steps, the user will be notified when each step has been completed and informed about what to do next. If the user is not within Bluetooth range during this process the phone application will still provide instruction about what tasks to complete. After all 3 steps have successfully been completed, the user will have access to system information once in range.

**Option 2)** Remove the furnace door, ensure the control has power and then read the 3 digits. The code will temporarily remain active after a power cycle so the door can put back on before making the connection if desirable. **NOTE**: power will be cycled to the control board with this option. If it is not desirable to cycle power to the unit for diagnostic purposes Option 1 may be a better method to connect.

At power-up, the furnace control will display the unit address (a two digit number) on the 2nd and 3rd characters of the three seven segment displays. After the furnace control has completed its' internal start-up routine, the furnace control will display the Status Menu.

# SYSTEM OPERATION

The control board will display “Id L” while in idle (stand-by) mode waiting for a call from the thermostat. The furnace control is now ready to receive inputs from the room thermostat.

The furnace control board will detect any compatible communicating outdoor unit connected to it. Items that appear in the main menu will vary accordingly. Example, you will not see heat pump specific menus unless a compatible heat pump is detected by the furnace control.

### Push Buttons




Three push-buttons on the control board may be used to navigate menus and select options. The three buttons are labeled Left, Center and Right. The center button is used to enter into the option menu and make the selection, the left and right buttons are used to browse the main menu and option menus. When the center button is pressed in the main menu, the furnace control will go to the option menu and display the default or previously-selected option. Pressing the left or right button will display the next available option. When the next adjustable or selectable option is displayed, the furnace control will flash the option with ½ second ON and ½ second OFF indicating the option has not yet been selected.

To select an option; press and release the center button to stop the current option from flashing. When the option has stopped flashing, press the center button again to select that option.

While navigating through options; If no buttons are pressed during a 30 second time period, the display will time-out and return to the Status Menu. Simultaneously pressing & releasing any two buttons will also return the furnace control back to the Status Menu. If the previously displayed option was not selected and a timeout occurs, the displayed option will not be stored in control memory as a selected option.

**The Status Menu includes the following items:**

- The operation mode
- Blower CFM (if blower is running)
- Humidification/Dehumidification mode (if active)
- Ventilator operation (if active)
- Any active fault codes

**Menu items will appear in rotation as follows:**

- Each item is ON for 2 seconds
- OFF for 1 second
- Then to the next item

**Example of Menu Navigation & Option Change**

This is an example for how to use the push buttons to make a change to the constant fan speed.

### Cool Cloud HVAC Phone Application

1. When looking at the Furnace Control, the three 7 Segment displays (located just above the push buttons) will be displaying system status. System status includes the current modes of operation, airflow and any active error codes.

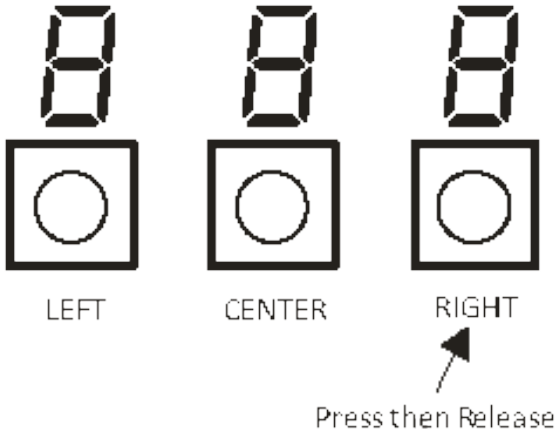


2. Press and release the Right Button (This will cycle through the menus in one direction. Pressing the Left Button would cycle through the menus in the opposite direction. For this example, the right button will be used).
3. The screen will now display Menu F10 (Last 10 Faults).

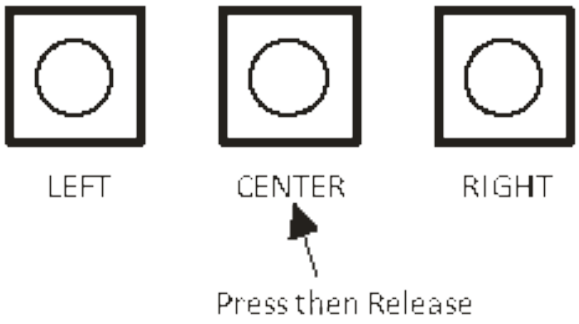


4. Press and release the Center Button. The center button is used to enter menus and make selections within menus.
5. What will be displayed is the currently selected fan only percentage. For this example the assumption is that this currently selected fan only percentage is 25% and changing this to 45% is the objective.
6. Press and Release the Right button. The screen will change to 35 and start flashing. The flashing indicates the displayed option has not been selected yet.
7. Press and Release the Right button again. The 7 segment displays will continue flashing but will now display 45.

## SYSTEM OPERATION

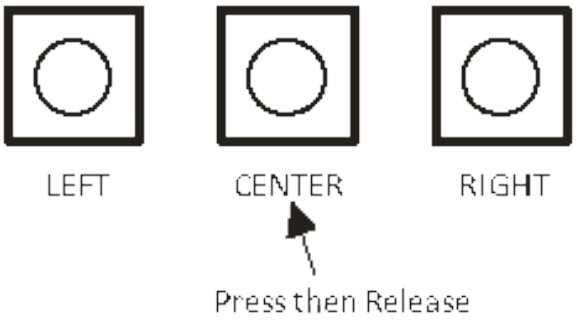


8. Press and Release the Center Button again. The 45 being displayed will stop flashing. To then complete the selection process and make 45 the official fan only setting Press and Release the Center Button for the last time. This final step will jump the user back to the main menu list and FSd will be displayed again.
9. The constant fan multiplier has now been changed from 25 to 45.

**Airflow Display**
When the blower is running the CFM will be displayed in Status Menu. The first 7 segment character will display "A". The second & third characters will display the actual CFM divided by 100. The actual CFM will display rounded up or down to the nearest 100 CFM as follows:

- 550 to 649 CFM display as "A06"
- 1150 to 1249 CFM display as "A12"

**Alarm Display**
If an active alarm is present, the alarm code shall be reported in Status Menu starting with "E" and following with the appropriate two digit alarm code.

**Clearing Faults**
While in the Last 10 Faults option menu, push & hold the center button for 5 seconds. This will clear all non-active alarm(s) in the Last 10 Faults menu. The display will flash three times to confirm faults have been cleared.

**Learn Menu**
Using this option resets the communicating network which will cause the furnace to discover what devices are present on ClimateTalk™ network. This menu will not appear when the furnace control is connected to a Non-Comm OD unit.

**Code Release Number Menu**
This is a reference only menu to display the firmware release revision numbers for each micro-controller.

**Constant Fan Speed Menu**
This menu allows for adjustment of the multiplier for constant fan operation in 10% increments. Each furnace has a "Maximum CFM" determined by motor HP. All fan operations are based off of multipliers which are percentages of this number. Max CFM is shown below. The default constant fan multiplier is 25%.

| Model | Max CFM |
|---|---|
| 3 Ton Models | 1400 |
| 4 Ton Models | 1760 |
| 5 Ton Models | 2200 |

**Gas Heat Airflow Multiplier Menu**
The menu is used to change the gas heat airflow multiplier for gas heat operation. In most cases the default gas heat airflow will provide a temperature rise near the middle of the acceptable range. The multiplier will be expressed by the 2nd & 3rd characters of the display as a percentage of max CFM.

**Gas Heat Fan Off Delay Menu**
The default setting is 90 seconds. The available adjustment range is from 30 to 180 seconds in 30 second increments.

**Gas Heat Fan On Delay Menu**
The default setting is 30 seconds. The available adjustment range is from 5 to 30 seconds in 5 second increments.

**Gas Heat Trim Factor Option Menu**
Gas Heat airflow may be trimmed from -10% to +10% in 2% increments.

**Gas Heat Stage Multiplier Menu (CFM)**
This menu allows adjustment of the low fire CFM multiplier. The default CFM for low fire is 70% of high fire.

**Gas Pressure Test Menu**
This menu allows 100% firing rate be locked in to check gas valve pressure.

**CAUTION**

**TO PREVENT UNRELIABLE OPERATION OR EQUIPMENT DAMAGE, THE INLET GAS SUPPLY PRESSURE MUST BE AS SPECIFIED ON THE UNIT RATING PLATE WITH ALL OTHER HOUSEHOLD GAS FIRED APPLIANCES OPERATING.**

| INLET GAS SUPPLY PRESSURE | | |
|---|---|---|
| **Natural Gas** | Minimum: 4.5" w.c. | Maximum: 10.0" w.c. |

## NORMAL SEQUENCE OF OPERATION

**POWER UP**

- 120 VAC power applied to furnace.
- Integrated ignition control performs internal checks.
- The control board will display I D L. awaiting a call from the thermostat.
- Integrated ignition control monitors safety circuit continuously.
- Furnace awaits call from thermostat.

# SYSTEM OPERATION

### Heating Mode

The normal operational sequence in heating mode is as follows:

- R and W thermostat contacts close, initiating a call for heat.
- Integrated control module performs safety circuit checks.
- **Pressure Sensor Verification:** The control operates the inducer in a manner to verify the pressure sensor null value and span operation are within specification. If the system is operating correctly, this test takes only a few seconds. If the system is not functioning properly, the control times out after a maximum 90 seconds and display the proper fault code.
- Induced draft blower is energized for 30 second prepurge.
- Igniter warm up begins after 30 second prepurge expires.
- Gas valves open at end of igniter warm up period, delivering gas to burners and establishing flame.
- Integrated control module monitors flame presence. Gas valve will remain open only if flame is detected.
- Circulator blower is energized on high heat speed following a fixed 30 second blower on delay. Electronic air cleaner terminal is energized with circulator blower.
- Furnace operates; integrated control module monitors safety circuits continuously.
- R and W thermostat contacts open, completing the call for heat.
- Gas valve closes, extinguishing flame.
- Induced draft blower is de-energized following a thirty second post purge.
- Circulator blower continues running for selected heat off delay period factory set at 120 seconds. If required this can be changed in the field.
- Electronic air cleaner is de-energized.
- Furnace awaits the next call from thermostat.

### Cooling Mode

The normal operational sequence in cooling mode is as follows:

- R, Y and G thermostat contacts close, initiating a call for cool.
- Integrated control module performs safety circuit checks.
- Outdoor fan and compressor are energized.
- Circulator blower is energized on cool speed following a fixed six second on delay. If required this can be changed in the field to 45 seconds. Electronic air cleaner terminal is energized with circulator blower.
- Furnace circulator blower and outdoor cooling unit run, integrated control module monitors safety circuits continuously.
- R, Y and G thermostat contacts open, completing the call for cool.
- Outdoor fan and compressor are de-energized.
- Circulator blower is de-energized following a fixed forty five second cool off delay period. Electronic air cleaner terminal is de-energized.
- Furnace awaits the next call from thermostat.

### Fan Only Mode

The normal operational sequence in Fan Only Mode is as follows:

- R and G thermostat contacts close, initiating a call for fan.
- Integrated control module performs safety circuit checks.
- Circulator blower is energized on low heat speed. Electronic air cleaner terminal is energized.
- Circulator blower runs, integrated control module monitors safety circuits continuously.

### Combustion Quality

Combustion quality can be affected by several factors. Major factors are venting and draining.

### Other Causes

1. Manifold Gas Pressure must be set within the range stated on the furnace rating plate.
2. Remove Draft Inducer, Check the integrity of the gasket between the inducer and the collector box cover, any air leak here will have a negative effect on combustion. Check the orifice hole in the collector box, it must be free of burrs on both sides.
3. Make sure the field installed gas line is not binding and causing distortion of burner assembly
4. Make sure there are no cabinet air leaks allowing supply air to affect combustion
5. If heat exchanger integrity is uncertain, follow procedures in Service Bulletin SF-041.

# SCHEDULED MAINTENANCE

**WARNING**

**High Voltage!**
**Disconnect all power before servicing or installing this unit. Multiple power sources may be present. Failure to do so may cause property damage, personal injury or death.**



**CAUTION**

**If you must handle the ignitor, handler with care. Touching th ignitor body with bare fingers, rough handling, or vibration could result in early ignitor failure. Only a qualified servicer should ever handle the ignitor.**

## ANNUAL INSPECTION

The furnace should be inspected by a qualified installer, or service agency at least once per year. This check should be performed at the beginning of the heating season. This will ensure that all furnace components are in proper working order and that the heating system functions appropriately. Pay particular attention to the following items. Repair or service as necessary.

- Flue pipe system. Check for blockage and/or leakage. Check the outside termination and the connections at and internal to the furnace.
- Heat exchanger. Check for corrosion and/or buildup within the heat exchanger passageways.
- Burners. Check for proper ignition and flame sense.
- Wiring. Verify that electrical connections are tight and free from corrosion.
- Filters.
- R-32 Sensor Wire. Check R-32 sensor wire connection for tightness and check wire for damage.

## AIR FILTER

**WARNING**

**Never operate furnace without a filter installed as dust and lint will build up on internal parts resulting in loss of efficiency, equipment damage, and possible fire.**

Filters must be used with this furnace. Filters do not ship with these furnaces but must be provided by the installer for proper furnace operation.

Dirty filters are the most common cause of inadequate heating or cooling performance.

**WARNING**

**High Voltage!**
**Disconnect all power before servicing or installing this unit. Multiple power sources may be present. Failure to do so may cause property damage, personal injury or death.**



## MAINTENANCE

Improper filter maintenance is the most common cause of inadequate heating or cooling performance. Filters should be cleaned (permanent) or replaced (disposable) every two months or as required.

## HORIZONTAL UNIT FILTER REMOVAL

Filters in horizontal installations are located in the central return register.

## INDUCED DRAFT AND CIRCULATION BLOWERS

The bearings in the induced draft blower and circulator blower motors are permanently lubricated by the manufacturer. No further lubrication is required. Check motor windings for accumulation of dust which may cause overheating. Clean as necessary.

## FLAME SENSOR (QUALIFIED SERVICER ONLY)

Under some conditions, the fuel or air supply can create a nearly invisible coating on the flame sensor. This coating acts as an insulator, causing a drop in the flame sensing signal. If this occurs, a qualified servicer must carefully clean the flame sensor with steel wool. After cleaning, the flame sensor output should be as listed on the specification sheet.

The following is a must for every service technician and service shop.

1. Thermometers or thermocouple meter (optional) - To measure temperatures.
2. Multi-Meter - To measure amperage and voltage, to test continuity, capacitors, and motor windings.
3. Manometer - To measure static pressure, pressure drop across coils, filters and draft, and to measure inlet and manifold gas pressures.

Other recording type instruments can be essential in solving abnormal problems, however, in many instances they may be rented from local sources.

Proper equipment promotes faster, more efficient service and accurate repairs resulting in fewer call backs.

## HEATING PERFORMANCE TEST

Before attempting to diagnose an operating fault code, run a Heating Performance Test to determine if the heating system is performing within 5% of the BTU input found on the rating plate of the unit being tested. To conduct a heating performance test, the BTU input to the unit must be calculated (see Clocking a Gas Meter). Before clocking a gas meter, contact your local utility to provide the caloric value (BTU content) of the natural gas in the area.
It is also important to confirm the airflow (CFM) is within the temperature rise range (see Airflow Data in spec sheet) and external static pressure range (approximately 0.5" water column). How-to instructions can be found in the service manual under Checking External Static Pressure and Checking Temperature Rise.

# SCHEDULED MAINTENANCE

## CLOCKING A GAS METER

1. Turn off all gas appliances in the home.
2. Turn on the furnace. Ensure the furnace is operating at a 100% firing rate on 2 stage and modulating furnace product.
3. Once heating cycle is at a steady state (typically 15 minutes of operation), use a stopwatch to time how long it takes the smallest unit of measure dial on the gas meter to make a full revolution. In Table 1, one cubic foot is selected. The smallest unit of measure will vary depending on the gas meter.

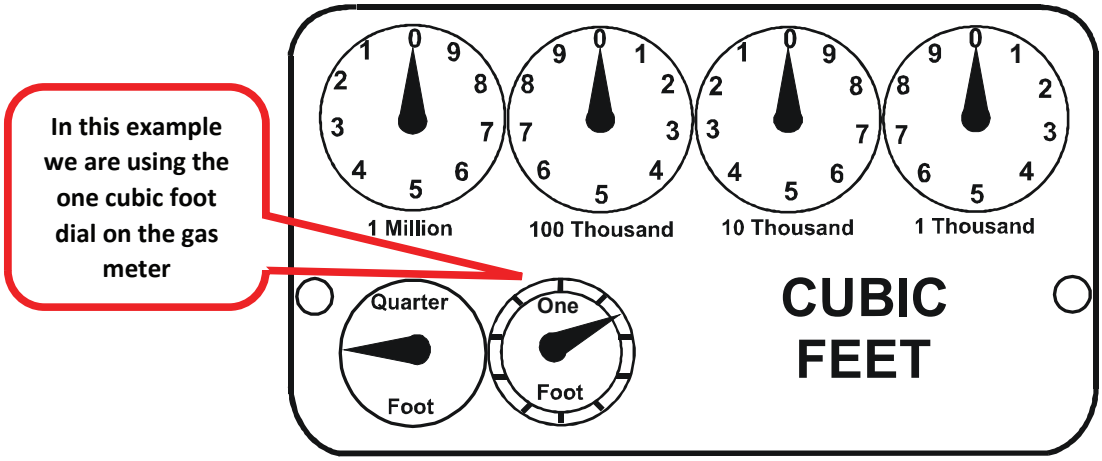


TABLE 1

4. Using Table 2 below, find the number of seconds it took for the dial to make a full revolution. To the right of that number of seconds and below the Size of Test Dial (selected in step 3 and shown in Table 1) will be the Cubic Feet per Hour (CFH).

Locate 40 seconds for one revolution in the chart below

Then locate the 1 cu ft dial column and select the corresponding CFH from the 40 seconds for one revolution row

**GAS RATE -- CUBIC FEET PER HOUR**

| Seconds for One Revolution | Size of Test Dial | | | | | Seconds for One Revolution | Size of Test Dial | | | | |
|---|---|---|---|---|---|---|---|---|---|---|---|
| | 1/4 cu/ft | 1/2 cu/ft | 1 cu/ft | 2 cu/ft | 5 cu/ft | | 1/4 cu/ft | 1/2 cu/ft | 1 cu/ft | 2 cu/ft | 5 cu/ft |
| 10 | 90 | 180 | 360 | 720 | 1800 | 36 | 25 | 50 | 100 | 200 | 500 |
| 11 | 82 | 164 | 327 | 655 | 1636 | 37 | -- | -- | 97 | 195 | 486 |
| 12 | 75 | 150 | 300 | 600 | 1500 | 38 | 23 | 47 | 95 | 189 | 474 |
| 13 | 69 | 138 | 277 | 555 | 1385 | 39 | -- | -- | 92 | 185 | 462 |
| 14 | 64 | 129 | 257 | 514 | 1286 | 40 | 22 | 45 | 90 | 180 | 450 |
| 15 | 60 | 120 | 240 | 480 | 1200 | 41 | -- | -- | | 176 | 439 |
| 16 | 56 | 113 | 225 | 450 | 1125 | 42 | 21 | 43 | 86 | 172 | 429 |
| 17 | 53 | 106 | 212 | 424 | 1059 | 43 | -- | -- | -- | 167 | 419 |
| 18 | 50 | 100 | 200 | 400 | 1000 | 44 | -- | 41 | 82 | 164 | 409 |
| 19 | 47 | 95 | 189 | 379 | 947 | 45 | 20 | 40 | 80 | 160 | 400 |
| 20 | 45 | 90 | 180 | 360 | 900 | 46 | -- | -- | 78 | 157 | 391 |
| 21 | 43 | 86 | 171 | 343 | 857 | 47 | 19 | 38 | 76 | 153 | 383 |
| 22 | 41 | 82 | 164 | 327 | 818 | 48 | -- | -- | 75 | 150 | 375 |
| 23 | 39 | 78 | 157 | 313 | 783 | 49 | -- | -- | -- | 147 | 367 |
| 24 | 37 | 75 | 150 | 300 | 750 | 50 | 18 | 36 | 72 | 144 | 360 |
| 25 | 36 | 72 | 144 | 288 | 720 | 51 | -- | -- | -- | 141 | 355 |
| 26 | 34 | 69 | 138 | 277 | 692 | 52 | -- | -- | 69 | 138 | 346 |
| 27 | 33 | 67 | 133 | 265 | 667 | 53 | 17 | 34 | -- | 136 | 340 |
| 28 | 32 | 64 | 129 | 257 | 643 | 54 | -- | -- | 67 | 133 | 333 |
| 29 | 31 | 62 | 124 | 248 | 621 | 55 | -- | -- | -- | 131 | 327 |
| 30 | 30 | 60 | 120 | 240 | 600 | 56 | 16 | 32 | 64 | 129 | 321 |
| 31 | -- | -- | 116 | 232 | 581 | 57 | -- | -- | -- | 126 | 316 |
| 32 | 28 | 56 | 113 | 225 | 563 | 58 | -- | 31 | 62 | 124 | 310 |
| 33 | -- | -- | 109 | 218 | 545 | 59 | -- | -- | -- | 122 | 305 |
| 34 | 26 | 53 | 106 | 212 | 529 | 60 | 15 | 30 | 60 | 120 | 300 |
| 35 | -- | -- | 103 | 206 | 514 | | | | | | |

TABLE 2

# SCHEDULED MAINTENANCE

5. Use this formula to verify the Cubic Feet per Hour (CFH) input determined in step 4 is correct:

**(3600 x Gas Meter Dial Size) / Time (seconds) = Cubic Feet per Hour (CFH)**

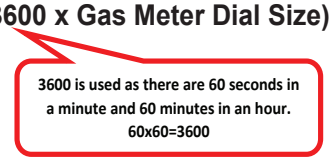


6. Check with your local utility for actual BTU content (caloric value) of natural gas in the area (the average is 1025 BTU's).
7. Use this formula to calculate the BTU/HR input (See BTU/HR Calculation Example):

**Cubic Feet per Hour (CFH) x BTU content of your natural gas = BTU/HR input**

8. Should the figure you calculated not fall within five (5) percent of the nameplate rating of the unit, adjust the gas valve pressure regulator or resize orifices. To adjust the pressure regulator on the gas valve, turn downward (clockwise) to increase pressure and input, and upward (counterclockwise) to decrease pressure and input. A properly operating unit must have the BTU per hour input and CFM of air, within the limits shown to prevent short cycling of the equipment. As the external static pressure goes up, the temperature rise will also increase. Consult the proper tables for temperature rise limitation.

**BTU/HR Calculation Example:**
The unit being tested takes 40 seconds for the 1 cubic foot dial to make one complete revolution. Using the chart, this translates to 90 cubic feet per hour. Based upon the assumption that one cubic foot of natural gas has 1,025 BTU's (Check with your local utility for actual BTU content), the **calculated input is 92,250 BTU's per hour.**

**Furnace Nameplate Input in this example:** 90,000 BTU/HR
**Calculated Gas Input in this example:** 92,250 BTU/HR
***This example is within the 5% tolerance input and does not need adjustment.***

**CAUTION**

ALWAYS CONNECT A MANOMETER TO THE OUTLET TAP AT THE GAS VALVE BEFORE ADJUSTING THE PRESSURE REGULATOR. IN NO CASE SHOULD THE FINAL MANIFOLD PRESSURE VARY MORE THAN PLUS OR MINUS .2 INCHES WATER COLUMN FROM 3 INCHES WATER COLUMN FOR NATURAL GAS.

A properly operating unit must have the BTU per hour input and CFM of air, within the limits shown to prevent short cycling of the equipment. As the external static pressure goes up, the temperature rise will also increase. Consult the proper tables for temperature rise limitation.

# SERVICING

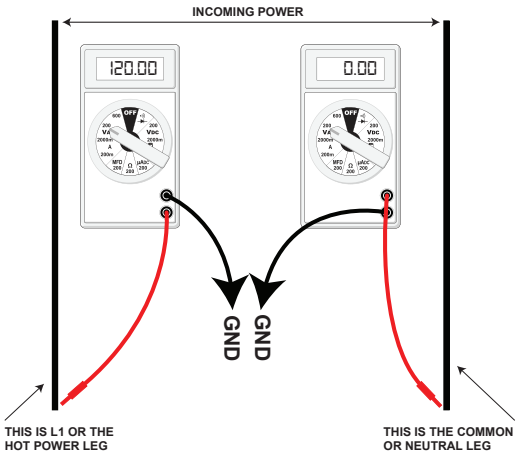


These then should be wired to the furnace accordingly.

CHECKING FOR PHASING - PRIMARY TO SECONDARY OF UNMARKED TRANSFORMERS*

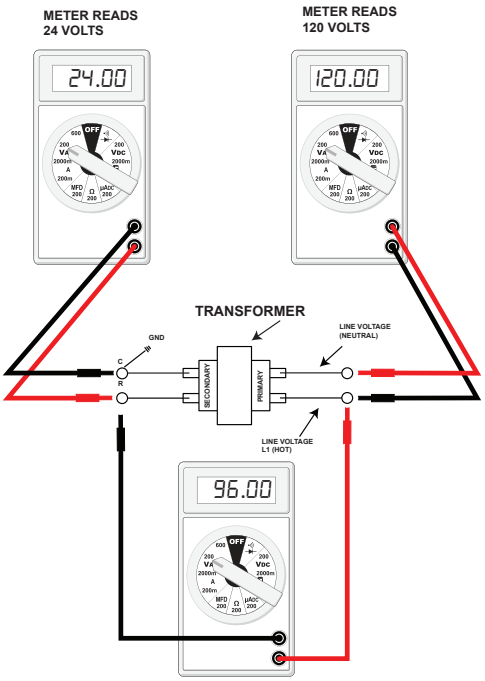


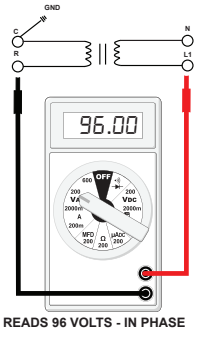


READS 96 VOLTS - IN PHASE

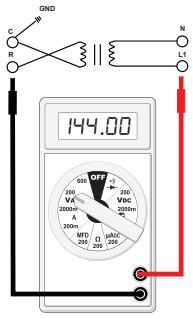


READS 144 VOLTS - OUT OF PHASE

If meter reads approximately 96 volts - the primary to secondary are in phase - if reads approximately 144 volts out of phase - reverse low voltage wires.

***NOTE:** For flame rectification the common side of the secondary voltage (24 V) is cabinet grounded. If you were to bench test a transformer the primary neutral and secondary common must be connected together for testing purposes.

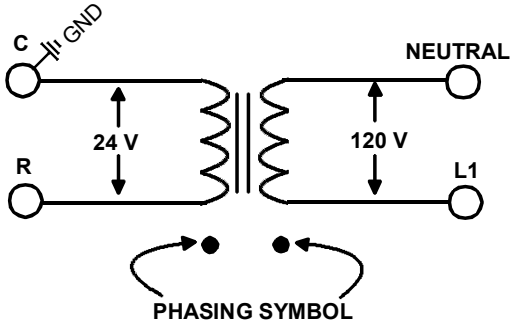


Some transformers will display phasing symbols as shown in the illustration to the left to assist in determining proper transformer phasing.

Checking for polarization and phasing should become a habit in servicing. Let's start now.

# SERVICING

## CHECKING VOLTAGE

**WARNING**

**HIGH VOLTAGE!**
**DISCONNECT ALL POWER BEFORE SERVICING OR INSTALLING THIS UNIT. MULTIPLE POWER SOURCES MAY BE PRESENT. FAILURE TO DO SO MAY CAUSE PROPERTY DAMAGE, PERSONAL INJURY OR DEATH.**



1. Remove the burner door to gain entry to the Junction Box.
2. Remove cover from the Junction Box and gain access to incoming power lines.

With Power ON:

**WARNING**

**LINE VOLTAGE NOW PRESENT.**

3. Using a voltmeter, measure the voltage across the hot and neutral connections.

**NOTE:** To energize the furnace, the Door Interlock Switch must be engaged at this point.

4. No reading - indicates open wiring, open fuse, no power, or faulty Door Interlock Switch from unit to fused disconnect service. Repair as needed.
5. With ample voltage at line voltage connectors, energize the furnace blower motor by jumpering terminals R to G on the integrated ignition control.
6. With the blower motor in operation, the voltage should be 120 volts ± 10 percent.
7. If the reading falls below the minimum voltage, check the line wire size. Long runs of undersized wire can cause low voltage. If wire size is adequate, notify the local power company of the condition.
8. After completing check and/or repair, replace Junction Box cover and reinstall the service panel doors.
9. Turn on electrical power and verify proper unit operation.

## CHECKING WIRING

**WARNING**

**DISCONNECT ALL POWER BEFORE SERVICING.**

1. Check wiring visually for signs of overheating, damaged insulation and loose connections.
2. Use an ohmmeter to check continuity of any suspected open wires.
3. If any wires must be replaced, replace with AWM, 105°C. 2/64 thick insulation of the same gauge or its equivalent.

## CHECKING THERMOSTAT, WIRING

**WARNING**

**DISCONNECT ALL POWER BEFORE SERVICING.**

1. Remove the blower compartment door to gain access to the thermostat low voltage wires located at the furnace integrated control module terminals.
2. Remove the thermostat low voltage wires at the furnace control panel terminal board.
3. Jumper terminals R to W on the integrated ignition control.

With Power On (and Door Interlock Switch closed):

**WARNING**

**LINE VOLTAGE NOW PRESENT.**

4. Induced Draft Motor must run and pull in pressure switch.
5. If the hot surface ignitor heats and at the end of the ignitor warm-up period the gas valve opens and the burners ignite, the trouble is in the thermostat or wiring.
6. With power off, check the continuity of the thermostat and wiring. Repair or replace as necessary.

If checking the furnace in the air conditioning mode, proceed as follows:

7. With power off, Jumper terminals R to Y to G.
8. Turn on the power.
9. If the furnace blower motor starts and the condensing unit runs, then the trouble is in the thermostat or wiring. Repair or replace as necessary.
10. After completing check and/or repair of wiring and check and/or replacement of thermostat, reinstall blower compartment door.
11. Turn on electrical power and verify proper unit operation.

## CHECKING TRANSFORMER AND CONTROL CIRCUIT

A step-down transformer 120 volt primary to 24 volt secondary, 40 VA (Heating and Cooling Models) supplies ample capacity of power for either operation.

# SERVICING

**WARNING**

**High Voltage!**
**Disconnect all power before servicing or installing this unit. Multiple power sources may be present. Failure to do so may cause property damage, personal injury or death.**



1. Remove blower compartment door to gain access to the thermostat low voltage wires located at the furnace integrated control module.
2. Remove the thermostat low voltage wires at the furnace integrated control module terminals.

With Power On (and Door Interlock Switch closed):

**WARNING**

**Line voltage now present.**

3. Use a voltmeter, check voltage across terminals R and C. Must read 24 VAC.
4. No voltage indicates faulty transformer, open fuse, bad wiring, bad splice, or open door interlock switch.
5. Check transformer primary voltage at incoming line voltage connections, fuse, splices, and blower door interlock switch.
6. If line voltage is available to the primary side of transformer and not at secondary side, the transformer is inoperative. Replace.
7. After completing check and/or replacement of transformer and check and/or repair of control circuit, reinstall blower compartment door.
8. Turn on electrical power and verify proper unit operation.

## CHECKING AIR CIRCULATOR BLOWER MOTOR

**WARNING**

**Disconnect ALL power before servicing.**

1. Remove blower compartment door to gain access to the circulator blower motor and integrated ignition control.
2. Disconnect the motor wire leads from its connection point at the integrated ignition control module and capacitor if applicable.
3. Using a ohmmeter, test for continuity between each of the motor leads.
4. Touch one probe of the ohmmeter to the motor frame (ground) and the other probe in turn to each lead.

If the windings do not test continuous or a reading is obtained to ground, replace the motor.

5. After completing check and/or replacement of circulator blower motor or induced draft blower motor, reinstall blower compartment door.
6. Turn on electrical power and verify proper unit operation.

**WARNING**

**Disconnect ALL power before servicing.**

## CHECKING DUCT STATIC

The maximum and minimum allowable external static pressures are found in the specification section. These tables also show the amount of air being delivered at a given static by a given motor speed or pulley adjustment. The furnace motor cannot deliver proper air quantities (CFM) against statics other than those listed.

Too great of an external static pressure will result in insufficient air that can cause excessive temperature rise, resulting in limit tripping, etc. Whereas not enough static may result in motor overloading.

To determine proper air movement, proceed as follows:

1. With clean filters in the furnace, use a manometer to measure the static pressure of the return duct at the inlet of the furnace. (Negative Pressure)
2. Measure the static pressure of the supply duct. (Positive Pressure)
3. Add the two (2) readings together for total external static pressure.

**NOTE: Both readings may be taken simultaneously and read directly on the manometer if so desired. If an air conditioner coil or Electronic Air Cleaner is used in conjunction with the furnace, the readings must also include theses components, as shown in the following drawing.**

4. Consult proper tables for the quantity of air.

If the total external static pressure exceeds the minimum or maximum allowable statics, check for closed dampers, registers, undersized and/or oversized poorly laid out duct work.

# SERVICING

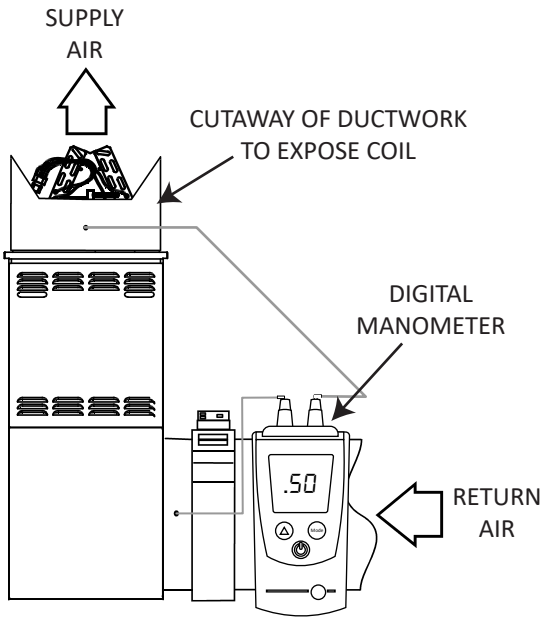


**Checking Static Pressure**

## CHECKING TEMPERATURE RISE

The more air (CFM) being delivered through a given furnace, the less the rise will be; so the less air (CFM) being delivered, the greater the rise. The temperature rise should be adjusted in accordance to a given furnace specifications and its external static pressure. An incorrect temperature rise may result in condensing in or overheating of the heat exchanger. An airflow and temperature rise table is provided in the blower performance specification section. Determine and adjust temperature rise as follows:

1. Operate furnace with burners firing for approximately ten minutes. Check BTU input to furnace - do not exceed input rating stamped on rating plate. Ensure all registers are open and all duct dampers are in their final (fully or partially open) position.
2. Place thermometers in the return and supply ducts as close to the furnace as possible. Thermometers must not be influenced by radiant heat by being able to “see” the heat exchanger.

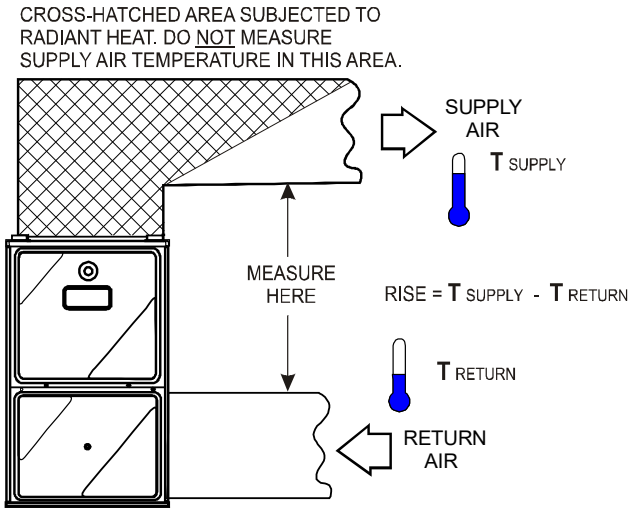


**Checking Temperature Rise**

3. Subtract the return air temperature from the supply air temperature to determine the air temperature rise. Allow adequate time for thermometer readings to stabilize.
4. Adjust temperature rise by adjusting the circulator blower speed. Increase blower speed to reduce temperature rise. Decrease blower speed to increase temperature rise. Refer to *Circulator Blower Speed* section in the Product Design section of this manual for speed changing details. Temperature rise is related to the BTUH output of the furnace and the amount of air (CFM) circulated over the heat exchanger. Measure motor current draw to determine that the motor is not overloaded during adjustments.

## CHECKING PRIMARY LIMIT CONTROL

All use a nonadjustable, automatic reset, bi-metal type limit control.

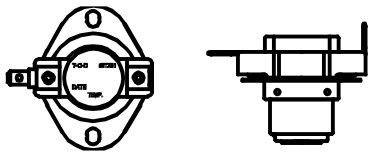

**Style 1**

**WARNING**

**High Voltage!**
**Disconnect all power before servicing or installing this unit. Multiple power sources may be present. Failure to do so may cause property damage, personal injury or death.**

1. Remove burner compartment door to gain access to the primary limit.
2. Remove low voltage wires at limit control terminals.
3. With an ohmmeter, test between these two terminals as shown in the following drawing. The ohmmeter should read continuous unless heat exchanger temperature is above limit control setting. If not as above, replace the control.

# SERVICING

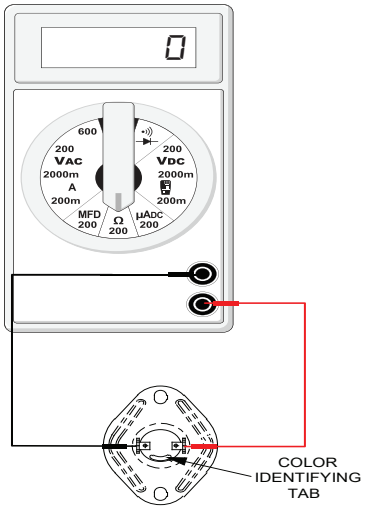


TESTING PRIMARY LIMIT CONTROL

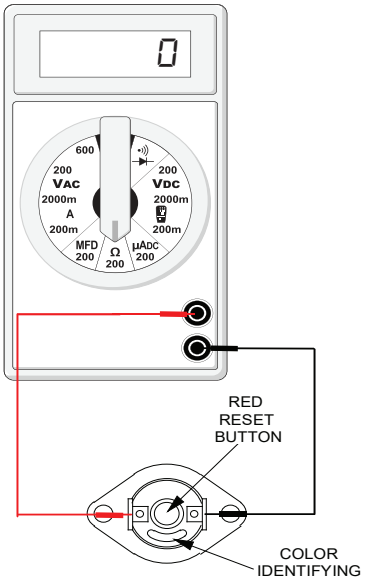


TESTING AUXILIARY LIMIT CONTROL

## CHECKING AUXILIARY LIMIT CONTROL

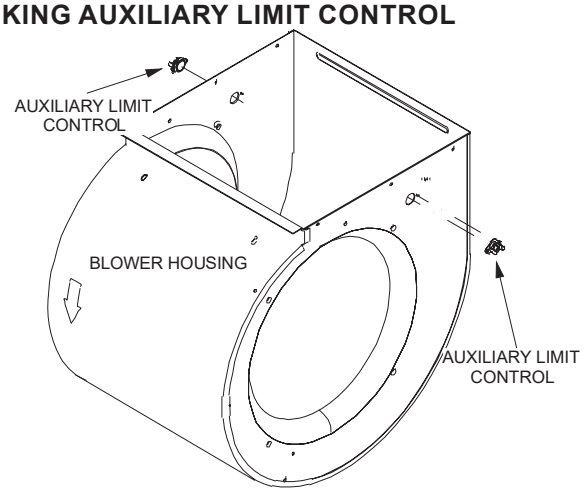


AUXILIARY LIMIT CONTROL LOCATION

**WARNING**

HIGH VOLTAGE!
DISCONNECT ALL POWER BEFORE SERVICING OR INSTALLING THIS UNIT. MULTIPLE POWER SOURCES MAY BE PRESENT. FAILURE TO DO SO MAY CAUSE PROPERTY DAMAGE, PERSONAL INJURY OR DEATH.

**WARNING**

TO AVOID POSSIBLE FIRE, ONLY RESET THE AUXILIARY LIMIT CONTROL ONCE. IF IT SHOULD OPEN A SECOND TIME, A QUALIFIED SERVICER MUST DETERMINE WHY THE AUXILIARY LIMIT OPENED BEFORE RESETTING AGAIN.

## INDUCED DRAFT BLOWER MOTOR

**WARNING**

HIGH VOLTAGE!
DISCONNECT ALL POWER BEFORE SERVICING OR INSTALLING THIS UNIT. MULTIPLE POWER SOURCES MAY BE PRESENT. FAILURE TO DO SO MAY CAUSE PROPERTY DAMAGE, PERSONAL INJURY OR DEATH.

The induced draft assembly uses a three phase motor to draw flue gases through the heat exchanger. The inducer uses ball bearings and is permanently lubricated. This motor is driven at varying speeds by the VFD (variable frequency drive) section of the IFC. The IFC takes typical single phase power supplied to the furnace and converts it to a three phase supply to operate the draft inducer at the desired speed. The windings of the induced draft motor will have equal resistance +/- 5%. Normal resistance readings at room temperature will range from 14-17 ohms. The voltage supplied by the IFC to drive the induced draft blower will vary from 15-110 volts A/C between any two windings. This would be read between any two of the three power wires between the IFC and the induced draft blower. This voltage to the IBD will vary between furnace models and is dependent on what percentage of maximum fire is being called for. The power wires are colored red, white, and black. A green colored ground wire is also present.

# SERVICING

## CHECKING GAS VALVE (REDUNDANT)

A combination redundant operator type gas valve which provides all manual and automatic control functions required for gas fired heating equipment is used.
The valve provides control of main burner gas flow, pressure regulation, and 100 percent safety shut-off.

**WARNING**

**Disconnect ALL power before servicing.**

Single stage gas valves should be tested on the furnace with 24 VAC connected to the gas valve and manometers reading supply line and manifold pressures.

**WARNING**

**Disconnect ALL Gas and Electrical Power Supply.**

Orifices should be treated with care in order to prevent damage. They should be removed and installed with a box-end wrench in order to prevent distortion. In no instance should an orifice be peened over and redrilled. This will change the angle or deflection of the vacuum effect or entraining of primary air, which will make it difficult to adjust the flame properly. This same problem can occur if an orifice spud of a different length is substituted.

**WARNING**

**Disconnect ALL Gas and Electrical Power Supply.**

## CHECKING GAS PRESSURE

### Gas Supply Pressure Measurement

**CAUTION**

**To prevent unreliable operation or equipment damage, the inlet gas supply pressure must be as specified on the unit rating plate with all other household gas fired appliances operating.**

Gas inlet and manifold pressures should be checked and adjusted in accordance to the type of fuel being consumed. The line pressure supplied to the gas valve must be within the range specified below. The supply pressure can be measured at the gas valve inlet pressure tap or at a hose fitting installed in the gas piping drip leg. The supply pressure must be measured with the burners operating. To measure the gas supply pressure, use the following procedure.

**WARNING**

**Disconnect ALL Gas and Electrical Power Supply.**

1. After turning off gas to furnace at the manual gas shutoff valve external to the furnace, remove burner compartment door to gain access to the gas valve.
2. Connect a calibrated water manometer (or appropriate gas pressure gauge) at either the gas valve inlet pressure tap or the gas piping drip leg as shown in the following figures. Refer to *Measuring Gas Pressure: Single Stage Valves* figure for single stage valve inlet pressure tap connections.

**NOTE: At either location, a hose fitting must be installed prior to making the hose connection.**

**NOTE: Use adapter kit #0151K00000S to measure gas pressure on White-Rodgers 36J22 gas valves.**

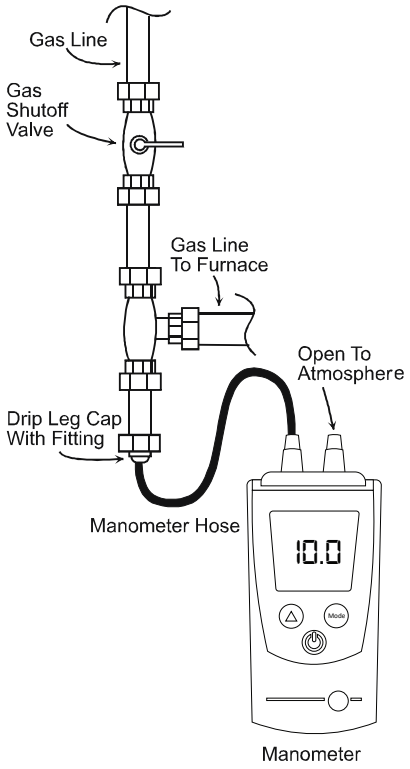


**Measuring Inlet Gas Pressure (Alternate Method)**

3. Turn ON the gas and electrical power supply and operate the furnace and all other gas consuming appliances on the same gas supply line.
4. Measure furnace gas supply pressure with burners firing. Supply pressure must be within the range specified in the following table.

| INLET GAS SUPPLY PRESSURE | | |
|---|---|---|
| **Natural Gas** | Minimum: 4.5" w.c. | Maximum: 10.0" w.c. |

If supply pressure differs from above, make necessary adjustments to pressure regulator, gas piping size, etc., and/or consult with local gas utility.

## SERVICING

**WARNING**

**High Voltage!**
**Disconnect all electrical power and shut off gas supply before servicing or installing this unit. Multiple power sources may be present. Failure to do so may cause property damage, personal injury or death.**



5. Disconnect manometer after turning off gas at manual shutoff valve. Reinstall plug before turning on gas to furnace.
6. Turn OFF any unnecessary gas appliances started in step 3.
7. Turn on gas to furnace and check for leaks. If leaks are found, repair and then reinstall burner compartment door.
8. Turn on electrical power and verify proper unit operation.

### GAS MANIFOLD PRESSURE MEASUREMENT AND ADJUSTMENT

**CAUTION**

**To prevent unreliable operation or equipment damage, the gas manifold pressure must be as specified on the unit rating plate. Only minor adjustments should be made by adjusting the gas valve pressure regulator.**

**NOTE: Use adapter kit #0151K00000S to measure gas pressure on White-Rodgers 36J22 gas valves.**

Only small variations in gas pressure should be made by adjusting the gas valve pressure regulator. The manifold pressure must be measured with the burners operating. To measure and adjust the manifold pressure, use the following procedure.

**WARNING**

**HIGH VOLTAGE**
**Disconnect ALL electrical power and shut off gas supply before servicing or installing.**

1. After turning off gas to furnace at the manual gas shutoff valve external to the furnace, remove burner compartment door to gain access to the gas valve.
2. Connect a calibrated water manometer (or appropriate gas pressure gauge) at the gas valve outlet pressure tap. Refer to *Measuring Gas Pressure: Single Stage Valves* figure for single stage valve outlet pressure tap connections.

**WARNING**

**Line voltage now present.**

3. Turn ON the gas and electrical power supply and operate the furnace.
4. Measure gas manifold pressure with burners firing. Adjust manifold pressure using the table below.

| Manifold Gas Pressure | |
|---|---|
| **Natural Gas** | 2.8 -3.2" w.c. |

The final manifold pressure must not vary from the above specified pressures. Any necessary major changes in gas flow rate should be made by changing the size of the burner orifice.

5. White-Rodgers 36J22 Valves:
   a. Back outlet pressure test screw (inlet/outlet pressure boss) out one turn (counterclockwise, not more than one turn).
   b. Attach a hose and manometer to the outlet pressure  outlet pressure boss.
   c. Turn ON the gas supply.
   d. Turn on power and close thermostat “R” and “W” contacts to provide a call for low stage heat.
   e. Measure the gas manifold pressure with burners firing. Adjust manifold pressure using the *Manifold Gas Pressure* table shown below.
   f. Remove regulator cover screw from the outlet pressure regulator adjust tower and turn screw clockwise to increase pressure or counterclockwise to decrease pressure. Replace regulator cover screw.
   g. Turn off all electrical power and gas supply to the system.
   h. Remove the manometer hose from the hose barb fitting or outlet pressure boss.
   i. Turn outlet pressure test screw in to seal pressure port (clockwise, 7 in-lb minimum).

**WARNING**

**High Voltage!**
**Disconnect all electrical power and shut off gas supply before servicing or installing this unit. Multiple power sources may be present. Failure to do so may cause property damage, personal injury or death.**



6. Turn on gas to furnace and check for leaks. If leaks are found, repair and then reinstall burner compartment door.
7. Turn on electrical power and verify proper unit operation.

# SERVICING

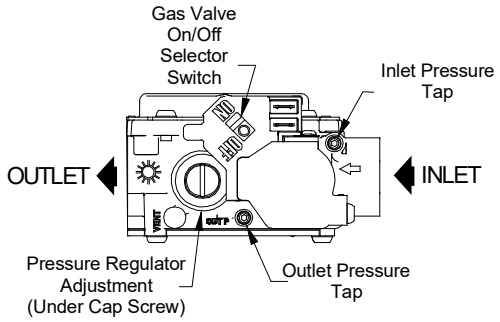


**WARNING**

**HIGH VOLTAGE**
**DISCONNECT ALL ELECTRICAL POWER AND SHUT OFF GAS SUPPLY BEFORE SERVICING OR INSTALLING.**

**WARNING**

**DISCONNECT ALL POWER BEFORE SERVICING.**

## CHECKING HOT SURFACE IGNITER

**120V Silicon Nitride Igniter** - ULN furnaces use a 120V silicone nitride igniter, part #0130F00717. The normal operating temperature is approximately 2156°F - 2678°F. At room temperature the igniter ohm reading should be from 20-100 ohms.

**WARNING**

**LINE VOLTAGE NOW PRESENT.**

## CHECKING PRESSURE TRANSDUCER (80% ULN)

The 80% ULN products utilize a pressure transducer (in lieu of a pressure switch). The pressure transducer signals the control board to modulate the heating cycle during a call for heat by regulating the induced draft motor speed. By regulating the speed of the induced draft motor, proper air-fuel ratios are maintained.

**Sensing range specification:** 0.0 to -4.0 inches W.C.

**Voltage specifications:**

- Steady State: 5.0 vDC from red to green wire (transducer wiring harness input).
- With Inducer off: 0.5 vDC from black to green wire (transducer wiring harness output).
- During operation: Output range equals 0.5 - 4.5 vDC.

**WARNING**

**HIGH VOLTAGE!**
**DISCONNECT ALL POWER BEFORE SERVICING OR INSTALLING THIS UNIT. MULTIPLE POWER SOURCES MAY BE PRESENT. FAILURE TO DO SO MAY CAUSE PROPERTY DAMAGE, PERSONAL INJURY OR DEATH.**

## CHECKING FOR DELAYED IGNITION

Delayed ignition is a delay in lighting a combustible mixture of gas and air which has accumulated in the combustion chamber.

Furnace design makes this extremely unlikely unless safety controls have been by-passed or tampered with. Never by-pass or alter furnace controls.

If delayed ignition should occur, the following should be checked:

1. Improper gas pressure - adjust to proper pressure (See *CHECKING GAS PRESSURE*).

## CHECKING INTEGRATED IGNITION CONTROL BOARDS

**NOTE: FAILURE TO EARTH GROUND THE FURNACE, REVERSING THE NEUTRAL AND HOT WIRE CONNECTION TO THE LINE (POLARITY), OR A HIGH RESISTANCE CONNECTION IN THE NEUTRAL LINE MAY CAUSE THE CONTROL TO LOCKOUT DUE TO FAILURE TO SENSE FLAME.**

**WARNING**

**TO AVOID THE RISK OF ELECTRICAL SHOCK, WIRING TO THE UNIT MUST BE PROPERLY POLARIZED AND GROUNDED. DISCONNECT POWER BEFORE PERFORMING SERVICE LISTED BELOW.**

The ground wire must run from the furnace all the way back to the electrical panel. Proper grounding can be confirmed by disconnecting the electrical power and measuring resistance between the neutral (white) connection and the burner closest to the flame sensor. Resistance should be less than 10 ohms.

The ignition control is a combination electronic and electromechanical device and is not field repairable. Complete unit must be replaced.

# SERVICING

**WARNING**

**Line voltage now present.**

These tests must be completed within a given time frame due to the operation of the ignition control.

1. Check for 120 volts from Line 1 (Hot) to Line 2 (Neutral) at the ignition control. No voltage, check the door switch connections and wire harness for continuity.
2. Check for 24 volts from W to C terminal on the ignition control. No voltage. Check transformer, room thermostat, and wiring.
   If you have 24 volts coming off the transformer but receive approximately 13 volts on the terminal board between (C) and (R), check for blown fuse.
3. Check for 120 volts to the induced draft blower by measuring voltage between Pin 4 & 5 (black & white wire on 5 pin connector.)
4. If voltage is present in Steps 1 through 3 and the induced draft blower is operating, check for 120 volts to the ignitor during the preheat cycle.
5. After the ignitor warmup time, begin checking for 24 volts to the gas valve. Voltage will be present for seven seconds only if proof of flame has been established.

**WARNING**

**High Voltage!**
**Disconnect all power before servicing or installing this unit. Multiple power sources may be present. Failure to do so may cause property damage, personal injury or death.**



### CHECKING FLAME SENSOR

1. Disconnect the yellow flame sensor wire from the sensor
2. Connect a micro-amp meter in series with this wire and the sensor terminal.
3. Place the unit into a heating cycle.

**WARNING**

**Line voltage now present.**

4. As soon as flame is established a micro-amp reading should be evident once proof of flame (micro-amp reading) is established, the hot surface ignitor will be de-energized.
5. The Integrated Ignition controls will have 3 to 8 micro-amps. If the micro-amp reading is less than 1, check for high resistance wiring connections, sensor to burner gap, dirty flame sensor, or poor grounding.
6. If absolutely no reading, check for continuity on all components and if good - replace ignition control module.

**NOTE: Contaminated fuel or combustion air can create a nearly invisible coating on the flame sensor. This coating works as an insulator causing a loss in the flame sense signal. If this situation occurs the flame sensor must be cleaned with steel wool.**

# TROUBLESHOOTING

## MENU OPTIONS

| LED Display | Menu Description |
|---|---|
| ASE | Aux (condensate switch enabled) |
| bSt | Enable or disable inverter boost operation. (compressor speed may increase when this feature is on) (inverter only) |
| btt | Boost mode will operate above this selected temperature. On = boost mode always on (default = 105°F) (inverter only) |
| CAP | Cooling Airflow Profile setting (default = profile D shown as 4) |
| CbP | Heat Pump compressor lockout temperature. Furnace will act as primary heat source below this temperature. (Default = 45°F) |
| CdL | Compressor off delay at the beginning and end of a defrost cycle.(default = 30 seconds) |
| CFd | Cooling Airflow Off Delay Time. (default = 60 seconds) |
| CLr | Resets all cooling settings to factory default. |
| Cnd | Cooling Airflow On Delay Time (default = 5 seconds) |
| Cr | Control Firmware Revision Number |
| Cr9 | Enable or disable inverter charge mode. |
| CrP | Select the range that includes the desired compressor RPS for inverter cooling operation. See inverter manual for menu options |
| CrS | Maximum Compressor RPS for cooling mode. (inverter only) |
| CSt | Percentage of high stage cooling airflow to run during low stage operation. (default = 70%) |
| CtF | Cooling Airflow Trim (default 0%) |
| CtH | High Cooling Airflow Trim for inverter units. See inverter manual for menu options and defaults |
| CtI | Intermediate Cooling Airflow Trim for inverter units. See inverter manual for menu options and defaults |
| CtL | Low Cooling Airflow Trim for inverter units. See inverter manual for menu options and defaults |
| dF | Compressor run time between defrost cycles. (default = 30 minutes) (2 stage units) |
| dHE | Enables or disables dehumidification feature in the outdoor unit. (default = Enabled) |
| dHL | Select “1” to enable dehumidification when the thermostat DH terminal is energized. Select “0” to enable dehumidification when the thermostat DH terminal is de-energized. (default = 1) |
| FCL | View 6 most recent fault codes and Clear Fault Codes if desired (outdoor communicating units) |
| FdF | Force system into a defrost cycle (inverter units) |
| FSd | Constant Fan Speed as percent of maximum airflow. Default = 25% |
| 9Fd | Gas Heat Fan Off Delay (default = 90 seconds) |
| 9nd | Gas Heat Fan On Delay (default = 30 seconds) |
| 9St | Percentage of high stage gas heating airflow to run during low stage gas heat operation (default = 70%) |
| 9H | Gas Heat |
| F 10 | Last 10 Faults |
| A2U | A2L Function Verification |
| A2E | A2L Function Enabled |

| LED Display | Menu Description |
|---|---|
| 9tF | Gas Heat Airflow Trim (default = 0%) |
| Hdl | Maximum Compressor Run Time Between Defrost Cycles (default= 120 minutes) |
| HFd | Heat Pump Heating Airflow Off Delay Time (default = 60 seconds) |
| Hnd | Heat Pump Heating Airflow On Delay Time (default = 5 seconds) |
| HrP | Select the range that includes the desired compressor RPS for inverter heating operation. See inverter manual for menu options |
| HrS | Maximum Compressor RPS for Heating Mode (inverter only) |
| Hrt | Reset all heat pump heating settings to factory default. |
| HSt | Percentage of high stage heat pump heating airflow to run during low stage operation. (default = 70%) |
| HtF | Heat Pump Indoor Airflow Trim (default = 0%) |
| HtH | High Heating Airflow Trim for Inverter Units. See inverter manual for menu options and defaults |
| HtI | Intermediate Heating Airflow Trim for Inverter Units. See inverter manual for menu options and defaults |
| HtL | Low Heating Airflow Trim for Inverter Units. See inverter manual for menu options and defaults |
| Lrn | Restart communications between the indoor and outdoor unit. |
| OdS | Select the number of stages for the non-communicating outdoor unit. Default = OFF meaning no outdoor unit. |
| PPd | Enable Pump Down Mode |
| rFd | Resets furnace settings to factory defaults. |
| SCt | Maximum Current Option (system will limit capacity to percentage of maximum current) (default = 100%) |
| Sr | Control Shared Data Revision Number |
| Srt | Resets all outdoor unit settings to factory defaults. |
| SUt | System Verification Test (inverters only) |
| ton | Indoor Airflow for non-communicating outdoor units. (values based on 400CFM per ton) (default = 3.0 Ton) |
| Utr | Select Outdoor Unit Elevation (SL=same level, OL = outdoor lower, IL = indoor lower) Default = Outdoor Lower |
| CFS | 1 = system will try to satisfy the thermostat quickly.5 (default) = system will try to satisfy the thermostat more slowly. |
| t9t | Menu is enabled if the CFS menu is set to 6. Select the target time the system will attempt to satisfy the thermostat. |
| SUP | Menu is enabled if the CFS menu is set to 6. Select the percentage past the target time when the system will transition to gas furnace operation during heat mode. |
| Utt | Menu is enabled if the CFS is set to 6. (the gas furnace will run during the next heat call if the heat pump fails to satisfy the custom target time for this number of consecutive cycles) (default = 20 cycles) |
| UtE | Menu is enabled if the CFS menu is set to 6. (if low stage gas heat is able to consecutively satisfy the thermostat under the set target time for this number of cycles, the system will transition to the heat pump for primary heating) |
| SdP | Menu is enabled if the CFS menu is set to 6. (this percentage will help determine when switching back to heat pump operation is appropriate. Default = 20%. If target time = 20 minutes, low stage furnace operation must satisfy the thermostat by less than 16 minutes. (target time - 20% default = 16 minutes). |

# TROUBLESHOOTING

## STATUS CODES

| LED Display | Description of System Status |
|---|---|
| 1AC | Compressor Cooling, Low Stage (non-communicating units) |
| 2AC | Compressor Cooling, High Stage (non-communicating units) |
| 1AC | Compressor Heat, Low Stage (non-communicating units) |
| 2AC | Compressor Heat, High Stage (non-communicating units) |
| AC | Compressor Cooling, Single-Stage (single stage non-comm. units) |
| AC 1 | Compressor Cooling, Low Stage (communicating units) |
| AC2 | Compressor Cooling, High Stage (communicating units) |
| dHU | Dehumidification |
| FAn | Constant Fan |
| HP | Compressor Heat, Single-Stage (single stage non-comm. units) |
| HP 1 | Compressor Heat, Low Stage (Communicating Units) |
| HP2 | Compressor Heat, High Stage (Communicating Units) |
| 1 dL | Idle |
| uAC | Inverter Cooling |
| uHP | Inverter Heating |
| dFt | Defrost |
| GH | Gas Heat |

## TROUBLESHOOTING

| Symptom | LED Status | Fault Description | Possible Causes | Corrective Action(s) | Notes & Cautions |
|---|---|---|---|---|---|
| Normal operation. | IdL | Idle | • Normal operation. | • None | • Normal operation. |
| Furnace fails to operate.<br><br>Integrated control module LED display provides no signal. | none | No 120v power to furnace or no 24 volt power to integrated control module. Blown fuse or tripped circuit breaker. Integrated control module is non-functional. | • Manual disconnect switch turned OFF, vdoor switch open or 24 volt wire improperly connected or loose.<br>• Furnace electrical supply shared with other devices.<br>• Integrated control module is non-functional. | • Check 120 volt power to furnace and integrated control module.<br>• Check for possible shorts in 120 volt circuit. Repair as necessary.<br>• Replace non-functional integrated control module. | • Turn power OFF prior to repair.<br>• Read precautions in “Electrostatic Discharge” section of manual.<br>• Replace control with correct replacement part. |
| Furnace fails to operate. | Eb0 | Circulator blower motor not running when it should be running. | • Loose wiring connection at circulator motor power leads or circulator motor power leads disconnected.<br>• Failed circulator blower motor. | • Tighten or correct wiring connection.<br>• Check circulator blower motor. Replace if necessary. | • Turn power OFF prior to repair.<br>• Replace circulator motor with correct replacement part. |
| Furnace fails to operate. | Eb1 | Integrated control module has lost communications with circulator blower motor. | • Loose wiring connection at circulator motor power leads,<br>• Failed circulator blower motor.<br>• Failed integrated control module. | • Tighten or correct wiring connection.<br>• Check circulator blower motor. Replace if necessary.<br>• Check integrated control module. Replace if necessary. | • Turn power OFF prior to repair.<br>• Replace circulator motor with correct replacement part.<br>• Replace integrated control module with correct replacement part. |
| Furnace fails to operate. | Eb2 | Circulator blower motor horse power in shared data set does not match circulator blower motor horse power. | • Incorrect circulator blower motor in furnace.<br>• Incorrect shared data the in integrated control module. | • Verify circulator blower if motor horsepower is the same specified for the specific model. Replace if necessary.<br>• Verify shared data set is correct for the specific model. Re-populate data using the CoolCloud HVAC App if required. | • Turn power OFF prior to repair.<br>• Replace circulator motor with correct replacement part.<br>• Error code will be cleared once shared data and motor horsepower match. |

## TROUBLESHOOTING

| Symptom | LED Status | Fault Description | Possible Causes | Corrective Action(s) | Notes & Cautions |
|---|---|---|---|---|---|
| Furnace operates at reduced performance.<br><br>Airflow delivered is less than expected. | Eb3 | Circulator blower motor is operating in a power, temperature or speed limiting condition. | • Blocked filters.<br>• Restrictive ductwork.<br>• Undersized ductwork.<br>• High ambient temperatures. | • Check filters for blockage. Clean filters or remove obstruction.<br>• Check ductwork for blockage. Remove obstruction. Verify all registers are fully open.<br>• Verify ductwork is appropriately sized for system. Resize/replace ductwork if necessary.<br>• See “III. Product Description” and “IV Location Requirements & Considerations” for furnace installation requirements. | • Turn power OFF prior to repair. |
| Furnace fails to operate. | Eb4 | Circulator blower motor senses a loss of rotor control.<br>Circulator blower motor senses high current. | • Abnormal motor loading, sudden change in speed or torque, sudden blockage of furnace air inlet/outlet. | • Check filters, filter grilles, registers, duct system and furnace air inlet/outlet for blockages. | • Turn power OFF prior to repair. |
| Furnace fails to operate. | Eb5 | Circulator blower motor fails to start 10 consecutive times. | • Obstruction in circulator blower housing.<br>• Seized circulator blower motor bearings.<br>• Failed circulator blower motor. | • Check circulator blower for obstructions. Remove and repair/replace wheel or motor if necessary. | • Turn power OFF prior to repair.<br>• Replace motor with correct replacement part.<br>• Replace wheel with correct replacement part. |
| Furnace fails to operate. | Eb6 | Circulator blower motor shuts down due to over or under voltage condition.<br>Circulator blower motor shuts down due to over temperature condition on power module. | • High AC line voltage to furnace.<br>• Low AC line voltage to furnace.<br>• High ambient temperatures. | • Check power to furnace. Verify line voltage to furnace is within the range specified on the furnace rating plate. See “III. Product Description” and “IV Location Requirements & Considerations” for furnace installation requirements. | • Turn power OFF prior to repair.<br>• Replace motor with correct replacement part.<br>• Re-populate data using the CoolCloudHVAC App if required. |
| Furnace fails to operate. | Eb7 | Circulator blower motor does not have enough information to operate properly. Motor fails to start 40 consecutive times. | • Error with integrated control module.<br>• Motor has a rotor condition. | • Check integrated control module. Verify control is populated with correct shared data set. See data errors above for details.<br>• Check for locked rotor condition. | • Turn power OFF prior to repair. |

# TROUBLESHOOTING

| Symptom | LED Status | Fault Description | Possible Causes | Corrective Action(s) | Notes & Cautions |
|---|---|---|---|---|---|
| Furnace operates at reduced performance or operates on low stage when high stage is expected. | Eb9 | Airflow is lower than demanded. | • Blocked filters.<br>• Restrictive ductwork.<br>• Undersized ductwork.<br>• High ambient temperatures. | • Check filters for blockage. Clean filters or remove obstruction.<br>• Check ductwork for blockage. Remove obstruction. Verify all registers are fully open.<br>• Verify ductwork is appropriately sized for system. Resize/replace ductwork if necessary. | • Turn power OFF prior to repair. |
| Furnace fails to operate. | Ed0 | Data not yet on network. | • No network Data | • Populate shared data set using the CoolCloudHVAC App. | • Turn power OFF prior to repair.<br>• Use the CoolCloudHVAC App to download the shared data set to the furnace.<br>• Error code will be cleared once data is downloaded from the CoolCloudHVAC App. |
| Operation different than expected or no operation. | Ed1 | Invalid shared data. | • Shared data set is invalid. Use the CoolCloudHVAC App to download the shared data to the furnace. | • Verify shared data set is correct for the specific model. Re-populate shared data set using the CoolCloudHVAC App. | • Turn power OFF prior to repair.<br>• Error code will be cleared once data is downloaded from the CoolCloudHVAC App. |
| Furnace fails to operate. | EE0 | Furnace lockout due to excessive number of ignition “retries” (3 total).<br><br>Failure to establish flame.<br><br>Loss of flame after establishment. | • Failure to establish flame. Cause may be no gas to burners, front cover pressure switch stuck open, bad igniter or igniter alignment, improper orifices, or coated/oxidized or improperly connected flame sensor.<br>• Loss of flame after establishment. Cause may be interrupted gas supply, lazy burner flames (improper gas pressure or restriction in flue and/or lack of combustion air), or improper induced draft blower performance. | • Locate and correct gas interruption.<br>• Replace or realign igniter.<br>• Check flame sense signal. Clean sensor if coated and/or oxidized.<br>• Check flue piping for blockage, proper length, elbows and termination.<br>• Verify proper induced draft blower performance. | • Turn power OFF prior to repair.<br>• Igniter is fragile, handle with care.<br>• Clean flame sensor with steel wool.<br>• See “Vent/Flue Pipe” section for piping details. |
| Furnace fails to operate. | EE1 | Pressure switch circuit closed at start of heating cycle. | • Pressure switch contacts sticking.<br>• Short in pressure switch circuit wiring. | • Replace Pressure switch.<br>• Repair short in wiring. | • Turn power OFF prior to repair.<br>• Replace pressure switch with proper replacement part. |

## TROUBLESHOOTING

| Symptom | LED Status | Fault Description | Possible Causes | Corrective Action(s) | Notes & Cautions |
|---|---|---|---|---|---|
| Induced draft blower runs continuously with no further furnace operation. | EE2 | Pressure switch circuit open. | • Pressure switch hose blocked, pinched, or connected improperly.<br>• Blocked flue pipe, or weak induced draft blower.<br>• Incorrect pressure switch set point or malfunctioning switch contacts.<br>• Loose or improperly connected wiring. | • Inspect pressure switch hose. Repair/replace if necessary.<br>• Inspect flue piping for blockage, proper length, elbows and termination. Correct as necessary.<br>• Correct pressure switch set point or contact motion.<br>• Tighten or correct wiring connections. | • Turn power OFF prior to repair.<br>• Replace pressure switch with proper replacement part.<br>• Replace induced draft blower with proper replacement part. |
| Circulator blower runs continuously with no furnace operation. | EE3 | Primary limit circuit open. | • Insufficient conditioned air over the heat exchanger.<br>• Blocked filters, restrictive ductwork.<br>• Improper circulator blower speed or failed circulator blower motor.<br>• Loose or improperly connected wiring in high limit circuit. | • Check filters and ductwork for blockage. Clean filters or remove obstruction.<br>• Check circulator blower speed and performance. Correct speed or replace blower motor if necessary.<br>• Tighten or correct wiring connections. | • Turn power OFF prior to repair.<br>• See Specification Sheet applicable for your model for allowable temp rise range and proper circulator speed. |
| Induced draft blower and circulator blower run continuously with no furnace operation. | EE4 | Flame sensed with no call for heat. | • Short to ground in flame sense circuit.<br>• Lingering burner flame.<br>• Slow closing gas valve. | • Correct short at flame sensor or in flame sensor wiring.<br>• Check for lingering flame.<br>• Verify proper operation of gas valve. | • Turn power OFF prior to repair. |
| No furnace operation. | EE5 | Open fuse. | • Short in low voltage wiring | • Locate and correct short in low voltage wiring. | • Turn power OFF prior to repair.<br>• Replace fuse with 3-amp automotive type. |
| Normal furnace operation with weak flame signal. | EE6 | Flame sense micro amp signal is low. | • Flame sensor is coated/oxidized.<br>• Flame sensor incorrectly positioned in burner flame.<br>• Lazy burner flame due to improper gas pressure or combustion air. | • Clean flame sensor if coated or oxidized.<br>• Inspect flame sensor for proper alignment.<br>• Compare current gas pressure to rating plate and adjust as needed. | • Turn power OFF prior to repair.<br>• Clean flame sensor with steel wool.<br>• See “Vent/Flue Pipe” section for piping details.<br>• See rating plate for proper gas pressure. |
| Furnace fails to operate. | EE7 | Problem with igniter circuit. | • Improperly connected igniter.<br>• Shorted igniter.<br>• Poor furnace ground.<br>• Igniter relay fault on integrated control module. | • Check and correct wiring from integrated control module to igniter.<br>• Replace shorted igniter.<br>• Check and correct furnace ground wiring.<br>• Check igniter output from control. Replace if necessary. | • Turn power OFF prior to repair.<br>• Replace igniter with correct replacement part.<br>• Replace control with correct replacement part. |

## TROUBLESHOOTING

| Symptom | LED Status | Fault Description | Possible Causes | Corrective Action(s) | Notes & Cautions |
|---|---|---|---|---|---|
| Furnace fails to operate. | E10 | Grounding fault | • Poor neutral connection. | • Verify neutral wire connection to furnace and continuity to ground source. | • Turn power OFF prior to repair. |
| Furnace fails to operate. | E11 | Open rollout switch. | • Gas pressure too high.<br>• Burners mis-aligned.<br>• Restricted heat exchanger or venting. | • Check and correct gas pressure.<br>• Check and correct burner alignment.<br>• Check and correct restriction | • Turn power OFF prior to repair. |
| Furnace fails to operate. | E12 | Redundant relay open alarm. | | • Replace integrated control board. | • Turn power OFF prior to repair.<br>• Replace the integrated control board with proper replacement part. |
| Furnace fails to operate. | E13 | Redundant relay stuck closed alarm. | | • Replace integrated control board. | • Turn power OFF prior to repair.<br>• Replace the integrated control board with proper replacement part. |
| | E14 | External Flash Fault | • Data error in storage function (fault history, system status, etc.) | • Replace integrated control board if fault code does not reset. | • Turn power OFF prior to repair.<br>• Replace the integrated control board with proper replacement part. |
| External return air temperature reading not visible on CoolCloud app | E15 | Return Air Temperature Sensor Circuit is Open (External) | | NOTE: Allow time as the control may take up to 90 seconds to detect sensors.<br><br>• Verify that the sensor probe is plugged in all the way<br>• Verify that the sensor probe connector is properly crimped.<br>• Verify that resistance across the sensor probe is 10kΩ at 77°F. Resistance is lower at temperatures higher than 77°F. Resistance is higher at temperatures lower than 77°F.<br>• Replace PCB | • Turn power OFF prior to repair. |

## TROUBLESHOOTING

| Symptom | LED Status | Fault Description | Possible Causes | Corrective Action(s) | Notes & Cautions |
|---|---|---|---|---|---|
| External return air temperature reading not visible on CoolCloud app | E16 | Return Air Temperature Sensor Circuit is Shorted (External) | | • Check sensor probe terminals & conductors for electrical short.<br>• Check PCB connector for shorts if sensor short error reported when sensor probe is not plugged in.<br>• Replace PCB | • Turn power OFF prior to repair. |
| Supply air temperature reading not visible on CoolCloud app | E17 | Supply Air Temperature Sensor Circuit is Open (External) | | NOTE: Allow time as the control may take up to 90 seconds to detect sensors.<br><br>• Verify that the sensor probe is plugged in all the way<br>• Verify that the sensor probe connector is properly crimped.<br>• Verify that resistance across the sensor probe is 10kΩ at 77°F. Resistance is lower at temperatures higher than 77°F. Resistance is higher at temperatures lower than 77°F.<br>• Replace PCB | • Turn power OFF prior to repair. |
| Supply air temperature reading not visible on CoolCloud app | E18 | Supply Air Temperature Sensor Circuit is Shorted (External) | | • Check sensor probe terminals & conductors for electrical short.<br>• Check PCB connector for shorts if sensor short error reported when sensor probe is not plugged in.<br>• Replace PCB | • Turn power OFF prior to repair. |
| Onboard return air temperature reading not visible on CoolCloud app | E19 | Onboard return air temperature sensor is unplugged | | • Power cycle the furnace, the control may take up to 90 seconds to detect sensors<br>• Check PCB for any visible electrical or mechanical damage to onboard sensor (R311).<br>• Replace PCB | • Turn power OFF prior to repair. |

## TROUBLESHOOTING

| Symptom | LED Status | Fault Description | Possible Causes | Corrective Action(s) | Notes & Cautions |
|---|---|---|---|---|---|
| Onboard return air temperature reading not visible on CoolCloud app | E1A | Onboard return air temperature sensor is shorted. | | • Power cycle the furnace, the control may take up to 90 seconds to detect sensors<br>• Ensure there are no foreign objects on the PCB that could cause an electrical short at onboard sensor (R311).<br>• Replace PCB | • Turn power OFF prior to repair. |
| Furnace fails to operate. | E1b | Analog Pressure Sensor reference error. | • 5VDC reference voltage out of range (5.0 +/- 0.2 VDC for 5 seconds). | • Check Red, Black, White harness and connections to the inducer and integrated control board.<br>• Replace pressure sensor. | • Turn power OFF prior to repair. |
| Furnace fails to operate. | E1C | Analog Pressure Sensor null error. | • Pressure Sensor voltage out of range when inducer is off. | • Check Red, Black, White harness and connections to the inducer and integrated control board.<br>• Check pressure hoses to pressure sensor and pressure switch. | • Turn power OFF prior to repair. |
| Furnace fails to operate. | E1d | Analog Pressure Sensor span error. | • Pressure sensor out of range when pressure switch is closed.<br>• Pressure switch opens and closes outside of expected pressure sensor range. | • Check Red, Black, White harness and connections to the inducer and integrated control board.<br>• Check pressure hoses to pressure sensor and pressure switch.<br>• Replace pressure switch if error continues. | • Turn power OFF prior to repair.<br>• Replace pressure switch with proper replacement part. |
| Furnace fails to operate. | E1E | Analog Pressure Sensor pressure error. | • Inducer RPM has reached its limit.<br>• Blocked flue pipe. | • Check Red, Black, White harness and connections to the inducer and integrated control board.<br>• Check flue piping for blockage, proper length, elbows and termination.<br>• Replace pressure sensor if necessary. | • Turn power OFF prior to repair. |
| Furnace fails to operate. | E1F | Analog Pressure Sensor input error. | • Wrong pressure sensor installed. | • Check Red, Black, White harness and connections to the inducer and integrated control board.<br>• Replace pressure sensor. | • Turn power OFF prior to repair.<br>• Replace pressure sensor with proper replacement part. |

## TROUBLESHOOTING

| Symptom | LED Status | Fault Description | Possible Causes | Corrective Action(s) | Notes & Cautions |
|---|---|---|---|---|---|
| Furnace fails to operate. | EbF | Inducer communication alarm | • Loose wiring connections from the integrated control board to the inducer. | • Check Red, Black, White harness and connections to the inducer and integrated control board. | • Turn power OFF prior to repair. |
| Furnace fails to operate. | EEA | Polarity if 120 volt AC is reversed. | • Polarity of 120 volt AC power to furnace or integrated control module is reversed.<br>• Poor furnace ground. | • Review wiring diagram to correct polarity.<br>• Verify proper ground. Correct if necessary.<br>• Check and correct wiring. | • Turn power OFF prior to repair. |
| Furnace fails to operate. | EEb | Gas valve is not energized when it should be.<br>External gas valve error. | • Miswired gas valve circuit.<br>• Open gas valve circuit.<br>• Gas valve relay on integrated control board stuck open. | • Check wiring in gas valve circuit.<br>• Replace integrated control board. | • Turn power OFF prior to repair. |
| Furnace fails to operate. | EEC | Gas valve is energized when it should not be.<br>Internal gas valve error. | • Miswired gas valve circuit.<br>• Shorted gas valve wiring.<br>• Gas valve relay on integrated control board stuck open. | • Check wiring in gas valve circuit.<br>• Replace integrated control board. | • Turn power OFF prior to repair. |
| Furnace fails to operate. | EEd | Aux limit switch open (blower compartment). | • 120 volt power supply was shut off during heat cycle.<br>• Insufficient conditioned air over the heat exchanger. Blocked filters, restrictive ductwork, improper circulator blower speed or failed circulator blower motor. | • Check filters and ductwork for blockage. Clean filters or remove obstruction.<br>• Check circulator blower speed and performance. Correct speed or replace blower motor if necessary.<br>• Tighten or correct wiring connections. | • Turn power OFF prior to repair.<br>• See Specification Sheet applicable for your model for allowable temp rise range and proper circulator speed. |
| Furnace fails to operate. | EEF | AUX switch (condensate switch) open. | • High water level in evaporator coil drain pan or auxiliary drain pan | • Check evaporator coil drain pan, piping and auxiliary drain pan. | • Turn power OFF prior to repair. |
| Furnace stops heating and only the fan is operating. | EAF | Furnace has lost communication with the R-32 sensor and the furnace is in mitigation mode. | Furnace may not be paired with R-32 Cooling Unit. Refer to the R-32 Information Section.<br><br>• Loose or damaged R-32 sensor wire. | • Verify wire connection to R-32 sensor is not loose.<br>• Verify the R-32 sensor wire is not damaged.<br>• Replace R-32 sensor if necessary. | • Turn power OFF prior to repair.<br>• Replace R-32 sensor with proper replacement part. |

# TROUBLESHOOTING

| Symptom | LED Status | Fault Description | Possible Causes | Corrective Action(s) | Notes & Cautions |
|---|---|---|---|---|---|
| Furnace stops heating and only the fan is operating. | EA0 | R-32 sensor has detected a refrigerant leak and furnace is in mitigation mode. | | • Investigate the indoor coil for a refrigerant leak.<br>• Furnace will resume normal operation once a leak is not detected and the 5 minute delay period is over. | • Turn power OFF prior to repair. |
| Furnace stops heating and only the fan is operating. | EA1 | R-32 sensor has detected a fault and furnace is in mitigation mode. | | • Investigate the R-32 sensor.<br>• Replace the R-32 sensor if necessary. | • Turn power OFF prior to repair.<br>• Replace R-32 sensor with proper replacement part. |
| Furnace stops heating and only the fan is operating. | EA2 | A2L relay in the furnace control board has detected a fault and furnace is in mitigation mode. | | • Investigate the A2L relay.<br>• Cycle power to the furnace.<br>• Replace the integrated control board if necessary. | • Turn power OFF prior to repair.<br>• Replace the integrated control board with proper replacement part. |

**Fault Code Recall**
Accessing the furnace's diagnostic menu provides access to the last ten faults detected by the furnace. Faults are stored most recent to least recent, Any consecutively repeated fault is stored a maximum of three times. Example: A clogged return air filter causes the furnace limit to trip repeatedly. The control will only store this fault the first three consecutive times the fault occurs. **NOTE: It is highly recommended that the fault history be cleared when performing maintenance or servicing the furnace.**

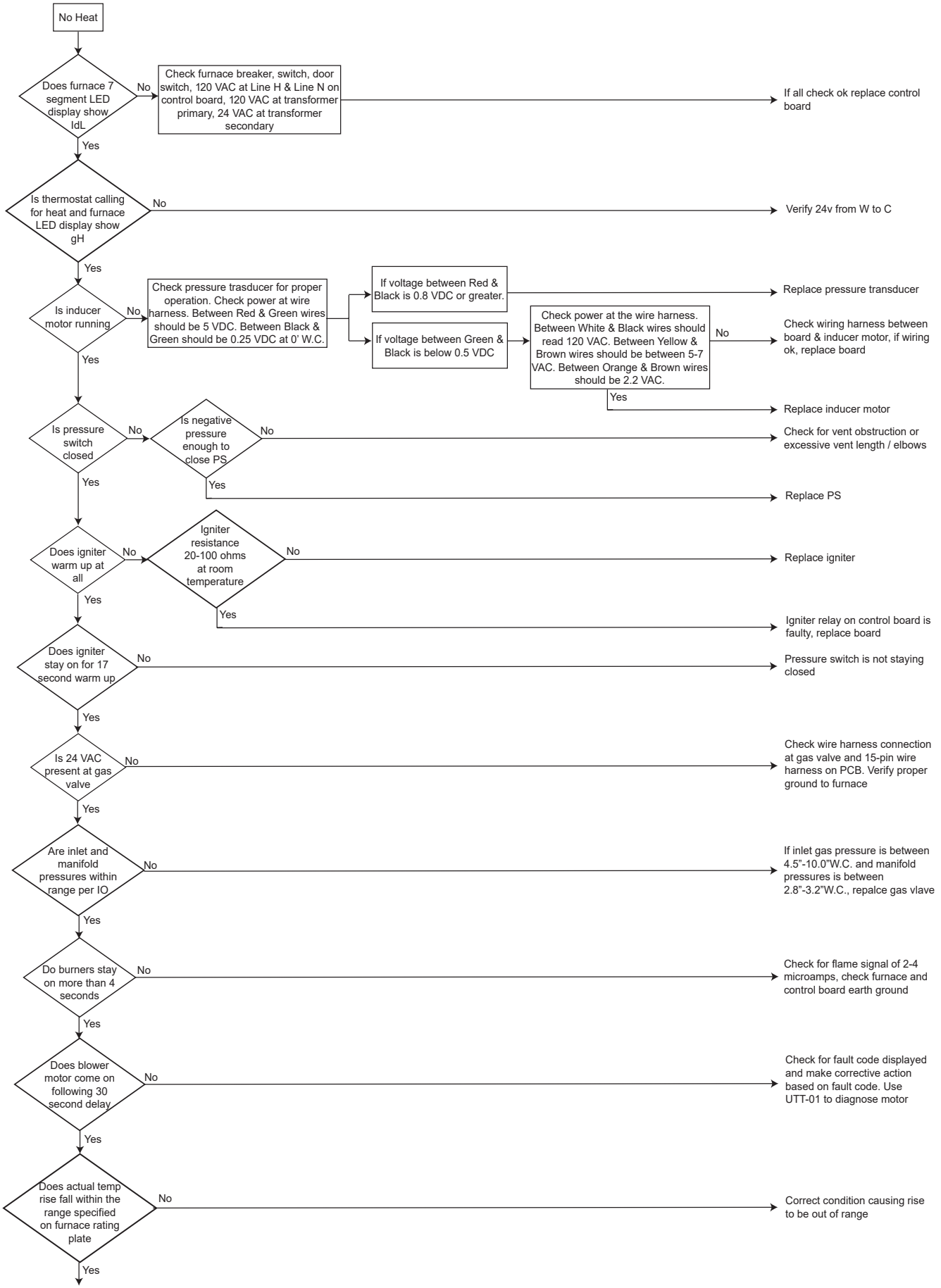
No Heat
Does furnace 7 segment LED display show IdL
No
Check furnace breaker, switch, door switch, 120 VAC at Line H & Line N on control board, 120 VAC at transformer primary, 24 VAC at transformer secondary
If all check ok replace control board
Yes
Is thermostat calling for heat and furnace LED display show gH
No
Verify 24v from W to C
Yes
Is inducer motor running
No
Check pressure trasducer for proper operation. Check power at wire harness. Between Red & Green wires should be 5 VDC. Between Black & Green should be 0.25 VDC at 0' W.C.
If voltage between Red & Black is 0.8 VDC or greater.
Replace pressure transducer
If voltage between Green & Black is below 0.5 VDC
Check power at the wire harness. Between White & Black wires should read 120 VAC. Between Yellow & Brown wires should be between 5-7 VAC. Between Orange & Brown wires should be 2.2 VAC.
No
Check wiring harness between board & inducer motor, if wiring ok, replace board
Yes
Replace inducer motor
Yes
Is pressure switch closed
No
Is negative pressure enough to close PS
No
Check for vent obstruction or excessive vent length / elbows
Yes
Replace PS
Yes
Does igniter warm up at all
No
Igniter resistance 20-100 ohms at room temperature
No
Replace igniter
Yes
Igniter relay on control board is faulty, replace board
Yes
Does igniter stay on for 17 second warm up
No
Pressure switch is not staying closed
Yes
Is 24 VAC present at gas valve
No
Check wire harness connection at gas valve and 15-pin wire harness on PCB. Verify proper ground to furnace
Yes
Are inlet and manifold pressures within range per IO
No
If inlet gas pressure is between 4.5"-10.0"W.C. and manifold pressures is between 2.8"-3.2"W.C., repalce gas vlave
Yes
Do burners stay on more than 4 seconds
No
Check for flame signal of 2-4 microamps, check furnace and control board earth ground
Yes
Does blower motor come on following 30 second delay
No
Check for fault code displayed and make corrective action based on fault code. Use UTT-01 to diagnose motor
Yes
Does actual temp rise fall within the range specified on furnace rating plate
No
Correct condition causing rise to be out of range
Yes

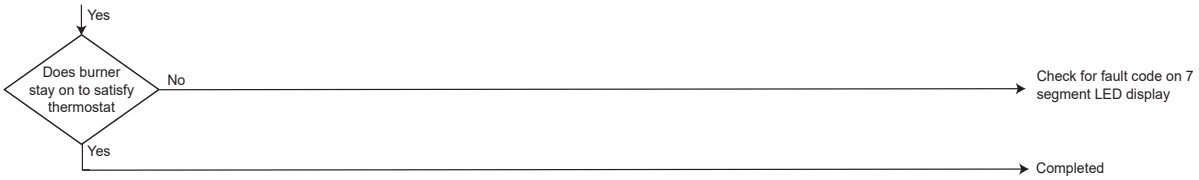
Yes
Does burner stay on to satisfy thermostat
No
Check for fault code on 7 segment LED display
Yes
Completed

Error Code:
B0 - Circulator blower motor not running when it should be running.

B1 - Integrated control module has lost communications with circulator blower motor.

Applicable Models:
(for Goodman Amana Brand)
*RVS-U, *DVT, *RVT, *DVM, *RVM

(for Daikin)
DR**SC-U, *DD**VT, *DR**VT, DD97MC, DR97MC

Method of Error Detection:
B0 - High voltage to the motor, no DC voltage to the motor or no communication to blower motor.

B1 - Bad ground or no communication to blower motor.

Error Decision Conditions:
Primary voltage to blower motor out of range.
Missing DC voltage between pins 1 and 4.

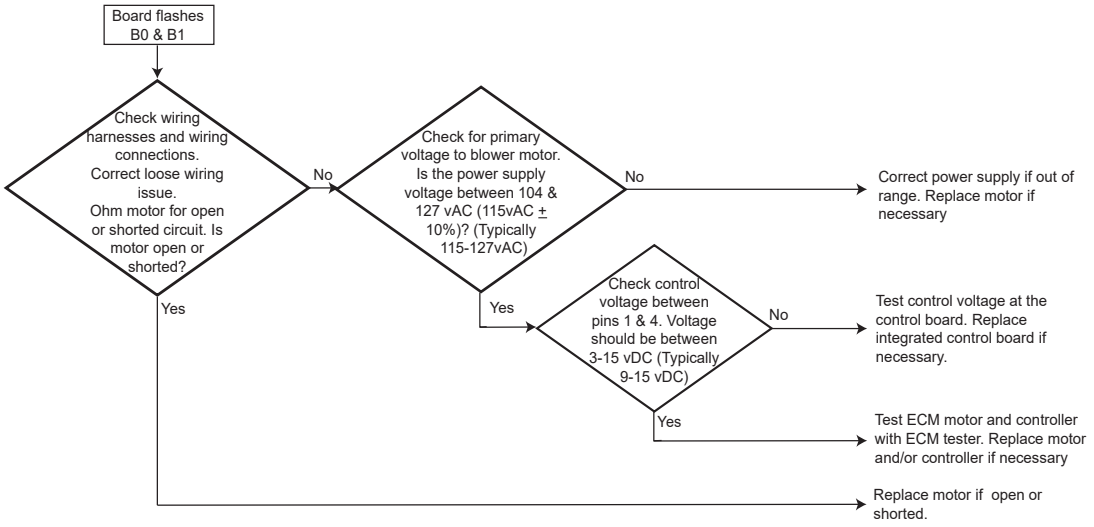

Error Code:
B2 - Circulator blower motor HP in shared data set does not match circulator blower motor HP.

B3 - Circulator blower motor is operating in a power, temperature or speed limiting condition.

B4 - Circulator blower motor senses a loss of rotor control or high current.

B5 - Circulator blower motor fails to start 10 consecutive times.

B6 - Circulator blower motor shuts down due to over or under voltage condition, or over temperature condition.

B9 - Airflow is lower than demanded.

Applicable Models:
(for Goodman/Amana Brand)
*RVS80-U, *RVS96-U, *DVT, *RVT, *DVM97, *RVM97

(for Daikin)
DR**SC-U

Method of Error Detection:
Wrong horsepower blower motor, primary voltage to motor is out of range, high temperature, high amp draw blower motor failure.

Error Decision Conditions:
Wrong horsepower blower motor, primary voltage to motor is out of range, high temperature, high amp draw blower motor failure.

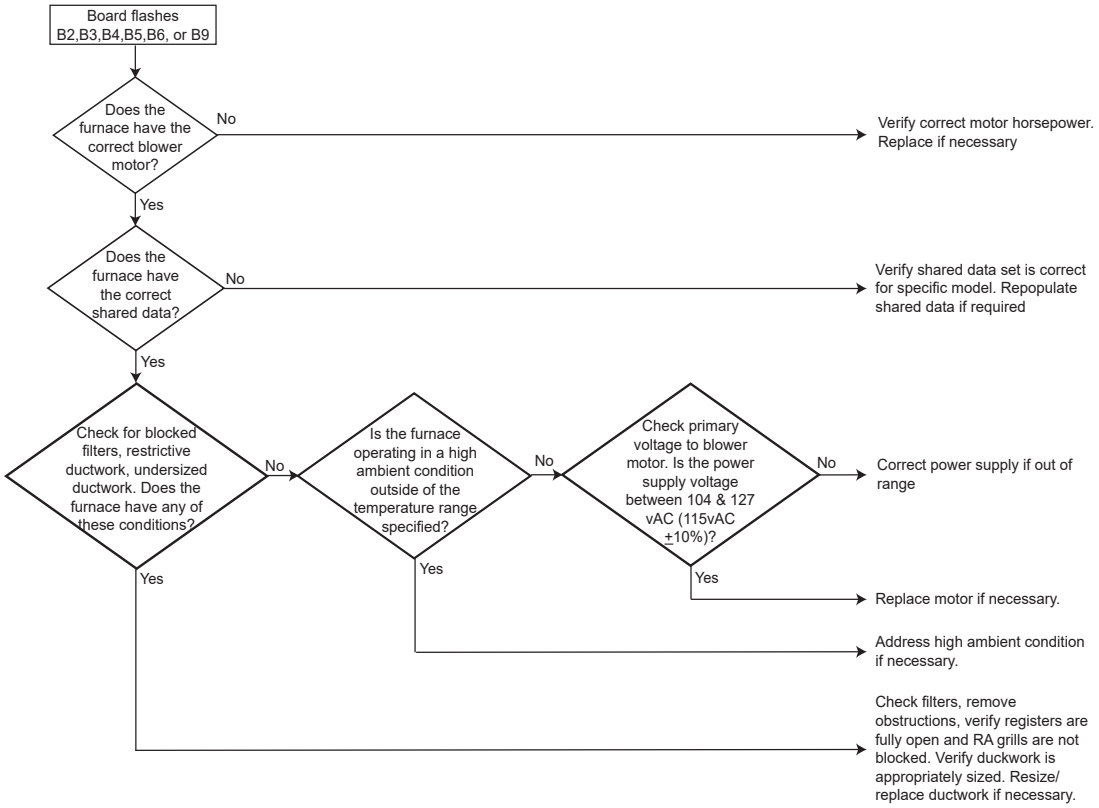

Error Code:
E0 - Lockout due to an excessive number of ignition retries (3 total)

Applicable Models:
All 80% models

Method of Error Detection:
Furnace fails to ignite after 3 retires

Error Decision Conditions:
No gas or low gas pressure at manifold. Bad hot surface ignitor - not glowing, dirty flame sensor

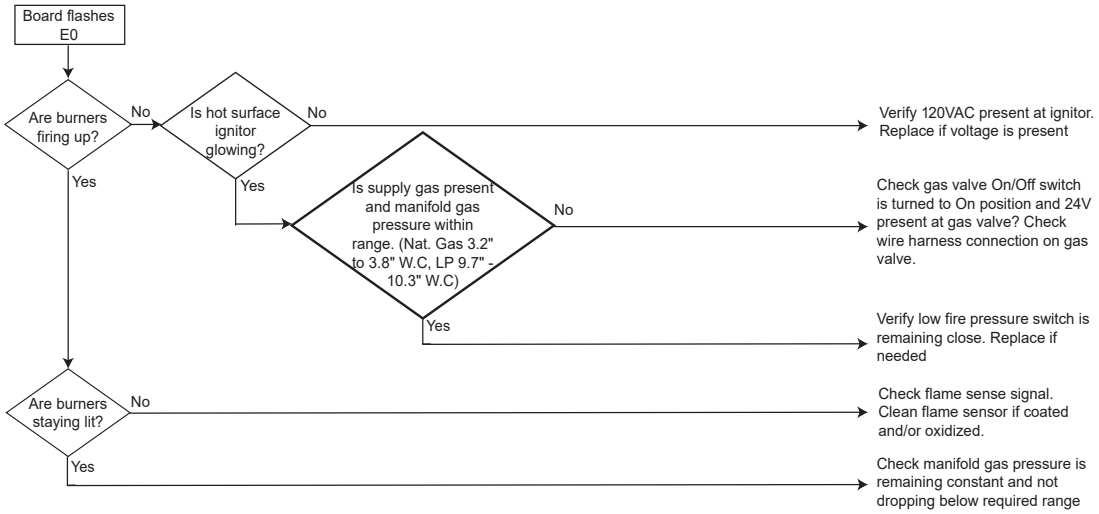

Error Code:
E3 - Primary limit circuit is open.

Applicable Models:
All furnace models

Method of Error Detection:
Temperature across primary limit during heating operation.

Error Decision Conditions:
During heating operation, primary limit break temperature has opened the primary limit circuit.

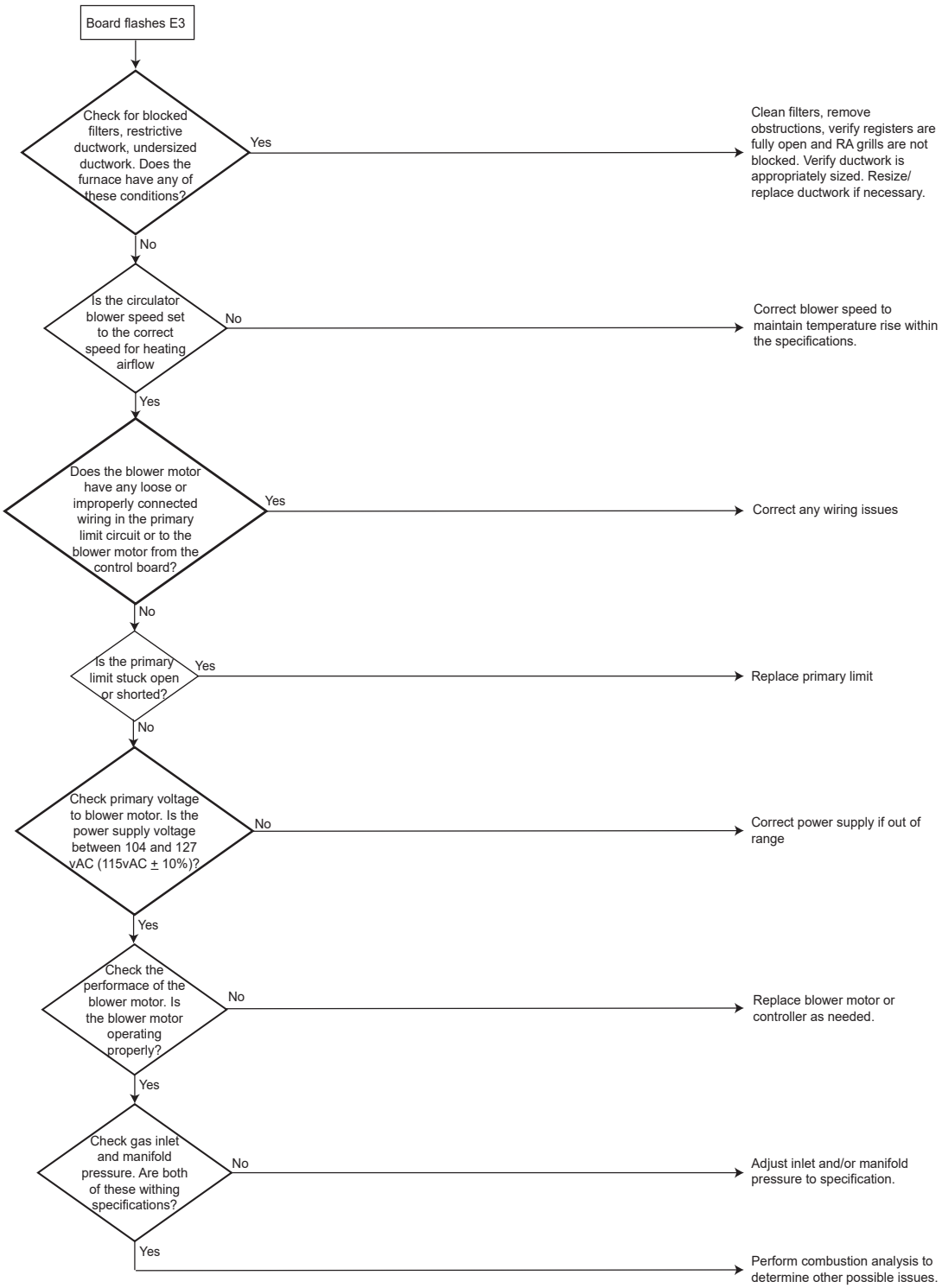

Error Code:
E4 - Flame sensed with no call for heat.

E6 - Flame sense micro amp signal is minimal.

Applicable Models:
All furnace models

Method of Error Detection:
Micro amp signal from flame sensor.

Error Decision Conditions:
Micro amp reading with no call for heat.
Low micro amp reading after furnace ignition.

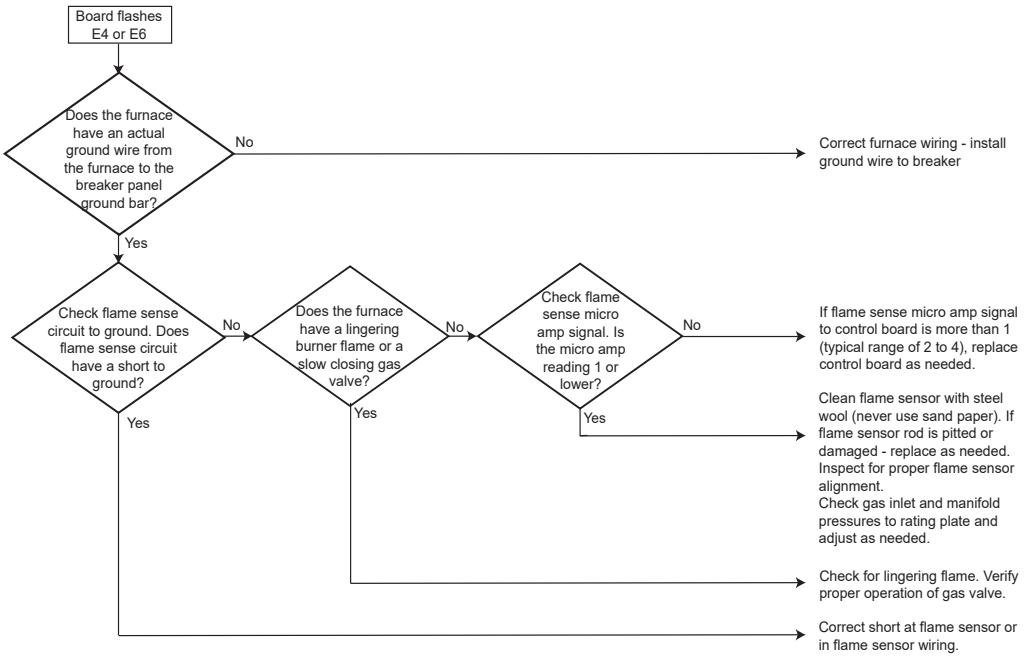

**Error Code:**
Eb - Gas valve is not energized when it should be. External Gas Valve Error.

EC - Gas valve is energized when it should not be. Internal Gas Valve Error.

**Applicable Models:**
(for Goodman/Amana Brand)
All furnace models

(for Daikin)
All furnace models, except Daikin modulating furnaces

**Method of Error Detection:**
No voltage to gas valve when voltage should be present.
Voltage to gas valve with no call for heat.

**Error Decision Conditions:**
No voltage reading at gas valve with a call for heat.
Voltage reading at gas valve with no call for heat.

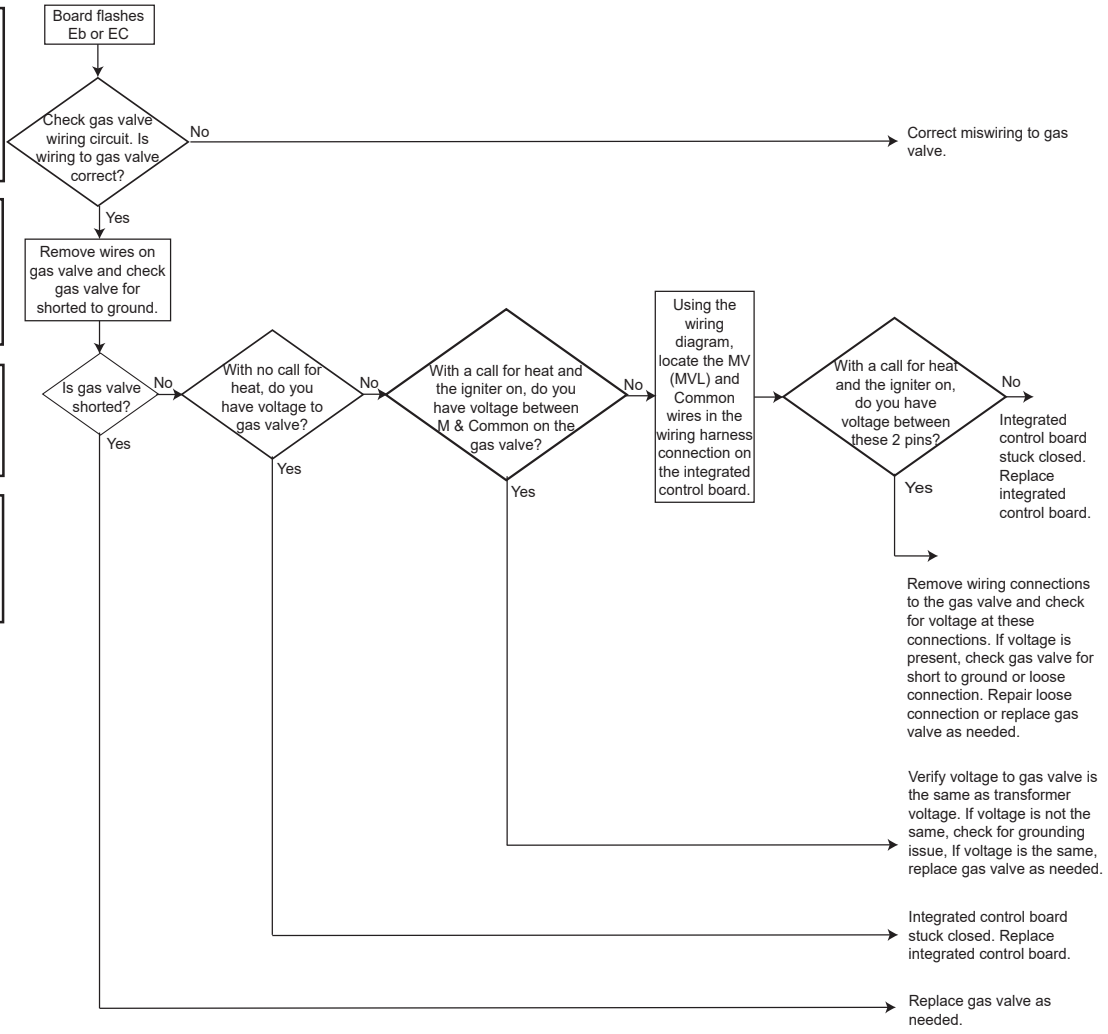

# TROUBLESHOOTING

| MODEL/TEMP RISE RANGE (MID-RISE) | *RVS800604BU 20-50 (35) | | *RVS800805CU 35-65 (50) | |
|---|---|---|---|---|
| | CFM | RISE | CFM | RISE |
| Recommended CFM for Heat & Expected Temperature Rise | 1270 | 35 | 1200 | 50 |
| Lowest Recommended Heating CFM & Expected Temperature Rise | 1140 | 40 | 1080 | 55 |

**NOTE:** To Set Heating CFM Using Push Buttons;
1. Scroll using Left or Right push buttons until gTF appears on the 7 segment display.
2. Press & release center button & display will show current heating airflow trim expressed as a percentage of max CFM.
3. Press & release Left or Right button until desired percentage appears.
4. Press & release center button once more to select the displayed percentage.
5. * in front of model name represents Amana/Goodman brand.

***RVS800604BU**
**COOLING SPEED**
**(@ 0.1" - 0.8" w.c. ESP)**

| Tons | High-Stage Cfm | Low-Stage CFM |
|---|---|---|
| 2 | 800 | 560 |
| 2.5 | 1,000 | 700 |
| 3 | 1,200 | 840 |
| 4 | 1,600 | 1,120 |
| MAX | 1,760 | |

***RVS800805CU**
**COOLING SPEED**
**(@ 0.1" - 0.8" w.c. ESP)**

| Tons | High-Stage Cfm | Low-Stage CFM |
|---|---|---|
| 2 | 800 | 560 |
| 3 | 1,200 | 840 |
| 4 | 1,600 | 1,120 |
| 5 | 2.000 | 1,400 |
| MAX | 2,200 | |

**WARNING**

**HIGH VOLTAGE!**
**DISCONNECT ALL POWER BEFORE SERVICING OR INSTALLING THIS UNIT. MULTIPLE POWER SOURCES MAY BE PRESENT. FAILURE TO DO SO MAY CAUSE PROPERTY DAMAGE, PERSONAL INJURY OR DEATH.**

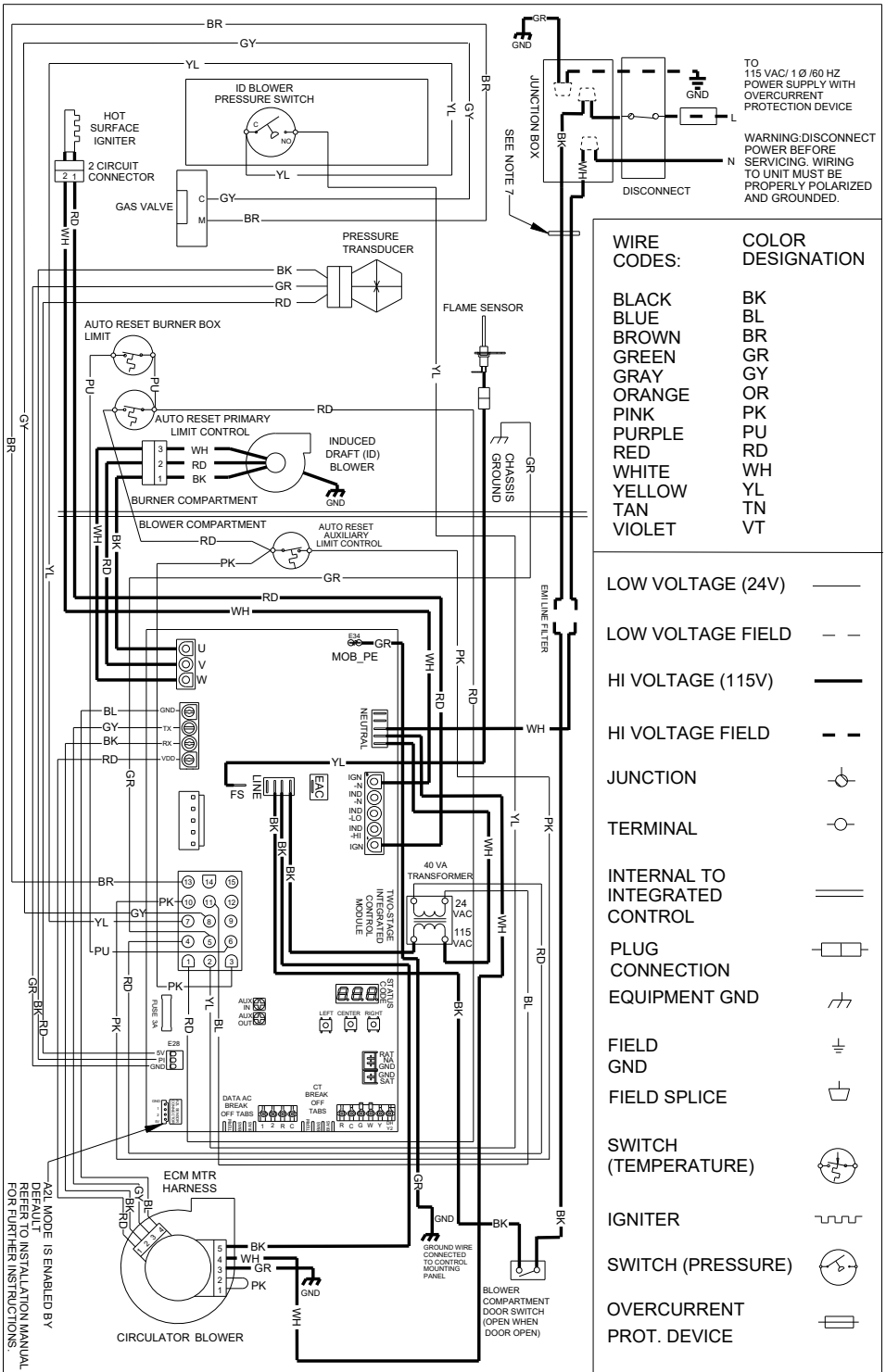


NOTES:
1. MANUFACTURER'S SPECIFIED REPLACEMENT PARTS MUST BE USED WHEN SERVICING.
2. IF ANY OF THE ORIGINAL WIRE AS SUPPLIED WITH THE FURNACE MUST BE REPLACED, IT MUST BE REPLACED WITH WIRING MATERIAL HAVING A TEMPERATURE RATING OF AT LEAST 105° C. USE COPPER CONDUCTORS ONLY.
3. UNIT MUST BE PERMANENTLY GROUNDED AND CONFORM TO N.E.C. AND LOCAL CODES.
4. TO RECALL THE LAST 6 FAULTS, MOST RECENT TO LEAST RECENT, DEPRESS SWITCH FOR MORE THAN 2 SECONDS WHILE IN STANDBY (NO THERMOSTAT INPUTS)
5. HUMIDIFIER INSTALLATION OPTIONS: USE HUM TERMINAL TO RUN HUMIDIFIER DURING HEAT CALL (COMMUNICATING OR LEGACY MODES). USE HUM-IN AND HUM-OUT TERMINALS TO RUN HUMIDIFIER DURING HEAT CALL (COMMUNICATING MODE OR LEGACY MODE) OR INDEPENDENTLY FROM HEAT CALL (COMMUNICATING MODE ONLY - SETUP IS DONE WITHIN COMMUNICATING THERMOSTAT)
6. WHEN THIS FURNACE IS PAIRED WITH NON R-32 REFRIGERANT SYSTEMS, DEFAULT SETTINGS WILL NEED TO BE CHANGED. REFER TO INSTALLATION MANUAL FOR FURTHER INSTRUCTIONS.
7. FERRITE CORE INSTALLED AT THIS LOCATION. ONLY APPLICABLE TO SOME MODELS.

0140F20068-A

Wiring is subject to change. Always refer to the wiring diagram on the unit for the most up-to-date wiring.