

OWNER'S MANUAL

HRX217HZA
LAWN MOWER

Before operating the mower for the first time, please read this Owner's Manual. Even if you have operated other mowers, take time to become familiar with how this mower works and practice in a safe area until you build up your skills.

QUICK FIND

Air Filter 12	Charging the Battery 14	How to Contact Honda 20
Add Fuel 7	Check the Oil Level 6	Maintenance Schedule 10
Operating the Controls 8	Cleaning 15	Oil Change 12
Blade Inspection 11	Dealer Locator Information 20	Spark Plug 13

CONTENTS

FOR YOUR SAFETY 2
PARTS AND CONTROLS 3
INITIAL MOWER SETUP 3
- List of Parts 3
- Adjust the Handlebar 3
- Add Engine Oil 4
- Assemble the Grass Bag 4

BEFORE EACH OPERATION 4
- Check Your Mower 4
- Check Your Mowing Area 4
- Clip Director® 5
- Rear Shield 5
- Grass Bag 6
- Cutting Height Adjustment 6
- Check the Oil Level 6
- Add Fuel 7

OPERATION 7
- Safe Mowing Practices 7
- Operating the Controls 8
- Starting the Engine 9
- Stopping the Engine 9

SERVICING YOUR MOWER 9
- Maintenance Safety 9
- Maintenance Schedule 10
- Blade Inspection 11
- Blade Mounting Bolt Inspection 11
- Blade Replacement 11
- Oil Change 12
- Air Filter 12
- Spark Plug 13
- Spark Arrester (optional part) ... 13
- Charging the Battery 14
- Replacing the Battery 14

TRANSPORTING 14
STORAGE 15
- Fuel 15
- Cleaning 15
- Oil 15
- Storage Location 15
- Handlebar 15
- Removing From Storage 15

TROUBLESHOOTING 16
- Engine Will Not Start 16
- Loss of Power 16
- Vibration 16
- Mowing and Bagging Problems 16

TECHNICAL INFORMATION 17
- Serial Number Locations 17
- High Altitude Operation 17
- Emission Control System 17
- Air Index 18
- Specifications 18

AVOIDING FUEL-RELATED PROBLEMS 19
CUSTOMER INFORMATION 20
- Parts, Accessories, and Service Items 20
- Dealer Locator Information 20
- How to Contact Honda 20
- Honda Publications 20

DISTRIBUTOR'S LIMITED WARRANTY . 21
EMISSION SYSTEM WARRANTY 22
PRODUCT REGISTRATION 23

QUESTIONS?

Contact your Honda dealer.

There is a dealer locator at powerequipment.honda.com

HONDA Power Equipment

00X31VH7 L092

© 2004-2018 American Honda Motor Co., Inc.—All Rights Reserved

WELCOME

Congratulations on your selection of a Honda lawn mower! We are certain you will be pleased with your purchase of one of the finest lawn mowers on the market. We want to help you get the best results from your new mower and to operate it safely. This manual contains information on how to do that; please read it carefully.

When your mower needs scheduled maintenance, keep in mind that Honda Power Equipment servicing dealership personnel are specially trained in servicing Honda mowers and are supported by the parts and service divisions of American Honda.

Please read the *DISTRIBUTOR'S LIMITED WARRANTY* on page 21 and the *EMISSION CONTROL SYSTEM WARRANTY* on page 22 to fully understand what is covered by warranty and your responsibilities of ownership.

FOR YOUR SAFETY

Your safety and the safety of others are very important. We have provided important safety messages in this manual and on the mower. This information alerts you to potential hazards that could hurt you or others. Please read these messages carefully.

Of course, it is not practical or possible to warn you about all the hazards associated with operating or maintaining a lawn mower. You must use your own good judgment.

Safety Instructions

You will find important safety information in a variety of forms:

- **Safety Labels** – on the lawn mower
- **Instructions** – how to use this mower correctly and safely
- **Safety Messages** – preceded by a safety alert ⚠ symbol and one of three signal words: DANGER, WARNING, or CAUTION.
  Each message tells you what the hazard is, what can happen, and what you can do to avoid or reduce injury.
  These signal words mean:

⚠ **DANGER**	You **WILL** be KILLED or SERIOUSLY HURT if you don't follow instructions.
⚠ **WARNING**	You **CAN** be KILLED or SERIOUSLY HURT if you don't follow instructions.
⚠ **CAUTION**	You **CAN** be HURT if you don't follow instructions.

- **Damage Prevention Messages** – you will also see other important messages that are preceded by the word NOTICE. This word means:

NOTICE	Your engine, other property, or the environment can be damaged if you don't follow instructions.

⚠ WARNING

The engine exhaust from this product contains chemicals known to the State of California to cause cancer, birth defects, or other reproductive harm.

California Proposition 65
This product contains or emits chemicals known to the State of California to cause cancer, birth defects, or other reproductive harm.

Important Message to Parents

The safety of your children is very important to Honda. Lawn mowers are tools, not toys. As with any equipment, bad judgments can result in serious injuries. Your child must be big enough, strong enough, and have the coordination necessary to comfortably reach and operate the controls. Anyone who takes unnecessary risks and doesn't obey rules should not operate this lawn mower.

Safety Label Locations

These labels warn you of potential hazards that can cause serious injury. Read them carefully. If a label comes off or becomes hard to read, contact an authorized Honda servicing dealer for a replacement.

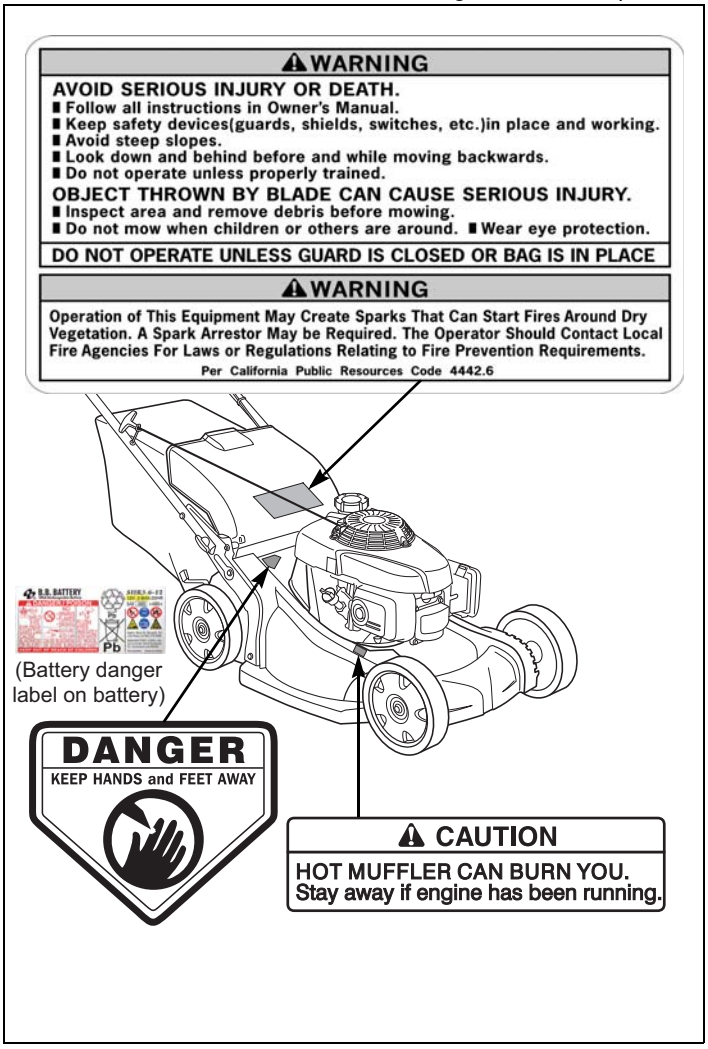

PARTS AND CONTROLS

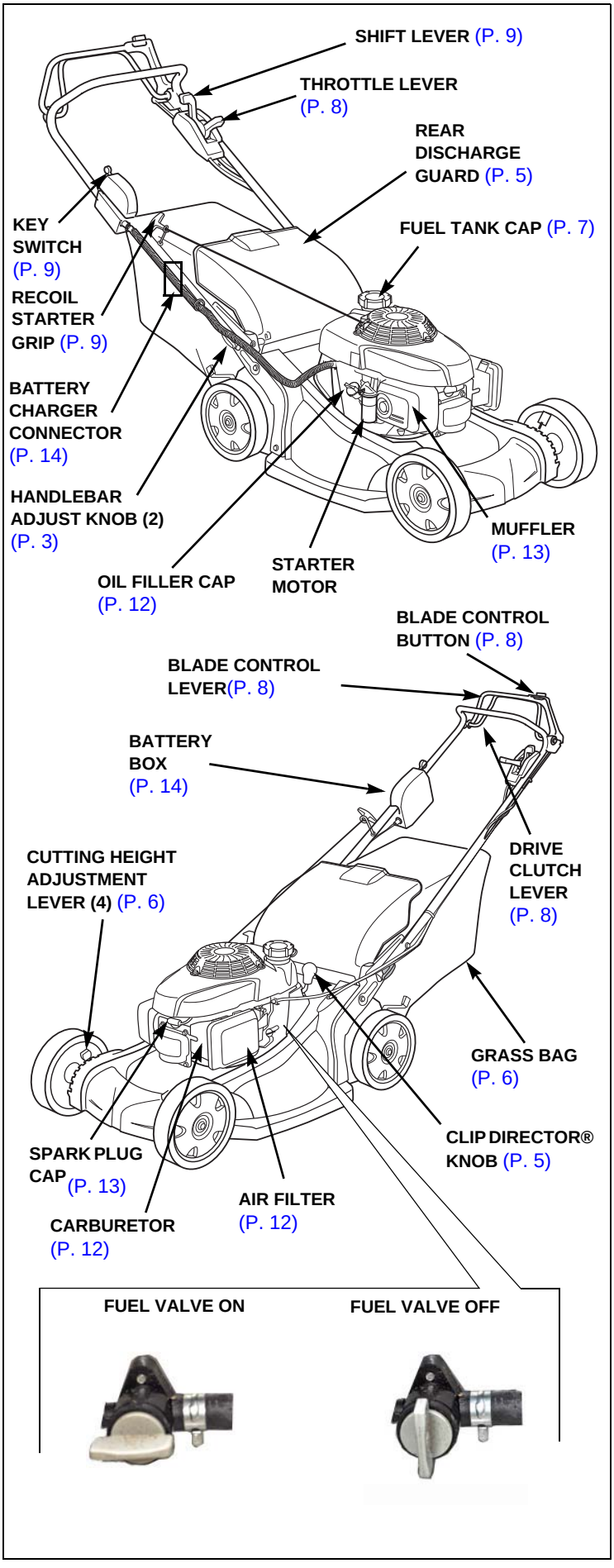

INITIAL MOWER SETUP

List of Parts

With help from an assistant, carefully remove the mower and loose parts from the carton and compare the loose parts against the following list. Contact the authorized Honda dealer from whom you purchased the mower if any of the loose parts shown are not included with your mower.

Ref. No.	Description	Qty.
①	Grass bag frame	1
②	Grass bag	1
③	Engine oil, key, and owner's manual	1

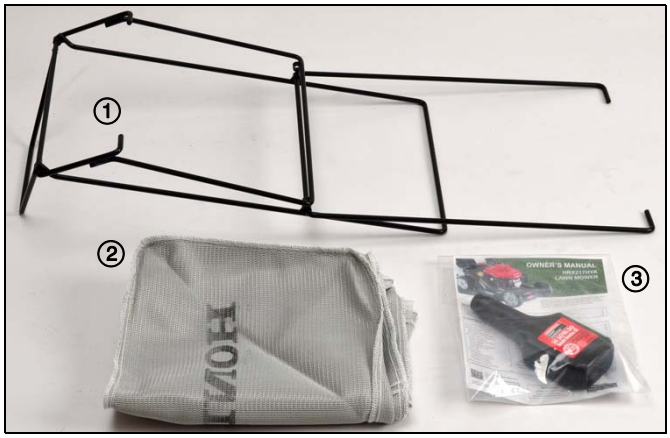

Adjust the Handlebar

1. With the handlebar adjust knobs in the unlocked position, raise the handlebar into the mowing position.

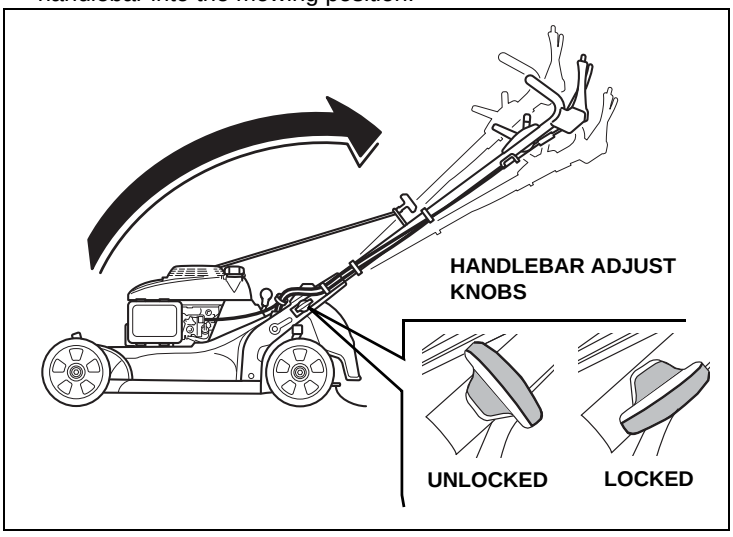

2. Align the adjust knobs with one of the three holes on each handle stay. Setting the adjust knobs in the lowest holes raises the handlebar to its highest position.
3. Turn the handlebar adjust knobs 90 degrees into the lock position, making sure both sides are positioned at the same height.
4. Remove all the cardboard from around the handlebar.

Add Engine Oil



The mower is shipped **WITHOUT OIL** in the engine. Remove the oil filler cap/dipstick and add the entire contents of the included bottle of oil into the oil filler opening.

All Honda engines are run at the factory prior to packaging. Most of the oil is removed prior to shipment; however, some oil remains in the engine. The amount of oil left in the engine varies.

If you don't use the supplied oil, add enough SAE 10W-30 API service category SJ or later oil to bring the oil level between the upper and lower limit marks on the dipstick—without screwing the dipstick in (approximately 12 to 13.5 ounces is required). See page 12.

Do not overfill the engine with oil. If the engine is overfilled, the excess oil may get transferred to the air cleaner housing and air filter. An indication of overfilling is white or blue smoke coming from the muffler when the engine is running.

After filling the engine with oil, screw the filler/cap dipstick in and remove the hang tag near the recoil starter grip that says "*The engine has no oil.*"

Assemble the Grass Bag

1. Turn the grass bag right-side out.
2. Pull the frame support legs outward and slide them into the eyelets as shown.
3. Install the assembled frame into the fabric grass bag, keeping the grass bag handle exposed.

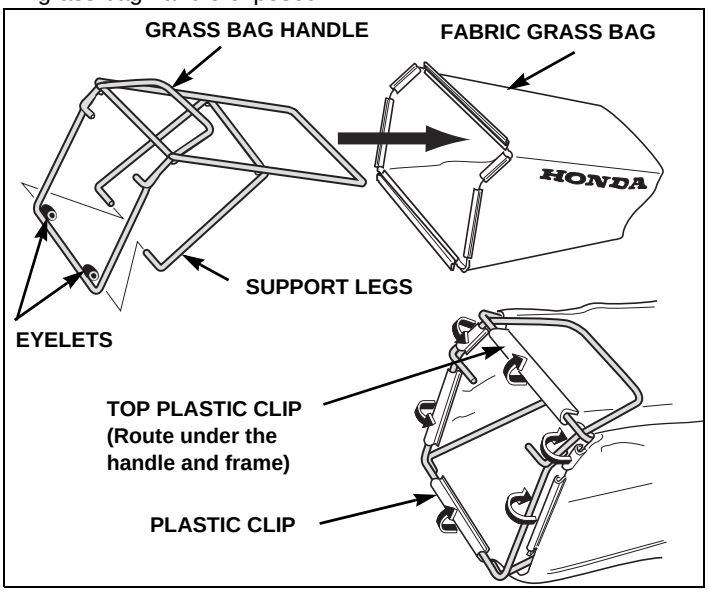

Please Register Your Mower

Please take a few minutes and register your purchase with Honda. You can register:

- By completing and mailing the registration card on the back cover of this book
- Going on-line to powerequipment.honda.com and clicking on Product Registration
- By scanning this QR code

Before Using Your Lawn Mower

All Mower operators must read the following sections:

- **FOR YOUR SAFETY** (page 2)
- **BEFORE EACH OPERATION** (page 4)
- **OPERATION** (page 7)
- **MAINTENANCE SCHEDULE** (page 10)

BEFORE EACH OPERATION

Your safety is your responsibility. A little time spent in preparation will significantly reduce your risk of injury.

Read and understand this manual. Know what the controls do and how to operate them.

Familiarize yourself with the lawn mower and its operation before you begin using it. Know how to quickly shut off the lawn mower in case of an emergency.

Check Your Mower

For your safety, and to maximize the service life of your lawn mower, it is very important to take a few moments before you operate the lawn mower to check its condition. Be sure to take care of any problem you find, or have your servicing dealer correct it, before you operate the lawn mower.

⚠ WARNING

Improperly maintaining this lawn mower, or failing to correct a problem before operation, could cause a significant malfunction.

Some malfunctions can seriously hurt or kill you.

Always perform a pre-operation inspection before each operation, and correct any problem.

- Make sure the lawn mower is on a level surface.
- Look around and underneath the lawn mower for signs of oil or gasoline leaks.
- Look for signs of damage.
- Check each control for proper operation.
- Check the blades for wear. Replace as necessary (page 11).
- Check that the blade bolts are tight (page 11).
- Check that all nuts, bolts, and screws are tightened.
- Check the air filter (page 12) and oil level (page 6).
- Check the fuel level (page 7). Starting with a full tank will help to eliminate or reduce operating interruptions for refueling.

Check Your Mowing Area

For your safety and the safety of others, always inspect the area before operating the lawn mower.

Anything that can be picked up by the blades and thrown is a potential hazard to you and others. Look for things like stones, sticks, nails, and wire, and remove them from the lawn area.

People and animals near the lawn area can move into your lawn mower's path or into a position where they could be struck by thrown objects. Clear the area of pets and people, especially children. Their safety is your responsibility.

Check the condition of the grass. Adjust your lawn mower ground speed and mowing swath accordingly.

Clip Director®

The Clip Director can be adjusted to any one of the ten positions to achieve the desired mowing results (bag, bag and mulch, or mulch).

To adjust the Clip Director knob, pull the knob downward and towards the rear of the mower. The knob adjusts a sliding door from the fully open BAG position to the fully closed MULCH position.

Some grass accumulation in the discharge opening is normal when the Clip Director is fully closed in the MULCH position. To remove this grass, close the discharge guard, fully open the Clip Director in the BAG position, engage the blade control lever, and start the engine.

If a high resistance is noticed when moving the Clip Director knob from side-to-side, excessive grass may have built up on top of the sliding door.

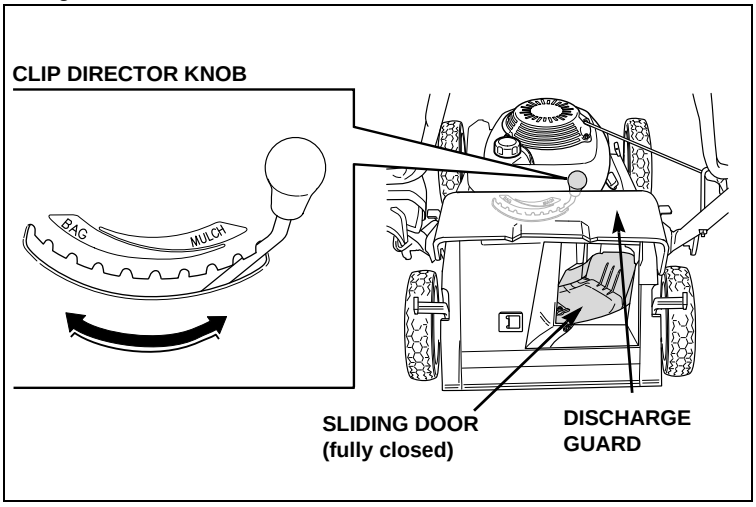

Important Safety Precaution

Always release the blade control lever and disconnect the spark plug cap (page 13) before lifting the discharge guard to view or clean around the sliding door. This will prevent contact with the rotating blades and prevent objects from being thrown into the discharge area.

Sliding Door Position

The sliding door can be positioned to produce different mowing results. If the preferred sliding door position is unknown, install the grass bag and begin mowing with the Clip Director knob all the way to the BAG position. Check the appearance of the lawn. As the knob is moved towards the MULCH position, more grass will be recycled back into the lawn. Adjust the Clip Director knob until the desired result is achieved.

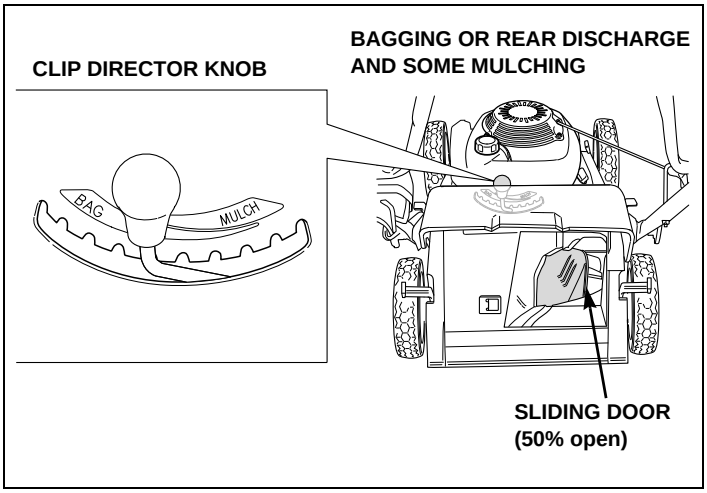

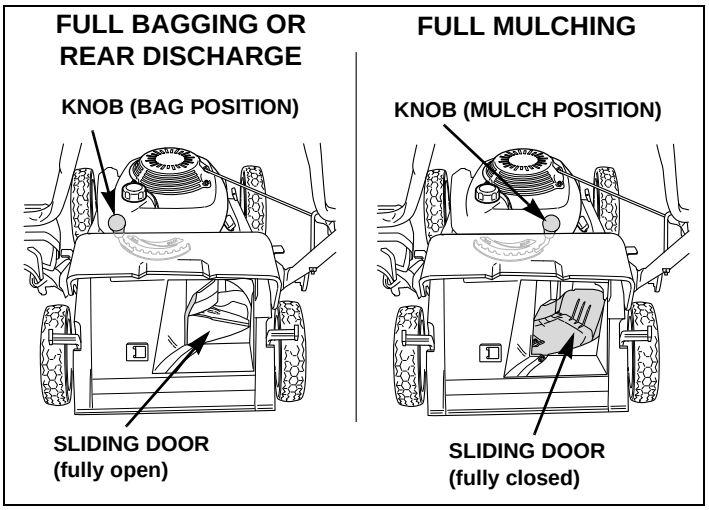

Rear Discharge

To discharge clippings to the rear, remove the grass bag and position the Clip Director knob in the BAG range. Maximum rear discharge will occur when the Clip Director knob is all the way to the left (BAG) position. As the Clip Director knob is moved toward the right (MULCH) position, less grass will be discharged through the rear discharge guard.

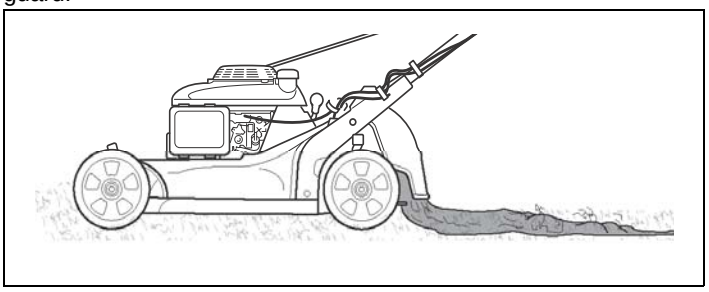

Fallen Leaves

Use the Clip Director to shred and collect fallen leaves for disposal. Set the front wheels so they are one or two settings higher than the rear. Set the Clip Director in position #9 (not quite full mulching), and adjust the setting from this point for best results.

Collecting leaves while they are damp will help to control dust and result in more effective mulching of the leaves.

Rear Shield

During normal use the rear shield is subject to deterioration and wear. Remove the grass bag and raise the discharge guard to check the rear shield for cracks or tears. If the rear shield is excessively worn, have it replaced by your authorized Honda servicing dealer.

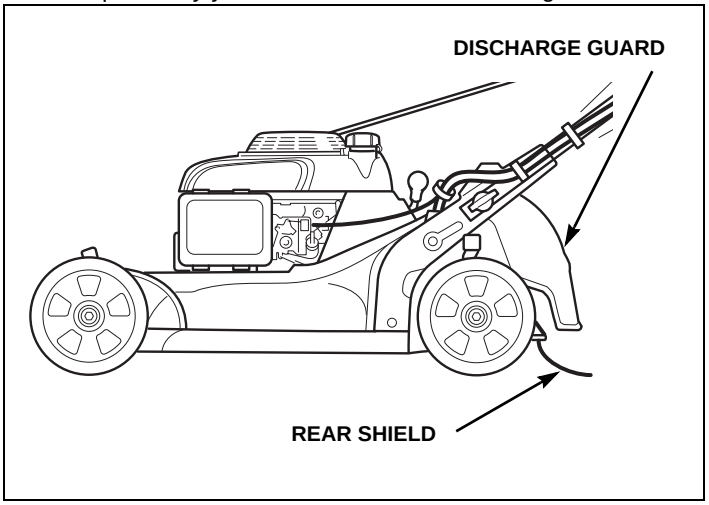

Grass Bag

A lawn mower works like a vacuum cleaner; it blows air through the bag fabric, which traps the grass clippings. Always empty the grass bag before it becomes filled to the limit of its capacity. Bagging performance will diminish after the bag becomes about 90% filled. Also, the bag is easier to empty when it is not packed full.

You can leave the grass bag on the mower during mowing, even when full mulching is selected.

To minimize dust and fine particles from passing through the grass bag fabric, it is best to mow grass in the morning when the ground is slightly damp and the grass is dry.

Inspection

During use, the grass bag material is subject to normal wear and tear.

⚠ CAUTION

An excessively worn grass bag may allow objects to be thrown toward the operator.

Thrown objects can hurt you.

Replace a worn grass bag to prevent possible injury.

Grass bag replacement is explained on page 4.

Installation

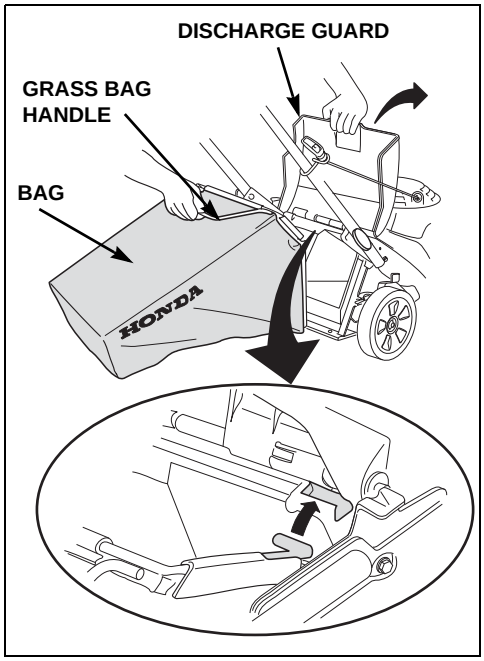

1. Raise the discharge guard and hook the grass bag onto the mower deck as shown.

   Clean any grass clippings from the hook channel.
2. Release the discharge guard to secure the grass bag.

Removal

1. Raise the discharge guard, grasp the grass bag handle, and remove the grass bag.
2. Release the discharge guard.
3. When the grass bag is clear of the discharge guard, you can lift it through the handlebar opening or remove it to the rear of the mower below the handlebar.

Cutting Height Adjustment

Each wheel of the mower can be adjusted to one of seven settings. The actual height of cut grass will vary with lawn and soil conditions.

Be sure the engine is not running when adjusting the cutting height.

To adjust cutting height, pull each adjustment lever toward the wheel, and move it into another notch.

Move all four adjustment levers to the same position, forward for tall grass and rearward for short grass.

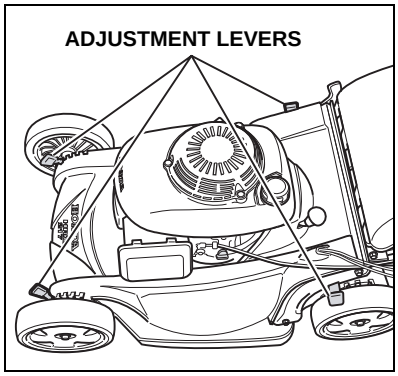

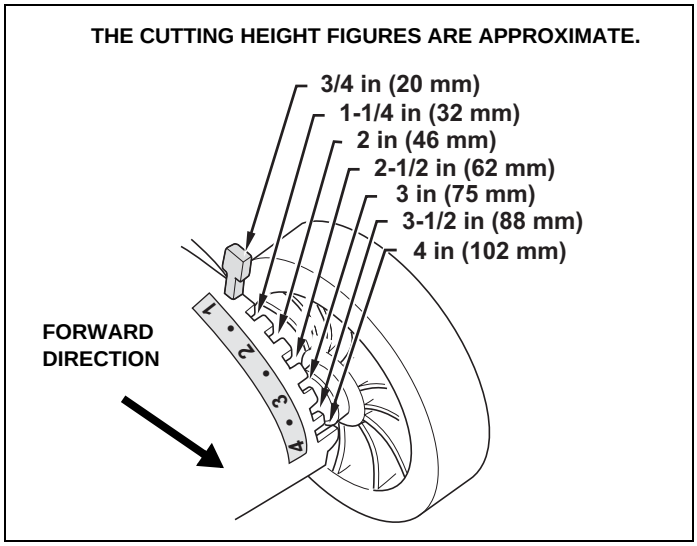

If you are not sure what cutting height to select, start with a high setting and check the appearance of the lawn after mowing a small area. Then readjust the cutting height if necessary.

Check the Oil Level

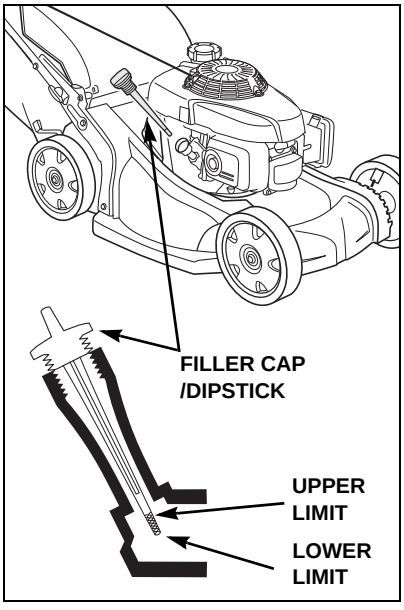

1. Unscrew and remove the filler cap/dipstick and wipe it clean.
2. Insert and remove the dipstick **without screwing it into the filler neck**. Check the oil level shown on the dipstick.
3. If the oil level is low, add oil to reach the upper limit mark on the dipstick.

   Do not overfill. If the engine is overfilled, the excess oil may get transferred to the air cleaner housing and air filter. An indication of overfilling is white or blue smoke coming from the muffler when the engine is running.

   Use 10W-30 API Service category SJ oil for normal conditions. For additional oil recommendations, see page 12.

   NOTICE

   Running the engine with a low oil level can cause engine damage.
4. Screw in the filler cap/dipstick securely.

Add Fuel

This engine is certified to operate on regular gasoline with a pump octane rating of 86 or higher.

Never use stale or contaminated gasoline or an oil/gasoline mixture. Avoid getting dirt or water in the fuel tank.

You may use regular unleaded gasoline containing no more than 10% ethanol (E10) or 5% methanol by volume. In addition, methanol must contain cosolvents and corrosion inhibitors.

Use of fuels with content of ethanol or methanol greater than shown above may cause starting and/or performance problems. It may also damage metal, rubber, and plastic parts of the fuel system.

Engine damage or performance problems that result from using a fuel with percentages of ethanol or methanol greater than shown above are not covered under warranty.

⚠ WARNING

Gasoline is highly flammable and explosive, and you can be burned or seriously injured when refueling.

- Stop the engine and let it cool before refueling
- Keep heat, sparks, and flame away
- Refuel only outdoors
- Wipe up spills immediately

If your equipment will be used on an infrequent or intermittent basis, (more than 4 weeks before next use), refer to “AVOIDING FUEL-RELATED PROBLEMS” on page 19 for information regarding fuel deterioration.

1. Remove the fuel tank cap.
2. Add fuel to the bottom of the red fuel level gauge in the neck of the fuel tank. Do not overfill. Wipe up spilled fuel before starting the engine.

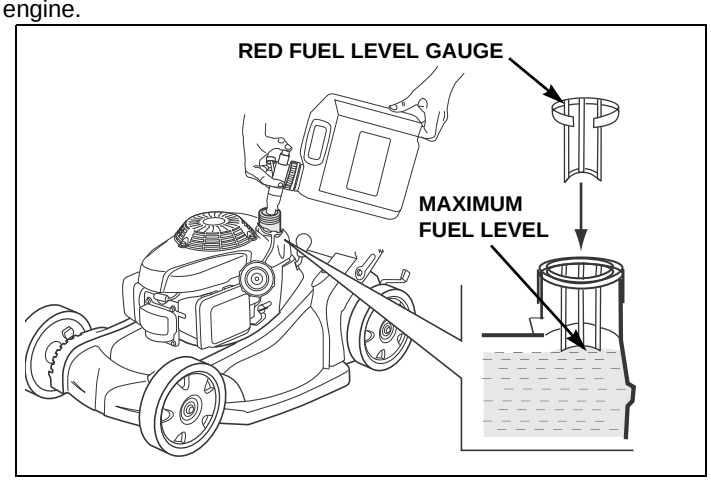

3. Tighten the fuel tank cap until it clicks.

   Move the mower at least 10 feet (3 meters) away from the fueling source and site before starting the engine.

NOTICE

Fuel can damage paint and plastic. Be careful not to spill fuel when filling your fuel tank. Damage caused by spilled fuel is not covered by the DISTRIBUTOR’S LIMITED WARRANTY (page 21*).*

OPERATION

For your safety, avoid starting or operating the engine in an enclosed area, such as a garage. Your mower’s exhaust contains poisonous carbon monoxide gas, which can collect rapidly in an enclosed area and cause illness or death.

⚠ WARNING

Exhaust contains poisonous carbon monoxide gas that can build up to dangerous levels in closed areas.
Breathing carbon monoxide can cause unconsciousness or death.
Never run the lawn mower in a closed, or even partially closed area where people may be present.

You may hear a clicking noise as you push the lawn mower forward with the engine OFF. This is normal and will not damage the mower.

Safe Mowing Practices

Most injuries and property damage with walk-behind mowers can be prevented if you follow all instructions in this manual and on the mower. The most common hazards are discussed below, along with the best way to protect yourself and others.

Avoid Rotating Blades

Rotating blades can cause serious cuts and even amputate fingers, hands, toes, or feet. Keep away from the mower deck whenever the engine is running. If you need to adjust the cutting height or work around the deck for any other reason, always shut off the engine. Wear heavy gloves and disconnect the spark plug cap when you need to clean the mower deck or handle the blades.

⚠ DANGER

The blades are sharp and spin at high speed. If you come in contact with a spinning blade, it will cut you severely and can amputate fingers and toes.

- Wear protective footwear
- Keep you hands and feet away from the mower deck while the engine is running
- Stop the engine before performing any adjustment, inspection, or maintenance

Clear Mowing Area

Mower blades can throw rocks and other objects with enough force to cause serious injury. Before mowing, carefully inspect the area and remove all sticks, stones, pieces of wire, and other loose objects. Never operate the blades over gravel.

NOTICE

Striking objects with the spinning blades can cause severe engine damage, which is not covered by the DISTRIBUTORS LIMITED WARRANTY (page 21).

Keep Shields in Place

Guards and shields are designed to protect you from being hit by thrown objects and from hot engine parts and moving components. For your safety and the safety of others, keep all shields in place when the engine is running.

Refuel With Care

Gasoline is extremely flammable and gasoline vapor can explode. Refuel only outdoors, in a well-ventilated area, with the engine OFF. Never smoke near gasoline, and keep other flames and sparks away. Always store gasoline in an approved container.

Wear Protective Clothing

Wearing protective clothing will reduce your risk of injury. Long pants and eye protection reduce the risk of injuries from thrown objects. Sturdy shoes with aggressive soles will help protect your feet and give you better traction on slopes or uneven ground.

Stop the Blades When Not Mowing

If you need to leave the mower for any reason, even just to inspect the lawn ahead, stop the blades by releasing the blade control lever.

Avoid Slopes

Avoid steep slopes of more than 20°.

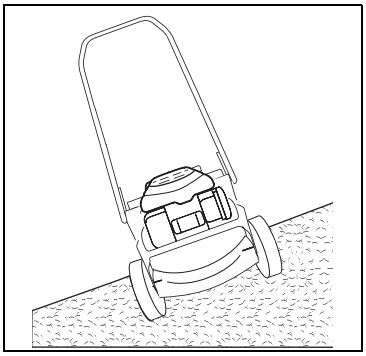

Mow across slopes, not up and down. Be careful when changing direction. Mowing on a slope when the grass is damp or wet could cause you to slip, fall, and lose control of the mower.

NOTICE

Mowing on steep slopes can starve the engine of oil, causing engine damage that is not covered by the DISTRIBUTORS LIMITED WARRANTY (page 21).

Keep all four wheels on the ground, and be careful to avoid losing your footing and your control of the mower. Keep a firm grip on the handlebar, and walk, never run, with the mower. Be very careful when mowing uneven or rough ground.

If stuck, do not kick or shove the mower with your foot. Use the handlebar to control the mower.

Avoid Obstacles

Gravel, loose stones, and landscaping material can be picked up by the mower and thrown many feet with enough force to cause serious personal injury and/or property damage. The best way to prevent potential injury from thrown objects is to release the blade control lever to stop the blades before reaching areas with gravel, loose stones, or landscaping material.

Be careful when mowing over obstacles that stick up above the surface of the lawn such as sprinkler heads, paving, edging, raised tree roots, etc.

If the blade hits something, or if the mower starts to vibrate, stop the engine immediately, disconnect the spark plug cap, and check for damage (page 11). Striking objects may damage the blades, bend the crankshaft, and/or break the mower deck or other components. Vibration usually indicates serious trouble.

⚠ WARNING

A worn, cracked, or damaged blade can break, and pieces of the damaged blade can become dangerous projectiles.

Blades thrown from the mower could seriously hurt or kill someone.

Inspect the blades regularly (see page 11), and do not operate the mower with a worn or damaged blade.

The *DISTRIBUTOR'S LIMITED WARRANTY* (page 21) does not cover parts damaged by accidental impact collision.

Operating the Controls

Throttle Lever

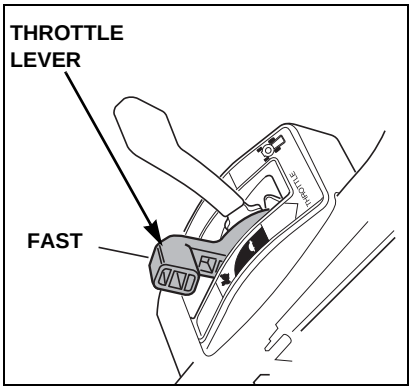

For best cut quality, always mow with the throttle lever in the FAST position. When the blades rotate at the preset fast speed, they create a strong fan action that lifts and cuts grass more efficiently.

Do not try to increase the preset engine speed; the blades could fracture and come apart.

Blade Control Lever

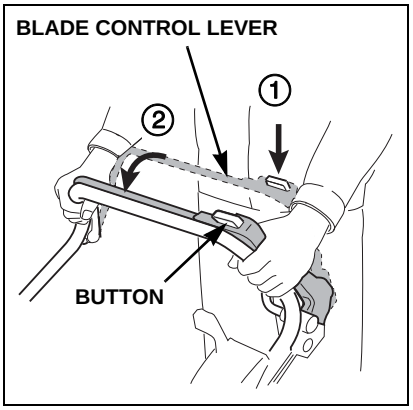

To start blade rotation, hold down the yellow button ① on top of the blade control lever, and then push the lever ② forward quickly and hold it against the handlebar. Move your hand away from the yellow button and continue to hold the blade control lever against the handlebar.

Operate the blade control lever with a quick and complete motion so that the blade control is always either fully engaged or released. This will help to prevent stalling the engine, and it will also extend the service life of the blade control mechanism.

To stop blade rotation, release the blade control lever. The engine will continue to run. Always release the blade control lever before starting the engine to prevent the blades from turning.

Drive Clutch Lever

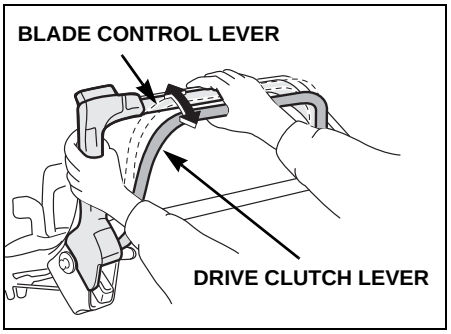

Push the drive clutch lever forward to propel the mower.

Release the drive clutch lever to stop the mower's forward movement.

You can control the self-propelled speed with the drive clutch lever. The mower will move gradually faster as you push the drive clutch lever forward. If you push the lever all the way forward to the handlebar, the mower will move at the speed determined by the shift lever setting.

When moving and using the drive clutch lever to change the self-propelled speed, continue to fully hold the blade control lever against the handlebar. This will help prevent damage to the blade control mechanism. Use the shift lever (see page 9) to change the maximum speed so you can hold the drive clutch lever comfortably against the handlebar.

For self-propelled mowing, press the button on top of the blade control lever, push the blade control lever completely forward, and then push the drive clutch lever forward. The drive clutch lever will hold the blade control lever against the handlebar.

Always release the drive clutch lever before starting the engine. If the drive clutch is engaged, the mower will move forward when you operate the starter.

Shift Lever

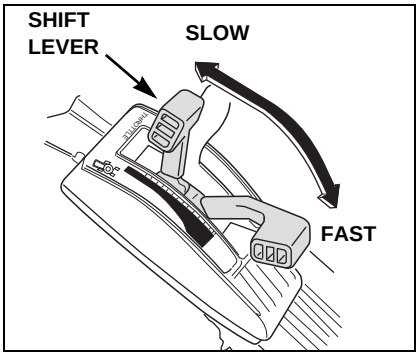

Use the shift lever to select the forward speed at which you wish to mow.

Do not use the throttle lever to adjust your forward speed. The throttle lever must remain in the FAST position for good mowing performance.

The position of the shift lever determines the maximum ground speed when the drive clutch lever is fully engaged.

For maximum mowing performance, use the lower speed range for mowing and the higher speed range for transporting.

With the shift lever all the way back and the drive clutch lever engaged, the mower will move slowly or not at all.

Starting the Engine

Before starting, the engine, always release the drive control lever so that the mower will not move forward when you operate the starter.

1. Turn the fuel valve to the ON position (page 3).
2. Move the throttle lever to the FAST position.

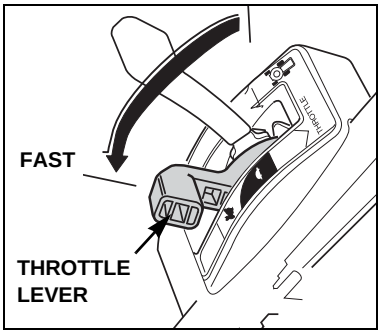

3. Start the engine using the electric starter or the recoil (manual) starter.

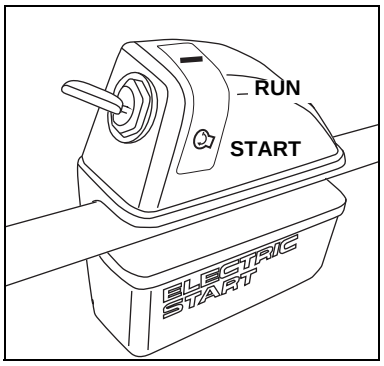

Electric start:
Turn the starter key switch to the START position. Let the key return to the RUN position when the engine starts.

The starter should not be cranked for more than 5 seconds at a time. If the engine fails to start, release the switch and wait 10 seconds before operating the starter again.

If the battery does not have sufficient charge to start the engine, possibly due to a long storage period, use the recoil starter to start the engine for at least one mowing session. The battery should have sufficient charge after one mowing session (approximately 1 hr). An optional plug-in charger is also available (page 20).

Manual start:
Turn the engine switch to the RUN position. The engine switch must be in the RUN position to start the engine with the recoil starter.

Pull the starter grip lightly until you feel resistance, and then pull briskly. Return the starter grip gently.

To ensure easy restarting and maximum performance from the Auto Choke System, allow the engine to run for at least three minutes after starting a cold engine before shutting down. This minimum run time will be longer if the temperature is below 70 °F (21 °C).

Stopping the Engine

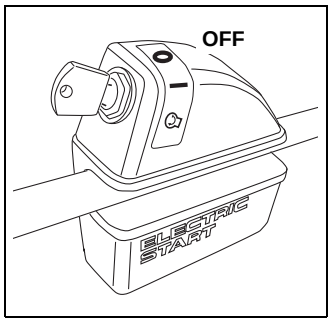

1. Release the drive clutch and blade control levers.
2. Move the throttle lever to the slowest position.
3. Turn the key switch to the OFF position.
4. If your mower will not be used for 3 to 4 weeks, we recommend running the engine's carburetor out of fuel. You can do this by leaving the fuel valve OFF, restarting the engine and running it until it stops. See "AVOIDING FUEL-RELATED PROBLEMS" on page 19 if you don't plan to use your mower for a month or more.
5. Clean your mower after each mowing; refer to "Cleaning" on page 15.

SERVICING YOUR MOWER

Proper maintenance is essential for safe, economical, and trouble-free operation. It also helps reduce air pollution.

⚠ WARNING

Improper maintenance, or failure to correct a problem before operation, can cause a serious malfunction.

Some malfunctions can seriously hurt or kill you.

Always follow the inspection and maintenance recommendations and schedules in this owner's manual.

To help you properly care for your mower, the following pages include a maintenance schedule, routine inspection procedures, and simple maintenance procedures using basic hand tools. Other service tasks that are more difficult or require special tools are best handled by professionals and are normally performed by a Honda technician or other qualified mechanic.

The maintenance schedule applies to normal operating conditions. If you operate your mower under severe conditions, such as sustained high load, high temperature, or unusually wet or dusty conditions, consult your servicing dealer for recommendations applicable to your individual needs and use.

Remember that an authorized Honda servicing dealer knows your mower best and is fully equipped to maintain and repair it. To ensure the best quality and reliability, use only new, Honda Genuine parts or their equivalents for repair and replacement.

Maintenance, replacement, or repair of the emission control devices and systems may be performed by any engine repair establishment or individual, using parts that are "certified" to EPA standards.

Maintenance Safety

Some of the most important safety precautions follow. However, we cannot warn you of every conceivable hazard that can arise in performing maintenance. Only you can decide whether or not you should perform a given task.

⚠ WARNING

Improper maintenance can cause an unsafe condition.

Failure to properly follow maintenance instructions and precautions can cause you to be seriously hurt or killed.

Always follow the procedures and precautions in this manual.

Safety Precautions

- Make sure the engine is off before you begin any maintenance or repairs. This will eliminate several potential hazards:
  - **Carbon monoxide poisoning from engine exhaust.** Be sure there is adequate ventilation whenever you operate the engine.
  - **Burns from hot parts.** Let the engine and exhaust system cool before touching.
  - **Injury from moving parts.** Do not run the engine unless instructed to do so.
- Read the instructions before you begin, and make sure you have the tools and skills required.
- To reduce the possibility of fire or explosion, be careful when working around gasoline. Use only a nonflammable solvent, not gasoline, to clean parts. Keep cigarettes, sparks, and flames away from all fuel-related parts.

Maintenance Schedule

Item	Action	Before each use	5 hours of use or first month	First 25 hours of use	50 hours of use or every 6 months	100 hours of use or every year	150 hours of use or every two years	See page
Rear shield	Check	O						5
Blades	Inspect	O						11
Blade mounting bolts	Inspect	O						
Engine oil	Check	O						6
	Change		O		O (2)	O	O	12
Air filter	Check	O						
	Clean			O (1)	O (1)	O (1)		
	Replace						O	
Grass bag	Check	O						6
Blade control operation	Check	O				O		8
Spark plug	Check					O		13
	Replace						O	
Spark arrester (optional part)	Clean					O		
Blade control cable	Adjust			O (3)(4)		O (4)		—
Drive clutch cable	Adjust			O (4)		O (4)		—
Throttle cable	Adjust					O (4)		—
Idle speed	Adjust					O (4)		—
Fuel tank/filter	Clean					O (3)		—
Valve clearance	Check-adjust					O (3)		—
Pinion gears	Grease					O (3)		—
Rear wheel adjuster bushings	Inspect-grease						O (3)	—
Fuel lines	Check	Check every 2 years and replace if necessary (3)						—

(1) Service more frequently when used in dusty areas.

(2) Change engine oil every 25 hours when used under heavy load or in high outside air temperatures.

(3) These items should be serviced by an authorized Honda servicing dealer unless you have the proper tools and are mechanically proficient. Refer to the Honda shop manual for service procedures. See “Honda Publications” on page 20 for ordering information.

(4) See FAQ section at PowerEquipment.Honda.com for information.

Failure to follow this Maintenance Schedule could result in non-warrantable failures.

Blade Inspection

1. Turn the fuel valve OFF (page 3).
2. Disconnect the spark plug cap from the spark plug (page 13).
3. Tilt the mower to the right side so that the fuel cap side is up. This will help to prevent fuel leakage and hard starting due to carburetor flooding.
4. Inspect the blades for damage, cracks, and excessive rust or corrosion.

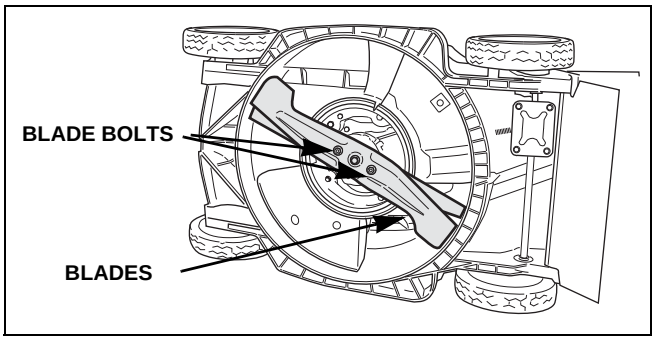

⚠ WARNING

A worn, cracked, or damaged blade can break, and pieces of the damaged blade can become dangerous projectiles.

Blades thrown from the mower could seriously hurt or kill someone.

Inspect the blades regularly, and do not operate the mower with worn or damaged blades.

A dull blade can be sharpened, but a blade that is excessively worn, bent, cracked, heavily rusted, or otherwise damaged must be replaced.

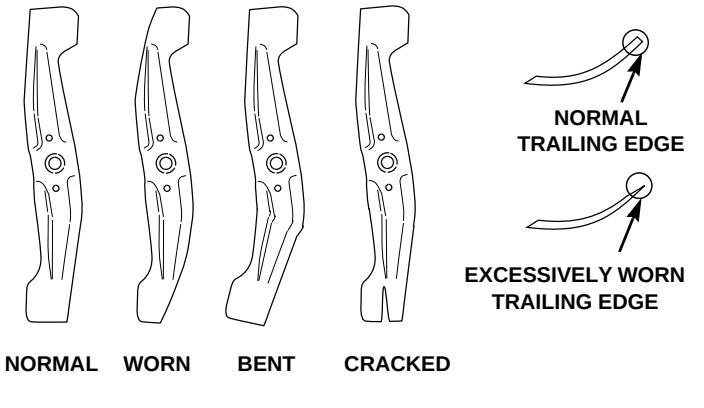

If a blade is bent, take the lawn mower to an authorized Honda servicing dealer for inspection.

Blade Mounting Bolt Inspection

Inspect the blade bolts for any signs of damage or looseness. If they are damaged, they must be replaced.

If they appear loose, a torque wrench must be used to accurately tighten the blade bolts to the required torque. If you do not have a torque wrench, take your lawn mower to an authorized dealer to have the bolts replaced or tightened.

Use only Honda Genuine blade bolts and special washers, since they are specifically designed for this purpose. Replacement part numbers are on page 20.

INSPECT WASHERS AND BOLT HEADS FOR LOOSENESS AND DAMAGE.

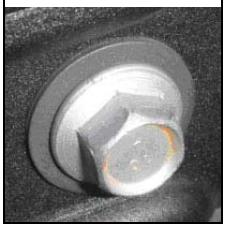

Blade Replacement

1. Turn the fuel valve OFF (page 3).
2. Disconnect the spark plug cap from the spark plug (page 13).
3. Tilt the mower to the right side so that the fuel cap side is up. This will help to prevent fuel leakage and hard starting due to carburetor flooding.
4. Remove the two blade bolts with a 14 mm (6 point) socket wrench. Use a wooden block to prevent the blades from turning when removing the bolts. Remove the blades.

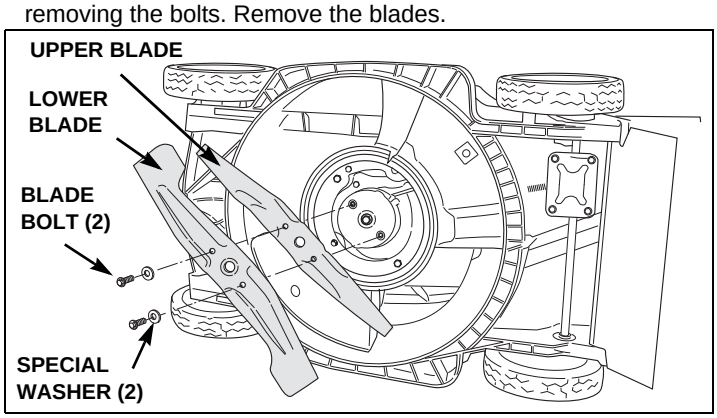

5. Clean dirt and grass from around the blade mounting area.
6. Install the sharpened or replacement blades using the two blade bolts and special washers as shown below. Be sure to install the washers in the direction shown.

   Always install both blades as a set.

   The blade bolts and washers are specially designed for this application. When replacing bolts and washers, use only Honda Genuine replacement parts.

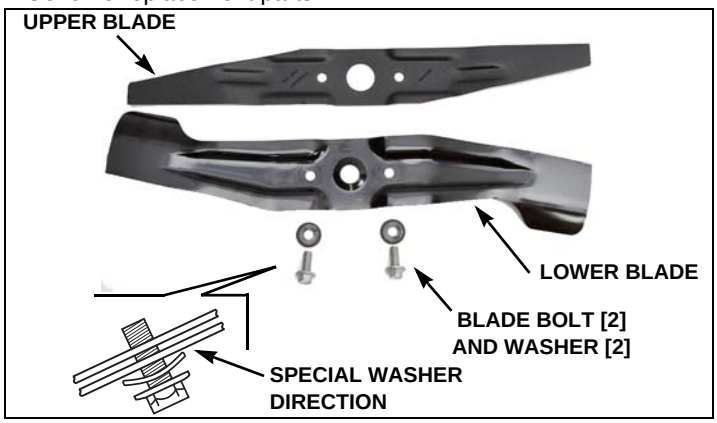

7. Tighten the blade bolts with a torque wrench to the specified torque. Use a wooden block to prevent the blades from turning when tightening the bolts, as shown on page 12.

   Blade bolt torque: 36 ~ 43 ft-lb (49 ~ 59 N·m)

   If you do not have a torque wrench, have an authorized Honda servicing dealer tighten the blade bolts.

⚠ WARNING

If the blade bolts are not torqued properly, the blade could loosen and be thrown from the mower.

Blades thrown from the mower could seriously hurt or kill someone.

Ensure the blade bolts are torqued properly.

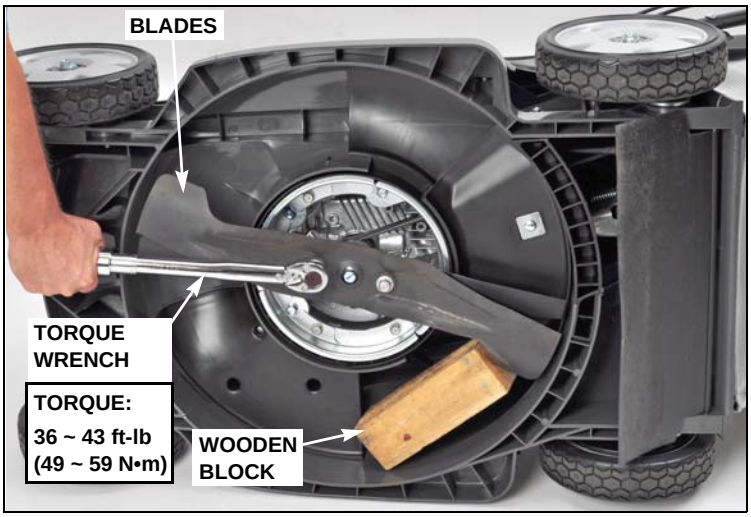

Oil Change

Change the oil after the first month or 5 hours of use. Thereafter, change the oil every 6 months or 50 hours of use. Change the oil more frequently when used under heavy load or high outdoor temperatures. See “Engine Oil Recommendations” on this page for recommended oil properties.

Drain the used oil while the engine is warm. Warm oil drains quickly and completely.

To reduce the chance of scratching the side of the mower deck or wheels when tipping, place a piece of cardboard or drop cloth on the ground.

1. Turn the fuel valve OFF (page 3). This will reduce the possibility of fuel leakage.
2. Wipe the oil filler area clean, and then remove the oil filler cap/dipstick.
3. Place a suitable container next to the mower to catch the used oil, and then tilt the mower on its right side.

   The used oil will drain through the filler neck. Allow the oil to drain completely.

   After draining, take the oil to your local recycling center or service station. Do not throw it in the trash, pour it on the ground, or pour it down a drain.



4. Fill with the recommended oil. Do not overfill. Allow a couple of minutes for the oil to settle in the engine, and then measure the oil level (page 6).

   Refill amount:
   12.0 ~ 13.5 oz
   (0.35 ~ 0.40 L)



NOTICE

Using non-detergent oil can shorten the engine’s service life, and using 2-stroke oil can damage the engine.

Engine Oil Recommendations

Oil is a major factor affecting performance and service life. Always change the oil in accordance with the *Maintenance Schedule* (page 10).

Recommended oil for general use: SAE 10W-30

Other viscosities shown in the chart may be used when the average temperature in your area is within the recommended range.

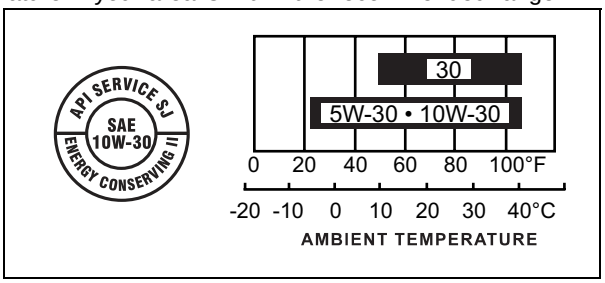

The SAE oil viscosity and service category are in the API label on the oil container. Honda recommends API service category SJ or later oil.

Air Filter

Clean the air filter after the first 25 hours of use. Thereafter, clean the filter every 6 months or 50 hours of use. Clean the filter more often when used in dusty areas. Replace the filter every 2 years or 150 hours of use.

A properly maintained air filter will help prevent dirt from entering your engine. Dirt entering the carburetor can be drawn into small passages in the carburetor and cause premature engine wear. These small passages can become blocked, causing starting or running problems.

NOTICE

Operating the engine without an air filter, with a damaged air filter, or with an improperly installed air filter cover will allow dirt to enter the engine, causing rapid engine wear. This type of damage is not covered by the DISTRIBUTOR’S LIMITED WARRANTY (page 21).

We recommend the use of a Honda Genuine air filter to ensure it seals and performs as designed. Using a non-Honda air filter can result in dirt bypassing the filter, causing damage to the engine or fuel system.

1. Press down on the cover tabs and remove the cover.
2. Remove the filter from the air cleaner housing.

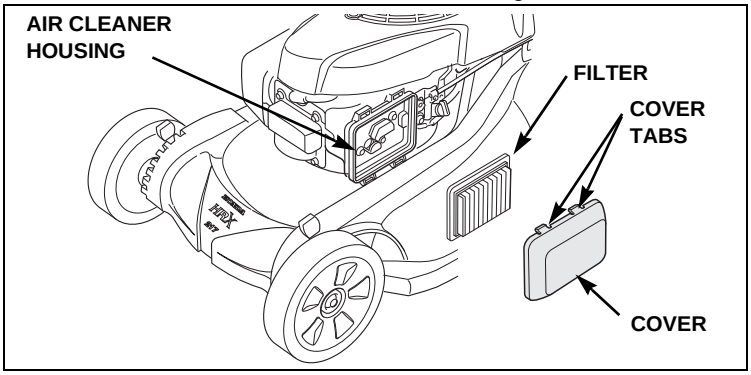

3. Inspect the filter; replace if damaged.
4. Clean the filter by tapping it several times on a hard surface to remove dirt, or blow compressed air (not exceeding 30 psi [207 kPa]) through the air filter from the inside. Never try to brush off dirt; brushing will force dirt into the fibers.
5. Wipe dirt from the inside of the air cleaner housing and cover using a moist rag. Be careful to prevent dirt from entering the air duct that leads to the carburetor.
6. Reinstall the filter and cover. Be sure both tabs are fully locked in place.

Spark Plug

Replace the spark plug every 2 years or after 150 hours of use.

Required Spark Plug: NGK - BPR5ES

NOTICE

An incorrect spark plug can cause engine damage.

For good performance, the spark plug must be properly gapped and free of deposits.

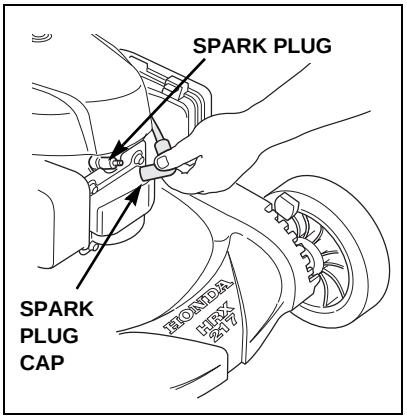

1. Allow the engine to cool, disconnect the spark plug cap, and remove any dirt from around the spark plug area.
2. Remove the spark plug with a 13/16 in (21 mm) spark plug wrench.
3. Inspect the spark plug. Replace it if the electrodes are worn, or if the insulator is cracked or chipped.
4. Measure the spark plug electrode gap with a suitable gauge.

   Gap: 0.028 ~ 0.031 in (0.7 ~ 0.8 mm)

   Correct the gap, if necessary, by carefully bending the side electrode.

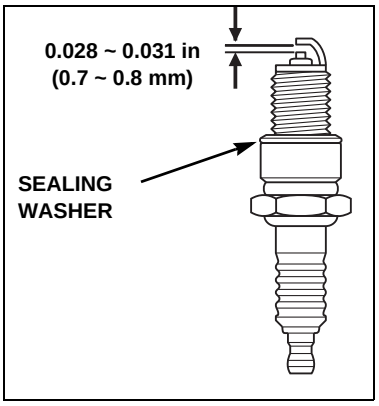

5. Install the spark plug carefully, by hand, to avoid cross-threading.
6. After the spark plug seats, tighten with a 13/16 in (21 mm) spark plug wrench to compress the washer.

   If reinstalling the old spark plug, tighten 1/8 to 1/4 turn after the spark plug seats.

   If installing a new spark plug, tighten 1/2 turn after the spark plug seats.

   Spark plug torque: 14 ft-lb (20 N·m)

   NOTICE

   A loose spark plug can overheat and damage the engine. Overtightening the spark plug can damage the threads in the cylinder head.

7. Install the spark plug cap on the spark plug.

Spark Arrester (optional part)

The spark arrester must be serviced every 100 hours to keep it functioning as designed.

Your lawn mower engine is not factory-equipped with a spark arrester. In some areas, it is illegal to operate an engine without a spark arrester. Check local laws and regulations. An optional USDA approved spark arrester is available from an authorized Honda servicing dealer. See page 20 for part numbers.

1. Allow the engine to cool and disconnect the spark plug cap.
2. Remove the three flange bolts and the heat shield. Remove the setscrew and the spark arrester from the muffler.
3. Check for carbon deposits on the spark arrester and the exhaust port. Use a brush to remove any carbon deposits from the screen. Replace the screen if it is torn or damaged.
4. Installation is the reverse of removal. Tighten all hardware securely.

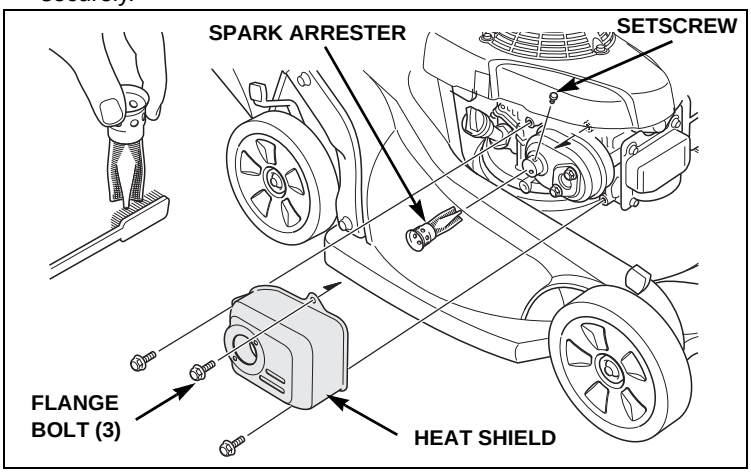

Charging the Battery

The lawn mower engine has an internal charging system. Under normal mowing usage it is not necessary to charge or maintain the battery.

If the mower fails to start or has been stored for an extended period:

- Start the lawn mower using the recoil starter manually for at least one mowing session. This should charge the battery sufficiently to use the electric starter
- If the electric starter does not operate (after manually starting for one mowing session), check the 3 Amp and 30 Amp fuses (shown to the right)
- If the electric starter still does not operate, take the lawn mower to an authorized Honda servicing dealer
- If you prefer, there is an optional AC powered plug-in battery charger shown below

Optional Battery Charger

The optional battery charger is available through your Honda servicing dealer, see page 20 for ordering information.

Charge the battery as follows:

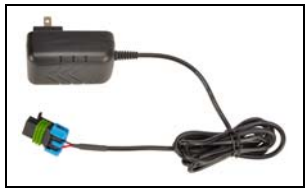

NOTICE

Only use a genuine Honda 12 volt charger or equivalent with a maximum rated output less than 1 A.
Do not charge using a standard automotive charger.

1. Disconnect the charge port connector on the handle near the battery box.
2. Insert the connector on the Honda battery charger into the charge port connector that is closest to the battery.
3. Plug the charger into a standard 120 volt AC power outlet and let the battery charge.

   The charger may become slightly warm during charging, this is normal.

   The float charger can be left connected continuously when the lawn mower is not in use.

Light color	Description
Red light	Charging battery
Green light	Charger is tending battery at 13.6V
No light	Charger unplugged or malfunctioning

4. After charging the battery, disconnect the charger and then firmly reconnect the charge port connectors on the handle together.

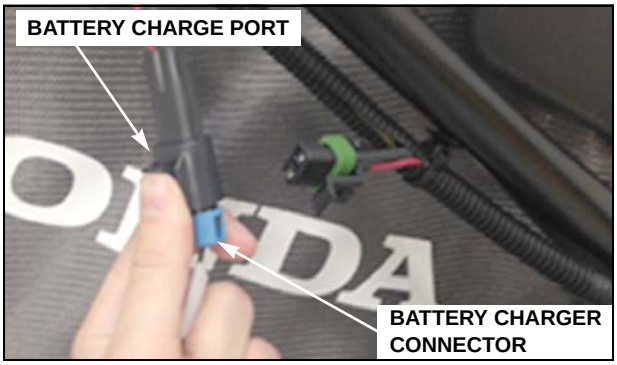

NOTICE

The battery will not charge properly and could be damaged when the handle is folded and the battery is upside side down.

Replacing the Battery

1. Remove the battery cover by removing the three battery cover mounting screws.
2. Carefully remove the battery from the box, and then pull the connector away from the terminals.
3. Carefully position the battery in the case without pinching the wires. The wires must be routed above the top side of the battery exactly as shown.

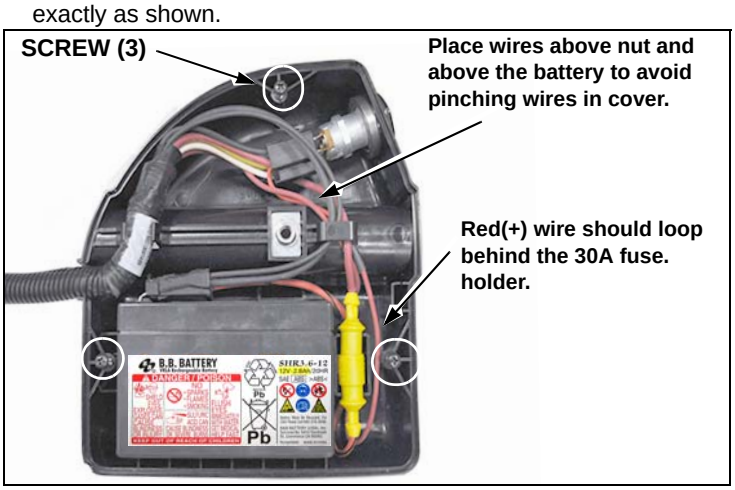

Replacing a Fuse

The electric starter circuit and battery are protected by a 30 Ampere and 3 Ampere fuse. If the 30 Amp fuse burns out, the electric starter will not operate and if the 3 Amp fuse burns out, the battery will not charge. The engine can be started manually if either fuse burns out.

1. Remove the battery cover by removing the three cover mounting screws.
2. The 30 Amp fuse is for main line protection. The 3 Amp fuse is for the charge line protection.
3. Remove and inspect the fuses. If they are burned out, replace with a serviceable fuse.

If a frequent fuse failure occurs, it usually indicates a short circuit or an overload in the electrical system. Take the mower to an authorized Honda servicing dealer for repair.

TRANSPORTING

If the engine has been running, allow it to cool before loading the mower on the transport vehicle. A hot engine and exhaust system can burn you and can ignite some materials.

Turn the fuel valve to the OFF position. This will prevent carburetor flooding and reduce the possibility of fuel leakage.

If installed, remove the grass bag.

If a suitable loading ramp is not available, two people should lift the mower on and off the transport vehicle while holding the mower level.

Position the mower so all four wheels are on the bed of the transport vehicle. Tie the mower down with rope or straps, and block the wheels. Keep the tie-down rope or straps away from the controls, adjustment levers, cables, and the carburetor.

Fold the handlebar so the mower will take up less space (page 15).

STORAGE

Proper storage preparation is essential for keeping your lawn mower trouble free and looking good. To help keep rust and corrosion from impairing your lawn mower's function and appearance, and to make the engine easier to start after storage, follow the instructions described in this section to:

- Drain or treat the fuel
- Change the oil and coat the engine cylinder
- Clean the mower, engine, and grass bag
- Choose a storage location

Fuel

See "AVOIDING FUEL-RELATED PROBLEMS" on page 19 for a list of recommended procedures to avoid fuel related problems.

The *DISTRIBUTOR'S LIMITED WARRANTY* (page 21) does not cover fuel system damage or engine performance problems resulting from neglected storage preparation.

Cleaning

Mower Deck

Allow the engine to cool before washing.

Before washing the underside of the mower deck, stop the engine and turn the fuel valve to the OFF position. Rest the mower on its right side, so the fuel cap side is up. This will help to prevent fuel leakage and hard starting due to carburetor flooding. Wear heavy gloves to protect your hands from the blades.

Be careful to avoid getting water into controls and cables.

Engine

Allow the engine to cool, and then wash the engine by hand. Be careful to prevent water from entering the air cleaner and exhaust opening.

NOTICE

Using a garden hose or pressure washing equipment can force water into the air filter. Water in the air cleaner will soak the paper element and can enter the carburetor or engine cylinder, causing damage.
Water contacting a hot engine can cause damage. If the engine has been running, allow it to cool before washing.

Grass Bag

Remove the bag from the mower, and wash it with a garden hose or pressure washer. Allow the bag to dry completely before storage.

Drying

After washing the lawn mower, wipe dry all accessible surfaces.

Place the mower with its wheels on a level surface. Start the engine outdoors and let it run until it reaches normal operating temperature to evaporate any water remaining on the engine.

Engage the Roto-Stop several times to expel any residual water from the mechanism.

Stop the engine and allow it to cool.

After the lawn mower is clean and dry, touch up any damaged paint, and coat other areas that may rust with a light film of oil.

Oil

Change the engine oil (see page 12) if planned storage is 3 months or longer or when storing in a high humidity environment.

Add oil in the engine cylinder to prevent rust.

1. Remove the spark plug (page 13).
2. Pour a teaspoon (5 cc) of clean engine oil into the cylinder to keep it from rusting.
3. Pull the starter rope several times to distribute the oil in the cylinder.
4. Reinstall the spark plug.
5. Pull the starter rope slowly until resistance is felt, and then return the starter grip gently. This will close the valves so moisture cannot enter the engine cylinder.

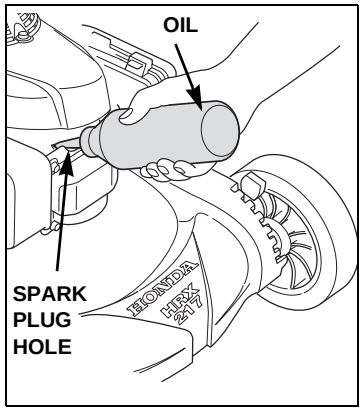

Storage Location

If your mower will be stored with gasoline in the fuel tank and carburetor, it is important to reduce the hazard of gasoline vapor ignition. Select a well-ventilated dry storage area away from any appliance that operates with a flame, such as a furnace, water heater, or clothes dryer. Also avoid any area with a spark-producing electric motor, or where power tools are operated.

Make sure the fuel valve is in the OFF position to reduce the possibility of fuel leakage.

Place the mower with its wheels on a level surface. Tilting can cause fuel or oil leakage.

With the engine and exhaust system cool, cover the mower to keep out dust. A hot engine and exhaust system can ignite or melt some materials. Do not use sheet plastic as a dust cover. A nonporous cover will trap moisture around the mower, promoting rust and corrosion.

Handlebar

Remove the grass bag if installed. You can place it on top of the engine with the bag opening to the front.

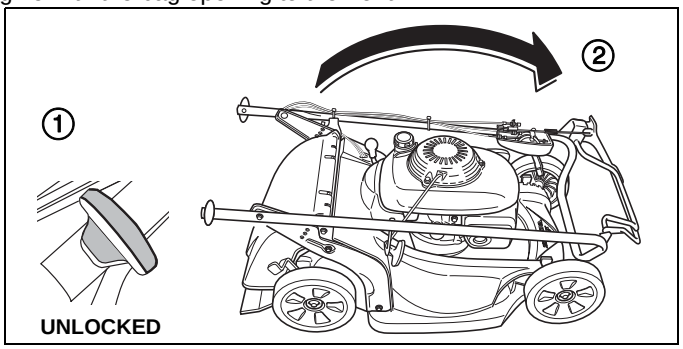

1. Turn the handlebar adjust knobs 90 degrees to unlock the locating pins ①.
2. Fold the handlebar forward ②; do not pinch or kink the cable.

Removing From Storage

When unfolding the handlebar, be sure to lock the handlebar adjust knobs to secure the handlebar in the mowing position.

Check your mower as described in "BEFORE EACH OPERATION" on page 4.

If the cylinder was coated with oil during storage preparation, the engine may smoke briefly at startup.

TROUBLESHOOTING

Engine Will Not Start

Possible Cause	Correction
Throttle lever in wrong position	Move the throttle lever to the FAST position (page 8).
Starter turns slowly or not at all	• Use the recoil starter for at least one mowing session to allow the battery to charge (page 9) • Check for blown fuse (page 14)
Fuel valve OFF	Turn the fuel valve ON (page 3).
Out of fuel	Refuel (page 7).
Bad fuel; mower stored without treating gasoline, or refueled with bad gasoline	Refuel with fresh gasoline (page 7).
Spark plug faulty, fouled, or improperly gapped	Gap or replace the spark plug (page 13).
Spark plug wet with fuel (flooded engine)	Dry and reinstall the spark plug.
Fuel filter clogged, carburetor malfunction, ignition malfunction, valves stuck, etc.	Take the mower to an authorized Honda servicing dealer for repair.

Loss of Power

Possible Cause	Correction
Throttle not set to FAST	Move the throttle lever to the FAST position (page 8).
Grass is too tall	• Raise the cutting height • Cut a narrower swath • Use a slower ground speed • Cut more frequently
Grass is too wet	Allow the grass to dry
Mower deck is clogged	Clean out the mower deck (page 15).
Air filter is clogged	Clean or replace the air filter (page 12).
Bad fuel; mower stored without treating gasoline, or refueled with bad gasoline	Refuel with fresh gasoline (page 7).
Fuel filter clogged, carburetor malfunction, ignition malfunction, valves stuck, etc.	Take the mower to an authorized Honda servicing dealer for repair.

Vibration

Possible Cause	Correction
Grass and debris lodged under the mower deck	Clean out the mower deck (page 15).
Blades loose	Tighten loose blade bolts (page 11).
Blades bent, damaged, or unbalanced by improper sharpening	Take the mower to an authorized Honda servicing dealer for repair.
Mechanical damage, such as a bent crankshaft	

Mowing and Bagging Problems

Possible Cause	Correction
Mower is moving too fast for lawn conditions	Move the shift lever toward the SLOW position (page 9).
Cutting height adjustment levers set at different positions	Set all levers at the same cutting height position (page 6).
Grass bag clogged	Wash the grass bag (page 15).
Mower deck is clogged	Clean out the mower deck (page 15).
Grass is too tall	• Raise the cutting height • Cut a narrower swath • Use a slower ground speed • Cut more frequently
Grass is too wet	Allow the grass to dry
Blades dull, worn, or damaged	Sharpen or replace the blades if necessary (page 11).
Wrong blades installed	Install correct blades (page 11).

TECHNICAL INFORMATION

Serial Number Locations

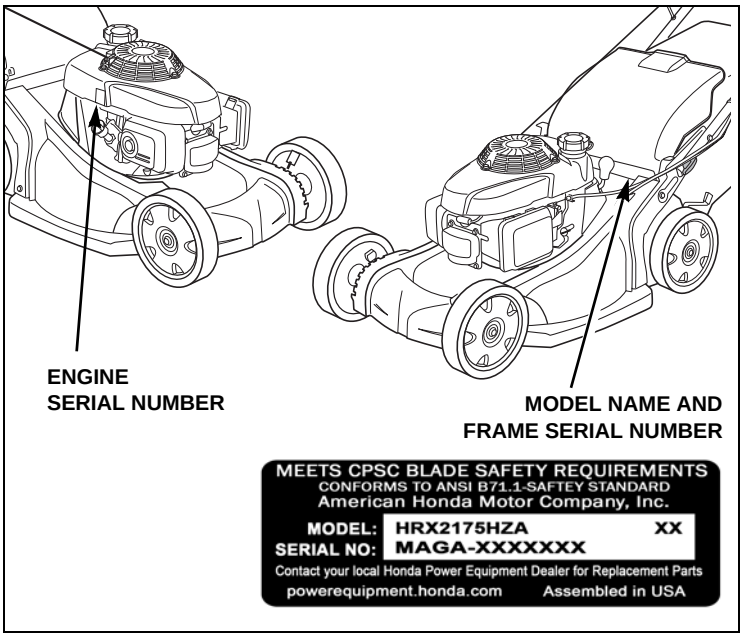

There are two serial numbers, one for the engine and one for the mower frame. Record the engine and frame serial numbers in the space below. You will need these serial numbers when ordering parts and when making technical or warranty inquiries.

Engine serial number: _____

Frame serial number: _____

Date of purchase: _____

High Altitude Operation

At high altitudes, the standard carburetor air-fuel mixture will be too rich. Performance will decrease, and fuel consumption will increase. A very rich mixture will also foul the spark plug and cause hard starting. Operation at an altitude that differs from that at which this engine was certified, for extended periods of time, may increase emissions.

High altitude performance can be improved by specific modifications to the carburetor. If you always operate your lawn mower at altitudes above 5,000 feet (1,500 meters), have your servicing dealer perform this carburetor modification. This engine, when operated at high altitude with the carburetor modifications for high altitude use, will meet each emission standard throughout its useful life.

Even with carburetor modification, engine horsepower will decrease about 3.5% for each 1,000-foot (300-meter) increase in altitude. The effect of altitude on horsepower will be greater than this if no carburetor modification is made.

NOTICE

When the carburetor has been modified for high altitude operation, the air-fuel mixture will be too lean for low altitude use. Operation at altitudes below 5,000 feet (1,500 meters) with a modified carburetor may cause the engine to overheat and result in serious engine damage. For use at low altitudes, have your servicing dealer return the carburetor to original factory specifications.

Emission Control System

Source of Emissions

The combustion process produces carbon monoxide, oxides of nitrogen, and hydrocarbons. Control of hydrocarbons and oxides of nitrogen is very important because, under certain conditions, they react to form photochemical smog when subjected to sunlight. Carbon monoxide does not react in the same way, but it is toxic.

Honda utilizes appropriate air/fuel ratios and other emissions control systems to reduce the emissions of carbon monoxide, oxides of nitrogen, and hydrocarbons. Additionally, Honda fuel systems utilize components and control technologies to reduce evaporative emissions.

U.S. and California Clean Air Acts

U.S. EPA and California regulations require all manufacturers to furnish written instructions describing the operation and maintenance of emissions control systems.

The following instructions and procedures must be followed in order to keep the emissions from your Honda engine within the emissions standards.

Tampering and Altering

NOTICE

Tampering is a violation of federal and California law.

Tampering with or altering the emissions control system may increase emissions beyond the legal limit. Among those acts that constitute tampering are:

- Removal or alteration of any part of the intake, fuel, or exhaust systems
- Altering or defeating the speed-adjusting mechanism to cause the engine to operate outside its design parameters

Problems That May Affect Emissions

If you are aware of any of the following symptoms, have your engine inspected and repaired by your servicing dealer.

- Hard starting or stalling after starting
- Rough idle
- Misfiring, backfiring under load, or afterburning
- Black exhaust smoke or high fuel consumption

Replacement Parts

The emissions control systems on your new Honda engine were designed, built, and certified to conform with EPA and California emissions regulations. We recommend the use of Honda Genuine parts whenever you have maintenance done. These original-design replacement parts are manufactured to the same standards as the original parts, so you can be confident of their performance. The use of replacement parts that are not of the original design and quality may impair the effectiveness of your emissions control system.

A manufacturer of an aftermarket part assumes the responsibility that the part will not adversely affect emissions performance. The manufacturer or rebuilder of the part must certify that use of the part will not result in a failure of the engine to comply with emissions regulations.

Maintenance

Follow the *Maintenance Schedule* on page 10. Remember this schedule is based on the assumption that your machine will be used for its designed purpose. Sustained high-load or high-temperature operation, or use in unusually wet or dusty conditions, will require more frequent service.

Air Index

An Air Index Information hang tag/label is applied to engines certified to an emission durability time period in accordance with the requirements of the California Air Resources Board.

The bar graph is intended to provide you, our customer, the ability to compare the emissions performance of available engines. The lower the Air Index, the less pollution.

The durability description is intended to provide you with information relating the engine's emission durability period. The descriptive term indicates the useful life period for the engine's emission control system. See your *EMISSION SYSTEM WARRANTY* (page 22) for additional information.

Descriptive Term	Applicable to Emissions Durability Period
Moderate	50 hours (0 ~ 80 cc) 125 hours (greater than 80 cc)
Intermediate	125 hours (0 ~ 80 cc) 250 hours (greater than 80 cc)
Extended	300 hours (0 ~ 80 cc) 500 hours (greater than 80 cc) 1000 hours (225 cc and greater)

Specifications

Mower Features

HRX217K5HZAA	Honda rotary mower, 21-inch mower deck, self-charging electric start, Clip Director, hydrostatic transmission, blade brake clutch, Auto Choke System

Dimensions and Weights

Length	71.9 in (1,825 mm)
Width	23 in (585 mm)
Wheelbase	26.7 in (678 mm)
Overall height *	43.9 in (1,115 mm)
Dry weight	102 lb (46.1 kg)
Cutting width	20.9 in (530 mm)
Cutting heights (7)	3/4 ~ 4 in (20 ~ 102 mm)

* 1-1/4 inch cutting height and handle in highest position

Engine Design and Performance

Model	GCV190
Type	4-stroke, overhead-cam, single-cylinder, air-cooled
Displacement	11.4 cu in (186 cc)
Bore and stroke	2.71 x 1.97 in (69.0 x 50.0 mm)
Compression ratio	8.5:1
Ignition system	Transistorized magneto

Transmission Design and Performance

Transmission type	Variable speed
Ground speeds	0 to 3.6 ~ 4.0 mph (0 to 1.60 ~ 1.85 m/s)

Maintenance

Fuel	Unleaded gasoline with a pump octane rating of 86 or higher containing no more than 10% ethanol by volume Capacity: 0.25 US gal (0.93 L) See "AVOIDING FUEL-RELATED PROBLEMS" on page 19	page 7
Blade Bolt Torque	36 ~ 43 ft-lb (49 ~ 59 N•m)	page 11
Engine Oil	SAE 10W-30, API SJ or later Capacity: 17.0 oz (0.50 L) Refill amount: 12.0 ~ 13.5 oz (0.35 ~ 0.40 L)*	page 12
Spark Plug	Type: NGK - BPR5ES Gap: 0.028 ~ 0.031 in (0.7 ~ 0.8 mm)	page 13
Maximum Governed Speed	3,100 +0/-150 rpm **	Shop manual
Valve clearance (cold)	Intake: 0.15 ± 0.04 mm Exhaust: 0.20 ± 0.04 mm	Shop manual

* Actual amount will vary due to residual oil in the engine. Always use the dipstick to confirm the actual level (page 6).

** Do not try to increase the engine speed above the maximum governed speed; the blades could fracture and come apart.

AVOIDING FUEL-RELATED PROBLEMS

When properly maintained, your Honda lawn mower should provide years of trouble-free operation. This includes the fuel system. However, gasoline can quickly deteriorate (in as little as 30 days) causing starting or running problems and, in some cases, damage to the fuel system. Most fuel-related problems can be avoided by following the precautions listed below. Fuel system damage and engine performance problems resulting from deteriorated gasoline are not covered by the *Distributor's Limited Warranty* (see page 21).

Follow These Precautions to Prevent Most Fuel-Related Problems

During the Normal Mowing Season	Reason
Do not use gasoline containing more than 10% ethanol (E10). Not all automotive gasoline is safe to use in your lawn mower.	Higher levels of ethanol in gasoline attract water, and can corrode or damage the fuel system and cause performance problems.
Store gasoline in a clean, plastic, sealed container approved for fuel storage. Store your fuel supply container away from direct sunlight; if the container has a vent, keep it closed.	A plastic container eliminates the risk of rust and metallic contaminants from a metal container entering the fuel system. Gasoline will deteriorate faster when exposed to air and sunlight.
Purchase only enough gasoline to last for 1 to 2 months (about 30 to 60 days). If you purchase enough gasoline to last for more than 60 days, add a fuel stabilizer to your storage container when you fill it.	Gasoline deteriorates with age so try to avoid storing it for long periods, especially in summer heat. Fuel stabilizer will extend the shelf life of gasoline, but it will not reconstitute stale fuel.
Keep your lawn mower's fuel tank full of fresh fuel when not in use. Turn the fuel valve OFF.	If the fuel tank is only partially filled, air in the tank will promote fuel deterioration.
Keep the air filter clean and properly serviced. Check it before each use.	A properly maintained air filter will help prevent dirt from entering the carburetor. The small passages inside the carburetor can become blocked.
3 to 4 Weeks Before Next Use	**Reason**
Keep your lawn mower's fuel tank full of fresh fuel when not in use. Turn the fuel valve OFF.	If the fuel tank is only partially filled, air in the tank will promote fuel deterioration.
Turn the fuel valve to the OFF position, start the engine and let it run approximately 3 minutes until the carburetor is empty and the engine stops.	The small amount of gasoline in your engine's carburetor will deteriorate faster than the fuel in the fuel tank due to its small volume and heat from the engine.
1 to 3 Months Before Next Use	**Reason**
If you did not add fuel stabilizer to your fuel storage container when you filled it up, fill your lawn mower's fuel tank with fresh gasoline.	If the fuel tank is only partially filled, air in the tank will promote fuel deterioration.
Add fuel stabilizer to the lawn mower's fuel tank according to the stabilizer manufacturer's instructions.	Fuel stabilizer will extend the life of gasoline, but it will not reconstitute stale gasoline.
Run the engine outdoors for 10 minutes.	This makes sure treated gasoline has replaced untreated gasoline throughout the fuel system.
Turn the fuel valve to the OFF position, start the engine, and let it run approximately 3 minutes until the carburetor is empty and the engine stops.	The small amount of gasoline in your engine's carburetor will deteriorate faster than the fuel in the fuel tank due to its small volume and heat from the engine.
More Than 3 Months Before Next Use	**Reason**
Start the engine and let it run long enough to empty all the gasoline from the entire fuel system, including the fuel tank. Do not allow gasoline to remain in your lawn mower's fuel tank for more than 3 months (about 90 days) of inactivity.	All fuel stabilizers have a shelf life. It is good practice to empty the fuel system for long term inactivity.

We recommend Pro Honda Fuel Stabilizer, that has improved formulation with added corrosion protection (page 20).

CUSTOMER INFORMATION

Parts, Accessories, and Service Items

Contact an authorized Honda servicing dealer to purchase any of these (or other) Honda Genuine items for your lawn mower.

Replacement Parts

Item	Part Number	Notes
Spark plug	98079-55846	NGK (brand) BPR5ES
Air filter	17211-Z8B-901	Paper
Lower blade	72511-VH7-000	Always use an upper and lower blade as a set.
Upper blade	72531-VH7-000	
Blade bolt	90105-960-710	2 required, 10 x 25 mm
Spring washer	90502-VG3-000	
Grass bag	81320-VH7-D00	Fabric bag only, no frame
Wheel/tire	42710-VH7-010ZA	Rear
	44710-VH7-010ZA	Front
Battery	31500-VH7-800	
Fuse: 30A 3A	38201-VH7-S30 38206-V15-003	
Spare key	35111-VL0-W01	

Accessories

Item	Part Number	Notes
Spark arrester kit	06180-Z0J-000	Includes spark arrester, ID plate, and screw
Mower deck guard kit	06761-VH7-000AH	Two stainless steel side guards
Battery charger	31570-VH7-S31	
Lawn mower cover	08P59-VE2-000AH	Custom fitted, waterproof, and breathable

Service Items

Item	Part Number	Notes
SAE 10W-30 engine oil	08207-10W30	1 quart
NO-SPILL® gas cans	See your local dealer	1-1/4 gallon
	See your local dealer	2-1/2 gallon
Fuel stabilizer	08732-0800	8 ounces For short and long term storage

® NO-SPILL is a registered trademark of NoSpill LLC.

Dealer Locator Information

To find an Authorized Honda Servicing Dealer anywhere in the United States:

Visit powerequipment.honda.com and click on Find a Dealer.

How to Contact Honda

Honda Power Equipment dealership personnel are trained professionals. They should be able to answer any question you may have. If you encounter a problem that your dealer does not solve to your satisfaction, please discuss it with the dealership's management. The Service Manager or General Manager can help. Almost all problems are solved in this way.

If you are dissatisfied with the decision made by the dealership's management, contact the Honda Power Equipment Customer Relations Office. You can write:

American Honda Motor Co., Inc.
Power Equipment Division
Customer Relations Office
4900 Marconi Drive
Alpharetta, GA 30005-8847

Or telephone: (770) 497-6400 M-F, 8:30 a.m. - 7:00 p.m. ET

When you write or call, please give us this information.

- Model and serial numbers (page 17)
- Name of the dealer who sold the lawn mower to you
- Name and address of the dealer who services your lawn mower
- Date of purchase
- Your name, address, and telephone number
- A detailed description of the problem

Honda Publications

These publications will give you information for maintaining and repairing your lawn mower.

Owner's Manual

Keep this owner's manual handy so you can refer to it at any time. Consider this owner's manual a permanent part of the lawn mower; please give it to the new owner if you resell the lawn mower.

The information and specifications included in this publication were in effect at the time of approval for printing. American Honda Motor Co., Inc. reserves the right, however, to discontinue or change specifications or design at any time without notice and without incurring any obligation whatever. No part of this publication may be reproduced without written permission.

Shop Manual

This manual covers complete maintenance and overhaul procedures. It is intended to be used by a skilled technician. Available through your Honda dealer or visit powerequipment.honda.com and click on Product Support; then click on Shop Manuals.

Parts Catalog

This manual provides complete, illustrated parts lists, and is available through your Honda dealer.

Frequently Asked Questions

The Honda Power Equipment web site provides additional information for users of Honda power equipment. Visit powerequipment.honda.com and click on FAQs or scan the QR code shown.

DISTRIBUTOR'S LIMITED WARRANTY

Honda Power Equipment

This warranty is limited to the following Honda Power Equipment products when distributed by American Honda Motor Co., Inc., Power Equipment Division, 4900 Marconi Drive, Alpharetta, Georgia 30005-8847, purchased at retail or placed in rental service on or after January 1, 2010.

PRODUCTS COVERED BY THIS WARRANTY	LENGTH OF WARRANTY[1] (from date of original retail purchase)	
	PRIVATE RESIDENTIAL[2]	COMMERCIAL/RENTAL/ INSTITUTIONAL
HRX Mower and deck[3]	60 months	3 months

(1) Length of warranty: The battery supplied with the lawn mower as standard, original equipment is covered by this warranty for a period of 12 months (private residential) or 3 months (commercial/rental/institutional use) from the date of original retail purchase.

(2) Private residential: Used in maintaining owner's primary and/or secondary residence. Any other use, including but not limited to informal "for hire" use, is considered commercial/rental/institutional use.

(3) Limited lifetime warranty on mower deck is valid for the original purchaser for private residential use only.

To Qualify for This Warranty:

The product must be purchased in the United States, Puerto Rico, or the U.S. Virgin Islands from American Honda or a dealer authorized by American Honda to sell those products. This warranty applies to first retail purchaser and each subsequent owner during the applicable warranty time period, unless noted otherwise.

What American Honda Will Repair or Replace Under Warranty:

American Honda will repair or replace, at its option, any part that is proven to be defective in material or workmanship under normal use during the applicable warranty time period. Warranty repairs and replacements will be made without charge for parts or labor. Anything replaced under warranty becomes the property of American Honda Motor Co., Inc. All parts replaced under warranty will be considered as part of the original product, and any warranty on those parts will expire coincident with the original product warranty.

To Obtain Warranty Service:

You must, at your expense, take the Honda Power Equipment product, accessory, replacement part, apparel, or the power equipment on which the accessory or replacement part is installed, and proof of purchase to any Honda Power Equipment dealer in the United States, Puerto Rico, or the U.S. Virgin Islands who is authorized to sell and/or service that product, during the dealer's normal business hours. To locate a dealer near you, visit our web site at PowerEquipment.Honda.com and click on Find a Dealer.

If you are unable to obtain warranty service or are dissatisfied with the warranty service you receive, contact the owner of the dealership involved; normally this will resolve the problem. However, if you should require further assistance, write or call the Power Equipment Customer Relations Department of American Honda Motor Co., Inc. See "How to Contact Honda" on page 20.

Exclusions:

1. Any damage or deterioration resulting from the following:
   - Neglect of the periodic maintenance as specified in this manual
   - Improper repair or maintenance
   - Operating methods other than those indicated in the product owner's manual
   - Increasing engine speed beyond factory specification
   - The use of non-genuine Honda parts, accessories, lubricants, and fluids other than those approved by Honda
   - Exposure of the product to soot and smoke, chemical agents, bird droppings, sea water, salt or other corrosive environments
   - Collision, fuel contamination or deterioration, neglect, unauthorized alteration, misuse, incorporation or use of unsuitable attachments or parts
   - Normal wear and tear (including, but not limited to, normal fading of painted or plated surfaces, sheet peeling, and other natural deterioration)
2. Consumable parts: Honda does not warrant parts deterioration due to normal wear and tear. The following parts are not covered by warranty (unless they are needed as a part of another warranted repair): spark plug, fuel filter, air cleaner element, clutch disc, tire, wheel bearing, recoil starter rope, cable, belt, cutter blade, oil, and grease.
3. Cleaning, adjustment, and normal periodic maintenance work (carburetor cleaning, engine oil draining, blade sharpening, belt and cable adjustments).
4. Any product that has ever been declared a total loss or sold for salvage by a financial institution or insurer.
5. Auger and paddle assemblies of snow throwers, tiller tines of roto-tillers, mower blades and mower deck housings, are specifically not warranted against impact damage, including but not limited to, abrasive damage.

Disclaimer of Consequential Damage and Limitation of Implied Warranties:

American Honda disclaims any responsibility for loss of time or use of the product, transportation, commercial loss, or any other incidental or consequential damage. Any implied warranties are limited to the duration of this written limited warranty. Some states do not allow limitations on how long an implied warranty lasts and/or do not allow the exclusion or limitation of incidental or consequential damages, so the above exclusions and limitations may not apply to you. This warranty gives you specific legal rights, and you may also have other rights which vary from state to state.

Honda Parts, Accessories, and Apparel

This warranty is limited to Honda Power Equipment parts, accessories, and apparel when distributed by American Honda Motor Co., Inc., 4900 Marconi Drive, Alpharetta, Georgia 30005-8847.

PRODUCTS COVERED BY THIS WARRANTY	LENGTH OF WARRANTY (from date of original retail purchase)	
	PRIVATE RESIDENTIAL	COMMERCIAL/RENTAL/ INSTITUTIONAL
Parts	6 months	3 months
Accessories	12 months	3 months
Apparel	6 months	3 months

To Qualify for This Warranty:

The parts, accessories, or apparel must be purchased from American Honda or a dealer authorized by American Honda to sell those products in the United States, Puerto Rico, and the U.S. Virgin Islands. Parts and Accessories must be purchased for installation on original Honda equipment or engines to be eligible for warranty coverage. Installing parts and accessories on non-Honda products or engines voids this warranty. You must be the first retail purchaser. This warranty is not transferable to subsequent owners.

What American Honda Will Repair or Replace Under Warranty:

American Honda will repair or replace, at its option, any Honda Power Equipment parts, accessories, replacement parts, or apparel that are proven to be defective in material or workmanship under normal use during the applicable warranty time period. Anything replaced under warranty becomes the property of American Honda Motor Co., Inc. The warranty on all parts, accessories, and apparel replaced under warranty will expire coincident with the original warranty on the replaced parts, accessories, or apparel.

Parts and accessories installed by a dealer who is authorized by American Honda to sell them will be repaired or replaced under warranty without charge for parts or labor. If installed by anyone else, parts and accessories will be repaired or replaced under warranty without charge for parts, but any labor charges will be the responsibility of the purchaser.

Apparel will be repaired or replaced under warranty without any charge.

To Obtain Warranty Service:

You must, at your expense, take the Honda Power Equipment part, accessory, apparel or the Honda Power Equipment on which the part or accessory is installed, and proof of purchase to any Honda Power Equipment dealer in the United States, Puerto Rico, or the U.S. Virgin Islands who is authorized to sell that product, during the dealer's normal business hours. To locate a dealer near you, visit our web site at PowerEquipment.Honda.com and click on Find a Dealer.

If you are unable to obtain warranty service or are dissatisfied with the warranty service you receive, contact the owner of the dealership involved; normally this will resolve the problem. However, if you should require further assistance, write or call the Power Equipment Customer Relations Department of American Honda Motor Co., Inc. See "How to Contact Honda" on page 20.

Exclusions:

This warranty does not extend to parts, accessories, or apparel affected or damaged by collision, normal wear, use in an application for which the product was not designed or any other misuse, neglect, incorporation or use of unsuitable attachments or parts, unauthorized alteration, improper installation, or any causes other than defects in material or workmanship of the product. Installing parts and accessories on non-Honda products or engines voids this warranty.

Disclaimer of Consequential Damage and Limitation of Implied Warranties:

American Honda disclaims any responsibility for loss of time or use of the product, or the power equipment on which the product is installed, transportation, commercial loss, or any other incidental or consequential damage. Any implied warranties are limited to the duration of this written warranty. Some states do not allow limitations on how long an implied warranty lasts and/or do not allow the exclusion or limitation of incidental or consequential damages, so the above exclusions and limitations may not apply to you.

This warranty gives you specific legal rights, and you may also have other rights which vary from state to state.

PWL50623-V

EMISSION SYSTEM WARRANTY

Your new Honda Power Equipment engine complies with the U.S. EPA and State of California (models certified for sale in California only) emission regulations. American Honda Motor Co., Inc. provides the emission warranty coverage for engines in the United States and its territories. In the remainder of this Emission Control System Warranty, American Honda Motor Co., Inc., will be referred to as Honda.

YOUR WARRANTY RIGHTS AND OBLIGATIONS:

CALIFORNIA

The California Air Resources Board and Honda are pleased to explain the emission control system warranty on your 2018 and later Honda Power Equipment engine. In California, new spark-ignited small off-road equipment engines must be designed, built, and equipped to meet the state's stringent anti-smog standards. Specific Honda products that do not meet the California emissions regulations can be identified by a “Not for sale in California” decal.

OTHER STATES AND U.S. TERRITORIES

In other areas of the United States, your engine must be designed, built, and equipped to meet the U.S. EPA emission standards for spark-ignited engines at or below 19 kilowatts.

ALL OF THE UNITED STATES

Honda must warrant the emission control system on your power equipment engine for the period of time listed below, provided there has been no abuse, neglect, or improper maintenance of your power equipment engine. Where a warrantable condition exists, Honda will repair your power equipment engine at no cost to you including diagnosis, parts, and labor.

Your emission control system may include such parts as the carburetor or fuel injection system, the ignition system, and catalytic converter. Also included may be hoses, connectors, and other emission-related assemblies (see the adjacent column for additional covered parts).

OWNER'S WARRANTY RESPONSIBILITY:

As the power equipment engine owner, you are responsible for completing all required maintenance listed in your owner's manual. Honda recommends that you retain all receipts covering maintenance on your power equipment engine, but Honda cannot deny warranty coverage solely for the lack of receipts or for your failure to ensure that all scheduled maintenance has been completed.

As the power equipment engine owner, you should however be aware Honda may deny you warranty coverage if your power equipment engine or a part has failed due to abuse, neglect, improper maintenance, or unapproved modifications.

You are responsible for presenting your power equipment engine to a Honda Power Equipment dealer as soon as a problem exists. The emission related warranty repairs should be completed in a reasonable amount of time, not to exceed 30 days.

If you have any questions regarding your emission warranty rights and responsibilities, you should contact the Honda office in your region:

American Honda Motor Co., Inc.
Power Equipment Customer Relations
4900 Marconi Drive
Alpharetta, Georgia 30005-8847
Telephone: (888) 888-3139
Email: powerequipmentemissions@ahm.honda.com

WARRANTY COVERAGE:

Honda power equipment engines sold in the United States are covered by this warranty for a period of two years from the date of delivery to the original retail purchaser or the length of the Honda Distributor’s Limited Warranty, whichever is longer. This warranty is transferable to each subsequent purchaser for the duration of the warranty period.

If any emission-related part on your engine is defective, the part will be repaired or replaced by Honda without charge for diagnosis, parts, or labor. All defective parts replaced under this warranty become the property of Honda. Only Honda approved replacement parts may be used in the performance of any warranty repairs and must be provided without charge to the owner. A list of warranted parts is on the adjacent column of this warranty statement. Normal maintenance items, such as spark plugs and filters, that are on the warranted parts list are warranted up to their required replacement interval only.

Honda will also replace other engine components damaged by a failure of any warranted part during the warranty period.

Honda cannot deny coverage under the emission warranty solely for use of non-Honda replacement parts or service performed at a location other than an authorized Honda dealership; however, use of a part that is not functionally identical to the original equipment part in any respect that may in any way affect emissions (including durability) could result in denial of coverage. If such a non-Honda replacement part is used in the repair or maintenance of your engine, and an authorized Honda dealer determines it is defective or causes a failure of a warranted part, your claim for repair of your engine may be denied. If the part in question is not related to the reason your engine requires repair, your claim will not be denied.

TO OBTAIN WARRANTY SERVICE:

You must, at your own expense, take your Honda Power Equipment engine or the product on which it is installed, along with your sales registration card or other proof of original purchase date, to any Honda Power Equipment dealer who is authorized by Honda to sell and service that Honda product during their normal business hours. Claims for repair or adjustment found to be caused solely by defects in material or workmanship will not be denied because the engine was not properly maintained and used.

If you are unable to obtain emission warranty service or are dissatisfied with the warranty service you received, contact the owner of the dealership involved. Normally this should resolve your problem. However, if you require further assistance, contact the Honda office in your region. Refer to adjacent column for contact information.

EXCLUSIONS:

Failures other than those resulting from defects in material or workmanship are not covered by this warranty. This warranty does not extend to emission control systems or parts that are affected or damaged by owner abuse, neglect, improper maintenance, misuse, misfueling, improper storage, collision, the incorporation of, or use of, unsuitable attachments, or the unauthorized alteration of any part.

This warranty does not cover replacement of expendable maintenance items made in connection with required maintenance service after the item’s first scheduled replacement as listed in the maintenance section of the product owner’s manual, such as: spark plugs and filters.

DISCLAIMER OF CONSEQUENTIAL DAMAGE AND LIMITATION OF IMPLIED WARRANTIES:

American Honda Motor Co., Inc. disclaims any responsibility for incidental or consequential damages such as loss of time or the use of the power equipment, or any commercial loss due to the failure of the equipment; and any implied warranties are limited to the duration of this written warranty. This warranty is applicable only where the California and U.S. EPA emission control system warranty regulation is in effect.

SYSTEMS COVERED BY THIS WARRANTY:	PARTS DESCRIPTION:
Fuel Metering	Carburetor assembly (includes starting enrichment system), Oxygen sensor, Throttle body, Engine temperature sensor, Engine control module, Fuel injector, Fuel regulator, Intake manifold
Evaporative	Fuel tank, Fuel cap, Fuel hoses, Vapor hoses, Carbon canister, Canister mounting brackets, Fuel strainer, Fuel valve, Fuel pump, Fuel hose joint, Canister purge hose joint
Exhaust	Catalyst, Exhaust pipe, Muffler (with catalyst)
Air Induction	Air filter housing, Air filter element*
Ignition	Flywheel comp., Flywheel magneto, Ignition pulse generator, Crankshaft position sensor, Power coil, Ignition coil assembly, Ignition control module, Spark plug cap, Spark plug*
Crankcase Emission Control	Crankcase breather tube, Breather valve assembly, Oil filler cap
Miscellaneous Parts	Tubing, fittings, seals, gaskets, and clamps associated with these listed systems.

Note: This list applies to parts supplied by Honda and does not cover parts supplied by the equipment manufacturer. Please see the original equipment manufacturer’s emissions warranty for non-Honda parts.

* Covered up to the first required replacement only. See the Maintenance Schedule on page 10.

PWL50975-S

PRODUCT REGISTRATION

Thank you for choosing Honda!
Please register your lawn mower within 30 days of purchase to ensure you receive important service information in the event of a product update or recall and for added coverage during certain sales promotions.

Your information will remain confidential.
It will not be released to any other company or organization.

There are three ways to register, select one:

- Complete and mail the postage paid card shown below
- Complete and submit the on-line form at powerequipment.honda.com
- Scan the QR code below and then complete and submit the on-line form





Print your 7 digit serial number here.

Serial number M A G A — _____ *** Dealer Store number** _____ *** Dealer ZIP code** _____

*If available

Owner's Last Name _____ **First Name** _____

Company Name *(commercial/rental users)* _____ **Telephone** (___) ___ — ____

Address _____

City _____ **State** __ **ZIP Code** _____ — ____

E-mail address _____

Date of Purchase __ — __ — __ (MONTH — DAY — YEAR)

Purchased Via *(check one)* ☐ **In Store** ☐ **Online**

Application *(check one)* ☐ **Commercial** *(professional use)* ☐ **Non-commercial** *(private, homeowner use)* ☐ **Rental** *(for-hire use)*

1. Go to: powerequipment.honda.com to register your unit.

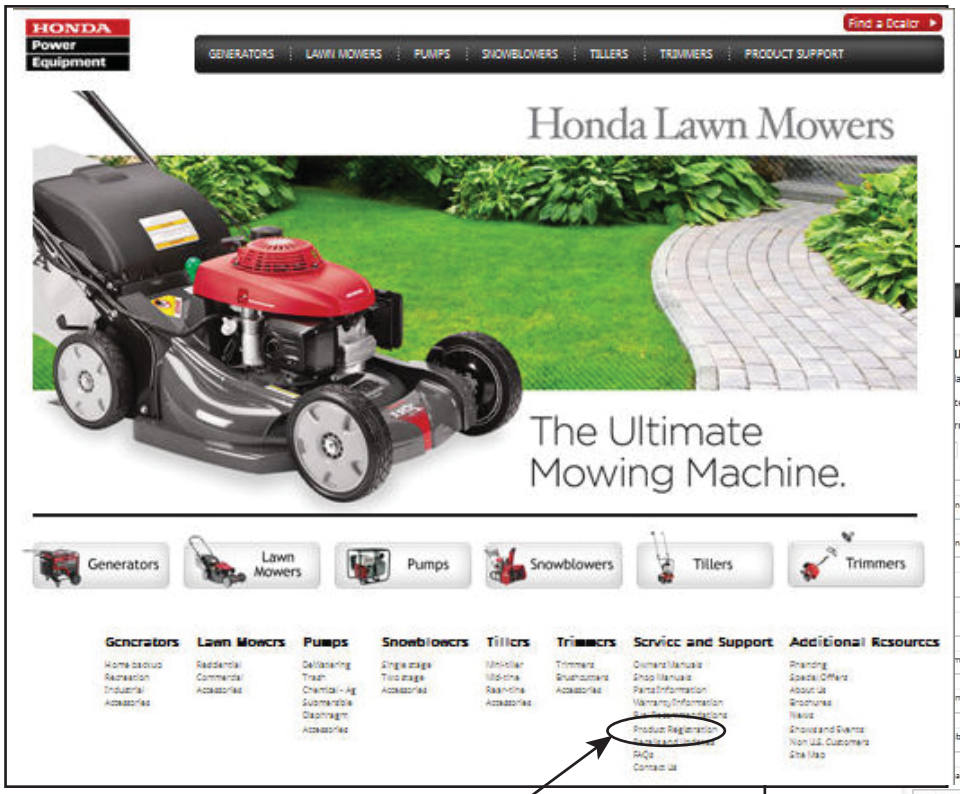

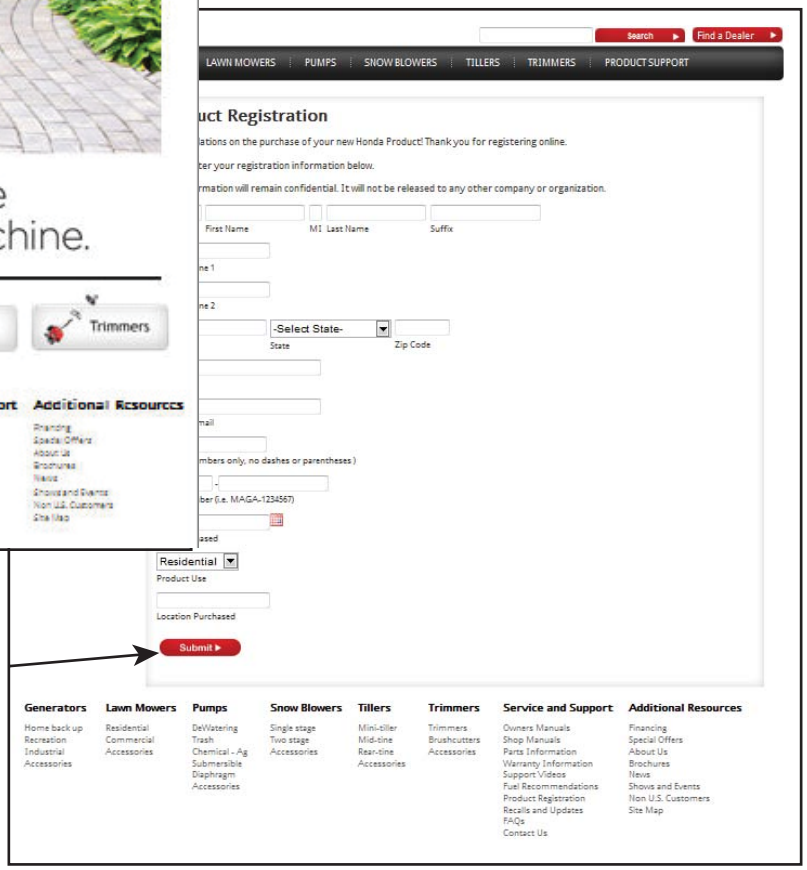

2. Click on **Product Registration**.
3. Complete the required information and click **Submit**.

It's that simple!

Product Registration

NO POSTAGE
NECESSARY
IF MAILED
IN THE
UNITED STATES

BUSINESS REPLY MAIL
FIRST-CLASS MAIL PERMIT NO. 117 ALPHARETTA GA

POSTAGE WILL BE PAID BY ADDRESSEE

Power Equipment Division
American Honda Motor Co. Inc.
4900 Marconi Dr
Alpharetta GA 30005-9956

EM5 K5

HPE.2017.12
PRINTED IN U.S.A.