HONDA

Power

Equipment

Owner's Manual

TRASH PUMP

WT20X•WT30X•WT40X

Click here to save this manual to your computer.

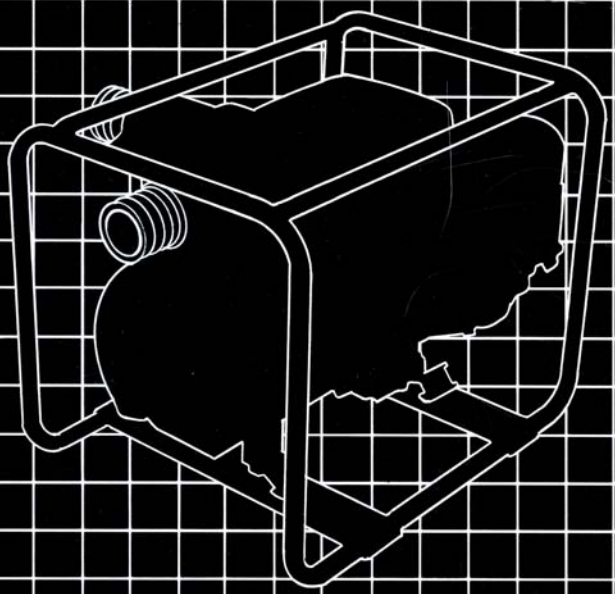

© HONDA MOTOR CO., LTD. 2000

M

⚠ WARNING: ⚠

The engine exhaust from this product contains chemicals known to the State of California to cause cancer, birth defects or other reproductive harm.

Keep this owner's manual handy, so you can refer to it at any time. This owner's manual is considered a permanent part of the water pump and should remain with the water pump if resold.

The information and specifications included in this publication were in effect at the time of approval for printing. Honda Motor Co., Ltd. reserves the right, however, to discontinue or change specifications or design at any time without notice and without incurring any obligation whatever. No part of this publication may be reproduced without written permission.

INTRODUCTION

Congratulations on your selection of a Honda water pump. We are certain you will be pleased with your purchase of one of the finest water pumps on the market.

We want to help you get the best results from your new water pump and to operate it safely. This manual contains the information on how to do that; please read it carefully.

As you read this manual, you will find information preceded by a NOTICE symbol. That information is intended to help you avoid damage to your water pump, other property, or the environment.

We suggest you read the warranty policy to fully understand its coverage and your responsibilities of ownership. The warranty policy is a separate document that should have been given to you by your dealer.

When your water pump needs scheduled maintenance, keep in mind that your Honda servicing dealer is specially trained in servicing Honda water pumps. Your Honda servicing dealer is dedicated to your satisfaction and will be pleased to answer your questions and concerns.

Best Wishes,
Honda Motor Co., Ltd.

INTRODUCTION

A FEW WORDS ABOUT SAFETY

Your safety and the safety of others are very important. And using this water pump safely is an important responsibility.

To help you make informed decisions about safety, we have provided operating procedures and other information on labels and in this manual. This information alerts you to potential hazards that could hurt you or others.

Of course, it is not practical or possible to warn you about all the hazards associated with operating or maintaining a water pump. You must use your own good judgment.

You will find important safety information in a variety of forms, including:

- **Safety Labels** — on the pump.
- **Safety Messages** — preceded by a safety alert symbol ⚠ and one of three signal words, DANGER, WARNING, or CAUTION.

  These signal words mean:

  ⚠ DANGER You WILL be KILLED or SERIOUSLY HURT if you don't follow instructions.

  ⚠ WARNING You CAN be KILLED or SERIOUSLY HURT if you don't follow instructions.

  ⚠ CAUTION You CAN be HURT if you don't follow instructions.

- **Safety Headings** — such as *IMPORTANT SAFETY INFORMATION.*
- **Safety Section** — such as *PUMP SAFETY.*
- **Instructions** — how to use this pump correctly and safely.

This entire book is filled with important safety information — please read it carefully.

CONTENTS

PUMP SAFETY **5**
IMPORTANT SAFETY INFORMATION 5
SAFETY LABEL LOCATIONS 7

CONTROLS & FEATURES **8**
COMPONENT & CONTROL LOCATIONS 8
CONTROLS 9
Fuel Valve Lever 9
Ignition Switch 9
Choke Lever 10
Throttle Lever 10
Recoil Starter Grip 11
FEATURES 11
Oil Alert® System 11

BEFORE OPERATION **12**
ARE YOU READY TO GET STARTED? 12
IS YOUR PUMP READY TO GO? 13
Check the General Condition of the Pump 13
Check the Suction and Discharge Hoses 14
Check the Engine 14

OPERATION **15**
SAFE OPERATING PRECAUTIONS 15
PUMP PLACEMENT 16
SUCTION HOSE INSTALLATION 17
DISCHARGE HOSE INSTALLATION 18
PRIMING THE PUMP 18
STARTING THE ENGINE 19
SETTING ENGINE SPEED 21
STOPPING THE ENGINE 22

SERVICING YOUR HONDA PUMP **24**
THE IMPORTANCE OF MAINTENANCE 24
MAINTENANCE SAFETY 25
MAINTENANCE SCHEDULE 26
REFUELING 27
FUEL RECOMMENDATIONS 28
ENGINE OIL LEVEL CHECK 29
ENGINE OIL CHANGE 30

CONTENTS

SERVICING YOUR HONDA PUMP (continued)
ENGINE OIL RECOMMENDATIONS 31
AIR FILTER INSPECTION 32
AIR FILTER CLEANING 33
SEDIMENT CUP CLEANING 34
SPARK PLUG SERVICE 35
IDLE SPEED ADJUSTMENT 37
SPARK ARRESTER SERVICE (optional equipment) 38
PUMP CASING CLEANING 40

STORAGE 41
STORAGE PREPARATION 41
Cleaning 41
Fuel 42
Engine Oil 45
STORAGE PRECAUTIONS 45
REMOVAL FROM STORAGE 46

TRANSPORTING 47

TAKING CARE OF UNEXPECTED PROBLEMS 48
ENGINE 48
Engine Will Not Start 48
Engine Lacks Power 48
PUMP 49
No Pump Output 49
Low Pump Output 49

TECHNICAL & CONSUMER INFORMATION 50
TECHNICAL INFORMATION 50
Serial Number Location 50
Carburetor Modification for High Altitude Operation 51
Oxygenated Fuels 52
Emission Control System Information 53
Air Index 55
Specifications 56
CONSUMER INFORMATION 62
Honda Publications 62
Warranty Service Information 63

QUICK REFERENCE INFORMATION ..... Inside back cover

PUMP SAFETY

IMPORTANT SAFETY INFORMATION

Honda WT20X, WT30X, and WT40X pumps are designed to pump only water that is not intended for human consumption, and other uses can result in injury to the operator or damage to the pump and other property.

Most accidents can be prevented if you follow all instructions in this manual and on the pump. The most common hazards are discussed below, along with the best way to protect yourself and others.

Operator Responsibility

It is the operator's responsibility to provide the necessary safeguards to protect people and property. Know how to stop the pump quickly in case of emergency. If you leave the pump for any reason, always turn the engine off. Understand the use of all controls and connections.

Be sure that anyone who operates the pump receives proper instruction. Do not let children operate the pump. Keep children and pets away from the area of operation.

Pump Operation

Pump only water that is not intended for human consumption. Pumping flammable liquids, such as gasoline or fuel oils, can result in a fire or explosion, causing serious injury. Pumping sea water, beverages, acids, chemical solutions, or any other liquid that promotes corrosion can damage the pump.

Refuel With Care

Gasoline is extremely flammable, and gasoline vapor can explode. Refuel outdoors, in a well-ventilated area, with the engine stopped and the pump on a level surface. Do not fill the fuel tank above the fuel strainer shoulder. Never smoke near gasoline, and keep other flames and sparks away. Always store gasoline in an approved container. Make sure that any spilled fuel has been wiped up before starting the engine.

Hot Exhaust

The muffler becomes very hot during operation and remains hot for a while after stopping the engine. Be careful not to touch the muffler while it is hot. Let the engine cool before transporting the pump or storing it indoors.

To prevent fire hazards, keep the pump at least 3 feet (1 meter) away from building walls and other equipment during operation. Do not place flammable objects close to the engine.

Carbon Monoxide Hazard

Exhaust gas contains poisonous carbon monoxide. Avoid inhalation of exhaust gas. Never run the engine in a closed garage or confined area.

SAFETY LABEL LOCATIONS

The labels shown here contain important safety information. Please read them carefully. These labels are considered permanent parts of your pump. If a label comes off or becomes hard to read, contact an authorized Honda servicing dealer for a replacement.

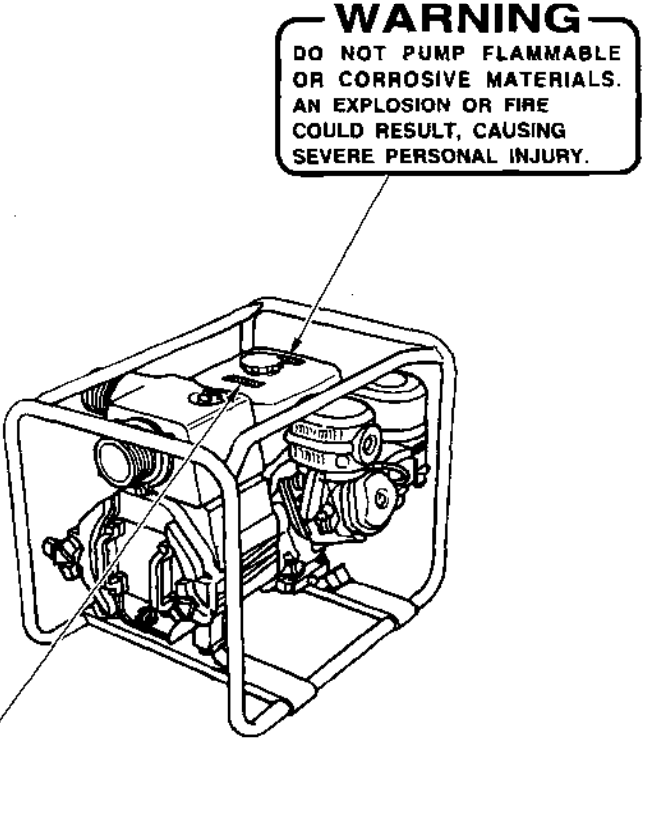

PUMP CAUTION LABEL

CAUTION! DO NOT RUN WITHOUT PRIMING WATER. DRY OPERATION WILL BURN THE SEAL.	PRECAUCION! NO HAGA FUNCIONAR SIN CEBADO FUNCIONAMIENTO SECO QUEMA EL SELLO.
VORSICHT! VOR DEM ANLAUFEN BEI TESTUND LEERLAUF GEHÄUSE MIT WASSER BEFÜLLEN. TROCKEN-AUF ZERSTORT DIE DICHTUNGEN.	PRÉCAUTION! NE FAITE PAS FONCTIONNER SANS AMORSAGE. FONCTIONNEMENT AU SEC BRULE LE JOINT D'ETANCHEITE.

CONTROLS & FEATURES

COMPONENT & CONTROL LOCATIONS

<WT20X>

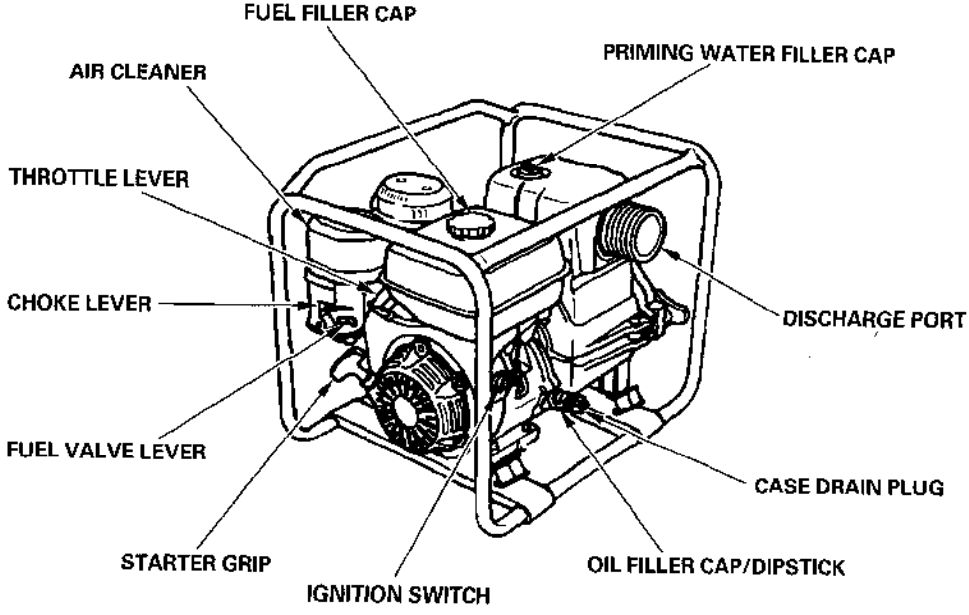

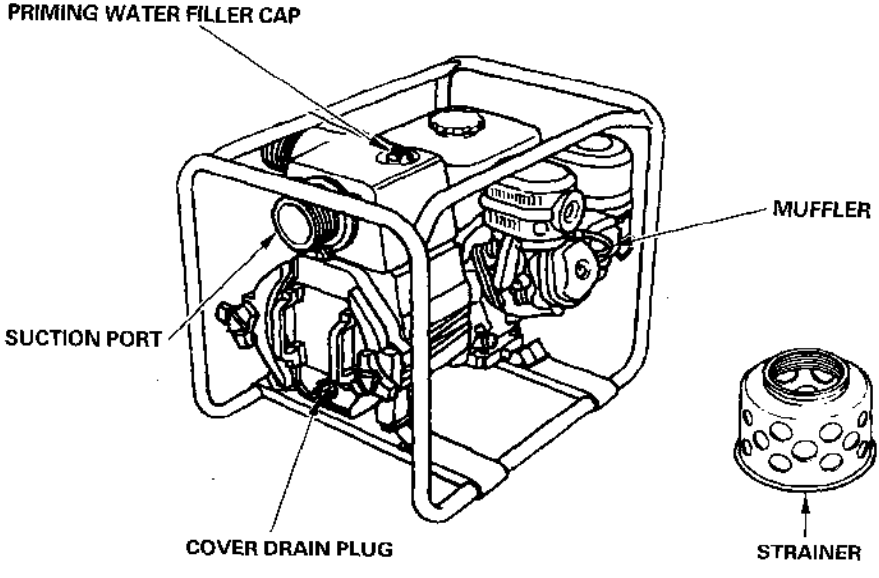

CONTROLS

Fuel Valve Lever

The fuel valve opens and closes the connection between the fuel tank and the carburetor.

The fuel valve lever must be in the ON position for the engine to run.

When the engine is not in use, leave the fuel valve lever in the OFF position to prevent carburetor flooding and to reduce the possibility of fuel leakage.

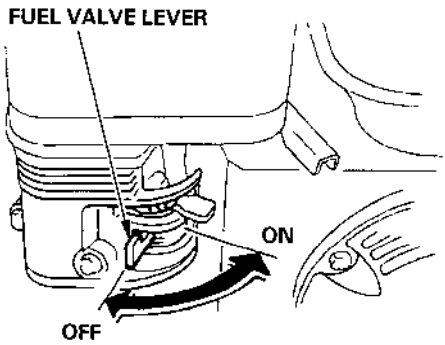

Ignition Switch

The ignition switch controls the ignition system.

The ignition switch must be in the ON position for the engine to run.

Turning the ignition switch to the OFF position stops the engine.

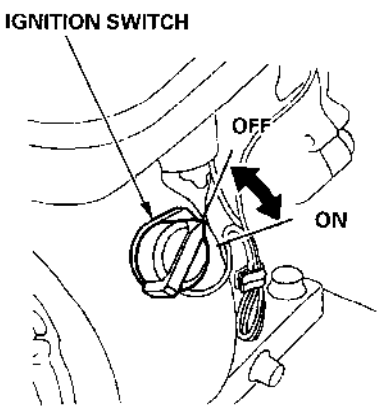

Choke Lever

The choke lever opens and closes the choke valve in the carburetor.

The CLOSED position enriches the fuel mixture for starting a cold engine.

The OPEN position provides the correct fuel mixture for operation after starting, and for restarting a warm engine.

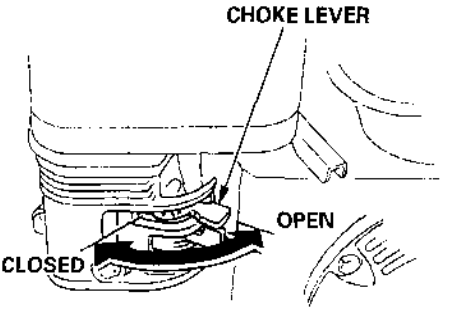

Throttle Lever

The throttle lever controls engine speed.

Moving the throttle lever in the directions shown makes the engine run faster or slower.

Pump output is controlled by adjusting the throttle lever. At maximum throttle position, the pump will deliver the highest output volume. Moving the throttle lever toward the idle position will decrease the output volume of the pump.

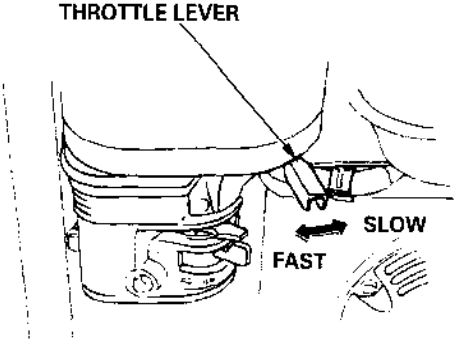

Recoil Starter Grip

Pulling the starter grip operates the recoil starter to crank the engine.

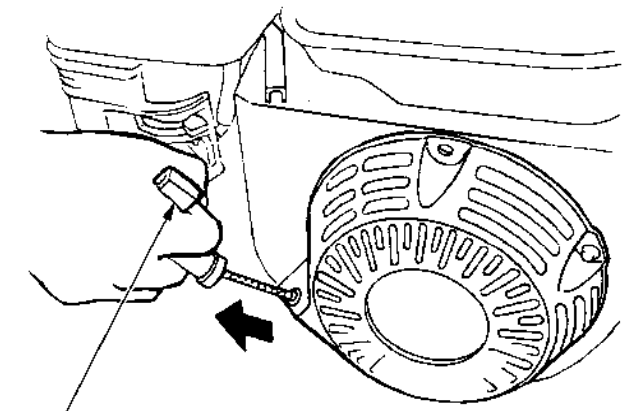

FEATURES

Oil Alert® System

The Oil Alert® system is designed to prevent engine damage caused by an insufficient amount of oil in the crankcase. Before the oil level in the crankcase can fall below a safe limit, the Oil Alert® system will automatically stop the engine (the ignition switch will remain in the ON position).

If the engine stops and will not restart, check the engine oil level (page 29) before troubleshooting in other areas.

BEFORE OPERATION

ARE YOU READY TO GET STARTED?

Your safety is your responsibility. A little time spent in preparation will significantly reduce your risk of injury.

Knowledge

Read and understand this manual. Know what the controls do and how to operate them.

Familiarize yourself with the pump and its operation before you begin pumping. Know what to do in case of emergencies.

Be sure of what you are pumping. This pump is designed to pump only water that is not intended for human consumption.

IS YOUR PUMP READY TO GO?

For your safety, and to maximize the service life of your equipment, it is very important to take a few moments before you operate the pump to check its condition. Be sure to take care of any problem you find, or have your servicing dealer correct it, before you operate the pump.

⚠ WARNING

Improperly maintaining this pump, or failing to correct a problem before operation, could cause a malfunction in which you could be seriously injured.

Always perform a preoperation inspection before each operation, and correct any problem.

Exhaust gas contains poisonous carbon monoxide. Avoid inhalation of exhaust gas. Never run the engine in a closed garage or confined area.

To prevent fire hazards, keep the pump at least 3 feet (1 meter) away from building walls and other equipment during operation. Do not place flammable objects close to the engine.

Before beginning your preoperation checks, be sure the pump is on a level surface and the ignition switch is in the OFF position.

Check the General Condition of the Pump

- Look around and underneath the pump for signs of oil or gasoline leaks.
- Remove any excessive dirt or debris, especially around the engine muffler, and recoil starter.
- Look for signs of damage.
- Check that all nuts, bolts, screws, hose connectors and clamps are tightened.

Check the Suction and Discharge Hoses

- Check the general condition of the hoses. Be sure the hoses are in serviceable condition before connecting them to the pump. Remember that the suction hose must be reinforced construction to prevent hose collapse.

- Check that the sealing washer in the suction hose connector is in good condition (see page 17).

- Check that the hose connectors and clamps are securely installed (see pages 17 & 18).

- Check that the strainer is in good condition and is installed on the suction hose (see page 17).

Check the Engine

- Check the oil level (see page 29). To avoid the inconvenience of an unexpected shutdown by the Oil Alert® system, always check the engine oil level before startup.

- Check the air filter (see page 32). A dirty air filter will restrict air flow to the carburetor, reducing engine and pump performance.

- Check the fuel level (see page 27). Starting with a full tank will help to eliminate or reduce operating interruptions for refueling.

OPERATION

SAFE OPERATING PRECAUTIONS

To safely realize the full potential of this pump, you need a complete understanding of its operation and a certain amount of practice with its controls.

Before operating the pump for the first time, please review the *IMPORTANT SAFETY INFORMATION* on page 5 and the chapter titled *BEFORE OPERATION.*

For your safety, avoid starting or operating the engine in an enclosed area, such as a garage. Your engine's exhaust contains poisonous carbon monoxide gas which can collect rapidly in an enclosed area and cause illness or death.

Pump only water that is not intended for human consumption. Pumping flammable liquids, such as gasoline or fuel oils, can result in a fire or explosion, causing serious injury. Pumping sea water, beverages, acids, chemical solutions, or any other liquid that promotes corrosion can damage the pump.

PUMP PLACEMENT

For best pump performance, place the pump near the water level, and use hoses that are no longer than necessary. That will enable the pump to produce the greatest output with the least self-priming time.

As *head* (pumping height) increases, pump output decreases. Maximum head specifications and pump performance curves are shown in the tables on pages 57 , 59 and 61 . The length, type, and size of the suction and discharge hoses can also significantly affect pump output.

Discharge head capability is always greater than suction head capability, so it is important for suction head to be the shorter part of total head.

Minimizing suction head (placing the pump near the water level) is also very important for reducing self-priming time. *Self-priming time* is the time it takes the pump to bring water the distance of the suction head during initial operation.

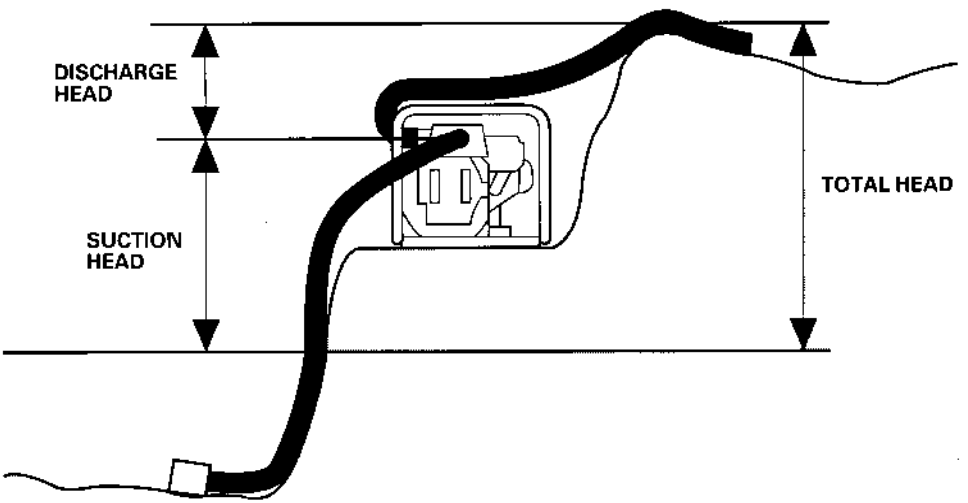

SUCTION HOSE INSTALLATION

Use the commercially available hose and hose connector with the hose clamp provided with the pump. The suction hose must be reinforced with a noncollapsible wall or braided wire construction.

The suction hose should be no longer than necessary. Pump performance is best when the pump is near the water level, and the hoses are short.

Use a hose clamp to securely fasten the hose connector to the suction hose in order to prevent air leakage and loss of suction. Verify that the hose connector sealing washer is in good condition.

Install the strainer (provided with the pump) on the other end of the suction hose, and secure it with a hose clamp. The strainer will help to prevent the pump from becoming clogged or damaged by debris.

Securely tighten the hose connector on the pump suction port.

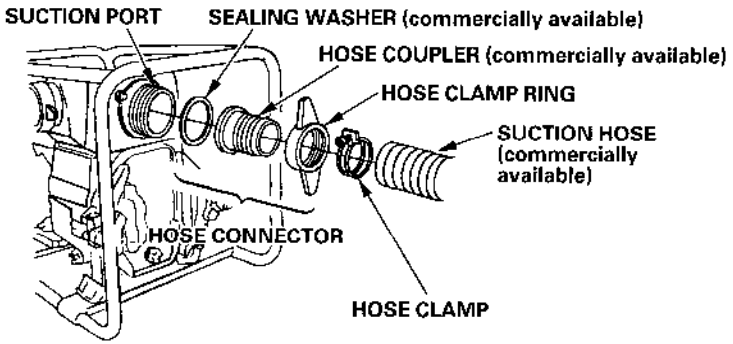

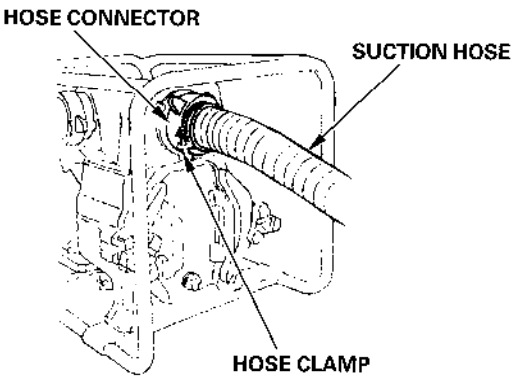

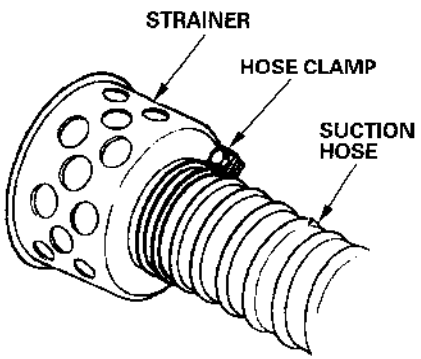

DISCHARGE HOSE INSTALLATION

Use a commercially available hose with the hose connector and clamp provided with the pump.

It is best to use a short, large-diameter hose, because that will reduce fluid friction and improve pump performance. A long or small-diameter hose will increase fluid friction and reduce pump output.

Tighten the hose clamp securely to prevent the discharge hose from disconnecting under high pressure.

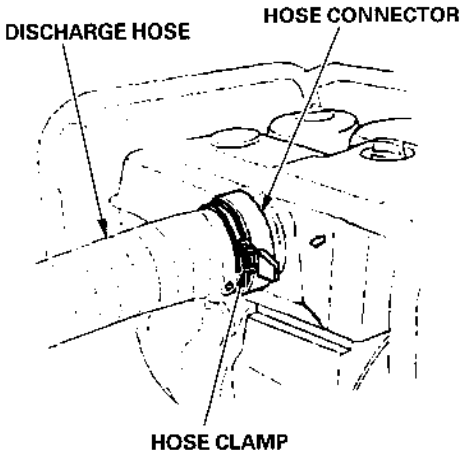

PRIMING THE PUMP

Before starting the engine, remove the filler cap from the pump chamber, and completely fill the pump chamber with water. Reinstall the filler cap, and tighten it securely.

NOTICE

Operating the pump dry will destroy the pump seal. If the pump has been operated dry, stop the engine immediately, and allow the pump to cool before priming.

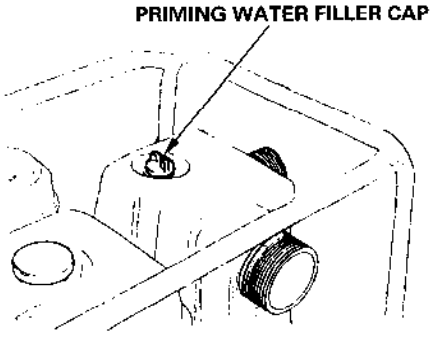

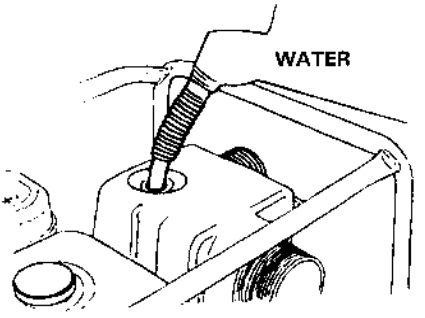

STARTING THE ENGINE

1. Move the fuel valve lever to the ON position.

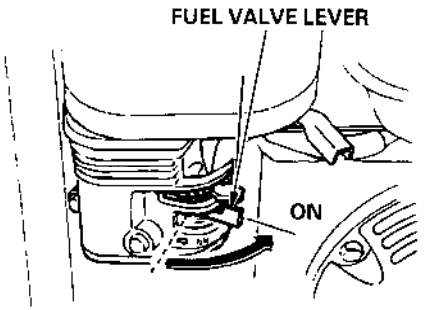

2. To start a cold engine, move the choke lever to the CLOSED position.

   To restart a warm engine, leave the choke lever in the OPEN position.

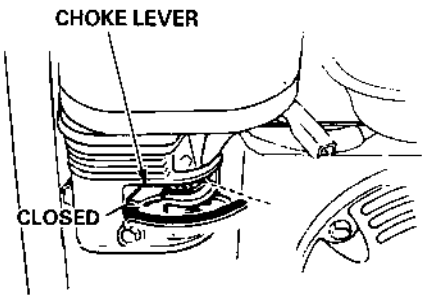

3. Move the throttle lever away from the SLOW position, about 1/3 of the way toward the FAST position.

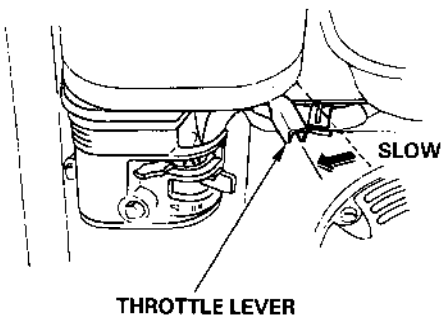

4. Turn the ignition switch to the ON position.

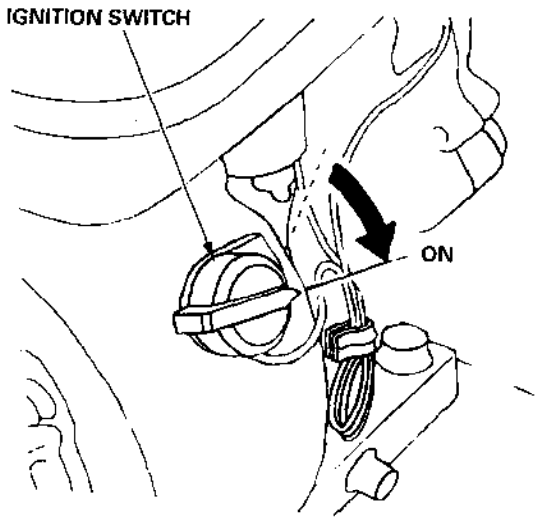

5. Pull the starter grip lightly until you feel resistance, then pull briskly. Return the starter grip gently.

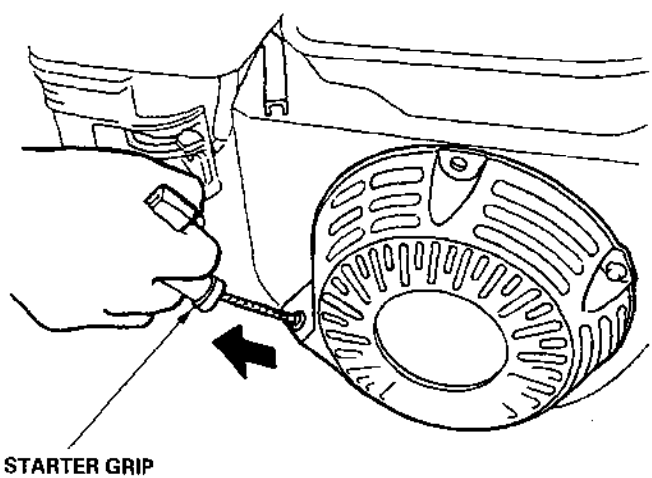

6. If the choke lever was moved to the CLOSED position to start the engine, gradually move it to the OPEN position as the engine warms up.

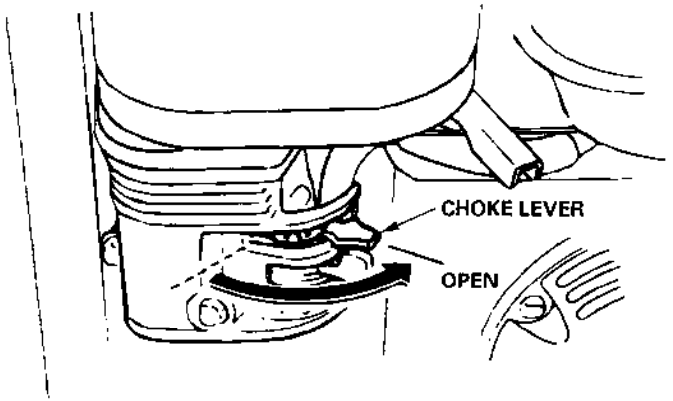

SETTING ENGINE SPEED

After starting the engine, move the throttle lever to the FAST position for self-priming, and check pump output.

Pump output is controlled by adjusting engine speed. Moving the throttle lever in the FAST direction will increase pump output, and moving the throttle lever in the SLOW direction will decrease pump output.

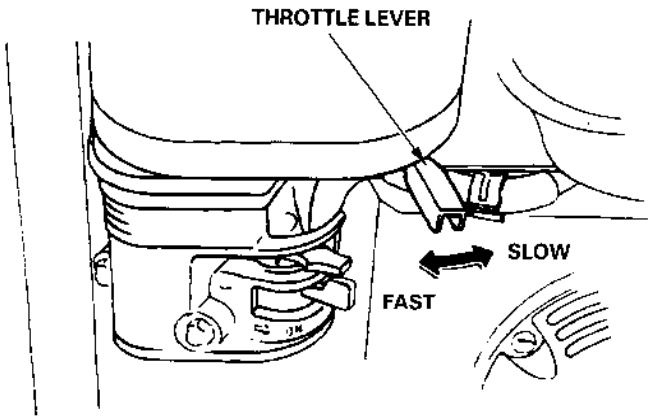

STOPPING THE ENGINE

To stop the engine in an emergency, simply turn the ignition switch to the OFF position. Under normal conditions, use the following procedure.

1. Move the throttle lever to the SLOW position.

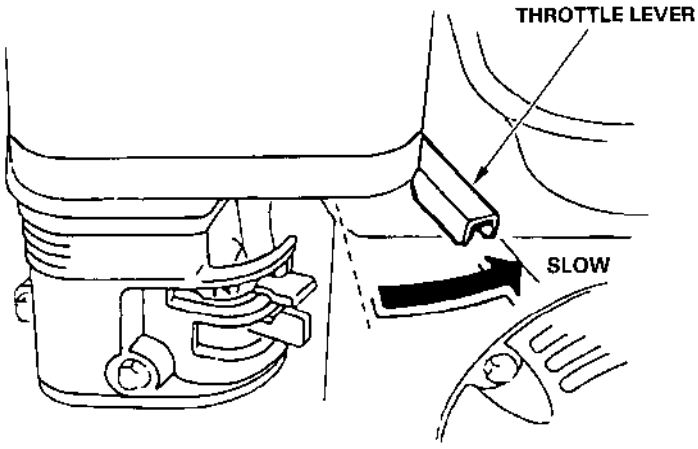

2. Turn the ignition switch to the OFF position.

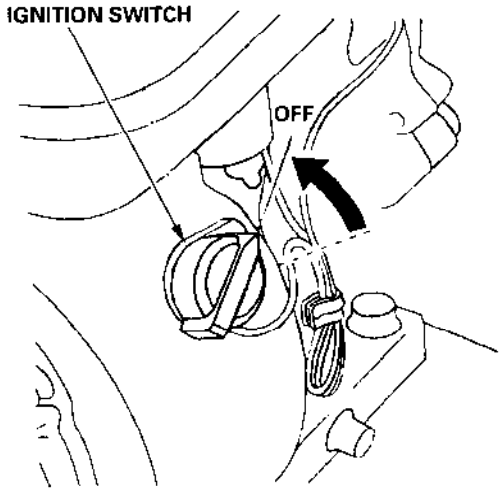

3. Turn the fuel valve lever to the OFF position.

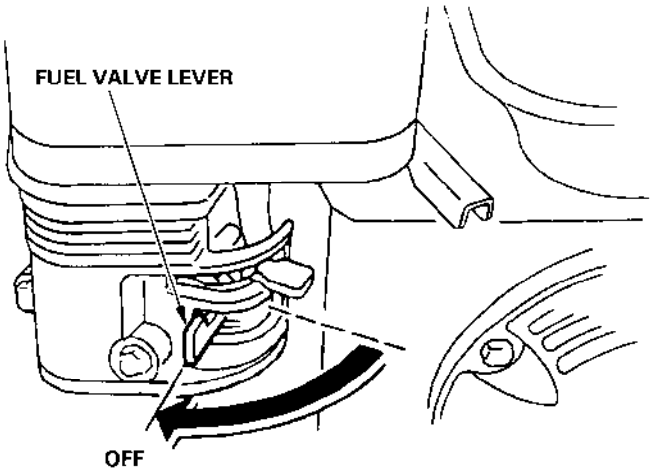

After use, remove the case and cover drain plugs (see page 42), and drain the pump chamber. Remove the filler cap, and flush the pump chamber with clean, fresh water. Allow the water to drain from the pump chamber, then reinstall the filler cap and drain plug.

SERVICING YOUR HONDA PUMP

THE IMPORTANCE OF MAINTENANCE

Good maintenance is essential for safe, economical, and trouble-free operation. It will also help reduce air pollution.

⚠ WARNING

Improperly maintaining this pump, or failure to correct a problem before operation, can cause a malfunction in which you can be seriously hurt or killed.

Always follow the inspection and maintenance recommendations and schedules in this owner's manual.

To help you properly care for your pump, the following pages include a maintenance schedule, routine inspection procedures, and simple maintenance procedures using basic hand tools. Other service tasks that are more difficult, or require special tools, are best handled by professionals and are normally performed by a Honda technician or other qualified mechanic.

The maintenance schedule applies to normal operating conditions. If you operate your pump under severe conditions, such as sustained high-load or high-temperature operation, or use in unusually wet or dusty conditions, consult your servicing dealer for recommendations applicable to your individual needs and use.

Remember that your servicing dealer knows your pump best and is fully equipped to maintain and repair it.

To ensure the best quality and reliability, use only new, genuine Honda parts or their equivalents for repair and replacement.

Maintenance, replacement, or repair of emission control devices and systems may be performed by any engine repair establishment or individual, using parts that are "certified" to EPA standards.

MAINTENANCE SAFETY

Some of the most important safety precautions follow. However, we cannot warn you of every conceivable hazard that can arise in performing maintenance. Only you can decide whether or not you should perform a given task.

⚠ WARNING

Failure to properly follow maintenance instructions and precautions can cause you to be seriously hurt or killed.

Always follow the procedures and precautions in the owner's manual.

Safety Precautions

- Make sure the engine is off before you begin any maintenance or repairs. This will eliminate several potential hazards:

  —**Carbon monoxide poisoning from engine exhaust.**
  Be sure there is adequate ventilation whenever you operate the engine.

  —**Burns from hot parts.**
  Let the engine and exhaust system cool before touching.

  —**Injury from moving parts.**
  Do not run the engine unless instructed to do so.

- Read the instructions before you begin, and make sure you have the tools and skills required.

- To reduce the possibility of fire or explosion, be careful when working around gasoline. Use only a nonflammable solvent, not gasoline, to clean parts. Keep cigarettes, sparks, and flames away from all fuel-related parts.

SERVICING YOUR HONDA PUMP

MAINTENANCE SCHEDULE

	ITEM / REGULAR SERVICE PERIOD (3) Perform at every indicated month or operating hour interval, whichever comes first.		Before each use	First month or 20 hrs.	Every 3 months or 50 hrs.	Every 6 months or 100 hrs.	Every year or 300 hrs.	Refer to page
•	Engine oil	Check	○					29
		Replace		○		○		30
•	Air filter	Check	○					32
		Clean			○ (1)			33
		Replace					○ *	33
•	Sediment cup	Clean				○		34
•	Spark plug	Check-Adjust				○		35
		Replace					○	
	Spark arrester (optional parts)	Clean				○		38
•	Idle speed	Check-Adjust					○ (2)	37
•	Valve clearance	Check-Adjust					○ (2)	—
•	Combustion chamber	Clean					After every 500 hrs. (2)	—
•	Fuel tank and filter	Clean					○ (2)	—
•	Fuel tube	Check	Every 2 years (Replace if necessary) (2)					—
	Impeller	Check					○ (2)	—
	Impeller clearance	Check					○ (2)	—
	Pump inlet valve	Check					○ (2)	—

• Emission-related items.

* Replace the paper air filter element only.

(1) Service more frequently when used in dusty areas.

(2) These items should be serviced by your servicing dealer, unless you have the proper tools and are mechanically proficient. Refer to Honda shop manual for service procedures.

(3) For commercial use, log hours of operation to determine proper maintenance intervals.

REFUELING

Fuel tank capacities
WT20X: 0.95 US gal (3.6 ℓ , 0.79 Imp gal)
WT30X: 1.59 US gal (6.0 ℓ , 1.32 Imp gal)
WT40X: 1.72 US gal (6.5 ℓ , 1.43 Imp gal)

With the engine stopped, remove the fuel tank cap and check the fuel level. Refill the tank if the fuel level is low.

⚠ WARNING

Gasoline is highly flammable and explosive.

You can be burned or seriously injured when handling fuel.

- Stop the engine and keep heat, sparks, and flame away.
- Handle fuel only outdoors.
- Wipe up spills immediately.

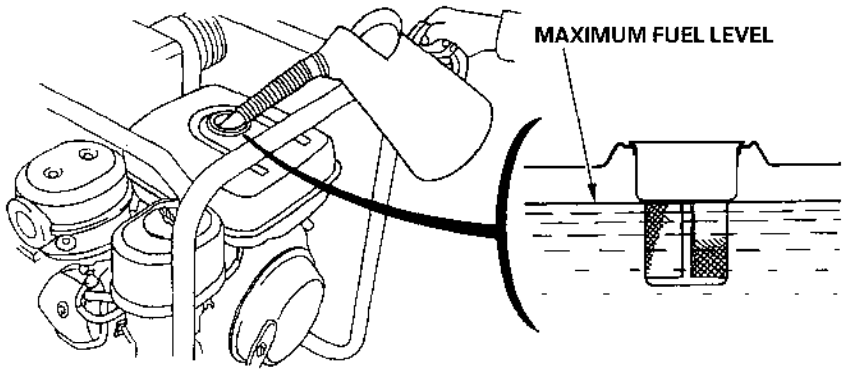

SERVICING YOUR HONDA PUMP

Refuel in a well-ventilated area before starting the engine. If the engine has been running, allow it to cool. Refuel carefully to avoid spilling fuel. Do not fill the fuel tank above the fuel strainer shoulder. After refueling, tighten the fuel tank cap securely.

Never refuel the engine inside a building where gasoline fumes may reach flames or sparks. Keep gasoline away from appliance pilot lights, barbecues, electric appliances, power tools, etc.

Spilled fuel is not only a fire hazard, it causes environmental damage. Wipe up spills immediately.

NOTICE

Fuel can damage paint and plastic. Be careful not to spill fuel when filling your fuel tank. Damage caused by spilled fuel is not covered under warranty.

FUEL RECOMMENDATIONS

Use unleaded gasoline with a pump octane rating of 86 or higher.

These engines are certified to operate on unleaded gasoline. Unleaded gasoline produces fewer engine and spark plug deposits and extends exhaust system life.

Never use stale or contaminated gasoline or an oil/gasoline mixture. Avoid getting dirt or water in the fuel tank.

Occasionally you may hear a light "spark knock" or "pinging" (metallic rapping noise) while operating under heavy loads. This is no cause for concern.

If spark knock or pinging occurs at a steady engine speed, under normal load, change brands of gasoline. If spark knock or pinging persists, see an authorized Honda servicing dealer.

NOTICE

Running the engine with persistent spark knock or pinging can cause engine damage.

Running the engine with persistent spark knock or pinging is misuse, and the *Distributor's Limited Warranty* does not cover parts damaged by misuse.

ENGINE OIL LEVEL CHECK

Check the engine oil level with the engine stopped and in a level position.

1. Remove the oil filler cap/dipstick and wipe it clean.

2. Insert and remove the dipstick without screwing it into the filler neck. Check the oil level shown on the dipstick.

3. If the oil level is low, fill to the edge of the oil filler hole with the recommended oil (see page 31).

4. Screw in the oil filler cap/dipstick securely.

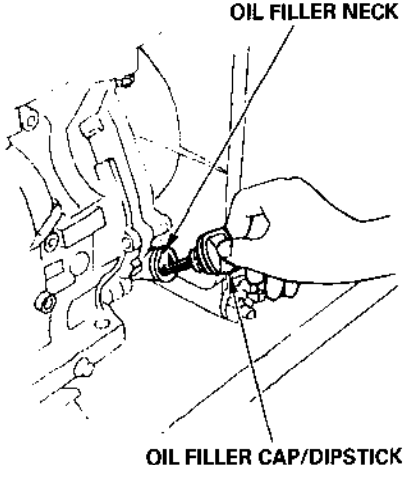

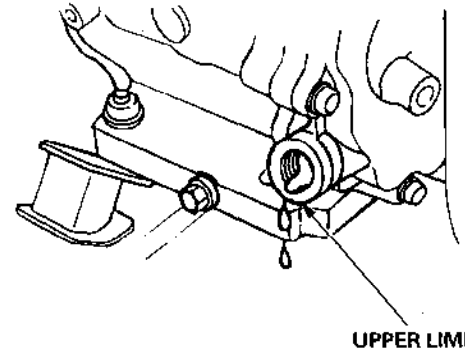

The Oil Alert® system will automatically stop the engine before the oil level falls below safe limits. However, to avoid the inconvenience of an unexpected shutdown, check the oil level regularly.

ENGINE OIL CHANGE

Drain the used oil while the engine is warm. Warm oil drains quickly and completely.

1. Place a suitable container below the engine to catch the used oil, then remove the oil filler cap/dipstick and the drain plug.

2. Allow the used oil to drain completely, then reinstall the drain plug, and tighten it securely.

   Please dispose of used motor oil in a manner that is compatible with the environment. We suggest you take used oil in a sealed container to your local recycling center or service station for reclamation. Do not throw it in the trash ,pour it on the ground, or down a drain.

3. With the engine in a level position, fill to the outer edge of the oil filler hole with the recommended oil (see page 31).

   Engine oil capacity:WT20X..... 0.63 US qt (0.60 ℓ , 0.53 Imp qt)
   WT30X/WT40X.. 1.2 US qt (1.1 ℓ , 1.0 Imp qt)

   The Oil Alert® system will automatically stop the engine before the oil level falls below the safe limit. However, to avoid the inconvenience of an unexpected shutdown, fill to the upper limit, and check the oil level regularly.

4. Screw in the oil filler cap/dipstick securely.

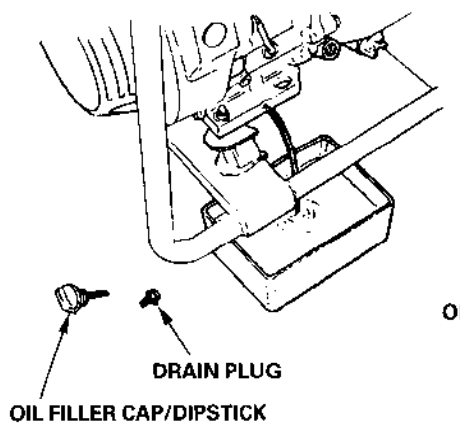

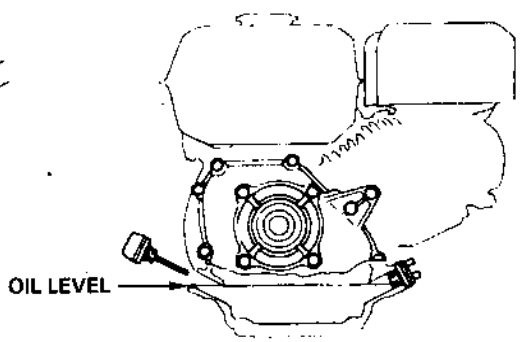

ENGINE OIL RECOMMENDATIONS

Oil is a major factor affecting performance and service life. Use 4-stroke automotive detergent oil.

SAE 10W-30 is recommended for general use. Other viscosities shown in the chart may be used when the average temperature in your area is within the recommended range.

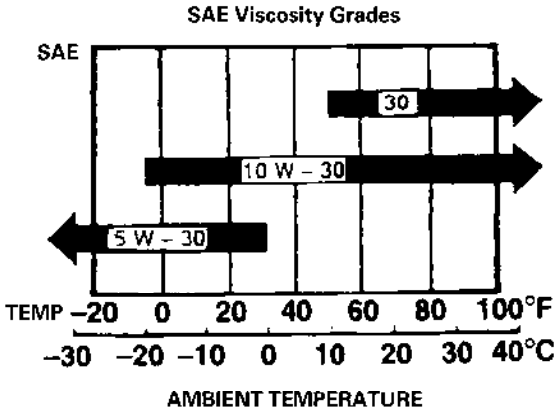

The SAE oil viscosity and service classification are in the API label on the oil container. Honda recommends that you use API SERVICE category SJ oil.

The recommended operating range of this pump is 23 °F to 104 °F (−5 °C to 40 °C).

AIR FILTER INSPECTION

1. Unscrew the wing nut and remove the air cleaner cover. Check the air filter to be sure it is clean and in good condition.

2. If the air filter is dirty, clean it as described on page 33. Replace the air filter if it is damaged.

3. Reinstall the air cleaner cover, and tighten the wing nut securely.

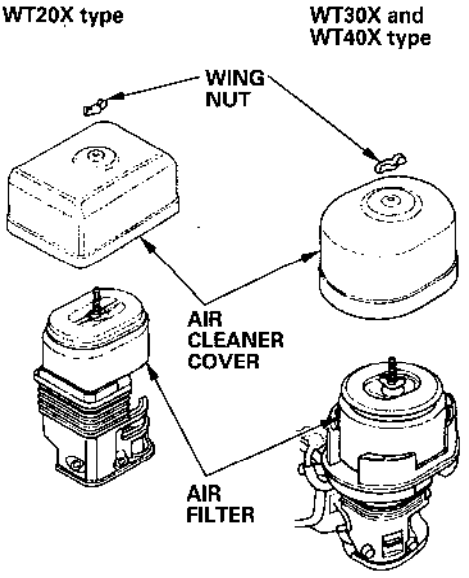

NOTICE

Operating the engine without an air filter, or with a damaged air filter, will allow dirt to enter the engine, causing rapid engine wear. This type of damage is not covered by the *Distributor's Limited Warranty.*

AIR FILTER CLEANING

A dirty air filter will restrict air flow to the carburetor, reducing engine performance. If you operate the pump in very dusty areas, clean the air filter more frequently than specified in the MAINTENANCE SCHEDULE (see page 26).

1. Unscrew the wing nut from the air cleaner cover, and remove the air cleaner cover.
2. Unscrew the wing nut from the air filter, and remove the air filter.
3. Separate the foam and paper air filter elements. Check both filter elements, and replace them if they are damaged. Always replace the paper air filter element every year or 300 hours. Clean the air filter elements if they are to be reused.
   Paper air filter element: Tap the filter element several times on a hard surface to remove dirt, or blow compressed air [not exceeding 30 psi (270 kPa, 2.1 kg/cm²)] through the filter element from the inside out. Never try to brush off dirt; brushing will force dirt into the fibers.

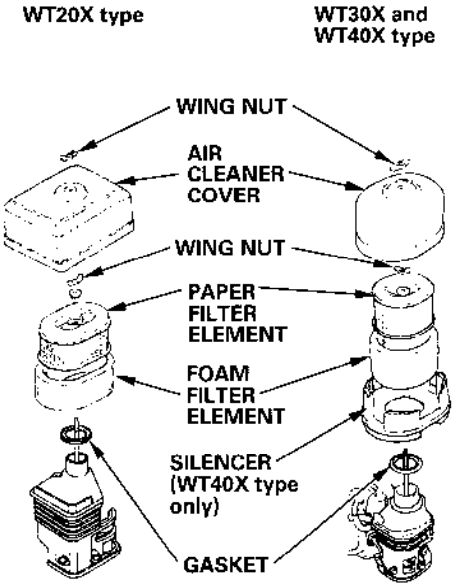

   Foam air filter element: Wash in warm, soapy water, then rinse thoroughly, or wash in nonflammable solvent. Allow the filter element to dry thoroughly. Dip the filter element in clean engine oil, then squeeze out all excess oil. The engine will smoke when started if too much oil is left in the filter element.
4. Wipe dirt from the air cleaner base and cover (and silencer if applicable), using a moist rag.
5. Place the foam air filter element over the paper air filter element, and install the assembled air filter. Be sure the gasket is in place beneath the filter. Tighten the wing nut securely.
6. Reinstall the air cleaner cover, and tighten the wing nut securely.

SEDIMENT CUP CLEANING

1. Move the fuel valve lever to the OFF position, then remove the fuel sediment cup and O-ring.

⚠ WARNING

Gasoline is highly flammable and explosive.

You can be burned or seriously injured when handling fuel.

- Stop the engine and keep heat, sparks, and flame away.
- Handle fuel only outdoors.
- Wipe up spills immediately.

2. Wash the sediment cup and O-ring in nonflammable solvent, and dry them thoroughly.

3. Place the O-ring in the fuel valve, and install the sediment cup. Tighten the sediment cup securely.

4. Move the fuel valve lever to the ON position, and check for leaks. Replace the O-ring if there is any leakage.

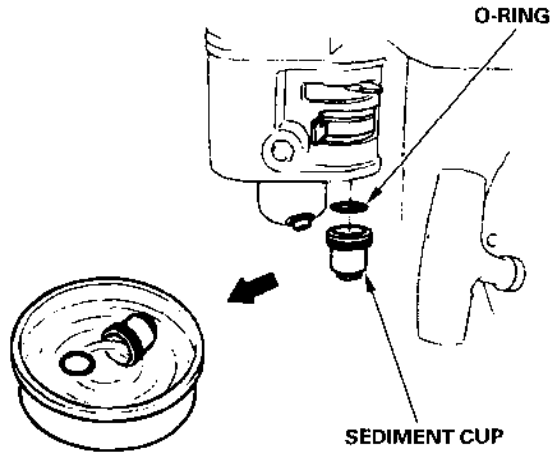

SPARK PLUG SERVICE

In order to service the spark plug, you will need a spark plug wrench (commercially available).

Recommended spark plug: BPR6ES (NGK)
W20EPR-U (DENSO)

NOTICE

Incorrect spark plugs can cause engine damage.

1. Disconnect the spark plug cap, and remove any dirt from around the spark plug area.

2. Remove the spark plug with a 13/16-inch spark plug wrench.

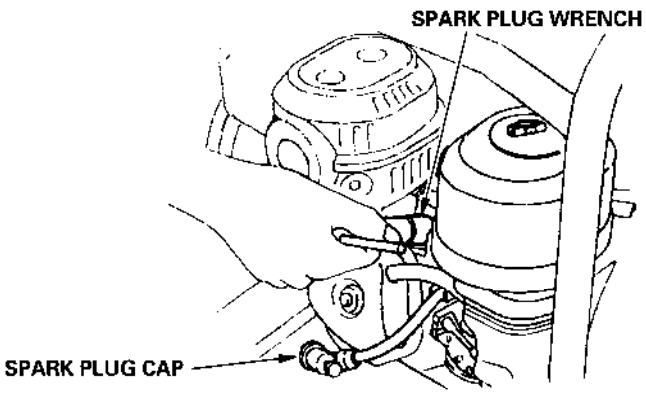

3. Inspect the spark plug. Replace it if the electrodes are worn, or if the insulator is cracked or chipped. Clean the spark plug with a wire brush if you are going to reuse it.

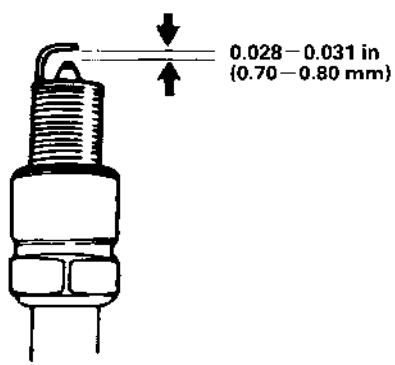

4. Measure the spark plug electrode gap with a suitable gauge.
Correct the gap, if necessary, by carefully bending the side electrode.
The gap should be:
0.028–0.031 in (0.70–0.80 mm)

5. Install the spark plug carefully, by hand, to avoid cross-threading.

6. After the spark plug seats, tighten with a 13/16-inch spark plug wrench to compress the washer.

   If reinstalling the used spark plug, tighten 1/8—1/4 turn after the spark plug seats.

   If installing a new spark plug, tighten 1/2 turn after the spark plug seats.

   NOTICE

   A loose spark plug can overheat and damage the engine.
   Overtightening the spark plug can damage the threads in the cylinder head.

7. Attach the spark plug cap.

IDLE SPEED ADJUSTMENT

1. Start the engine outdoors, and allow it to warm up to operating temperature.

NOTICE

Dry operation will damage the pump seal. Be sure the pump chamber is filled with water before starting the engine.

2. Move the throttle lever to its slowest position.

3. Turn the throttle stop screw to obtain the standard idle speed.

Standard idle speed: WT20X: 1,400 $^{+200}_{-150}$ rpm
WT30X/WT40X: 1,400 ± 150 rpm

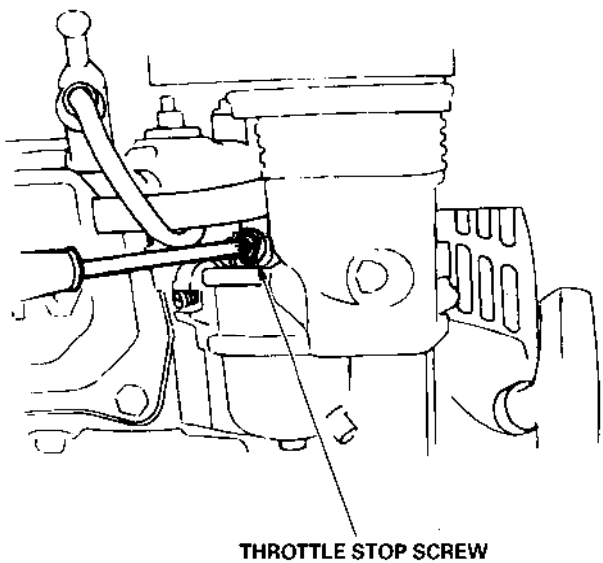

SPARK ARRESTER SERVICE (optional equipment)

Your engine is not factory-equipped with a spark arrester. In some areas, it is illegal to operate an engine without a spark arrester. Check local laws and regulations. A spark arrester is available from authorized Honda servicing dealers.

The spark arrester must be serviced every 100 hours to keep it functioning as designed.

If the engine has been running, the muffler will be very hot. Allow the muffler to cool before servicing the spark arrester.

1. Remove the 5 mm screws from the muffler protector, and remove the muffler protector.

2. Remove the 4 mm screw from the spark arrester, and remove the spark arrester from the muffler.

WT20X

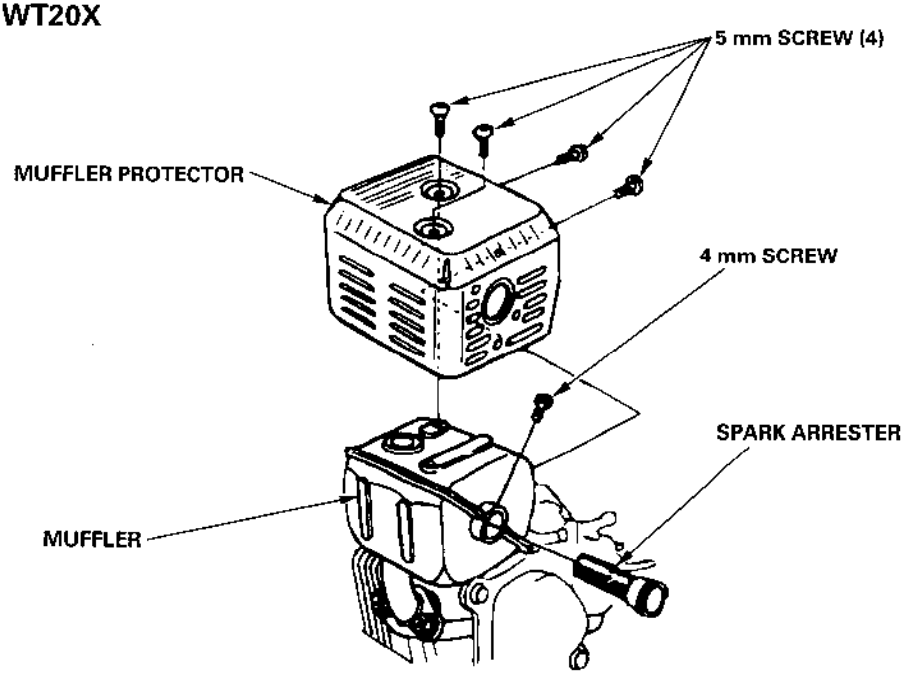

WT30X and WT40X

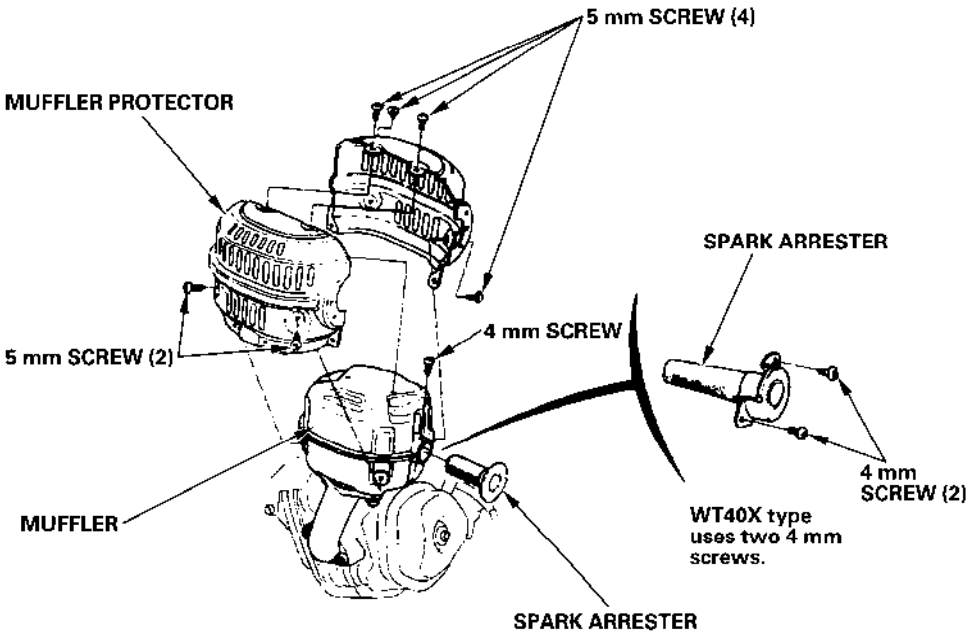

3. Use a brush to remove carbon deposits from the spark arrester screen. Be careful to avoid damaging the screen.

   The spark arrester must be free of breaks and holes. Replace the spark arrester if it is damaged.

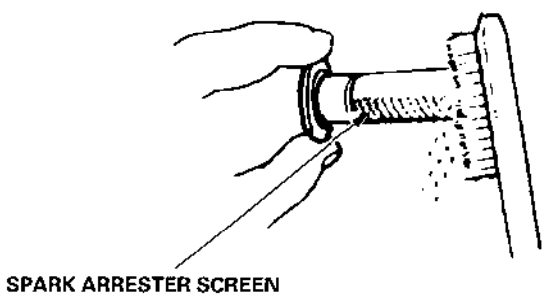

4. Install the spark arrester, muffler protector, and muffler in the reverse order of disassembly.

PUMP CASING CLEANING

After each use, clean the inside of the pump casing using the following procedure:

Removal:

1. Remove the drain plugs from the pump casing and pump cover to drain the water inside.

2. Loosen the pump cover knobs and open the pump cover holders.

3. Remove the pump cover and the volute case from the pump casing, and remove any debris from pump casing and volute case.

Installation:

1. Install the O-rings on the pump cover, taking care not to damage the O-rings.

2. Install the pump cover on the pump casing, close the cover holders, and tighten the knobs hand tight. Then, insert a screwdriver shaft in the groove in the knobs and finish tightening the knobs.

3. Install the two drain plugs in the pump cover and pump casing.

4. After tightening the pump cover knobs, check the pump cover and pump casing to ensure that there is no water leakage.

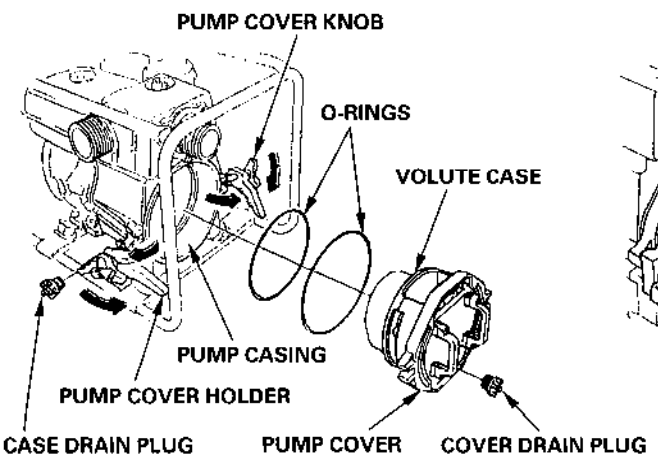

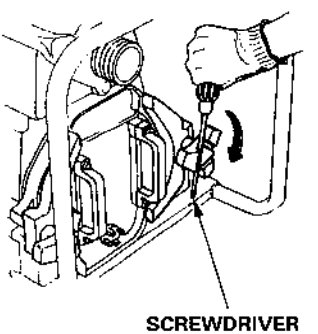

STORAGE

STORAGE PREPARATION

Proper storage preparation is essential for keeping your pump troublefree and looking good. The following steps will help to keep rust and corrosion from impairing your pump's function and appearance, and will make the engine easier to start when you use the pump again.

Cleaning

1. Wash the engine and pump.

   Wash the engine by hand, and be careful to prevent water from entering the air cleaner or muffler opening. Keep water away from controls and all other places that are difficult to dry, as water promotes rust.

   NOTICE

   - Using a garden hose or pressure washing equipment can force water into the air cleaner or muffler opening. Water in the air cleaner will soak the air filter, and water that passes through the air filter or muffler can enter the cylinder, causing damage.

   - Water contacting a hot engine can cause damage. If the engine has been running, allow it to cool for at least half an hour before washing.

2. Wipe dry all accessible surfaces.

3. Fill the pump chamber with clean, fresh water, start the engine outdoors, and let it run until it reaches normal operating temperature to evaporate any external water.

   NOTICE

   Dry operation will damage the pump seal. Be sure the pump chamber is filled with water before starting the engine.

4. Stop the engine, and allow it to cool.

5. Remove the case drain plug and cover drain plug, and flush the pump with clean, fresh water. Allow the water to drain from the pump chamber, then reinstall the drain plugs.

6. After the pump is clean and dry, touch up any damaged paint, and coat areas that may rust with a light film of oil. Lubricate controls with a silicone spray lubricant.

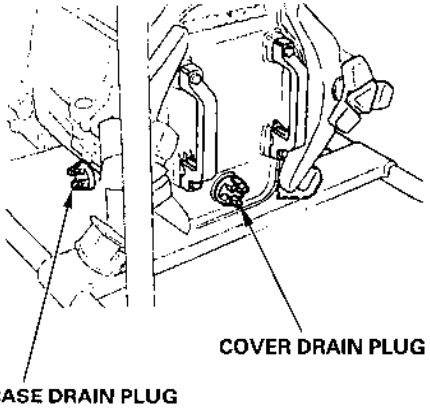

Fuel

Gasoline will oxidize and deteriorate in storage. Old gasoline will cause hard starting, and it leaves gum deposits that clog the fuel system. If the gasoline in your engine deteriorates during storage, you may need to have the carburetor and other fuel system components serviced or replaced.

The length of time that gasoline can be left in your fuel tank and carburetor without causing functional problems will vary with such factors as gasoline blend, your storage temperatures, and whether the fuel tank is partially or completely filled. The air in a partially filled fuel tank promotes fuel deterioration. Very warm storage/temperatures accelerate fuel deterioration. Fuel deterioration problems may occur within a few months, or even less if the gasoline was not fresh when you filled the fuel tank.

The *Distributor's Limited Warranty* does not cover fuel system damage or engine performance problems resulting from neglected storage preparation.

You can extend fuel storage life by adding a fuel stabilizer that is formulated for that purpose, or you can avoid fuel deterioration problems by draining the fuel tank and carburetor.

Adding a Fuel Stabilizer to Extend Fuel Storage Life

When adding a fuel stabilizer, fill the fuel tank with fresh gasoline. If only partially filled, air in the tank will promote fuel deterioration during storage. If you keep a container of gasoline for refueling, be sure that it contains only fresh gasoline.

1. Add fuel stabilizer following the manufacturer's instructions.

2. After adding a fuel stabilizer, run the engine outdoors for 10 minutes to be sure that treated gasoline has replaced the untreated gasoline in the carburetor.

NOTICE

Dry operation will damage the pump seal. Be sure the pump chamber is filled with water before starting the engine.

3. Stop the engine, and move the fuel valve lever to the OFF position.

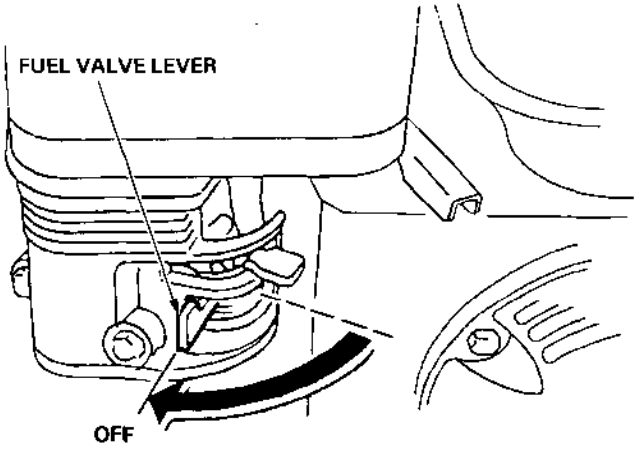

Draining the Fuel Tank and Carburetor

1. Place an approved gasoline container below the carburetor, and use a funnel to avoid spilling fuel.

2. Remove the carburetor drain bolt and sediment cup, then move the fuel valve lever to the ON position.

⚠ WARNING

Gasoline is highly flammable and explosive.

You can be burned or seriously injured when handling fuel.

- Keep heat, sparks, and flame away.
- Handle fuel only outdoors.
- Wipe up spills immediately.

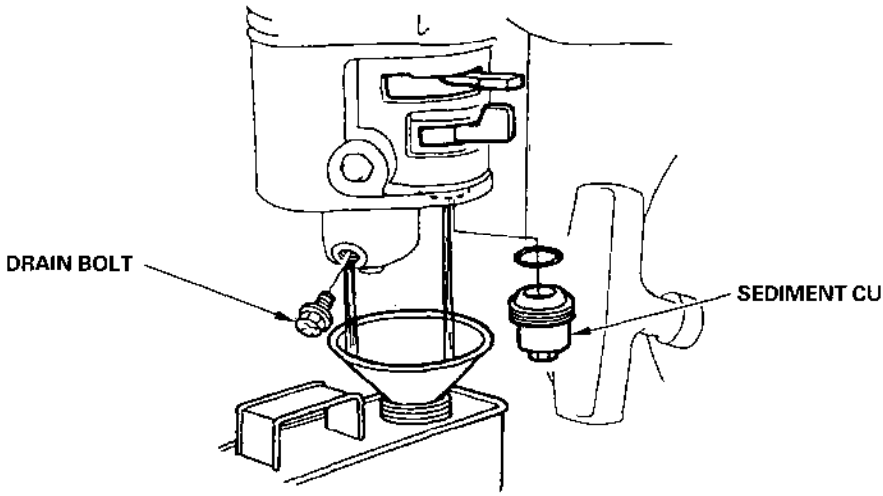

3. After all the fuel has drained into the container, reinstall the drain bolt and sediment cup. Tighten them securely.

Engine Oil

1. Change the engine oil (see page 30).

2. Remove the spark plug (see page 35).

3. Pour a tablespoon (5 — 10 cc) of clean engine oil into the cylinder.

4. Pull the starter grip several times to distribute the oil in the cylinder.

5. Reinstall the spark plug.

6. Pull the starter grip slowly until resistance is felt and the notch on the starter pulley aligns with the hole at the top of the recoil starter cover. This will close the valves so moisture cannot enter the engine cylinder. Return the starter grip gently.

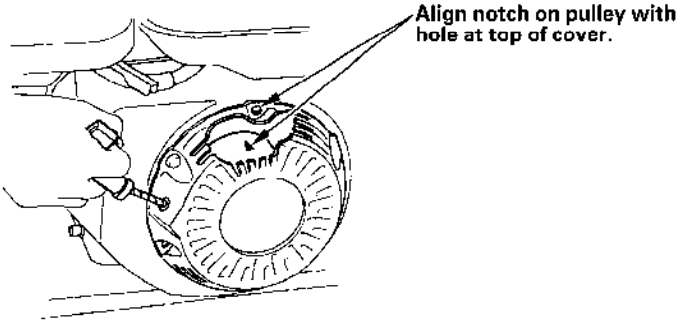

STORAGE PRECAUTIONS

If your pump will be stored with gasoline in the fuel tank and carburetor, it is important to reduce the hazard of gasoline vapor ignition. Select a well-ventilated storage area away from any appliance that operates with a flame, such as a furnace, water heater, or clothes dryer. Also avoid any area with a spark-producing electric motor, or where power tools are operated.

If possible, avoid storage areas with high humidity, because that promotes rust and corrosion.

Unless all fuel has been drained from the fuel tank, leave the fuel valve lever in the OFF position to reduce the possibility of fuel leakage.

STORAGE

Place the pump on a level surface. Tilting can cause fuel or oil leakage.

With the engine and exhaust system cool, cover the pump to keep out dust. A hot engine and exhaust system can ignite or melt some materials. Do not use sheet plastic as a dust cover. A nonporous cover will trap moisture around the pump, promoting rust and corrosion.

REMOVAL FROM STORAGE

Check your pump as described in the *BEFORE OPERATION* chapter of this manual.

If the fuel was drained during storage preparation, fill the tank with fresh gasoline. If you keep a container of gasoline for refueling, be sure that it contains only fresh gasoline. Gasoline oxidizes and deteriorates over time, causing hard starting.

If the cylinder was coated with oil during storage preparation, the engine may smoke briefly at startup. This is normal.

TRANSPORTING

If the pump has been running, allow the engine to cool for at least 15 minutes before loading the pump on the transport vehicle. A hot engine and exhaust system can burn you and can ignite some materials.

Keep the pump level when transporting to reduce the possibility of fuel leakage. Move the fuel valve lever to the OFF position.

TAKING CARE OF UNEXPECTED PROBLEMS

ENGINE

Engine Will Not Start	Possible Cause	Correction
1. Check control positions.	Fuel valve OFF.	Move fuel valve lever to ON position.
	Choke open.	Move choke lever to CLOSED position unless engine is warm.
	Ignition switch OFF.	Turn ignition switch to ON.
2. Check fuel.	Out of fuel.	Refuel (p. 27)
	Bad fuel; pump stored without treating or draining gasoline, or refuel with bad gasoline.	Drain fuel tank and carburetor (p. 44). Refuel with fresh gasoline (p. 27).
3. Check engine oil level.	Low oil level caused Oil Alert® to stop engine.	Add oil (p. 29).
4. Remove and inspect spark plug.	Spark plug faulty, fouled, or improperly gapped.	Clean, gap, or replace spark plug (p. 35).
	Spark plug wet with fuel (flooded engine).	Dry and reinstall spark plug. Start engine with throttle lever in FAST position.
5. Take engine to an authorized Honda servicing dealer, or refer to shop manual.	Fuel filter clogged, carburetor malfunction, ignition malfunction, valves stuck, etc.	Replace or repair faulty components as necessary.

Engine Lacks Power	Possible Cause	Correction
1. Check air filter.	Air filter clogged.	Clean or replace filter (p. 33).
2. Check fuel.	Bad fuel; pump stored without treating or draining gasoline, or refuel with bad gasoline.	Drain fuel tank and carburetor (p. 44). Refuel with fresh gasoline (p. 27).
3. Take engine to an authorized Honda servicing dealer, or refer to shop manual.	Fuel filter clogged, carburetor malfunction, ignition malfunction, valves stuck, etc.	Replace or repair faulty components as necessary.

PUMP

No Pump Output	Possible Cause	Correction
1. Check pump chamber.	Pump not primed.	Prime pump (p. 18)
2. Check suction hose.	Hose collapsed, cut or punctured.	Replace suction hose (p. 17).
	Strainer not completely underwater.	Sink the strainer and the end of a suction hose completely underwater.
	Air leak at connector.	Replace sealing washer if missing or damaged. Tighten hose connector and clamp (p. 17).
	Strainer clogged.	Clean debris from strainer.
3. Measure suction and discharge head.	Excessive head.	Relocate pump and/or hoses to reduce head (p. 16, 57, 59, 61).
4. Check engine.	Engine lacks power.	See page 48 .

Low Pump Output	Possible Cause	Correction
1. Check suction hose.	Hose collapsed, damaged, too long, or diameter too small.	Replace suction hose (p. 17).
	Air leak at connector.	Replace sealing washer if missing or damaged. Tighten hose connector and clamp (p. 17).
	Strainer clogged.	Clean debris from strainer.
2. Check discharge hose.	Hose damaged, too long, or diameter too small.	Replace discharge hose (p. 18).
3. Measure suction and discharge head.	Marginal head.	Relocate pump and/or hoses to reduce head (p. 16, 57, 59 , 61).
4. Check engine.	Engine lacks power.	See page 48 .

TECHNICAL & CONSUMER INFORMATION

TECHNICAL INFORMATION

Serial Number Location

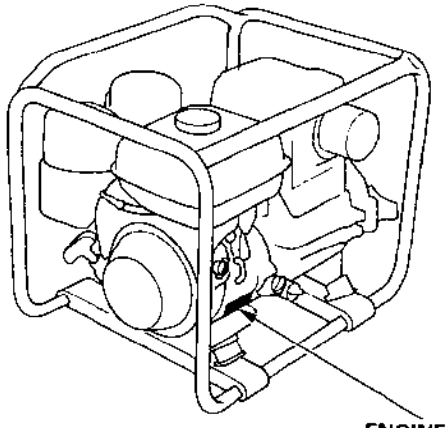

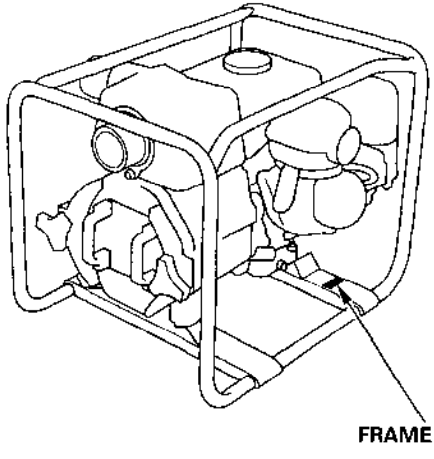

Record the frame serial number and the engine serial number in the space below. You will need these serial numbers when ordering parts, and when making technical or warranty inquiries (see page 63).

Engine serial number: _____

Frame serial number: _____

Carburetor Modification for High Altitude Operation

At high altitude, the standard carburetor air-fuel mixture will be too rich. Performance will decrease, and fuel consumption will increase. A very rich mixture will also foul the spark plug and cause hard starting.

High altitude performance can be improved by specific modifications to the carburetor. If you always operate your pump at altitudes above 5,000 feet (1,500 meters), have your servicing dealer perform this carburetor modification.

Even with carburetor modification, engine horsepower will decrease about 3.5% for each 1,000-foot (300-meter) increase in altitude. The effect of altitude on horsepower will be greater than this if no carburetor modification is made.

NOTICE

When the carburetor has been modified for high altitude operation, the air-fuel mixture will be too lean for low altitude use. Operation at altitudes below 5,000 feet (1,500 meters) with a modified carburetor may cause the engine to overheat and result in serious engine damage. For use at low altitudes, have your servicing dealer return the carburetor to original factory specifications.

Oxygenated Fuels

Some conventional gasolines are being blended with alcohol or an ether compound. These gasolines are collectively referred to as oxygenated fuels. To meet clean air standards, some areas of the United States and Canada use oxygenated fuels to help reduce emissions.

If you use an oxygenated fuel, be sure it is unleaded and meets the minimum octane rating requirement.

Before using an oxygenated fuel, try to confirm the fuel's contents. Some states/provinces require this information to be posted on the pump.

The following are the EPA-approved percentages of oxygenates:

ETHANOL —(ethyl or grain alcohol) 10% by volume
You may use gasoline containing up to 10% ethanol by volume. Gasoline containing ethanol may be marketed under the name "Gasohol".

MTBE —(methyl tertiary butyl ether) 15% by volume
You may use gasoline containing up to 15% MTBE by volume.

METHANOL —(methyl or wood alcohol) 5% by volume
You may use gasoline containing up to 5% methanol by volume as long as it also contains cosolvents and corrosion inhibitors to protect the fuel system. Gasoline containing more than 5% methanol by volume may cause starting and/or performance problems. It may also damage metal, rubber, and plastic parts of your fuel system.

If you notice any undesirable operating symptoms, try another service station, or switch to another brand of gasoline.

Fuel system damage or performance problems resulting from the use of an oxygenated fuel containing more than the percentages of oxygenates mentioned above are not covered under warranty.

Emission Control System Information

Source of Emissions

The combustion process produces carbon monoxide, oxides of nitrogen, and hydrocarbons. Control of hydrocarbons and oxides of nitrogen is very important because, under certain conditions, they react to form photochemical smog when subjected to sunlight. Carbon monoxide does not react in the same way, but it is toxic.

Honda utilizes lean carburetor settings and other systems to reduce the emissions of carbon monoxide, oxides of nitrogen, and hydrocarbons.

The U.S. and California Clean Air Acts

EPA and California regulations require all manufacturers to furnish written instructions describing the operation and maintenance of emission control systems.

The following instructions and procedures must be followed in order to keep the emissions from your Honda engine within the emission standards.

Tampering and Altering

Tampering with or altering the emission control system may increase emissions beyond the legal limit. Among those acts that constitute tampering are:

- Removal or alteration of any part of the intake, fuel, or exhaust systems.
- Altering or defeating the governor linkage or speed-adjusting mechanism to cause the engine to operate outside its design parameters.

Problems That May Affect Emissions

If you are aware of any of the following symptoms, have your engine inspected and repaired by your servicing dealer.

- Hard starting or stalling after starting.
- Rough idle.
- Misfiring or backfiring under load.
- Afterburning (backfiring).
- Black exhaust smoke or high fuel consumption.

Replacement Parts

The emission control systems on your Honda engine were designed, built, and certified to conform with EPA and California emission regulations. We recommend the use of genuine Honda parts whenever you have maintenance done. These original-design replacement parts are manufactured to the same standards as the original parts, so you can be confident of their performance. The use of replacement parts that are not of the original design and quality may impair the effectiveness of your emission control system.

A manufacturer of an aftermarket part assumes the responsibility that the part will not adversely affect emission performance. The manufacturer or rebuilder of the part must certify that use of the part will not result in a failure of the engine to comply with emission regulations.

Maintenance

Follow the maintenance schedule on page 26 . Remember that this schedule is based on the assumption that your machine will be used for its designed purpose. Sustained high-load or high-temperature operation, or use in unusually wet or dusty conditions, will require more frequent service.

Air Index

An Air Index Information hang tag/label was applied to this engine in accordance with the requirements of the California Air Resources Board.

The bar graph is intended to provide you, our customer, the ability to compare the emissions performance of available engines. The lower the Air Index, the less pollution.

The durability description is intended to provide you with information relating to the engine's emission durability period. The descriptive term indicates the useful-life period for the engine's emission control system. See your *Emission Control Warranty* for additional information.

Descriptive Term	Applicable to Emissions Durability Period
Moderate	50 hours (0 – 65 cc) 125 hours (greater than 65 cc)
Intermediate	125 hours (0 – 65 cc) 250 hours (greater than 65 cc)
Extended	300 hours (0 – 65 cc) 500 hours (greater than 65 cc)

The Air Index Information hang tag must remain on the pump until it is sold. Remove the hang tag before operating the pump.

Specifications

WT20X

Dimensions and weight

Length	24.4 in (620 mm)
Width	17.1 in (435 mm)
Height	15.9 in (405 mm)
Dry weight	84 lbs (38 kg)

Engine design and performance

Model	GX160K1
Engine type	4-stroke, overhead valve, single cylinder
Displacement [bore × stroke]	9.9 cu-in (163 cm^3) [2.7 × 1.8 in (68 × 45 mm)]
Maximum output	5.5 PS (4.0 kW) at 4,000 rpm
Maximum torque	8.0 lbf·ft (11 N·m, 1.1 kgf·m) at 2,500 rpm
Cooling system	Forced air
Ignition system	Transistorized magneto
PTO shaft rotation	Counterclockwise

Tuneup

Spark plug gap	0.028 – 0.031 in (0.70 – 0.80 mm)	See page 35.
Idle speed	1,400 $^{+200}_{-150}$ rpm	See page 37.
Valve clearance (cold)	Intake: 0.15 ± 0.02 mm Exhaust: 0.20 ± 0.02 mm	See shop manual.
Other specifications	No other adjustments needed.	

WT20X (continued)

Pump

Suction port diameter	2.0 in (50 mm)
Discharge port diameter	2.0 in (50 mm)
Total head (maximum)	85.3 ft (26 m)
Suction head (maximum)	26.2 ft (8 m)
Discharge capacity (maximum)	171.7 US gal (650 ℓ , 143.0 Imp gal) per minute
Self-priming time	50 seconds at 16.4 ft (5 m)
Continuous running time	Approximately 2-1/2 hours (actual time varies with pump load)

Pump performance curve

As total head increases, discharge capacity decreases. The following graph shows the relationship between pump discharge capacity and total head, while pumping clear water at sea level.

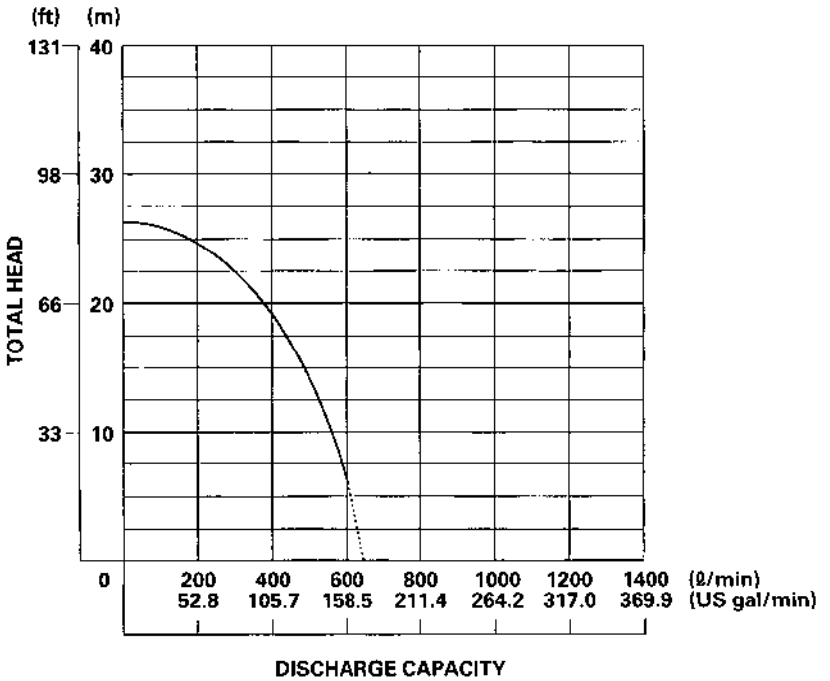

WT30X

Dimensions and weight

Length	26.0 in (660 mm)
Width	19.1 in (485 mm)
Height	20.1 in (510 mm)
Dry weight	128 lbs (58 kg)

Engine design and performance

Model	GX240K1
Engine type	4-stroke, overhead valve, single cylinder
Displacement [bore × stroke]	14.8 cu-in (242 cm^3) [2.9 × 2.3 in (73 × 58 mm)]
Maximum output	8 PS (5.9 kW) at 3,600 rpm
Maximum torque	12.3 lbf·ft (16.7 N·m, 1.7 kgf·m) at 2,500 rpm
Cooling system	Forced air
Ignition system	Transistorized magneto
PTO shaft rotation	Counterclockwise

Tuneup

Spark plug gap	0.028 – 0.031 in (0.70 – 0.80 mm)	See page 35.
Idle speed	1,400 ± 150 rpm	See page 37.
Valve clearance (cold)	Intake: 0.15 ± 0.02 mm Exhaust: 0.20 ± 0.02 mm	See shop manual.
Other specifications	No other adjustments needed.	

WT30X (continued)

Pump

Suction port diameter	3.1 in (80 mm)
Discharge port diameter	3.1 in (80 mm)
Total head (maximum)	98.4 ft (30 m)
Suction head (maximum)	26.2 ft (8 m)
Discharge capacity (maximum)	343.5 US gal (1,300 ℓ , 286.0 Imp gal) per minute
Self-priming time	50 seconds at 16.4 ft (5 m)
Continuous running time	Approximately 2-1/2 hours (actual time varies with pump load)

Pump performance curve

As total head increases, discharge capacity decreases. The following graph shows the relationship between pump discharge capacity and total head, while pumping clear water at sea level.

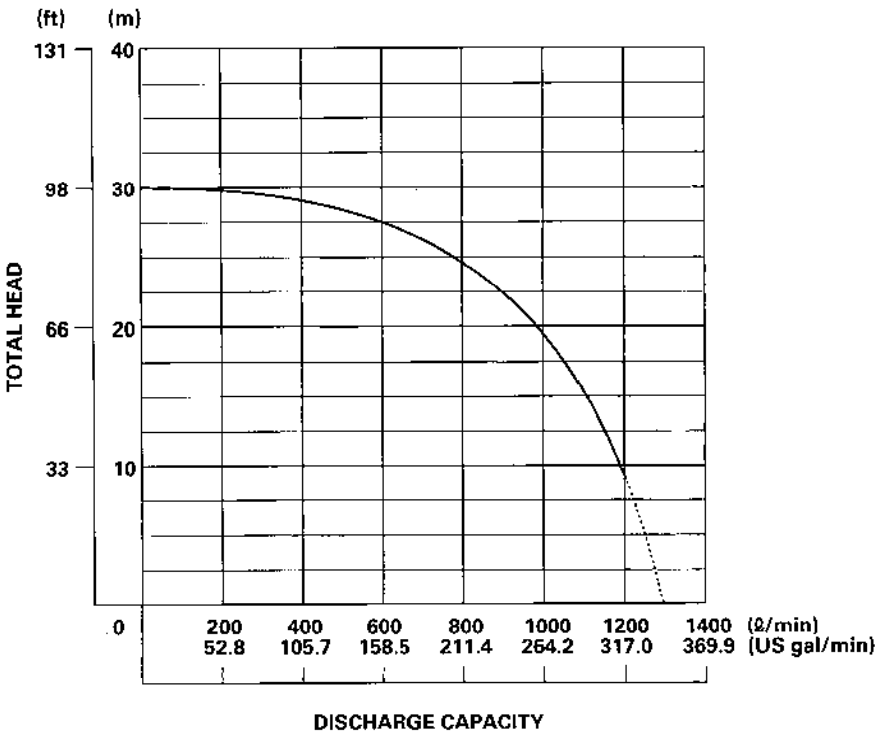

WT40X

Dimensions and weight

Length	28.1 in (715 mm)
Width	19.1 in (485 mm)
Height	22.0 in (560 mm)
Dry weight	150 lbs (68 kg)

Engine design and performance

Model	GX340K1
Engine type	4-stroke, overhead valve, single cylinder
Displacement [bore × stroke]	20.6 cu-in (338 cm^3) [3.2 × 2.5 in (82 × 64 mm)]
Maximum output	11 PS (8.1 kW) at 3,600 rpm
Maximum torque	17.4 lbf·ft (24 N·m, 2.4 kgf·m) at 2,500 rpm
Cooling system	Forced air
Ignition system	Transistorized magneto
PTO shaft rotation	Counterclockwise

Tuneup

Spark plug gap	0.028 – 0.031 in (0.70 – 0.80 mm)	See page 35.
Idle speed	1,400 ± 150 rpm	See page 37.
Valve clearance (cold)	Intake: 0.15 ± 0.02 mm Exhaust: 0.20 ± 0.02 mm	See shop manual.
Other specifications	No other adjustments needed.	

WT40X (continued)

Pump

Suction port diameter	3.9 in (100 mm)
Discharge port diameter	3.9 in (100 mm)
Total head (maximum)	95.1 ft (29 m)
Suction head (maximum)	26.2 ft (8 m)
Discharge capacity (maximum)	607.7 US gal (2,300 ℓ , 506.0 Imp gal) per minute
Self-priming time	50 seconds at 16.4 ft (5 m)
Continuous running time	Approximately 2-1/2 hours (actual time varies with pump load)

Pump performance curve

As total head increases, discharge capacity decreases. The following graph shows the relationship between pump discharge capacity and total head, while pumping clear water at sea level.

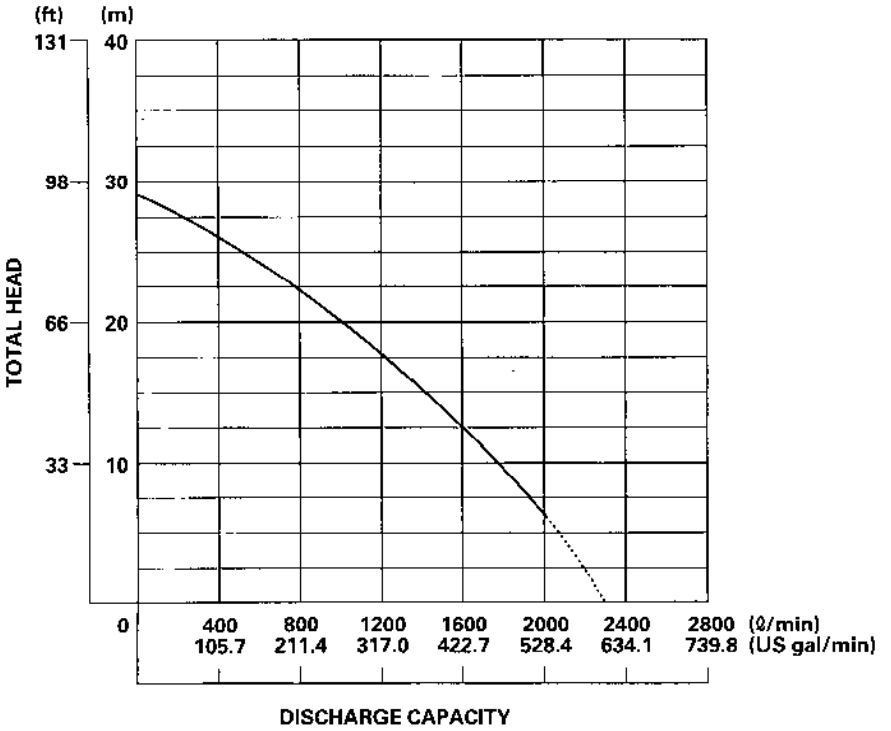

CONSUMER INFORMATION

Honda Publications

These publications will give you additional information for maintaining and repairing your pump. You may order them from your Honda pump dealer.

Shop Manual

This manual covers complete maintenance and overhaul procedures. It is intended to be used by a skilled technician.

Parts Catalog

This manual provides complete, illustrated parts lists.

Warranty Service Information

Servicing dealership personnel are trained professionals. They should be able to answer any question you may have. If you encounter a problem that your dealer does not solve to your satisfaction, please discuss it with the dealership's management. The Service Manager or General Manager can help. Almost all problems are solved in this way.

If you are dissatisfied with the decision made by the dealership's management, contact the Honda Power Equipment Customer Relations Office. You can write:

American Honda Motor Co., Inc.
Power Equipment Division
Customer Relations Office
4900 Marconi Drive
Alpharetta, Georgia 30005-8847

Or telephone: (770)497-6400

When you write or call, please give us this information:

- Model and serial number (see page 50)
- Name of the dealer who sold the pump to you
- Name and address of the dealer who services your pump
- Date of purchase
- Your name, address, and telephone number
- A detailed description of the problem

MEMO

QUICK REFERENCE INFORMATION

Fuel	Type	Unleaded gasoline with a pump octane rating of 86 or higher (page 28)
	Capacity	WT20X: 0.95 US gal (3.6 ℓ , 0.79 Imp gal) WT30X: 1.59 US gal (6.0 ℓ , 1.32 Imp gal) WT40X: 1.72 US gal (6.5 ℓ , 1.43 Imp gal)
Engine Oil	Type	SAE 10W-30, API SJ, for general use (page 31)
	Capacity	WT20X: 0.63 US qt (0.60 ℓ , 0.53 Imp qt) WT30X/WT40X: 1.2 US qt (1.1 ℓ , 1.0 Imp qt)
Spark Plug	Type	NGK: BPR6ES DENSO: W20EPR-U
	Gap	0.028−0.031 in (0.70−0.80 mm) (page 35)
Carburetor	Idle speed	WT20X: 1,400 $^{+200}_{-150}$ rpm WT30X/WT40X: 1,400 ± 150 rpm
Maintenance	Before each use	Check engine oil level. Check air filter.
	First 20 hours	Change engine oil.
	Subsequent	Refer to the maintenance schedule on page 26 .

HONDA

HONDA MOTOR CO., LTD. TOKYO, JAPAN

31YB8720
00X31-YB8-7200

K1:WT40X
K2:WT20X,WT30X

EM3 (英) (Y) (HC) 500.2000.07
PRINTED IN JAPAN

M