Canon

imageFORMULA
R30

User Manual

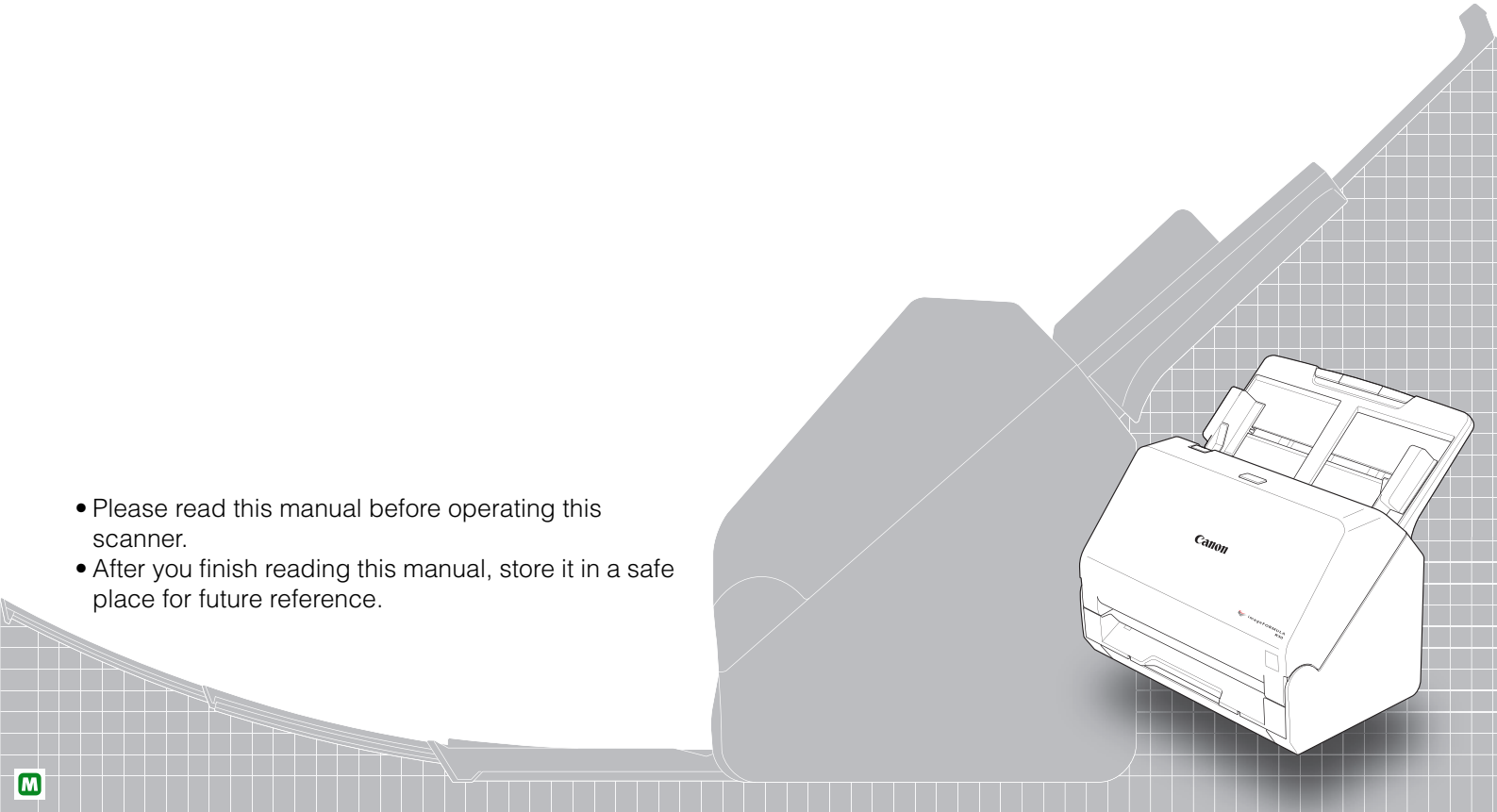

- Please read this manual before operating this scanner.
- After you finish reading this manual, store it in a safe place for future reference.

Contents

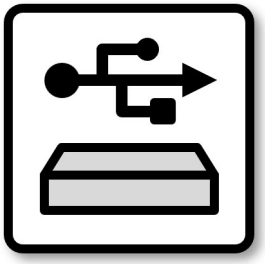

Before Using the Scanner

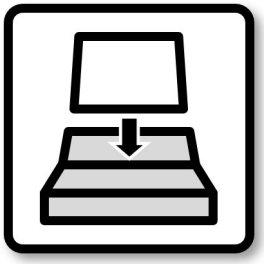

Basic Operation

Scanning methods

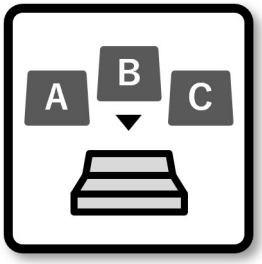

Settings According to Purpose

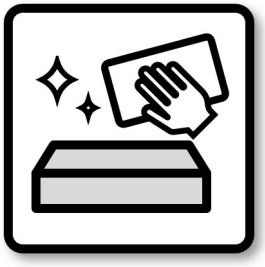

Daily Maintenance

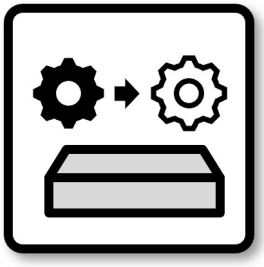

Replacing Consumable Parts

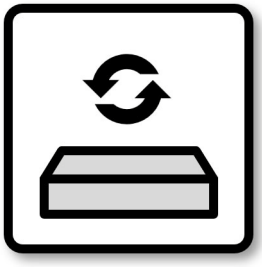

Updating Application

Troubleshooting

Frequently Asked Questions

■ Before Using

The scanner will not turn ON
→P. 61

The scanner is not recognized
→P. 61

Scanning application does not start
→P. 61

■ Feeding

Documents feed askew
→P. 61

Documents jam (or double-feed)
→P. 62

■ Scanning

Scanned image does not appear on the application
→P. 62

Pages are missing
→P. 62

Scanning is too slow
→P. 64

There is a display glitch on the UI screen
→P. 64

Memory becomes Insufficient
→P. 63

■ Scanned image

White lines or streaks appear
→P. 61

Scanned multiple pages cannot be saved to a single file
→P. 62

Scanned files cannot be opened in an application
→P. 64

■ Replacing Consumable Parts

Replacing the Feed Roller
→P. 56

Replacing the Retard Roller
→P. 56

Contents details

Contents 2
Frequently Asked Questions 3
Contents details 4
Introduction 5
Symbols Used in This Manual 5

Before Using the Scanner 6

System Requirements of Software 6
Important Safety Instructions 7
Installation Location 7
AC Adapter 7
Moving the Scanner 8
Handling 8
Disposal 9
When sending the scanner for repairs 9
Features of the Scanner 10
Names and Functions of Parts 11

Basic Operation 14

Power Supply 14
Turning the Power ON 14
Turning the Power OFF 15
Documents 16
How to Place Documents 18
Scanning multiple documents 18
Placing Cards 19
Detecting a document double feed 20

Scanning methods 22

Scanning with CaptureOnTouch Lite 22
What is CaptureOnTouch Lite? 22
Scanning Procedure 22
Starting and Exiting CaptureOnTouch Lite 27
Operations for the scanned image edit window 29
Setting the scan mode 32
Setting the output 35
Setting the Advanced Settings Dialog Box 37
Configuration and Functions of the Advanced Settings Dialog Box 37
Setting Basic Scanning Conditions 40
Function Restrictions Depending on Mode Setting 44
Configuring Scanner Settings According to Purpose 46

Maintenance 53

Daily Maintenance 53
Cleaning the Scanner 53
Cleaning the Inside of the Scanner 53
Cleaning the Sensor Glass and the Rollers 53
Replacing Consumable Parts 56
Removing the Document Feed Tray 60
Updating CaptureOnTouch Lite 60

Troubleshooting 61

Common Problems and Solutions 61
Software Troubleshooting 64
Useful tips 65
Clearing a Paper Jam 67

Appendix 69

Specifications 69
Replacement parts 70
Dimensions 70
Index 71
Regulations 72

Introduction

Thank you for purchasing the Canon imageFORMULA Document Scanner.
Please read the following manuals carefully and familiarize yourself with the functions of the scanner before use to ensure you sufficiently understand the functions and make the most of the scanner's capabilities. After reading the manuals, store them in a safe place for future reference.

Manuals for the Scanner

Documentation for this scanner consists of the following manuals.

- **Product Safety Guide**
  Before using the scanner, be sure to read and follow these instructions.
- **Setup Guide**
  This describes setup procedures for the scanner. Read this manual when you first use the scanner.
- **User Manual (this manual)**
  This manual contains complete explanations for operations on the scanner.
  It can be displayed by clicking the [manual] icon on the pop-up screen when the scanner is turned ON. For details, see p. 23.
  You can also see the user manual at the following website.
  https://software.canon-elec.co.jp/ims/r30/

Symbols Used in This Manual

The following symbols are used in this manual to explain procedures, restrictions, handling precautions, and instructions that should be observed for safety.

WARNING

Indicates a warning concerning operations that may lead to death or injury to persons if not performed correctly. To use the scanner safely, always pay attention to these warnings.

CAUTION

Indicates a caution concerning operations that may lead to injury to persons, or damage to property if not performed correctly. To use the scanner safely, always pay attention to these cautions.

IMPORTANT

Indicates operational requirements and restrictions. Be sure to read these items carefully to operate the scanner correctly, and avoid damaging the scanner.

Hint

Indicates a clarification of an operation, or contains additional explanations for a procedure. Reading these notes is highly recommended.

System Requirements of Software

To use the scanner, your computer must satisfy the following system requirements.

Computer

CPU:	Intel Core 2 Duo 1.66GHz or faster Windows Intel Core i7 2.3GHz or faster Mac
Memory:	1 GB or more Windows 8 GB or more Mac
Hard disk:	3 GB or more available space required for installation of all software
USB interface:	Hi-Speed USB2.0
Monitor:	Resolution of 1024 × 768 (XGA) or better recommended. Windows

Operating system

- Microsoft Windows 10 (32-bit and 64-bit editions)
- Microsoft Windows 11
- macOS 11
- macOS 12
- macOS 13

This is the environment as of February 2023.
For the latest software support information, go to the Products page on the Canon website.

IMPORTANT

- Use the USB interface provided as standard with your computer. However, normal operation is not guaranteed with all USB interfaces, even if present as standard equipment on the computer. For details, consult your local authorized Canon dealer.
- Scanning speeds are lower if your computer's standard USB interface is USB Full-Speed (equal to USB 1.1.)
- The USB cable you are using should be the one originally included with the scanner.
- If the CPU, memory, interface card, and other specifications do not satisfy the installation requirements, the scanning speed may be greatly reduced and transmission may take a long time.
- Even if the computer satisfies the system requirements, the scanning speed may vary, depending on the specification of the computer and the environment.
- In Windows 10 tablet mode, the software may disrupt the display.

Precautions for Use in 64-bit Operating Systems (Windows only)

Scanning speed may vary depending on the specifications of your computer.

Important Safety Instructions

To ensure the safe operation of this scanner, be sure to read the safety warnings and precautions described below.

Installation Location

The performance of this scanner is affected by the environment in which it is installed. Make sure that the location where the scanner is installed meets the following environmental requirements.

- Provide adequate space around the scanner for operation, maintenance, and ventilation.

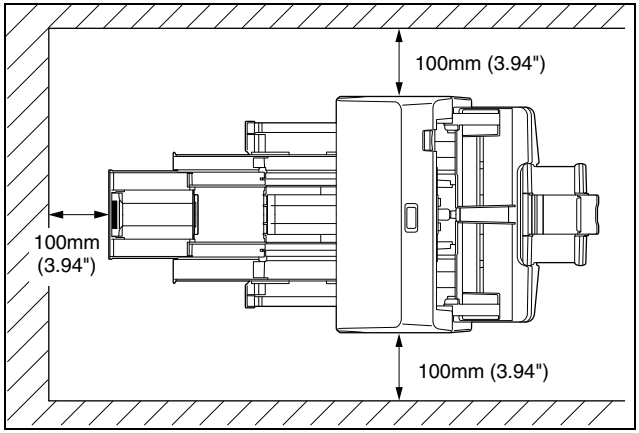

- Provide adequate space in front of the scanner for documents output after being scanned.
- Avoid installing the machine in direct sunlight. If this is unavoidable, use curtains to shade the scanner.
- Avoid locations where a considerable amount of dust accumulates as dust may adversely affect the inside of the scanner.
- Avoid warm or humid locations, such as in the vicinity of a water faucet, water heater, or humidifier. Avoid locations where ammonia gas is emitted. Avoid locations near volatile or flammable materials, such as alcohol or paint thinner.
- Avoid locations that are subject to vibration.
- Avoid exposing the scanner to rapid changes in temperature. If the room in which the scanner is installed is cold but rapidly heated, water droplets (condensation) may form inside the scanner. This may result in a noticeable degradation in scanning quality. The following conditions are recommended for optimal scanning quality:
  Room temperature: 10 °C to 32.5 °C (50 °F to 90.5 °F)
  Humidity: 20% to 80% RH
- Avoid installing the scanner near equipment that generates a magnetic field (e.g. speakers, televisions, or radios.)

AC Adapter

- Connect only to a power outlet of the rated voltage and power supply frequency (120 V, 60 Hz or 220-240 V, 50/60 Hz depending on your region).
- Do not connect other electrical equipment to the same power outlet to which the scanner is connected. Also, when using an extension cord, make sure that the extension cord is rated for the current requirements of the scanner.
- Never try to take the AC adapter apart or modify it in any way, as this is dangerous.
- The power cord may become damaged if it is often stepped on or if heavy objects are placed on it.
- Do not use the power cord while it is coiled.
- Do not pull directly on the power cord. When disconnecting the power cord, grasp the plug and remove it from the outlet.
- Keep the area around the power cord clear of objects so that the power cord can be disconnected easily in an emergency.
- Do not use an AC adapter other than the one provided with the scanner. Do not use the AC adapter provided with the scanner with other products.
- If you have any questions regarding the power supply, contact your local authorized Canon dealer or service representative for further information.

Moving the Scanner

- When moving the scanner, always hold it with both hands to avoid dropping it.
- Make sure to disconnect the interface cable and AC adapter before moving the scanner. If the scanner is transported with these items connected, the plugs and connectors may be damaged.

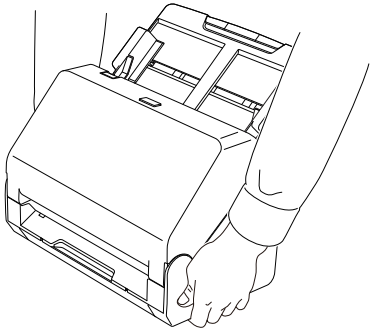

Handling

WARNING

Note the following precautions whenever using the scanner. Failure to do so may result in a fire or electric shock.

- Never use alcohol, benzene, paint thinner, aerosol sprays, or any other highly flammable substance near the scanner.
- Do not cut, damage, or modify the power cord. Do not place heavy objects on the power cord, and do not pull or excessively bend the power cord.
- Never connect the power cord when your hands are wet.
- Do not connect the scanner to a multi plug power strip.
- Do not knot or coil the power cord as this may result in a fire or electric shock. When connecting the power cord, make sure that the power plug is securely and completely inserted into the power outlet.
- The supplied power cord set is intended for use with this scanner only. Do not use it with other electronic equipment. In addition, do not use power cord sets other than the one supplied with the scanner. Doing so may result in fire or electric shock.
- Do not take the scanner apart or modify it.
- Never try to take the AC adapter apart or modify it in any way, as this is dangerous.
- Do not use flammable spray near the scanner.
- When cleaning the scanner, push the power button to turn it OFF and disconnect the power cord from the power supply.
- Clean the scanner using a slightly dampened cloth which has been well wrung out. Never use alcohol, benzene, paint thinner, or any other flammable substances.
- If the scanner makes strange noises, or gives off smoke, heat, or strange odors, or the scanner does not function or other abnormalities occur when you use the machine, immediately push the power button to turn it off, and disconnect the power plug from the power outlet. Then, contact your local authorized Canon dealer or service representative to have the unit serviced.
- Do not drop the scanner, or subject it to impact or strong shock. Should the scanner ever become damaged, immediately push the power button to turn it OFF, and disconnect the power plug from the power outlet. Then, contact your local authorized Canon dealer or service representative to have the unit serviced.
- Before moving the scanner, be sure to push the power button to turn it OFF, and disconnect the power plug from the power outlet

CAUTION

- Do not install the scanner on a surface that is unstable or tilted, or in an area subject to excessive vibrations, as this may cause the scanner to fall, resulting in personal injury or damage to the scanner.
- Never place small metal objects such as staples, paper clips, or jewelry on the scanner. These items may fall into the scanner, and cause a fire or electric shock. Should such objects ever fall inside the scanner, immediately push the power button to turn it OFF, and disconnect the power plug from the power outlet. Then, contact your local authorized Canon dealer or service representative to have the unit serviced.
- Do not install the scanner in a humid or dusty location. Doing so might cause a fire or electric shock.

- Do not place objects on top of the scanner. Such objects may tip or fall over, resulting in personal injury.
- Connect only to a power outlet of the rated voltage and power supply frequency (120 V, 60 Hz or 220-240 V, 50/60 Hz depending on your region). Doing so might cause a fire or electric shock.
- When unplugging the power cord, grasp it firmly by its plug. Do not pull directly on the power cord, as this may damage or expose the cord's internal wiring, resulting in a fire or electric shock.
- Leave sufficient space around the power plug so that it can be unplugged easily. If objects are placed around the power plug, you will be unable to unplug it in an emergency.
- Do not allow water or flammable substances (alcohol, paint thinner, benzene, etc.) to spill into the scanner, as this may result in a fire or electric shock. Doing so might cause a fire or electric shock.
- Push the power button to turn the scanner OFF for safety when not using the scanner for a long period of time, such as overnight. Also, push the power button to turn it OFF, and disconnect the power cord from the power outlet for safety when the machine will not be used for an extended period of time, such as during consecutive holidays.
- Do not wear loose clothing or jewelry that may get caught in the scanner while you are using it, as this may result in personal injury. Be extra careful of neckties and long hair. If anything becomes caught in the scanner, immediately disconnect the power cord to stop the scanner.
- Be careful when loading paper into the scanner and when removing jammed paper, as it is possible to cut your hand on the edge of a sheet of paper.

Disposal

When disposing of this scanner, be sure to follow all local ordinances and laws or consult with the retailer who sold you the scanner.

When sending the scanner for repairs

When a request is made for repairs, the scanner needs to be sent to the specified address. When sending the scanner, use the packing box in which it came. Firmly secure the scanner with packaging material when you place it in the packing box.

Features of the Scanner

The main features of the scanner are described below.

Ready to use right out of the box

Normally, scanners cannot scan documents without installing the driver and scanning application software into PC in advance. The application software “CaptureOnTouch Lite” is pre-installed on the R30, and you can scan documents only by connecting to PC via USB cable. This is Canon’s unique technology, and realizes shortest time needed to your 1st scan.

Simple, easy-to-use built-in software

You just select document type and output. CaptureOnTouch Lite achieves simple & intuitive operation.

Single pass double-sided scanning

The scanner can provide comfortable scanning environment due to single pass double-sided scanning function.

Card scan

You can scan business or ID cards.

Full Auto Mode

A Full Auto Mode is provided in CaptureOnTouch Lite to allow scanning under automatically determined conditions. Scanning conditions such as the color mode and page size are set automatically based on the document being scanned.

Auto Resolution Detection

When enabled in the CaptureOnTouch Lite settings, this function detects the content of documents and determines the scanning resolution automatically.

Deskew

The scanner is equipped with a deskew function that straightens images before saving them when documents are scanned askew. The scanned images are straightened, as opposed to the actual document sheets.

Support different type of document

The scanner can scan A4 document, legal, receipts, business cards, plastic or embossed cards, reports and more. Also the scanner automatically adjusts multiple feature settings to deliver optimal images.

Eco-friendly

Maximum power consumption is only 10W. Also, the scanner is designed to save energy by automatically entering the sleep mode if 10 minutes elapse without scanning or another operation being performed.

Names and Functions of Parts

Front View (With the Eject Tray Pushed In)

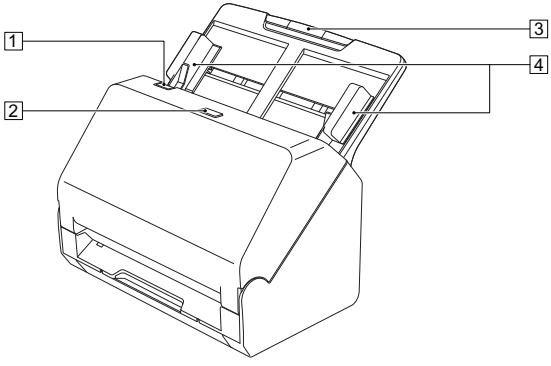

1 OPEN Lever

Pull this toward you to open the front unit.

2 Power button

Press this to turn on the scanner. When pressed, the power indicator is lit.
Press this button again to turn off the power.
The power button lights or flashes as follows depending on the scanner status.

Power Button Indication	Description
Lit	Power is on
Flashing (slowly)	Sleep mode
Flashing (quickly)	An error (paper jam, front unit is open, double feed, etc.) has occurred

3 Document Feed Tray

Place the document.

4 Document Guides

Align the document guides with both edges of the document to ensure that the document feeds straightly.

Front View (With the Eject Tray Pulled Out)

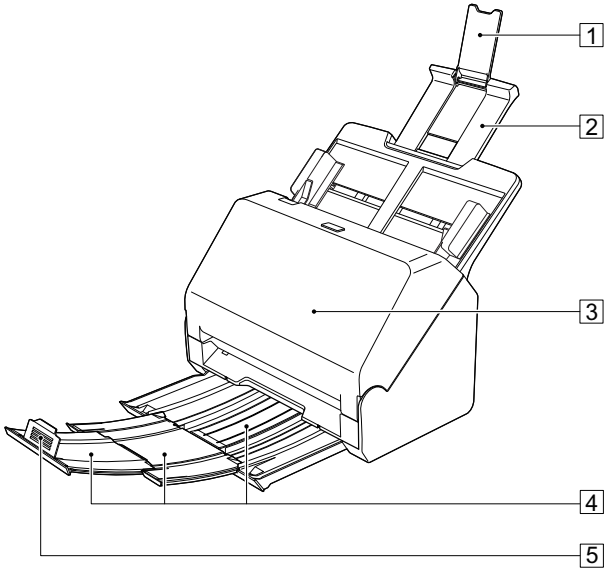

1 Feed Extension Support
Open this when placing long paper in the scanner.

2 Feed Support
Pull this out to support loaded documents.

3 Front Unit
Open this when cleaning the inside of the scanner or replacing rollers.

4 Document Eject Tray
Pull this out to scan documents. Scanned documents are output here.
When scanning multiple documents of varying sizes at one time, pulling out and lifting up this tray locks the angle of the tray, so the documents ejected onto the tray are aligned.

5 Document Eject Stopper
This prevents the document coming out of the document eject tray and aligns the leading edges of the ejected document. It can be moved to any position on the document eject tray to match the length of the document.

Back View

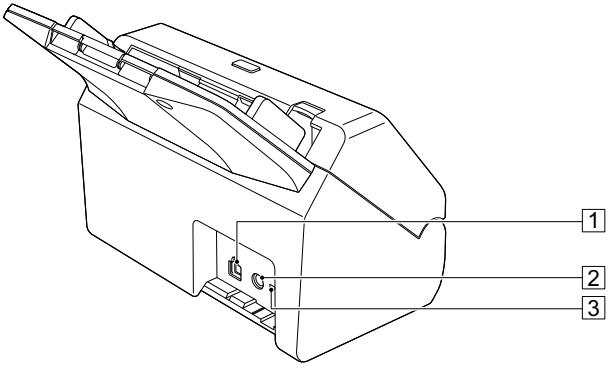

1 USB Connector

Connect the supplied USB cable to this connector.

2 Power Connector

Connect the supplied AC adapter to this connector.

3 Theft Prevention Hole (Security Slot)

Connect an anti-theft key chain or the like.

Power Supply

The power of the scanner can be turned ON and OFF with the power button on the front of the scanner.

Turning the Power ON

1 **Make sure that the scanner and computer are connected properly.**

2 **Press the power button.**

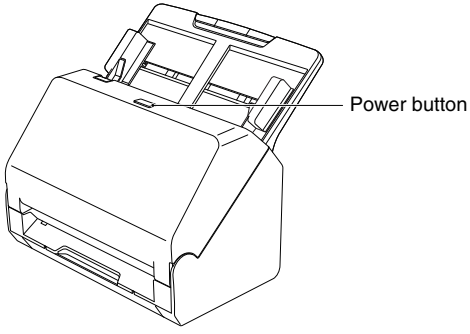

The power button lights blue when the power turns ON.

Hint

When the scanner is turned ON while the operating system of the computer is running, a screen for starting CaptureOnTouch Lite is displayed on the computer. For details on screen operations, see "Scanning with CaptureOnTouch Lite" on p. 22.

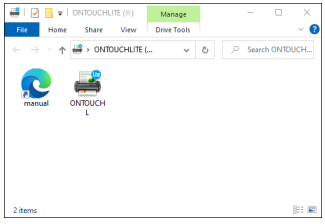

Windows

When the scanner is properly connected to the computer, the (CaptureOnTouch Lite) icon appears on the taskbar as follows.

If the taskbar icon appears as , the scanner is not properly connected to the computer. Check the status of the power button and USB cable.

Mac

When the scanner is properly connected to the computer, the (CaptureOnTouch Lite) icon appears on the taskbar as follows.

If the taskbar icon appears as , the scanner is not properly connected to the computer. Check the status of the power button and USB cable.

Turning the Power OFF

Press and hold the power button until the indicator goes out.

IMPORTANT

- After turning the scanner off, wait at least 10 seconds before turning it back on.
- If you will not be using the scanner for an extended period, you should disconnect the power cord from the AC outlet for safety.

Hint

The scanner's auto power off setting is enabled by default, and the scanner will turn off automatically if it is not operated for 4 hours.

Documents

The scanner can scan documents ranging in size from business cards to LTR/A4. The document sizes that this scanner can scan are shown below.

Plain Paper

Size

Width: 50.8 mm to 216 mm (2" to 8.5")

Length: 54 mm to 356 mm (2.1" to 14")

Paper thickness

27 to 209 g/m^2 (7 to 56 lb bond) 0.04 mm to 0.25 mm (0.00157" to 0.00984")

Loading capacity

A4 size or smaller: 60 sheets (80g/m^2 (22 lb bond))

Larger than A4 size: 40 sheets (80g/m^2 (22 lb bond))

Make sure stacks do not exceed 6 mm in height for either of the above.

IMPORTANT

The documents to be scanned must satisfy certain criteria. Read the following items carefully.

- When scanning multiple documents of different sizes, place the documents so that they cover the entire span of the feed rollers by aligning the centers and leading edges of the documents.

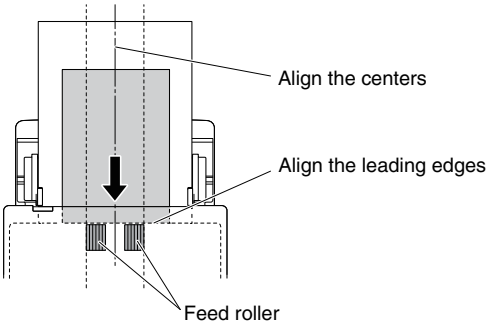

- It is recommended that documents exceeding 356 mm (14") size are fed one sheet at a time.
- Scanning documents before the ink is dry can cause problems with the scanner. Always make sure that the ink on a document is dry before scanning it.
- Scanning documents that are written in pencil or similar material may make the rollers and scanning glass dirty, which can lead to smudges on the scanned image and transfer the dirt to subsequent documents. Always clean the internal parts of the scanner after scanning such documents.
- When scanning a two-sided document that is printed on thin paper, the image on the opposite side of each page may show through. In this case, adjust the scanning intensity in the application software before scanning the document.
- Laminated documents may not be scanned correctly, depending on the document.
- Scanning the following types of documents can cause a paper jam or malfunction. To scan such a document, make a photocopy of the document and then scan the photocopy.

There are creases or fold lines.

There are curls.

There are tears.

There are clips or staples.

Carbon paper

The surface is coated.

Extremely thin document such as semi-transparent thin paper.

Documents with excessive paper dust particles.

Business Card

Size: 50 mm x 85 mm (1.97" x 3.35") or larger
Paper thickness: 255 g/m^2 (68 lb bond) 0.3 mm (0.0118") or smaller

IMPORTANT

If a stack of business cards cannot be fed properly, reduce the number of cards in the stack.

Card (plastic)

Size: 54 mm x 86 mm (2.12" x 3.37") (ISO standard)
Card thickness: 1.4 mm (0.055") or smaller
Orientation: Horizontal feeding only
Embossed cards can be scanned.
Loading capacity: 3 cards (non-embossed), 1 card (embossed)

CAUTION

- When scanning cards, place them to be fed horizontally. If you place cards to be fed vertically, they may not be ejected properly, and cards that get jammed may be damaged when you remove them.
- Embossed cards may not be able to be scanned correctly, depending on the type of embossment.

How to Place Documents

Scanning multiple documents

Standard paper feeding should be used when scanning multiple documents of a standard size at one time. Standard paper feeding enables multiple documents to be fed while separating each page.

1 Pull out the document eject tray.

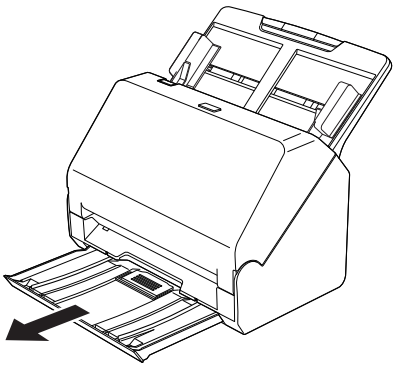

The document eject tray can be adjusted to 3 lengths. Pull out the document eject tray according to the length of the document. Also, erect the document eject stopper on the front edge if necessary.

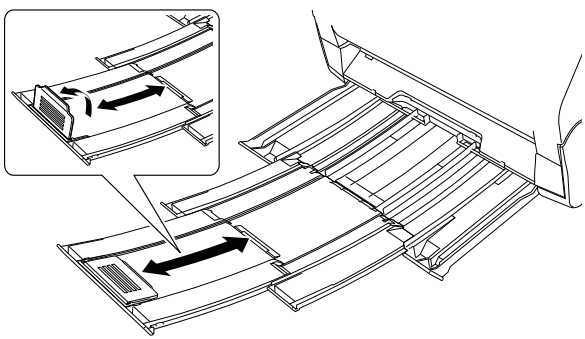

IMPORTANT

Pull the document eject tray forward according to the various lengths.

2 Pull out the feed support.

Open the feed extension support when placing long documents.

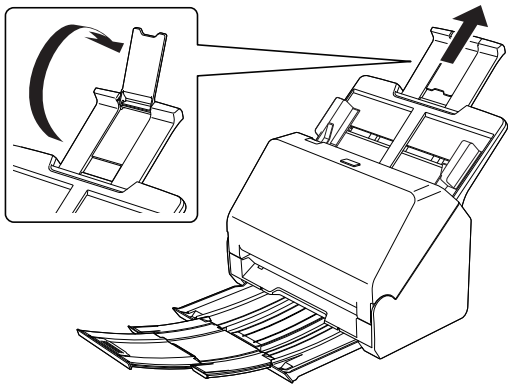

3 Adjust the document guides to fit the width of the document to be scanned.

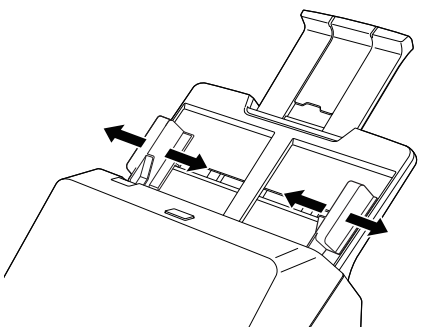

4 Place the document.

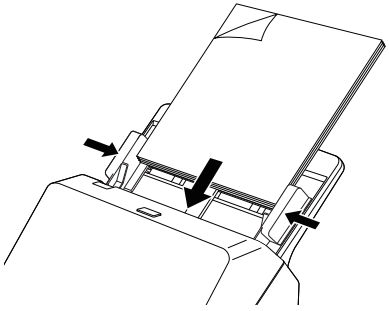

After placing the document, align the document guides with both edges of the document.

IMPORTANT

- When placing documents into the feed tray, take care not to cut your hand on the edges of the paper.
- Before you place a document, check to make sure it does not contain paper clips, staples, or other small metal objects. These items may cause a fire or electrical shock, damage the document, or cause a paper jam or scanner malfunction.
- Do not wear loose clothing or jewelry that may get caught in the scanner while you are using it, as this may result in personal injury. Be extra careful of neckties and long hair. If anything gets caught in the scanner, immediately turn OFF the power button, and disconnect the power cord from the power outlet to stop scanning.
- Always smooth out any folds or curls in your documents before placing them into the feeder. If the leading edge of a document is curled, it may cause a paper jam.
- If feeding stops due to a system error or paper jam while the scanner is scanning, resolve the problem, make sure that the scanned image of the last page that was successfully fed has been stored, and then resume scanning the remaining document pages.
- After you finish scanning, push in the document eject tray to prevent damage to the scanner while it is not being used.
- When scanning multiple page documents that are fastened together, such as invoices, place the documents so that the edge that is fastened together is facing down.
- If double-feeding occurs, reduce the number of pages that you load into the scanner at one time.

Placing Cards

When scanning cards, place one card at a time horizontally.

1 Adjust the document guides to fit the width of the card to be scanned.

2 Place the card horizontally, with the reverse side facing you, and the top of the card facing down.

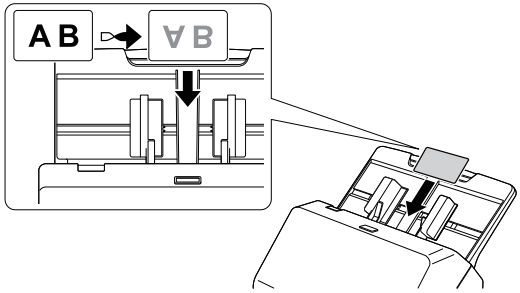

CAUTION

- Place the cards one at a time.
- When scanning cards, place them to be fed horizontally. If you place cards to be fed vertically, they may not be ejected properly, and cards that get jammed may be damaged when you remove them.

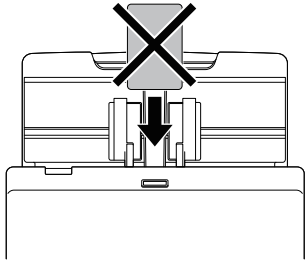

Detecting a document double feed

This scanner includes a function to detect document double feeds. By using this function, the scanner will automatically stop when it detects that multiple documents have been fed at the same time.

Setting procedure

1 **Set the scanning conditions.**

➡ Windows

➡ Mac

2 **Place the document as described in the "Scanning multiple documents" procedure on p. 18.**

Windows

1 **Open the advanced settings dialog box. (See p. 37)**

2 **Click the [Feeding] tab.**

3 **Select the [Double Feed Detection] check box on the [Feeding] tab. You can enable the [Detect by Length].**

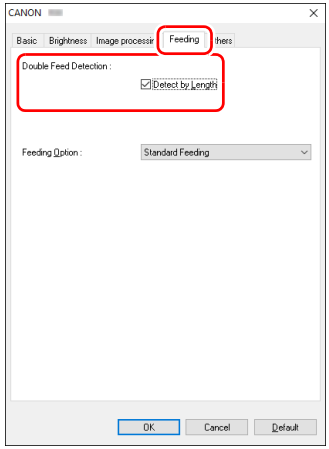

Feeding >
Double Feed Detection >
Detect by Length : ON

Hint

Stops document transport when a transported document is detected to be 35 mm (1.38") longer (or shorter) than the length of the first fed document and a double feed is judged to have occurred. Ideal when scanning a batch of identical size documents. It may not work properly when scanning a batch of varying size documents.

4 **Click the [OK] button and close the settings screen.**

Mac

1 **Open the advanced settings dialog box.** **(See p. 39)**

2 **Select the [Double Feed Detection] check box, and then select the [Detect by Length].**

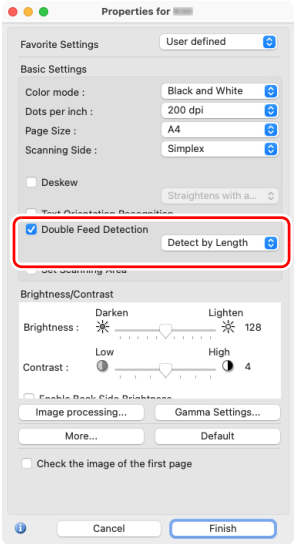

Double Feed Detection : ON

Hint

Stops document transport when a transported document is detected to be 35 mm (1.38") longer (or shorter) than the length of the first fed document and a double feed is judged to have occurred. Ideal when scanning a batch of identical size documents. It may not work properly when scanning a batch of varying size documents.

3 **Click the [Finish] button and close the dialog box.**

Scanning with CaptureOnTouch Lite

What is CaptureOnTouch Lite?

CaptureOnTouch Lite is a scanning application that comes preinstalled in the scanner. It can be used on a computer that does not have the scanner driver installed.

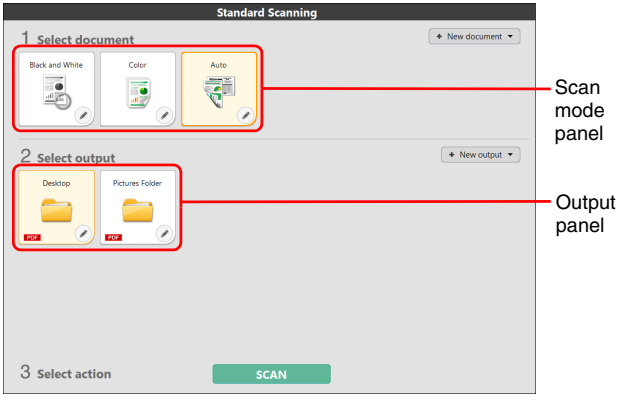

Click the scan mode and output panels, and then click the [SCAN] button to scan the document. You can select the scan method according to the document type and purpose of use before scanning.

Scanning Procedure

This section describes how to scan when using CaptureOnTouch Lite.

1 **Make sure that the scanner and computer are connected properly.**

2 **Press the power button, and then load the document.**

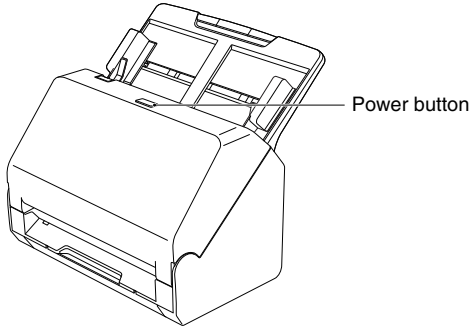

For details, see “How to Place Documents” on p. 18.

Windows

Mac

Windows

When you turn ON the scanner, the Power button on the scanner lights and the window shown below opens automatically.
If you double-click the [ONTOUCH L] icon, CaptureOnTouch Lite starts up and the main screen opens.

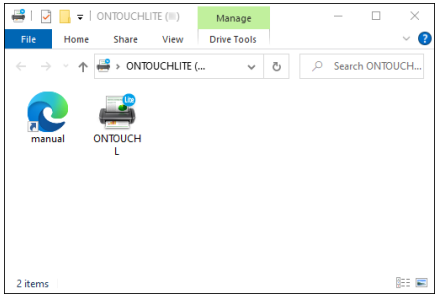

If you double-click the [manual] icon, the User Manual appears.

IMPORTANT

If you close the screen that the [ONTOUCH L] icon is displayed, press and hold the power button to turn the power OFF. Then press the power button again to turn the power ON.

* An error message may appear when you turn the power off, but ignore the message.

Hint

- The [ONTOUCHLITE] screen may not appear in some operating environments. In such cases, open the [ONTOUCHLITE] drive in Windows Explorer, for example, and start the application directly by double-clicking [ONTOUCHL.exe].
  Depending on your operating system, the drive name may not be [ONTOUCHLITE]. Open the drive on which [ONTOUCHL.exe] is located, and start the application directly.
- Depending on your operating system, [CaptureOnTouch Lite] may appear in the [AutoPlay] screen. In such cases, double-click [CaptureOnTouch Lite] to start CaptureOnTouch Lite.

Mac

When you turn ON the scanner, the Power button on the scanner lights and the Finder window shown below opens automatically.
If you click the [CaptureOnTouch Lite Launcher] icon, CaptureOnTouch Lite starts up and the main screen opens.

If you click the [manual.url] icon, the User Manual appears.

IMPORTANT

If you close the screen that the [CaptureOnTouch Lite Launcher] icon is displayed, press and hold the power button to turn the power OFF. Then press the power button again to turn the power ON.

* An error message may appear when you turn the power off, but ignore the message.

Hint

- To run CaptureOnTouch Lite, both the [CaptureOnTouch Lite for Mac] folder and the [ONTOUCHLITE] folder must be mounted.
- In macOS, when you start CaptureOnTouch Lite for the first time, message screens appear regarding access to the removable volume. Click [OK] to continue. For details, see "When using macOS" on p. 26.

If there is an update for CaptureOnTouch Lite when the computer is connected to the Internet, the software update notice screen appears. For details on updating, see “Updating CaptureOnTouch Lite” on p. 60.

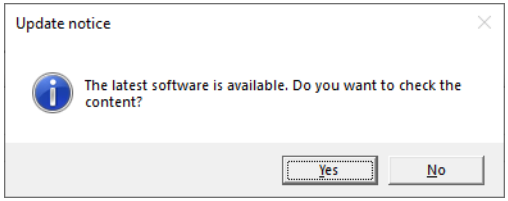

3 **Click the scan mode panel appropriate for the document to be scanned in [1 Select document].**

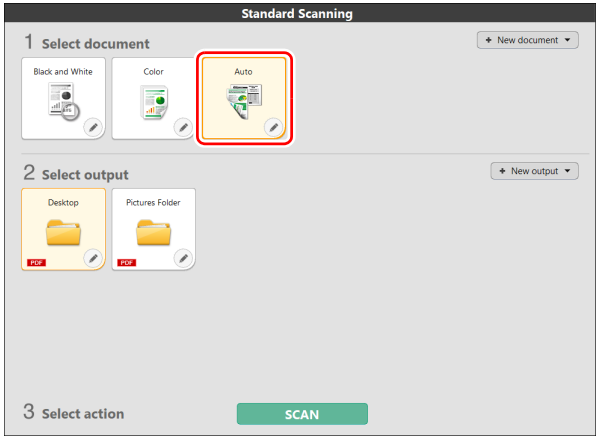

The selected Scan mode panel will be displayed in orange. To edit the Scan mode panel, see “Setting the scan mode” on p. 32.

4 **Click the output panel for the scan image application from [2 Select output].**

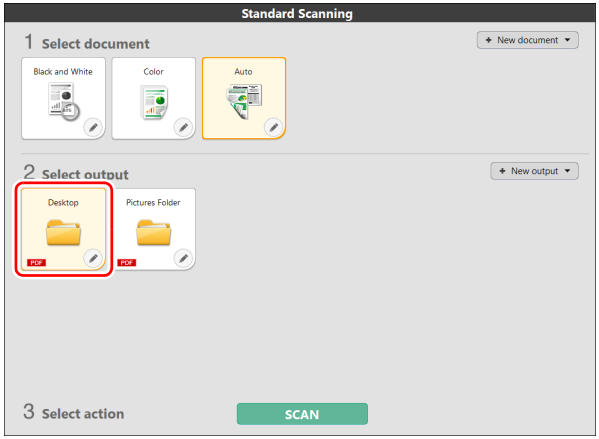

The selected output panel will be displayed in orange. To edit the output panel, see “Setting the output” on p. 35.

5 Click the [SCAN] button.

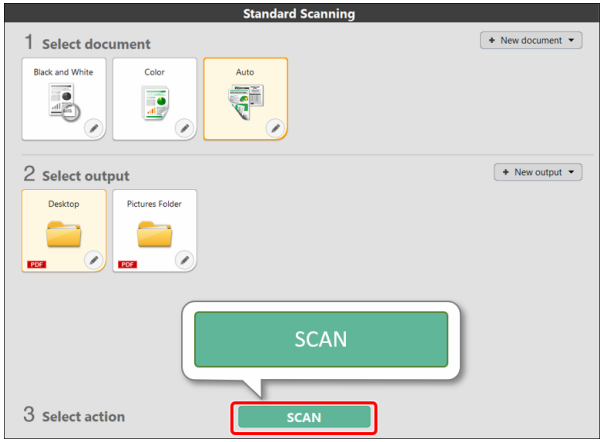

The document is scanned. While scanning is in progress, the number of pages scanned is displayed in addition to the scanner settings.
When the scan is finished, the Scanned image preview screen opens.

IMPORTANT

If you configure scanning conditions that consume a large amount of the computer's memory, scanning may stop because of insufficient memory. If an error message appears due to insufficient memory while scanning is in progress, stop scanning, change the scanning conditions, and then try scanning again.

Hint

If scanning continuously, set the next document, and click the [Scan more pages] button to start the document scan.

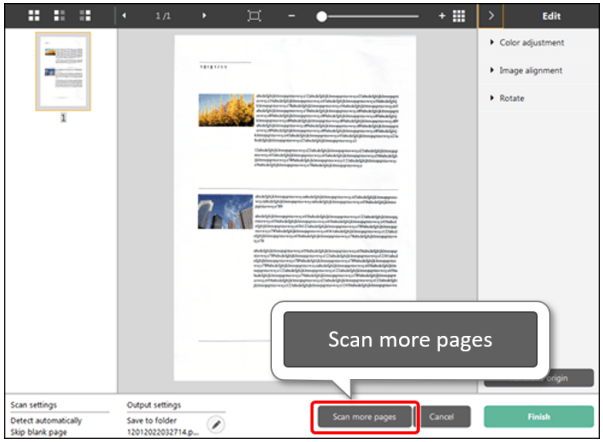

6 After confirming the scanned image, click the [Finish] button.

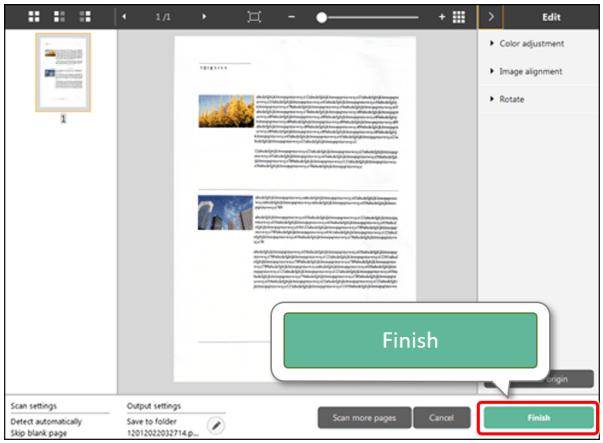

To edit scan images, see "Operations for the scanned image edit window" on p. 29.
Click the [ ] button to edit the output settings.

Click the [Cancel] button to discard the scanned image and return to the main window.

7 When the output has finished, a popup window will be displayed. If saving the scanned image, a link to open the save destination folder will be displayed.

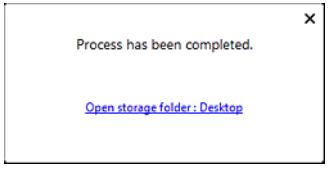

Hint

If you specify an output method other than Print or E-mail attachment, the [Open storage folder] button appears. This button opens the folder where the saved scanned images were saved.

When using macOS

In macOS, when you start CaptureOnTouch Lite for the first time, two message screens appear before the application launches. Click [OK] on both screens. The procedure is as follows.

1 When launching CaptureOnTouch Lite Launcher, the following screen appears. Click [OK] to close the screen and proceed to the next step.

If [Don't Allow] is clicked, an error message appears and CaptureOnTouch Lite Launcher cannot be launched. See "macOS System Preferences" on p. 27.

2 When launching CaptureOnTouch Lite via CaptureOnTouch Lite Launcher, the following screen appears. As in the previous step, click [OK] to close the screen. CaptureOnTouch Lite launches.

If [Don't Allow] is clicked, CaptureOnTouch Lite still launches but an error message appears and scanning operations are disabled. See "macOS System Preferences" on p. 27.

macOS System Preferences

If [Don't Allow] is clicked on the message screen displayed when CaptureOnTouch Lite Launcher is launched for the first time, then CaptureOnTouch Lite cannot be used. In this case, open [System Preferences], and click [Security & Privacy] > [Privacy] tab > [Files and Folders]. Place a check mark in [Removable Volumes] for both [CaptureOnTouch Lite Launcher] and [CaptureOnTouch Lite] in the list.

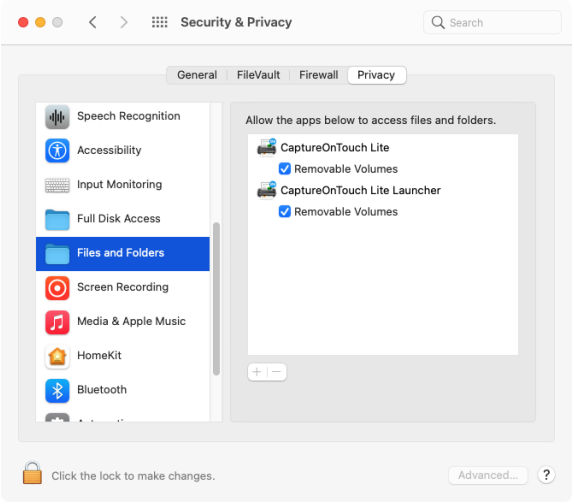

Starting and Exiting CaptureOnTouch Lite

Once you start CaptureOnTouch Lite it remains present in the system.

Windows

Double-click (CaptureOnTouch Lite icon) in the taskbar to start CaptureOnTouch Lite and display the main window.
To close the CaptureOnTouch Lite window, click ✕ at the top of the window. This closes the window, but CaptureOnTouch Lite will continue to reside in the system.

Mac

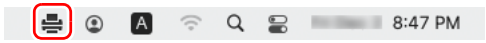

Click (CaptureOnTouch Lite icon) in the menu bar and then click [Launch CaptureOnTouch] from the menu which appears to start CaptureOnTouch Lite and display the main window.
To close the CaptureOnTouch Lite window, click at the top of the window. This closes the window, but CaptureOnTouch Lite will continue to reside in the system.

To quit the residence of the CaptureOnTouch Lite application

Windows

1 Click (CaptureOnTouch Lite icon) in the taskbar, and then from menu select [Exit].

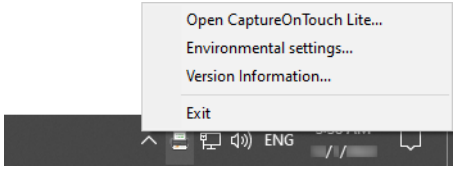

CaptureOnTouch Lite is no longer resident in the system and the icon disappears from the taskbar.

2 Press and hold the power button until the indicator goes out.

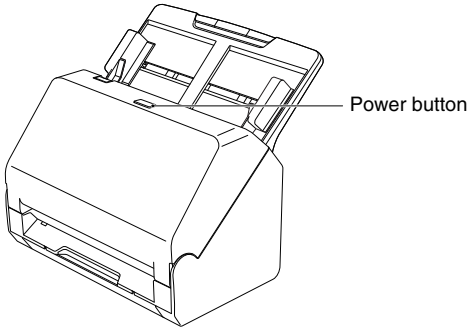

The scanner turns OFF.

3 Disconnect the USB cable from the scanner and computer.

Mac

1 Click (CaptureOnTouch Lite icon) in the menu bar, and select [Exit] from the menu.

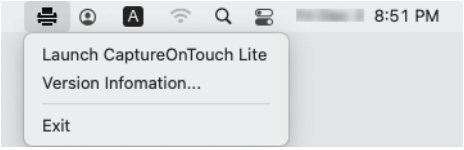

2 Drag and drop the [ONTOUCHLITE] folder and [CaptureOnTouch Lite for Mac] folder onto the [Trash] icon.

Hint

If a message appears when moving the folder to the Trash, click [Force Eject]. This operation will not affect the operation of CaptureOnTouch Lite.

3 Press and hold the power button until the indicator goes out.

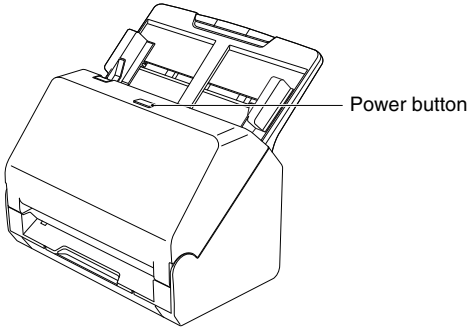

The scanner turns OFF.

4 Disconnect the USB cable from the scanner and computer.

Operations for the scanned image edit window

When scanning has finished, a preview window of the scanned image will be displayed.

To display the edit window in the preview window, click on the tool bar.

Scanned image preview screen

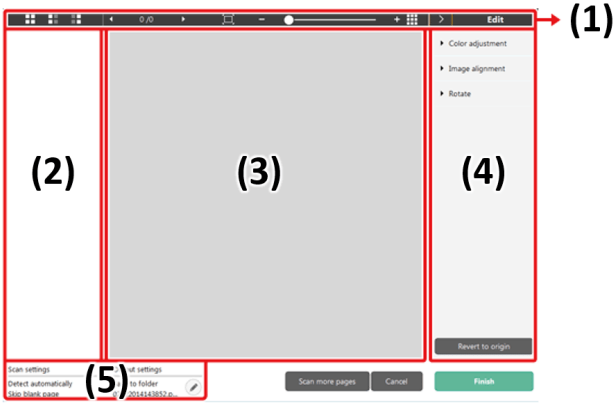

(1) Toolbar

This tool bar enables operations to thumbnails and preview images.

Tools	Description
	Switches the image selection for the thumbnail area. These buttons mean “All pages”, “Odd pages” and “Even pages” from the left.
1 /3	Indicates the page of the image displayed on the preview. Click to change the page to be displayed.
	Changes the display magnification. Move the slider to + (plus) or - (minus) to enlarge or reduce the preview image. Click to make the display magnification of the preview enlarged to full-screen.
	Click to display or hide the preview area.
Edit	Click to display or hide the Edit window.

(2) Thumbnail Display Area

Thumbnails of the scanned documents will be displayed. You can implement the following operations.
Click a thumbnail to display a preview of the scanned image in the preview window.
Drag a thumbnail to change pages.

(3) Preview Area

The preview images of scanned documents are displayed.

(4) Edit window

You can edit scanned documents.
Click an item to open the edit window.
Click the [Revert to origin] button to discard the edit results and return to the previous scan image.

[Color adjustment] (Typical settings)

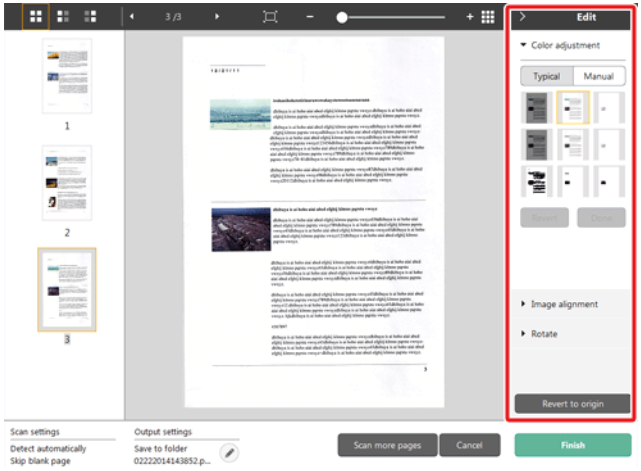

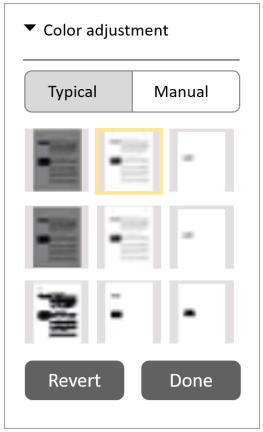

Click [Color adjustment] to display the default.
Click the button to toggle between the typical settings and manual settings displays.

Click a thumbnail in typical color adjustment to select the most suitable preview image that is displayed.

9 thumbnail patterns are displayed for the relevant image in color, and 6 patterns in grayscale.

When adjustment is finished, click the [Done] button. To cancel the adjustment, click the [Revert] button.

[Color adjustment] (Manual settings)

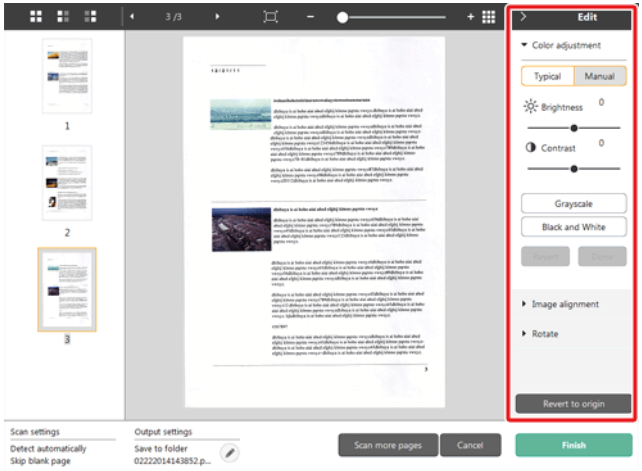

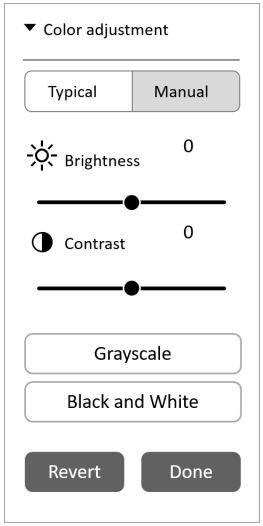

Move the slider to the left or right to adjust the brightness and contrast of the image, checking the preview image.

Click the [Grayscale] button to render the image in grayscale.

Click the [Black and White] button to render the image using 2 values: black and white.

When adjustment is finished, click the [Done] button. To cancel the adjustment, click the [Revert] button.

[Image alignment]

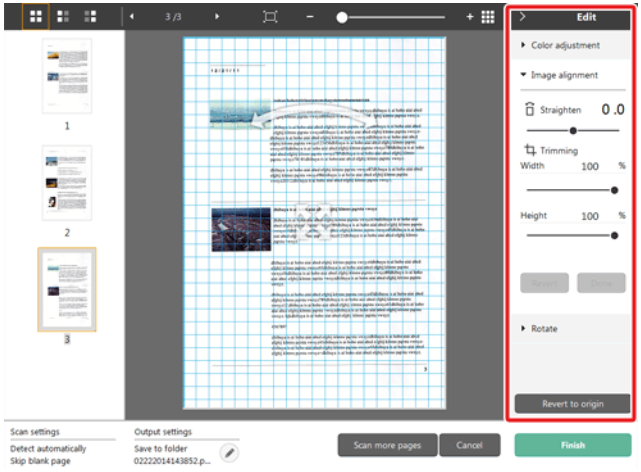

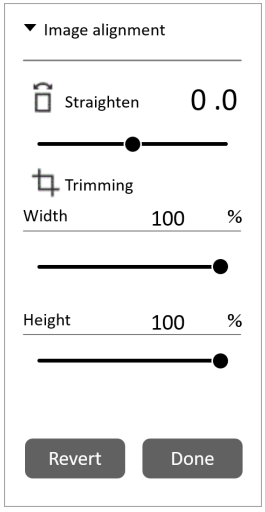

Click [Image alignment] to display. The preview image or the slider can be used for the straightening and the trimming.

In the preview image, drag the Move grip , the Straighten grip and/or the trimming frame directly. To change the extent of the trimmed image, drag the Move grip on the preview.

When adjustment is finished, click the [Done] button. To cancel the adjustment, click the [Revert] button.

[Rotate]

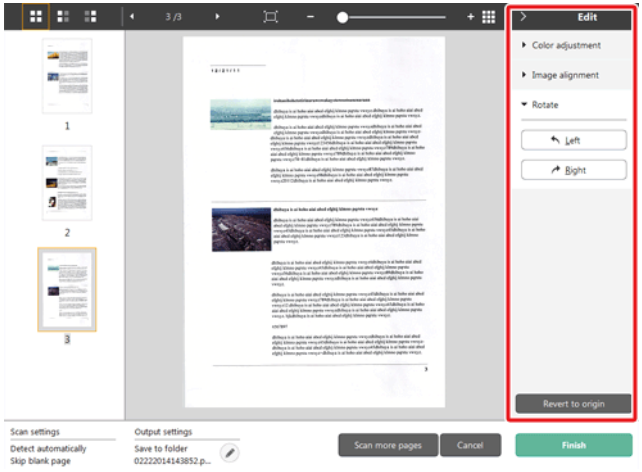

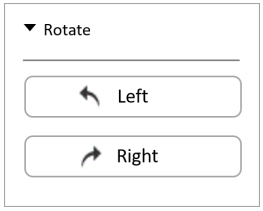

Click [Rotate] to display.
The scanned image can be rotated in 90 degrees to the left or the right. The rotation can be adjusted according to the preview image.

(5) Information Display Area

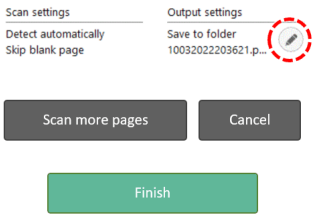

The information regarding the scan settings and output settings is displayed.

Click the button, and the Output Settings dialog will appear.

Click the [Scan more pages] button to continue the scanning.

Clicking the [Cancel] button will destroy the scanned images and return to the top screen.

When clicking the [Finish] button, the output processing will start. After it is completed, the screen will return to the top screen.

Setting the scan mode

By default, CaptureOnTouch Lite enables the [Full auto] scan setting, so shortcut scans saved to the folder are implemented using the scan conditions that match the document.

To specify the document size, color mode, and other settings, set the desired scan condition by editing the scan mode panel.

Creating new Scan mode panels

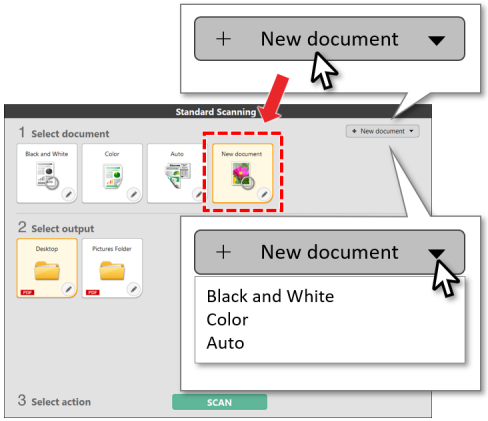

Click the [New document] button of [Select document] in the [Standard Scanning] screen to add a [New document] panel.
Click to display the list of panel types. The selected type of the panel is created.

Edit Scan mode panel

The scan mode edit screen opens when you click the [ ] button in the scan mode panel.

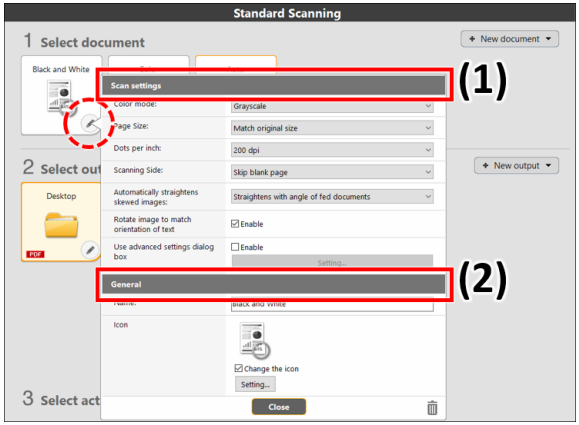

(1) Scan settings

Makes the scan settings.

[Color mode]

Select the color mode for scanning from below.

Detect automatically	Automatically determines the color mode based on the document content and scans accordingly.
24-bit Color	Scans the document in color.
Grayscale	Scans the document in Grayscale.
Black and White	Scans the document in black and white (binary).

[Page Size]

Select the paper size of the document to be scanned.

Match original size
A4
A5
A6
B5
B6
LEGAL
LETTER

If you specify [Match original size], the page size of the scanned document is detected and the images are saved at the detected size.

[Dots per inch]

Select the resolution.

Detect automatically
150 dpi (Speed Priority)
200 dpi
300 dpi
400 dpi
600 dpi (Quality Priority)

Select [Detect automatically] and the software will automatically scan the document at the optimum resolution.

[Scanning Side]

Select the scanning side of the document.

Skip blank page
Simplex
Duplex

If you select [Skip blank page], scanned images of blank pages are not saved.

[Automatically straightens skewed images]
If a document is not straight when fed, the scanner detects that the document is not straight from the scanned image and straightens the skewed image.
Select the setting from below.

OFF
Straightens with angle of fed documents
Straightens with angle & contents of fed documents

[Rotate image to match orientation of text]
Check [Enable] on to rotate the image in the same direction with the characters.

[Use advanced settings dialog box]
Scan mode settings include basic items that are configured in [Scan settings], and the settings that are configured in the advanced settings dialog box. The settings in the advanced settings dialog box are applied for settings other than the basic items.
If you set the [Enable] checkbox of [Use advanced settings dialog box] to ON and click the [Setting] button, the advanced settings dialog box appears.

Hint

The advanced settings dialog box includes setting items that are the same as the basic items in [Scanner setting], but the setting for each of the them is stored separately.

Which settings are used during scanning differs as follows depending on the setting of the [Use advanced settings dialog box] check box.

Setting of [Use advanced settings dialog box]	Basic items	Other than basic items
OFF	Settings of [Scanner setting]	Settings of the advanced settings dialog box
ON	Settings of the advanced settings dialog box	

For details on the advanced settings dialog box, see "Configuration and Functions of the Advanced Settings Dialog Box" on p. 37.

(2) General

Set the following items as occasion demands.

[Name]
Enter the name to be displayed in the Scan mode panel.

[Icon]
You can change the icon displayed in the scan mode panel.
Enable [Change the icon] to enable the [Setting] button and select the file.
The file formats that can be selected as icon files are described below.

Windows
- .ico, .exe, .jpg, .png

Mac
- .icns, .app, .jpg, .png

Setting the output

By default, CaptureOnTouch Lite enables the settings to converts the scanned images to PDF file and save to a folder.

To specify the output method and save location, edit the output panel and set the desired output.

Create new Output panel

Click the [New output] button to add a [New output] panel.
Click ▾ to display the list of panel types. The selected type of the panel is created.

Edit Output panel

The Edit output screen opens when you click the [ ] button in the Output panel.

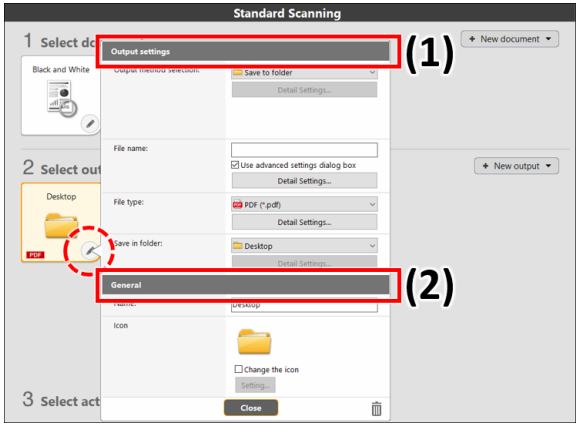

(1) Output settings

Makes the output settings.

[Output method selection]
Only [Save to folder] is available for the method to output scanned images.

Save to folder

[File name]
Enter the file name of scanned image. Maximum: 64 characters.

Hint

- ¥ / : * ? < > | “ characters cannot be used.
- Click [Detail Settings] button to configure the file name generation rule.

[File type]
Specify the file format for saving the scanned image.
If PDF, JPEG, TIFF, or PPTX is selected, [Detail Settings] button is enabled and the details of file type can be configured.

[Save in folder]
Specify the storage location for scanned images.
It hides if the output method other than [Save to folder] is selected.
Select the saving location from below.

Pictures
Documents
Desktop
(Specified folder path)
Browse

Click [Detail Settings] button to display [Folder settings] dialog. You can configure the credentials (user name and password) for the access to the specified folder.

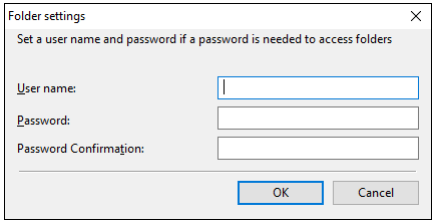

(2) General

Set the following items as occasion demands.

[Name]
Enter the name to be displayed in the Output panel.

[Icon]
You can change the icon displayed in the Output panel.
Enable [Change the icon] to enable the [Setting] button and select the file.
The file formats that can be selected as icon files are described below.

Windows
- .ico, .exe, .jpg, .png

Mac
- .icns, .app, .jpg, .png

Setting the Advanced Settings Dialog Box

If you enable [Use advanced settings dialog box] of [Scan settings] and then click the [Setting] button when setting the scan mode in CaptureOnTouch Lite, the advanced settings dialog box appears.

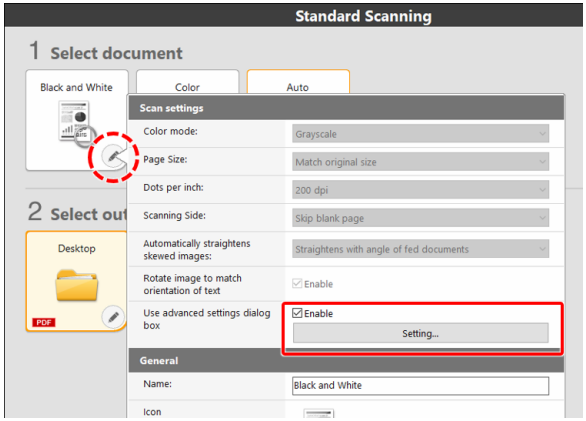

Configuration and Functions of the Advanced Settings Dialog Box

Windows

Mac

Windows

The advanced settings dialog box consists of the following tabs.

[Basic] tab

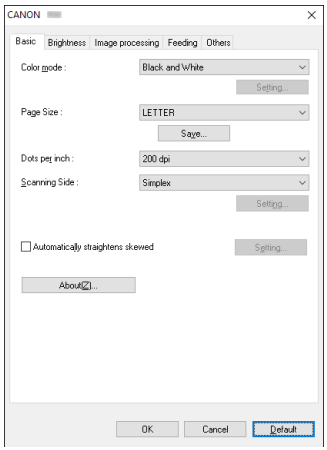

Configure basic scanning conditions such as the mode, page size, resolution, and scanning side.

[Brightness] tab

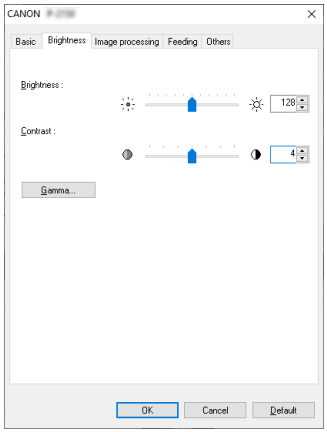

Adjust the brightness and contrast of scanned images.
In addition, you can also click [Gamma] and set the gamma correction value for scanned images.

Hint

- Gamma correction is set when the color tone of the scanned image is different from that of the image displayed on the monitor.
- For information on your monitor's gamma value, see the instruction manual that came with the monitor.

[Image processing] tab

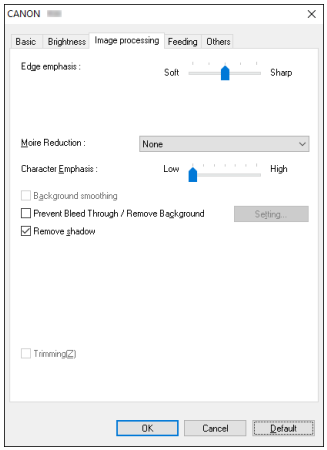

Set the processing method for scanned images.

[Feeding] tab

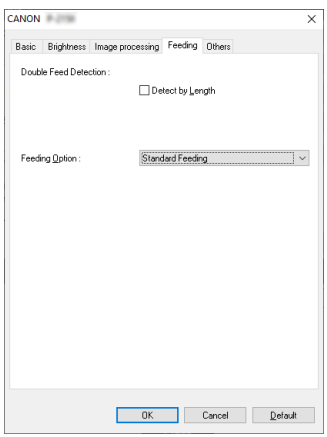

Specify scanner operations related to document feeding.

[Others] tab

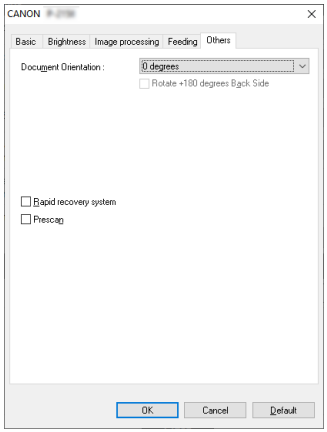

Configure special scan method and image processing settings.

Mac

When the advanced settings dialog box is opened from CaptureOnTouch Lite, the following settings screen appears.

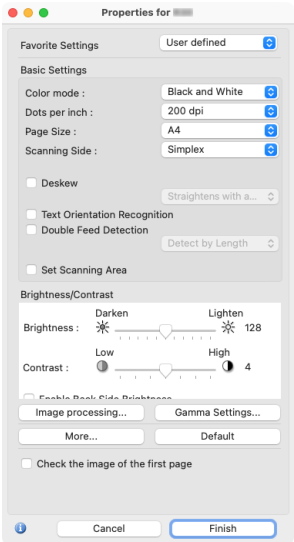

Scanning Documents of Unregistered Page Sizes

Windows

You can register a non-standard page size that has not been registered as a page size by naming and registering it as a custom page size in the Custom Paper Size dialog box, which is opened from the [Save] button on the [Basic] tab.

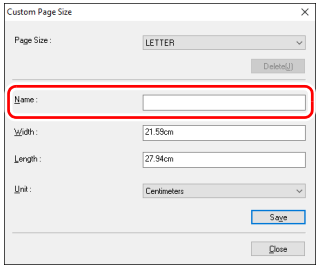

Mac

Configuring the following settings allows you to scan a document of an unregistered page size.
When scanning a document of a non-standard page size, select [Add/Delete] for [Page Size] to display the [Add/Delete Page Size] dialog box. Name and register the unregistered page size in [Page Size].

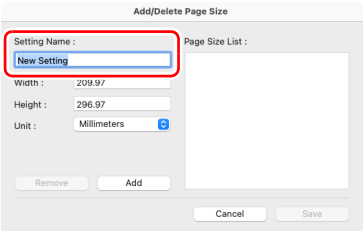

Setting Basic Scanning Conditions

This section provides an overview of the basic setting items that are the minimum requirements when configuring the scanner settings.

Windows
Mac

Windows

Confirming Basic Conditions for Scanning

When you scan a document, make sure you confirm the [Color mode], [Page Size], [Dots per inch], and [Scanning Side] basic conditions in the advanced settings dialog box.

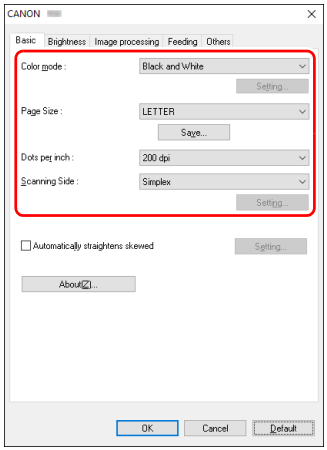

Color mode

Select the scanning mode.

Detect automatically
Black and White
Advanced Text Enhancement II
256-level Gray
24-bit Color

- [Advanced Text Enhancement II] removes or processes the background color and background surrounding text to enhance the text for easy reading. When [Advanced Text Enhancement II] is selected, you can make the text in scanned images easier to read by adjusting the contrast on the [Brightness] tab.
- [Detect automatically] detects whether the document is in color, grayscale, or black and white. You can configure advanced settings related to the detection method by clicking [Setting].

Page Size

Select the page size that matches the document to be scanned.

Match original size
A4
A5
A5R
A6
A6R
B5
B6
B6R
LEGAL
LETTER
Scanner's Maximum

If [Match original size] is selected, the edges of the document are detected and images that match the size of the document are saved. Further, [Trimming] in the [Image processing] tab is enabled only when [Match original size] is selected.

Dots per inch

Select the scanning resolution.

Detect automatically
150 dpi
200 dpi
300 dpi
400 dpi
600 dpi

- Higher resolutions provide clearer images but result in larger file sizes and slower scanning.
- When [Detect automatically] is specified, the resolution is detected automatically from the content printed in the document.

Scanning Side

Select which of the sides of the document to scan.

Skip blank page
Simplex
Duplex

If the scanning side is set to [Skip blank page], the images of blank pages are deleted when images are saved.

Mac

Confirming Basic Conditions for Scanning

When you scan a document, make sure you confirm the [Color mode], [Dots per inch], [Page Size], and [Scanning Side] basic conditions in the advanced settings dialog box.

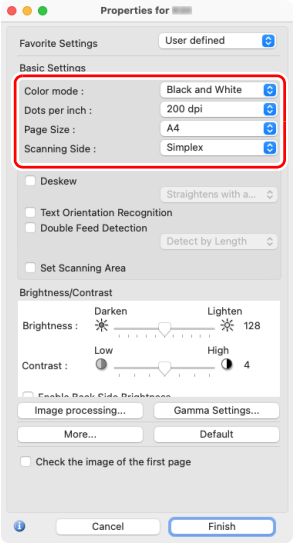

Color mode

Select the scanning mode.

Detect automatically
Black and White
Advanced Text Enhancement II
256-level Gray
24-bit Color

- [Advanced Text Enhancement II] removes or processes the background color and background surrounding text to enhance the text for easy reading.
- [Detect automatically] detects whether a document is color, grayscale, or black and white based on its content. When this is selected, you can configure detailed settings for the detection method.

Dots per inch

Select the scanning resolution.

Detect automatically
150 dpi
200 dpi
300 dpi
400 dpi
600 dpi

- Higher resolutions provide clearer images but result in larger file sizes and slower scanning.
- When [Detect automatically] is specified, the resolution is detected automatically from the content printed in the document.

Page Size

Select the page size that matches the document to be scanned.

Detect automatically
A4
A5
A5R
A6
A6R
B5
B6
B6R
LEGAL
LETTER
Scanner's Maximum

If [Detect automatically] is selected, the edges of the document are detected and images that match the size of the document are saved. Further, the [Trimming] dialog box displayed when you click [More] in the advanced settings dialog box is enabled only when [Detect automatically] is selected.

Scanning Side

Select which of the sides of the document to scan.

Skip blank page
Simplex
Duplex

If the scanning side is set to [Skip blank page], the images of blank pages are deleted when images are saved.

Function Restrictions Depending on Mode Setting

Windows

Mac

Windows

Some of the setting items in each of the advanced settings dialog box tabs are disabled as follows depending on the setting for [Color Mode] on the [Basic] tab.

[Brightness] tab

Setting value	Contrast
Detect automatically	✓
Black and White	✓
Advanced Text Enhancement II	✓
256-level Gray	✓
24-bit Color	✓

✓: Available for setting Blank: Not available for setting

[Others] Tab

Setting value	Prescan
Detect automatically	
Black and White	✓
Advanced Text Enhancement II	✓
256-level Gray	✓
24-bit Color	✓

✓: Available for setting Blank: Not available for setting

[Image processing] tab

Setting value	Edge emphasis	Character Emphasis	Background smoothing	Prevent Bleed Through / Remove Background
Detect automatically	✓	✓[2)]	✓	✓[1)]
Black and White	✓	✓		✓
Advanced Text Enhancement II		✓		
256-level Gray	✓		✓	✓
24-bit Color	✓		✓	✓

✓: Available for setting Blank: Not available for setting

[1)]Not available for setting if all of the following conditions in the [Auto Image Type Detection Settings] dialog box are met.

- [Detection Mode] is not set to [Color or Gray]
- [Mode in case of binary] in the [Settings for in case of binary] tab is set to [Advanced Text Enhancement II]

[2)]Not available for setting when [Detection Mode] is set to [Color or Gray] in the [Auto Image Type Detection Settings] dialog box.

Mac

Some of the setting items are disabled as follows depending on the setting for [Color Mode] in the advanced settings dialog box.

[Properties for R30] dialog box

Setting value	Enable Back Side Brightness	Enable Back Side Contrast	Check the image of the first page
Detect automatically	✓	✓	
Black and White	✓	✓	✓
Advanced Text Enhancement II			✓
256-level Gray	✓	✓	✓
24-bit Color	✓	✓	✓

✓: Available for setting Blank: Not available for setting

[Image processing] dialog box

Setting value	Edge emphasis	Background smoothing	Character Emphasis	Prevent Bleed Through / Remove Background
Detect automatically	✓	✓[1)]		
Black and White	✓		✓	✓
Advanced Text Enhancement II			✓	
256-level Gray	✓	✓		✓
24-bit Color	✓	✓		✓

✓: Available for setting Blank: Not available for setting

[1)]Only when [Detection mode] is set to [Color or Gray] in the settings screen that appears after [Detect automatically] is selected.

Configuring Scanner Settings According to Purpose

Set the scanning conditions according to the scanning purpose.

When you want to delete the images of the blank pages in two-sided documents

Windows

Set the scanning side setting to [Skip blank page] on the [Basic] tab to delete the images of the blank pages in the document.

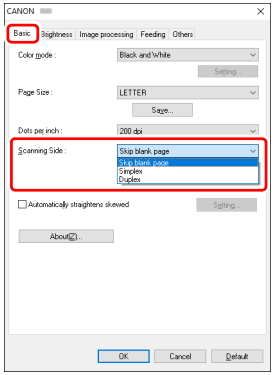

Basic > Scanning Side :

Skip blank page
Simplex
Duplex

If [Skip blank page] is selected, the [Setting] button is enabled, and you can adjust the level for judging whether pages are blank.

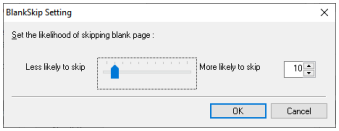

Mac

Set the scanning side setting to [Skip blank page] to delete the images of the blank pages in the document.

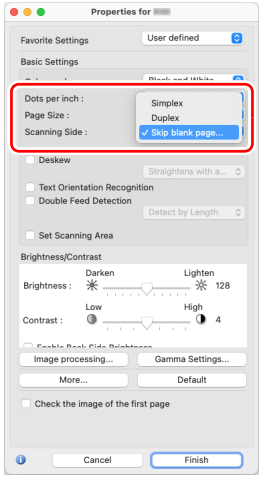

Scanning Side :

Simplex
Duplex
Skip blank page

If [Skip blank page] is selected, you can adjust the level for judging whether pages are blank.

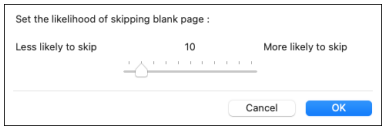

When you want to enhance contours in images

Windows

Adjust the edge emphasis setting on the [Image processing] tab.

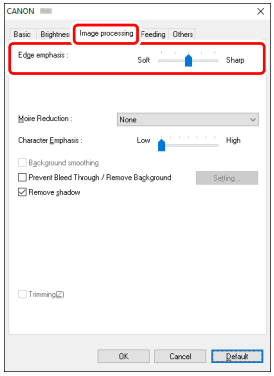

Image processing >
Edge emphasis :

Mac

Click [Image processing] and adjust the edge emphasis settings in the dialog box which appears.

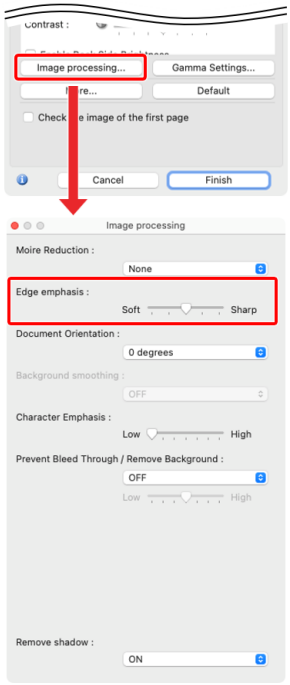

Image processing >
Edge emphasis :

When you want to make lines and text in scanned images thicker or thinner

Windows

Drag the [Character Emphasis] slider in the [Image processing] tab to make lines and text in the scanned images thicker or thinner.

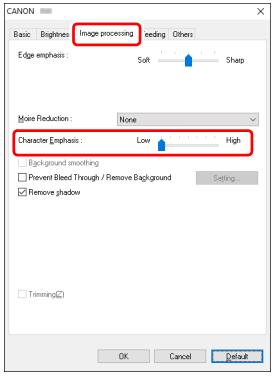

Image processing > Character Emphasis :

Mac

Click [Image processing], and in the dialog box that appears adjust letter and line thickness settings.

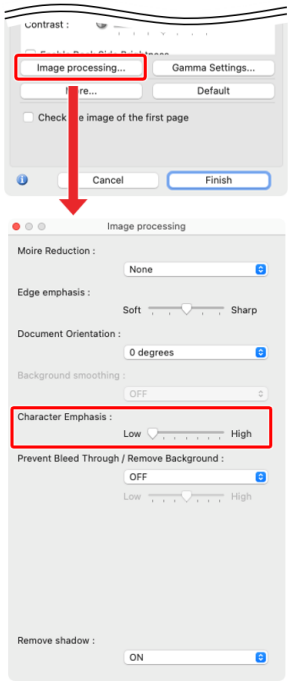

Image processing > Character Emphasis :

When you want to enhance text that is difficult to read because of factors such as the background of the scanned document

Windows

Select [Advanced Text Enhancement II] in the mode setting on the [Basic] tab. The background behind the text is removed or processed so that the text is emphasized for better readability.

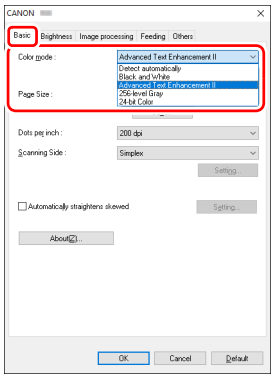

Basic >
Color mode :

Detect automatically
Black and White
Advanced Text Enhancement II
256-level Gray
24-bit Color

Advanced Text Enhancement II is suitable for scanning a document with a uniform background color and light text and background. If the background is non-uniform, such as a pattern, the background may not be able to be completely removed and the text may become difficult to read. If necessary, you can make the text in scanned images easier to read by adjusting the contrast on the [Brightness] tab.

Mac

Select [Advanced Text Enhancement II] in the [Color mode] setting. The background behind the text is removed or processed so that the text is emphasized for better readability.

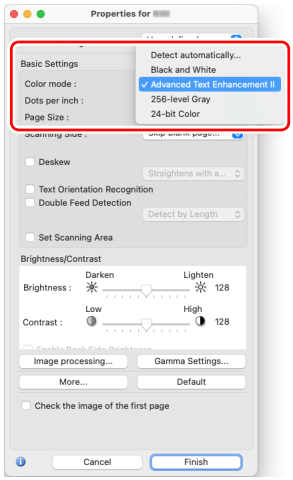

Color mode :

Detect automatically
Black and White
Advanced Text Enhancement II
256-level Gray
24-bit Color

When you want to match the orientation of images to the text when scanning a mixture of pages with different text orientations

Windows

Select [Text orientation recognition] in [Document Orientation] on the [Others] tab. The text orientation on each page is detected, and the scanned image is rotated in 90-degree increments to correct the orientation.

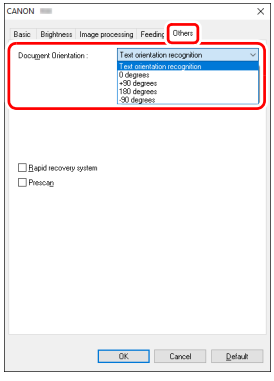

Others >
Document Orientation :

Text orientation recognition
0 degrees
+90 degrees
180 degrees
-90 degrees

Mac

Select the [Text Orientation Recognition] check box. The text orientation on each page is detected, and the scanned image is rotated in 90-degree increments to correct the orientation.

Text Orientation Recognition : ON

Hint

When the [Text Orientation Recognition] check box is selected, [Document Orientation] is unavailable.

When you want to rotate the images of a document placed horizontally to correct the orientation

Windows

Specify the rotation angle in [Document Orientation] on the [Others] tab.

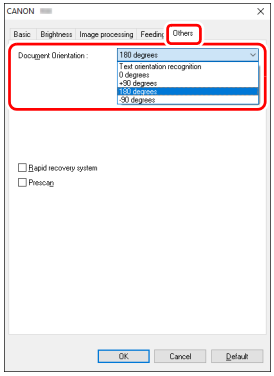

Others >
Document Orientation :

Text orientation recognition
0 degrees
+90 degrees
180 degrees
-90 degrees

Mac

Click [Image processing] and specify the rotation angle in [Document Orientation] in the dialog box that appears.

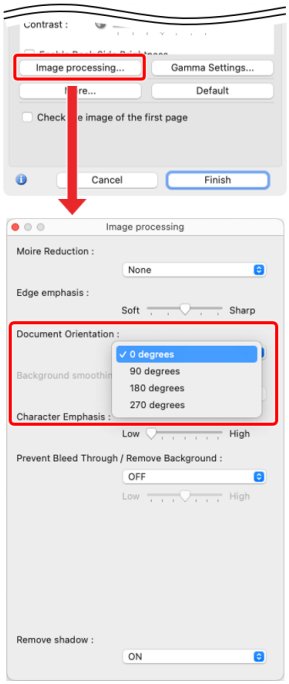

Image processing >
Document Orientation :

0 degrees
90 degrees
180 degrees
270 degrees

To correct tilted documents and images

Windows

Place a check in [Automatically straightens skewed] under the [Basic] tab, and then click [Setting] to display the [Deskew Settings] screen.

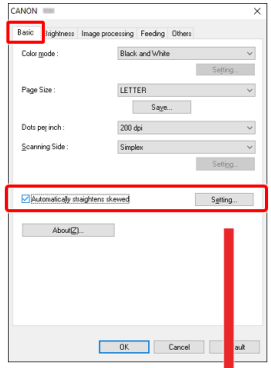

Basic > Automatically straightens skewed : ON

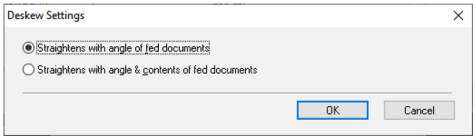

Select a correction method and click [OK].

Mac

Click the [Deskew] check box to ON. You can select either [Straightens with angle of fed documents] or [Straightens with angle & contents of fed documents].

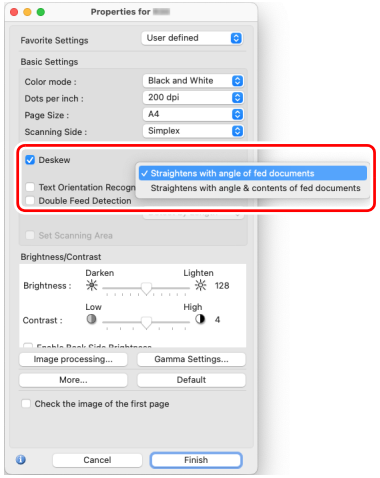

Deskew :

Straightens with angle of fed documents
Straightens with angle & contents of fed documents

Daily Maintenance

Clean the scanner on a regular basis, as described below, to maintain peak scanning quality.

CAUTION

- When cleaning the scanner and the inside of the scanner, turn OFF the power button and disconnect the power cord from the power outlet.
- Do not use spray cleaners to clean the scanner. Precision mechanisms, such as the light source, may get wet, and cause a malfunction.
- Never use paint thinner, alcohol, or other organic solvents to clean the scanner. The exterior of the scanner may become deformed, discolored, or melted. It may also cause a fire or electric shock.

Cleaning the Scanner

To clean the outside of the scanner, wipe off any dirt with a cloth that has been dampened with water and thoroughly wrung out, and then wipe the scanner dry with a clean dry cloth.

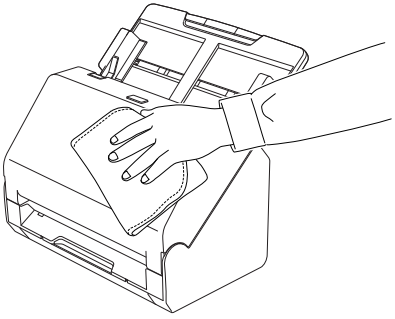

Cleaning the Inside of the Scanner

Dust or paper particles inside the scanner may cause lines or smudges to appear on scanned images. Use compressed air to periodically clean dust and paper particles from the document feed opening and the inside of the scanner. After finishing a large scanning job, turn OFF the scanner and then clean out any paper particles remaining inside the scanner.

Cleaning the Sensor Glass and the Rollers

If scanned images contain streaks, or if the scanned documents become dirty, the sensor glass or rollers inside the scanner may be dirty. Clean them periodically.

1 **Pull the OPEN lever and pull open the front unit toward you.**

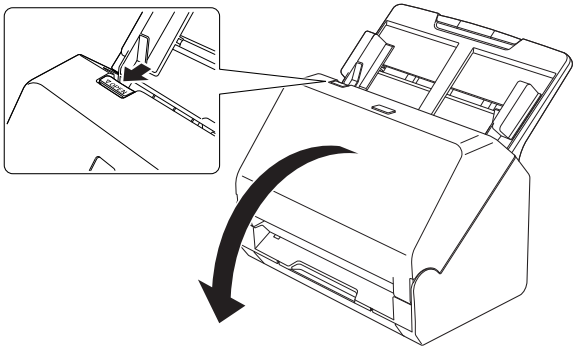

2 **Use compressed air to remove dust and paper particles from the inside of the scanner.**

3 Wipe any dirt off the scanning glass.

Wipe any dirt off the scanning glass with a cloth that has been dampened with water and thoroughly wrung out, and then wipe the glass dry with a clean, dry and soft cloth.

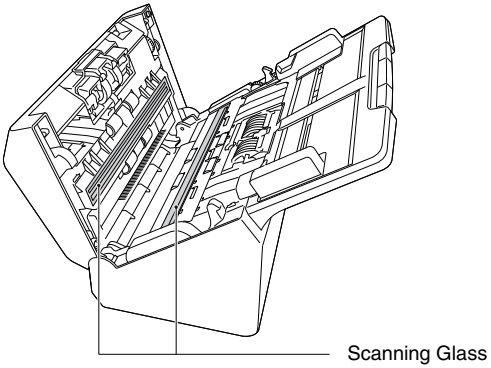

CAUTION

Do not spray water or neutral detergent directly on the scanner. Precision mechanisms, such as the light source, may get wet, and cause a malfunction.

IMPORTANT

- Scratches on the sensor glass may cause marks on the images, as well as feeding errors. If there are scratches on the sensor glass, contact your local authorized Canon dealer or service representative.
- Take care to ensure the anti-static brush in the front unit does not become deformed.

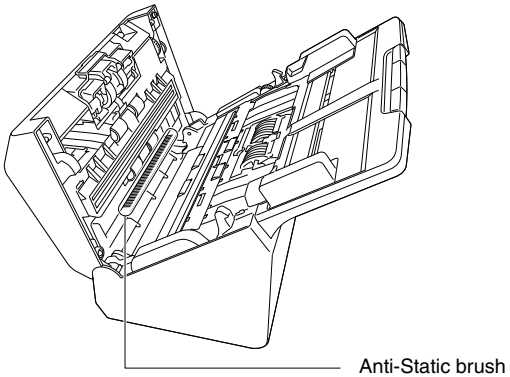

4 Clean the rollers.

Clean the rollers while turning them.

Wipe the rollers with a cloth that has been dampened with water and thoroughly wrung out, and then use a clean, dry and soft cloth to wipe away any moisture.

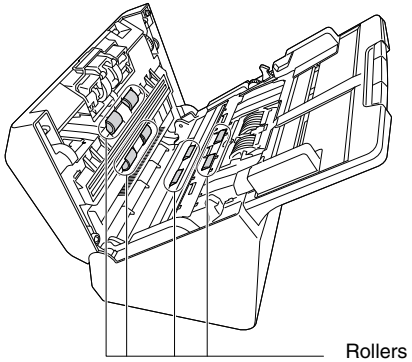

5 **Remove the retard roller and feed roller.** **(See p. 57, p. 58)**

IMPORTANT

Remove the retard roller and feed roller from the scanner to clean them, and be sure to reattach them to the scanner when cleaning is finished.

6 **Wipe the removed rollers with a cloth that has been dampened with water and thoroughly wrung out.**

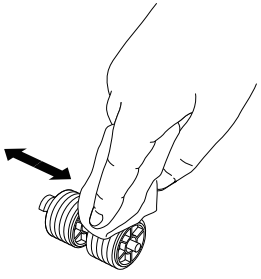

7 **Reattach the retard roller and feeding roller.** **(See p. 57, p. 58)**

8 **Close the front unit by gently pushing it up on both sides until it clicks into place. Make sure that the front unit is completely closed by pushing until you hear a click.**

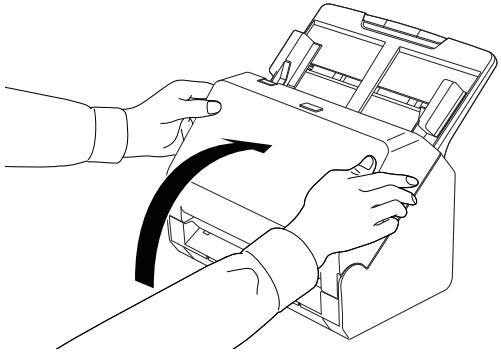

Replacing Consumable Parts

The two rollers (feed roller and retard roller) installed in the scanner are consumable parts. The feed roller and retard roller wear with scanning. If the feed roller and retard roller are worn, documents may not feed correctly and paper jams and double feeds may occur.
When the total number of pages fed by the scanner exceeds the number of pages for the service life of the rollers, a message prompting you to replace the rollers is displayed when the computer is started.
If this message begins to be displayed at startup, purchase an exchange roller kit and replace the worn parts with the consumable parts included in the kit (feed roller and retard roller). See p. 70 for details about the exchange roller kit.
Furthermore, the counter in the scanner that records the number of pages fed also needs to be reset when you replace the rollers. (See p. 59)

Opening and Closing the Front Unit

1 **Pull the OPEN lever and pull open the front unit toward you.**

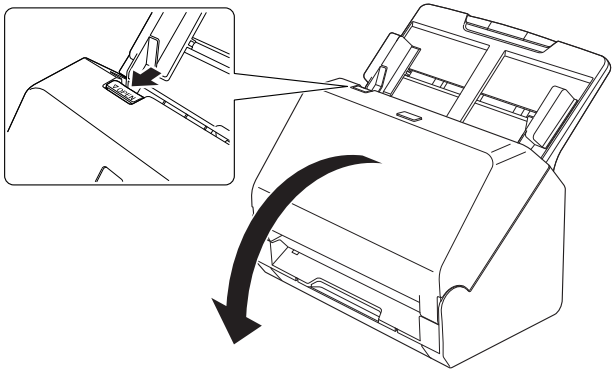

Hint

The location of each of the consumable parts is shown below.

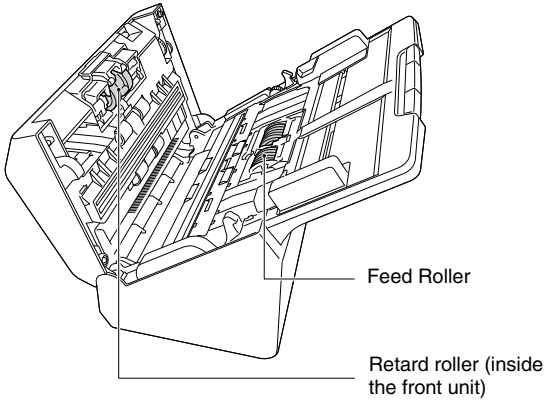

2 **When closing the front unit, make sure that it is completely closed by gently pressing the left and right until you hear a click.**

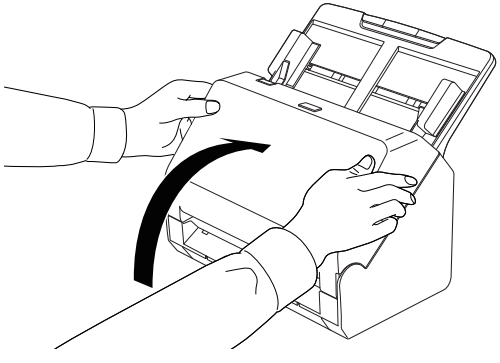

Replacing the Feed Roller

1 **Open the roller cover.**

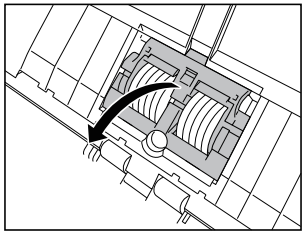

2 **Remove the feed roller.**

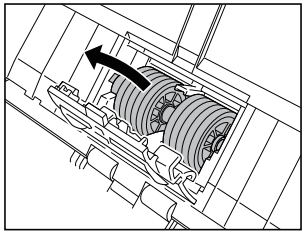

3 **Install the new feed roller.**

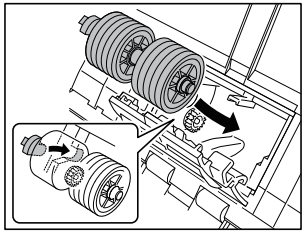

4 **Close the roller cover.**

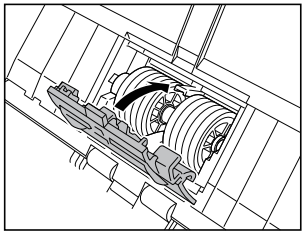

Replacing the Retard Roller

1 **Open the roller cover.**

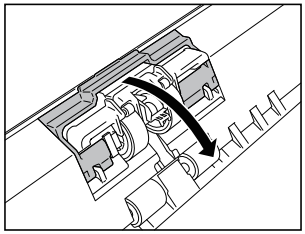

2 **Pull the left lever that secures the retard roller to the scanner, and remove the roller.**

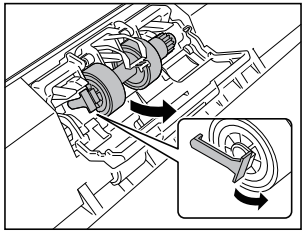

▼

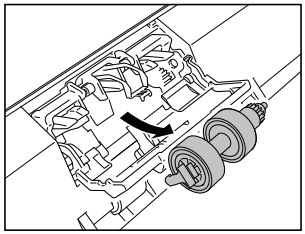

3 **Install the new retard roller by inserting the right side first.**

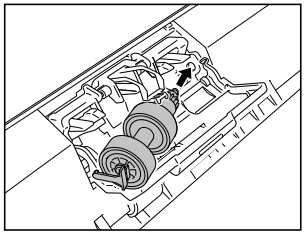

4 **Push the left side of the retard roller to secure it to the scanner.**

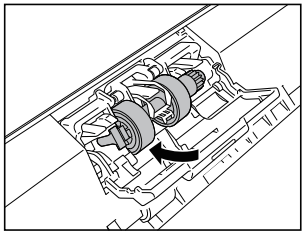

5 **Close the roller cover.**

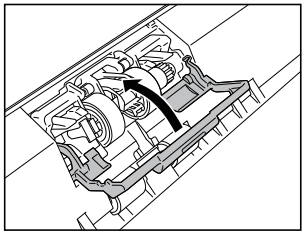

Resetting the counter

Windows

If you click CaptureOnTouch Lite icon on the taskbar and then click [Environmental settings] from the menu, the [Environmental settings] dialog box appears.

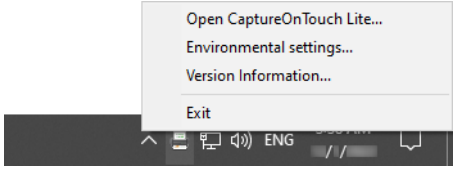

In the [Environmental settings] dialog box, you can configure settings related to CaptureOnTouch Lite operations and perform scanner maintenance.

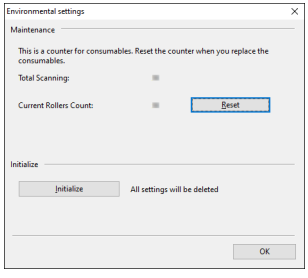

Maintenance

View the total number of pages scanned with the scanner, and view counters for the roller and separation pad. When you replace the roller and separation pad, you can reset the counters here.

Initialize

Return all settings to their default condition.

Mac

Open the [Environmental settings] dialog box to configure settings related to CaptureOnTouch Lite operations.

1 **Start CaptureOnTouch Lite.**

If CaptureOnTouch Lite does not start, double-click [CaptureOnTouch Lite Launcher] in the [CaptureOnTouch Lite for Mac] folder.

If you closed the main window after starting CaptureOnTouch Lite, open it again from the menu bar.

2 **Click [Preferences] in the [CaptureOnTouch Lite] menu.**

The [Environmental settings] dialog box appears.

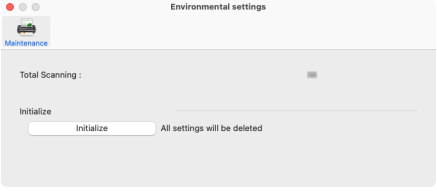

You can configure the following in this dialog box.

[Maintenance] Tab

[Initialize]

Return all settings to their default condition.

Removing the Document Feed Tray

When you will store or otherwise not use the scanner for a long period of time, remove the document feed tray.

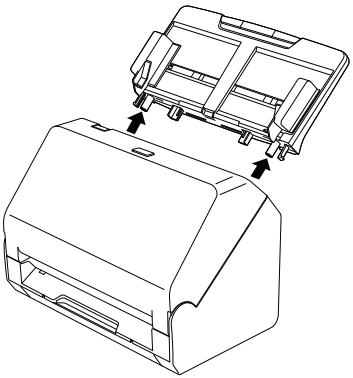

Updating CaptureOnTouch Lite

The update notice screen appears when there is an update for CaptureOnTouch Lite and CaptureOnTouch Lite started while the computer is connected to the Internet.

1 **Click the [Yes] button in the update notice screen.**

The Web browser starts, and downloading of the update file begins.

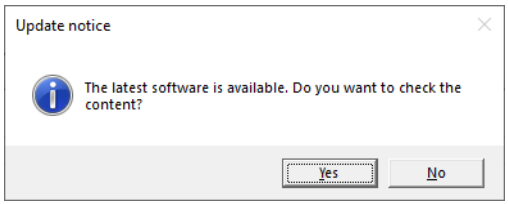

2 **Following the instructions on the screen, install the update.**

Common Problems and Solutions

This section provides recommended solutions to common problems. If you have a problem that is not solved by the following, contact your local authorized Canon dealer.

Problem 1 **The scanner will not turn on.**

Solutions Confirm that the AC adapter is plugged firmly into a power outlet.

Problem 2 **The scanner is not recognized.**

Solutions
(1) Confirm that the scanner is properly connected to the computer with a USB cable.
(2) Confirm that the scanner is turned on. See the previous problem (1) if the scanner does not turn on.
(3) The computer's USB interface may not support the scanner. The scanner cannot be guaranteed to work with all USB interfaces.
(4) Confirm that the supplied USB cable is used to connect the scanner to the computer. The scanner cannot be guaranteed to work with all available USB cables.
(5) If the scanner is connected to the computer via a USB hub, try removing the hub and connecting directly to the computer.
(6) Check the configuration of your security software to see whether access to USB devices is prohibited.

Problem 3 **Documents feed askew (scanned images are slanted).**

Solutions
(1) Align the document guides to fit the documents as closely as possible, and load the documents so that they feed straightly. See "How to Place Documents" on p. 18.
(2) Open the document feed extension support and place the document. See "How to Place Documents" on p. 18.
(3) Set [Automatically straightens skewed images] to other than [OFF] in the scan mode settings.
(4) If many pages have been scanned since roller cleaning, clean the rollers. If documents still feed askew, roller replacement or other maintenance may be needed. See "Maintenance" on p. 53 for roller replacement procedures.

Problem 4 **CaptureOnTouch Lite does not start.**

Solutions If access to USB devices is blocked by security software, you may not be able to use CaptureOnTouch Lite.

Problem 5 **The [ONTOUCH L] screen (Windows) / [CaptureOnTouch Lite for Mac] screen (macOS) of CaptureOnTouch Lite is not displayed.**

Solutions The computer may be configured so that the folder screen is not displayed automatically when a USB device is connected. Check the configuration of your computer.

Problem 6 **If white lines or streaks appear in scanned images.**

Solutions Clean both sides of the scanner glass, and the rollers. If a sticky substance such as glue or correction fluid is found, carefully wipe with just enough pressure to clean the area where the lines appear. If the problem cannot be solved by cleaning, the internal glass may be scratched. Contact your local authorized Canon dealer.

Problem 7 **Pages are missing.**

Solutions When the advanced settings dialog box's [Scanning Side] setting is [Skip Blank Page], documents with very little black may be unintentionally skipped. Decrease the Set the likelihood of skipping blank page value ("When you want to delete the images of the blank pages in two-sided documents" on p. 46) or set the [Scanning Side] to another mode, such as simplex or duplex.
If pages are skipped due to the document double feeding, see "Problem 8 Documents jam (or double-feed)."

Problem 8 **Documents jam (or double-feed).**

Solutions
(1) If the roller has been installed correctly, clean it if necessary.
(2) Proper scanning may not be possible when document pages stick together due to static electricity. Fan the documents before you load them.
(3) Manually feed the scanner one page at a time.

Problem 9 **The scanner detects double-feeding even though the documents are fed properly.**

Solutions The [Detect by Length] option of [Double Feed Detection] may not work properly when scanning a batch of varying size documents. Disable [Detect by Length]. See "Detecting a document double feed" on p. 20.

Problem 10 **Multiple pages of scanned images cannot be saved to a single file.**

Solutions Depending on the file format, multiple scanned image pages cannot be saved as a single file with CaptureOnTouch Lite.

File type	Processing for multiple pages
BMP, JPEG	Scanned images are always saved one page per file.
PPTX	Multi-page images are always saved to a single file.
TIFF, PDF	You can specify whether to save scanned images as multi- or single-page files in the dialog box displayed by clicking the [Detail settings] button of [File type] in the edit screen of the output panel. For the edit screen of the output panel, see "Setting the output" on p. 35.

Problem 11 **All of the placed documents have been scanned, but the scanned image does not appear on the application.**

Solutions When [Automatic Feeding] is selected as the document feeding method on the advanced settings dialog box, scanning will continue even after all documents have been scanned because the scanner is waiting for additional documents. Click the [Cancel] button that appears on the bottom right of the computer screen to finish the operation and send the scanned images to the application.

Problem 12 **Scanning is slowed down.**

Solutions Try scanning again after specifying a lower resolution for [Dots per inch].

Problem 13 Memory becomes insufficient and scanning stops.

Solutions

If you configure scanning conditions that use a large amount of the computer's memory, scanning may stop because of insufficient memory. Although this depends on the computer's memory size, the possibility of insufficient memory increases if any of the following scanning conditions overlap.

- [Color Mode] is set to [24-bit Color]
- A large page size (e.g. Legal) is specified as the [Page Size]. Alternatively, the page size is set to [Scanner's Maximum].
- A high resolution (600dpi etc.) is specified for [Dots per inch].

If an error message appears due to insufficient memory while scanning is in progress, exit the application, change the scanning conditions (e.g. reduce the resolution or page size) and then try scanning again. In addition, the amount of memory used can be contained by turning off [Moire Reduction] and [Prevent Bleed Through/Remove Background] if they are set to on.

Software Troubleshooting

This section describes troubleshooting problems and solutions for operating the supplied software (CaptureOnTouch Lite).

If scanning is too slow

(1) Close other running programs, if any.
(2) Scanning can be slowed down by memory shortage caused by memory-resident applications such as anti-virus programs. Close such memory-resident programs if necessary to free up memory space.
(3) When insufficient hard disk space is available, the scanner may be unable to create the necessary temporary files for scanned data. Delete unneeded data on the hard disk to free up more space.
(4) Scanning is slow if the computer's USB port is not Hi-Speed USB 2.0 compliant.
(5) If using a common USB cable that is not Hi-Speed USB 2.0 compliant, replace the cable with the supplied compliant cable.
(6) When the scanner is connected to the computer via a USB hub that is not Hi-Speed USB 2.0 compliant, remove the hub and connect the scanner directly to the computer.

If scanned image files cannot be opened in an application

(1) Scanned images saved as multi-page TIFF files can be opened only by programs that support this file format.
(2) Images saved as compressed TIFF files (single- as well as multi-page) can only be opened by programs that support the compressed format. This can occur with programs that are not compatible with CaptureOnTouch Lite. In this case, select "None" as the image file compression format before scanning.

There is a display glitch on the UI screen of CaptureOnTouch Lite.

Depending on the computer that you are using, a display glitch may occur on the UI screen when there are too many Scan mode panels, Output panels. Delete any panel that you will not use.

Useful tips

Here are some useful tips for scanning documents.

Where are scanned images saved? Can the save destination be changed?
Images are saved to the following locations, according to program settings. All destination locations can be changed to other folders.
• CaptureOnTouch Lite
Images are saved to the output destination set in the output panel.

How are the scan settings configured?
• CaptureOnTouch Lite
By clicking the Edit button ([ ]) in the [Select document] panel, you can edit the scan settings when the [Select document edit screen] opens.

How do I save multiple pages in one file, or save one file per page?
When scanned images are saved in BMP, PNG, JPEG, or PPTX format, each image is always saved in a separate file.
When scanned images are saved in PDF or TIFF format, you can specify multi- or single-page files. See also “Problem 10” in “Common Problems and Solutions”.

Can I copy or back up scanner setting configurations?
Backup is not possible.

What rules apply to scanned image file names?
• CaptureOnTouch Lite
The file names of scanned images are set based on the settings in the Output panel. Click the Edit button ([ ]) in the Output panel and then set the file name in [File name] in the displayed screen.
If you enable [Use advanced settings dialog box] of [File name] and then click the [Detail Settings] button, the [File name settings] dialog box appears. The scanned image file name is determined by setting some or all of the three items in this dialog box.

Setting	Description
File name	Any specified text string to be included in the file name.
Add date and time	Appends the date and time to file names. Select the date format from the list box. YYYY = year, MM = month, and DD = day of month. The time is appended after the date.
Add counter to file name	Append serial numbers in the order of scanned image saving. Specify the number of digits and starting number.

A sample file name is displayed as the [File name] in the [File name settings] dialog box.

How can I skip blank pages, and scan only non-blank pages?
Specify [Skip Blank Page] in the edit screen or advanced settings dialog box of the scan mode panel, then scan.

How do I scan cards?
Set a card in landscape orientation in the scanner. Specify the same size as the card (or [Auto]), then scan. For details, see p. 19.

How do I load and scan documents with mixed sizes?
Set [Page size] to [Match original size] ([Detect automatically] in the advanced settings dialog box of macOS) in the edit screen or advanced settings dialog box of the scan mode panel, then scan.

What's the best way to scan business cards?
Set [Page size] to [Match original size] ([Detect automatically] in the advanced settings dialog box of macOS) in the edit screen or advanced settings dialog box of the scan mode panel, then scan.

Scanned image edges are lost when scanning while setting [Page Size] to [Match original size] (Windows) or [Detect automatically] (macOS) in the advanced settings dialog box. How can I scan correctly without any loss of edges?

Set the check box of [Trimming] in the [Image processing] tab to OFF (Windows)/Set the check box of the [Trimming] dialog box displayed when you click [More] to OFF (macOS) in the advanced settings dialog box. Alternatively, set [Page size] to [Match original size] ([Detect automatically] in the advanced settings dialog box of macOS) in the edit screen or advanced settings dialog box of the scan mode panel, then scan.

How do I use the automatic document color detection function?

CaptureOnTouch Lite includes a function that automatically detects the color mode from the contents of a document.
The modes that can be detected by this automatic detection function differ depending on the screen for setting the automatic detection function.

Condition	Modes that can be detected
When [Color mode] in the edit screen of the scan mode panel of CaptureOnTouch Lite is set to [Detect automatically]	[Color or Gray]
When [Color mode] for the advanced settings dialog box is set to [Detect automatically] and advanced settings for auto-detection are set	One of the following can be selected: • [Color or Gray] • [Color or Binary] • [Color, Gray or Binary]

Clearing a Paper Jam

When paper jams are detected during scanning, the following scanning is interrupted.

When a paper jam or double feed occurs during scanning, use the following procedures to clear them.

CAUTION

Be careful when removing jammed paper. take care not to cut your hand on the edges of the paper.

1 **Remove any documents that have been left in the feed Tray.**

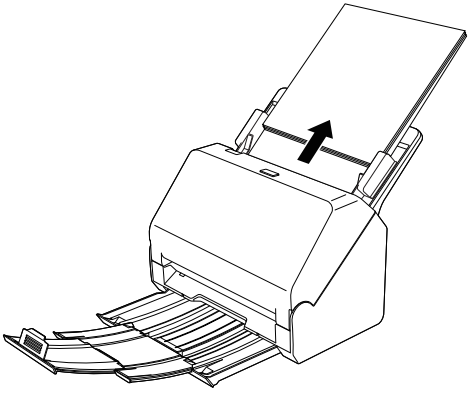

2 **Pull the OPEN lever and pull open the front unit toward you.**

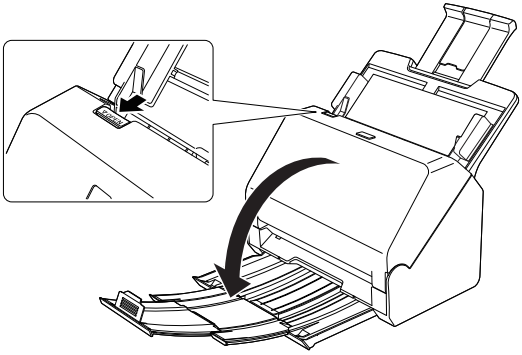

3 **Remove the jammed document.**

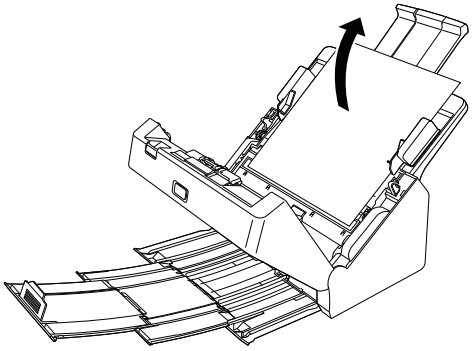

IMPORTANT

Make sure to pull the document out carefully, without applying too much force. If the jammed paper tears while you are pulling it out, make sure to remove any remaining pieces from inside the scanner.

4 **Close the front unit by gently pushing it up on both sides until it clicks into place. Make sure that the front unit is completely closed by pushing until you hear a click.**

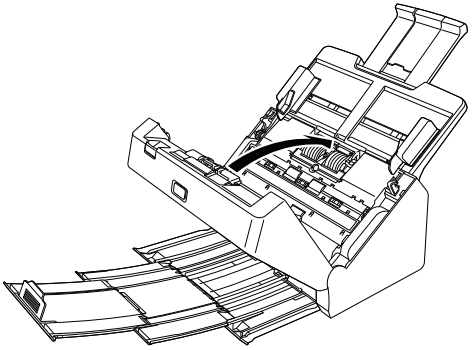

After removing the jammed paper, check to see if the last page was scanned correctly, and then continue scanning.

Hint

When the [Rapid recovery system] check box is enabled in the advanced settings dialog box, you can resume a scanning operation even if it is interrupted by a paper jam by removing the document and resuming from the document that was being fed when the interruption occurred.
As the image of the document that was being fed at the time of the interruption may not be saved in such cases, be sure to verify the last scanned image before resuming the operation.

Specifications

Main Unit

Type: Desktop sheetfed scanner

Scanning Document Size

Plain Paper

Size: Width: 50.8 mm to 216 mm (2" to 8.5")
Length: 54 mm to 356 mm (2.1" to 14")

Paper weight: 27 to 209 g/m^2 (7 to 56 lb bond) 0.04 mm to 0.25 mm (0.00157" to 0.00984")

Loading capacity:
A4 size or smaller: 60 sheets (80g/m^2 (22 lb bond))
Larger than A4 size: 40 sheets (80g/m^2 (22 lb bond))
Make sure stacks do not exceed 6 mm in height for either of the above.

Business Card

Size: 50 mm x 85 mm (1.97" x 3.35") or larger

Paper thickness:
255 g/m^2 (68 lb bond) 0.3 mm (0.0118") or smaller

Card

Size: 54 mm x 86 mm (2.12" x 3.37") (ISO standard)

Card thickness: 1.4 mm (0.055") or smaller

Orientation: Horizontal feeding only

Embossed cards can be scanned.

Loading capacity:
3 cards (non-embossed), 1 card (embossed)

Scanning Sensor: Contact image sensor

Light source: LED

Scanning Side: Simplex/duplex

Scanning modes: Black and White, 256-level Grayscale, Advanced Text Enhancement II, 24-bit Color

Optical Resolution
Maximum 600dpi

Output Resolution
150dpi/200dpi/300dpi/400dpi/600dpi

Scanning Speed (Conditions: Core i7-9700 3.00GHz CPU, 16 GB memory, A4 document size)
up to 25 pages/min

Interface: Hi-Speed USB 2.0

External Dimensions
293 mm (11.54")(W) x 251 mm (9.88") (D) x 245 mm (9.65") (H) (With the feed tray attached and the document eject tray pushed in)
293 mm (11.54")(W) x 600 mm (23.62")(D) x 382 mm (15.04")(H) (With the feed tray attached and the document eject tray pulled out)

Weight (without AC adapter)
Approximately 3.0 kg (6.61 lb)

Power Supply (using AC adapter)
DC16V 0.6A

Power Consumption
Scanning: Maximum 10W
In the Sleep mode: 1.0W
With power switch OFF: Maximum 0.1W

Operating Environment
Temperature: 10°C to 32.5°C (50°F to 90.5°F)
Humidity: 20% to 80% RH

AC Adapter (100 to 240 V type)

Model Number: MG1-5042 (16V)

Input: AC100 to 240V, 50/60 Hz, 0.57 to 0.32 A

Output: DC16V 1.6A

Weight: Approximately 0.2kg (0.44 lb)

Specifications are subject to change without notice due to product improvements.

Replacement parts

Exchange roller kit (product code: 5595C001)

Kit to replace the rollers (feed roller, retard roller).

- For the replacement procedure, see “Replacing Consumable Parts” on p. 56.
- Contact your local authorized Canon dealer or service representative for detailed information about the replacement parts.

Dimensions

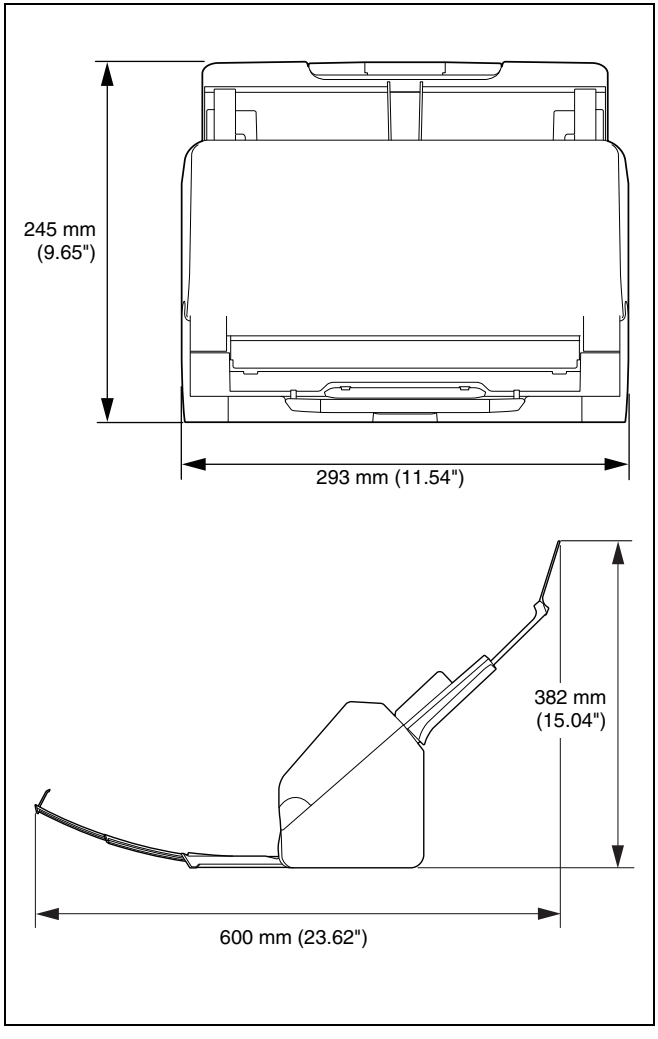

Index

A

Advanced Settings Dialog Box 37
- Basic settings 40
- Settings suitable for intended use 46

C

CaptureOnTouch Lite 22
Card
- Loading method 19

Care and cleaning 53
Counter 59
Custom paper size 40

D

Document 16
- Card 19
- Loading method 18

Double Feed Detection 20

F

Feed roller 56, 57
Front unit 56

P

Paper jam 67
Power supply 14

R

Resetting the counter 59
Retard roller 56, 58
Roller 54
- Cleaning 53
- Replace 56

S

Scanning glass 54
- Cleaning 53

U

Updating 60

Regulations

FCC REGULATIONS (For 120V model)

Document Scanner, Model 6130260

Note: This equipment has been tested and found to comply with the limits for a Class B digital device, pursuant to Part 15 of the FCC Rules. These limits are designed to provide reasonable protection against harmful interference in a residential installation. This equipment generates, uses, and can radiate radio frequency energy and, if not installed and used in accordance with the instructions, may cause harmful interference to radio communications. However, there is no guarantee that interference will not occur in a particular installation. If this equipment does cause harmful interference to radio or television reception, which can be determined by turning the equipment OFF and ON, the user is encouraged to try to correct the interference by one or more of the following measures:

– Reorient or relocate the receiving antenna.
– Increase the separation between the equipment and receiver.
– Connect the equipment into an outlet on a circuit different from that to which the receiver is connected.
– Consult the dealer or an experienced radio/TV technician for help.

Use of shielded cable is required to comply with Class B limits in Subpart B of Part 15 of FCC Rules.

Do not make any changes or modifications to the equipment unless otherwise specified in the manual. If such changes or modifications should be made, you could be required to stop operation of the equipment.

Canon U.S.A. Inc.
ONE CANON PARK, MELVILLE, NY 11747, U.S.A.
Tel. No. 1-800-652-2666

ENERGY STAR® Office Equipment Program

This program is for U.S.A and Canada.
As an ENERGY STAR® Partner, CANON ELECTRONICS INC. has determined that this machine meets the ENERGY STAR® Program guidelines for energy efficiency.

The ENERGY STAR® Office Equipment Program is an international program that promotes energy saving through the use of computers and other office equipment. The program backs the development and dissemination of products with functions that effectively reduce energy consumption. It is an open system in which business proprietors can participate voluntarily. The targeted products are office equipment, such as computers, monitors, printers, fax, machine, copiers, and scanners. The standards and logos are uniform among participating nations.

This model doesn’t provide setting options for power management.

Model Names

The following name may be provided for the safety regulations in each sales region of the Document Scanner.
R30: Model 6130260

Reproduction Warning

This device is designed to be used in a legal manner, in accordance with all applicable laws, including, but not limited to, counterfeit and copyright laws, as well as laws pertaining to national security.
Any person(s) found to have reproduced any of the following materials (regardless of whether such reproduction was intentional or not) for the purpose of misrepresenting such material as the original may be prosecuted in accordance with the applicable laws and regulations.

- Paper money or bank notes (domestic and foreign)
- Postage stamps, revenue stamps, or other similar stamps
- Stock certificates, bond certificates, promissory notes, cheques, or other valuable certificates
- Passports, licenses, or other certificates or documents issued by government officials or agencies

This is not an exhaustive list.
Canon is not responsible for how this scanner is used by an individual. Please note that certain intellectual property is protected by copyright law, and copyrighted items may not be reproduced without the express permission of the copyright holder except for personal or household use under limited circumstances.

Trademarks

- Canon and the Canon logo are registered trademarks, of Canon Inc. in the United States and may also be trademarks or registered trademarks in other countries.
- imageFORMULA is a trademark of CANON ELECTRONICS INC.
- Microsoft, Windows, PowerPoint, and SharePoint are registered trademarks or trademarks of Microsoft Corporation in the United States and other countries.
- Microsoft product screen shot(s) reprinted with permission from Microsoft Corporation.
- macOS is a trademark of Apple Inc., registered in the U.S. and other countries.
- ENERGY STAR® is a registered trademark of the United States Environmental Protection Agency.
- Other product and company names herein may be the trademarks of their respective owners. However, the ™ and ® symbols are not used in this document.

Copyright

Copyright 2022 by CANON ELECTRONICS INC. All rights reserved. No part of this publication may be reproduced or transmitted in any form or by any means, electronic or mechanical, including photocopying and recording, or by any information storage or retrieval system without the prior written permission of CANON ELECTRONICS INC.

Disclaimers

The information in this document is subject to change without notice.

CANON ELECTRONICS INC. MAKES NO WARRANTY OF ANY KIND WITH REGARD TO THIS MATERIAL, EITHER EXPRESS OR IMPLIED, EXPECT AS PROVIDED HEREIN, INCLUDING WITHOUT LIMITATION, THEREOF, WARRANTIES AS TO MARKETABILITY, MERCHANTABILITY, FITNESS FOR A PARTICULAR PURPOSE OF USE OR NON-INFRINGEMENT. CANON ELECTRONICS INC. SHALL NOT BE LIABLE FOR ANY DIRECT, INCIDENTAL, OR CONSEQUENTIAL DAMAGES OF ANY NATURE, OR LOSSES OR EXPENSES RESULTING FROM THE USE OF THIS MATERIAL.

CANON ELECTRONICS INC. IS NOT LIABLE FOR THE STORAGE AND HANDLING OF DOCUMENTS SCANNED WITH THIS PRODUCT, OR THE STORAGE AND HANDLING OF RESULTING SCANNED IMAGE DATA.
IF YOU INTEND TO DISCARD THE ORIGINALS OF SCANNED DOCUMENTS, YOU THE CUSTOMER ARE RESPONSIBLE FOR INSPECTING THE SCANNED IMAGES AND VERIFYING THAT DATA IS INTACT.
THE MAXIMUM LIABILITY OF CANON ELECTRONICS INC. UNDER THIS WARRANTY IS LIMITED TO THE PURCHASE PRICE OF THE PRODUCT COVERED BY THE WARRANTY.

WEEE CAUTION

English

Only for European Union and EEA (Norway, Iceland and Liechtenstein)

This symbol indicates that this product is not to be disposed of with your household waste, according to the WEEE Directive (2012/19/EU) and national legislation. This product should be handed over to a designated collection point, e.g., on an authorized one-for-one basis when you buy a new similar product or to an authorized collection site for recycling waste electrical and electronic equipment (EEE). Improper handling of this type of waste could have a possible negative impact on the environment and human health due to potentially hazardous substances that are generally associated with EEE. At the same time, your cooperation in the correct disposal of this product will contribute to the effective usage of natural resources. For more information about where you can drop off your waste equipment for recycling, please contact your local city office, waste authority, approved WEEE scheme or your household waste disposal service. For more information regarding return and recycling of WEEE products, please visit www.canon-europe.com/sustainability/approach/.

Only for the United Kingdom

This symbol indicates that this product is not to be disposed of with your household waste, according to the UK Waste Electrical and Electronic Equipment Regulations. This product should be handed over to a designated collection point, e.g., on an authorized one-for-one basis when you buy a new similar product or to an authorized collection site for recycling waste electrical and electronic equipment (EEE). Improper handling of this type of waste could have a possible negative impact on the environment and human health due to potentially hazardous substances that are generally associated with EEE. At the same time, your cooperation in the correct disposal of this product will contribute to the effective usage of natural resources. For more information about where you can drop off your waste equipment for recycling, please contact your local city office, waste authority, approved WEEE scheme or your household waste disposal service. For more information regarding return and recycling of WEEE products, please visit www.canon-europe.com/sustainability/approach/.

Français

Union Européenne, Norvège, Islande et Liechtenstein uniquement.

Ce symbole indique que ce produit ne doit pas être jeté avec les ordures ménagères, conformément à la directive DEEE (2012/19/UE) et à la réglementation de votre pays. Ce produit doit être confié au distributeur à chaque fois que vous achetez un produit neuf similaire, ou à un point de collecte mis en place par les collectivités locales pour le recyclage des Déchets des Équipements Électriques et Électroniques (DEEE). Le traitement inapproprié de ce type de déchet risque d'avoir des répercussions sur l'environnement et la santé humaine, du fait de la présence de substances potentiellement dangereuses généralement associées aux équipements électriques et électroniques. Parallèlement, votre entière coopération dans le cadre de la mise au rebut correcte de ce produit favorisera une meilleure utilisation des ressources naturelles. Pour plus d'informations sur les points de collecte des équipements à recycler, contactez vos services municipaux, les autorités locales compétentes, le plan DEEE approuvé ou le service d'enlèvement des

ordures ménagères. Pour plus d'informations sur le retour et le recyclage des produits DEEE, consultez le site: www.canon-europe.com/sustainability/approach/.

Deutsch

Nur für Europäische Union und EWR (Norwegen, Island und Liechtenstein)

Dieses Symbol weist darauf hin, dass dieses Produkt gemäß der EU-Richtlinie über Elektro- und Elektronik-Altgeräte (2012/19/EU) und nationalen Gesetzen nicht über den Hausmüll entsorgt werden darf. Dieses Produkt muss bei einer dafür vorgesehenen Sammelstelle abgegeben werden. Dies kann z. B. durch Rückgabe beim Kauf eines ähnlichen Produkts oder durch Abgabe bei einer autorisierten Sammelstelle für die Wiederaufbereitung von Elektro- und Elektronik-Altgeräten geschehen. Der unsachgemäße Umgang mit Altgeräten kann aufgrund potentiell gefährlicher Stoffe, die generell mit Elektro- und Elektronik-Altgeräten in Verbindung stehen, negative Auswirkungen auf die Umwelt und die menschliche Gesundheit haben. Durch die umweltgerechte Entsorgung dieses Produkts tragen Sie außerdem zu einer effektiven Nutzung natürlicher Ressourcen bei. Informationen zu Sammelstellen für Altgeräte erhalten Sie bei Ihrer Stadtverwaltung, dem öffentlich-rechtlichen Entsorgungsträger, einer autorisierten Stelle für die Entsorgung von Elektro- und Elektronik-Altgeräten oder Ihrem örtlichen Entsorgungsunternehmen. Weitere Informationen zur Rückgabe und Entsorgung von Elektro- und Elektronik-Altgeräten finden Sie unter www.canon-europe.com/sustainability/approach/.

Zusatzinformationen für Deutschland:

Dieses Produkt kann durch Rückgabe an den Händler unter den in der Verordnung des Elektro- und Elektronikgerätegesetzes beschriebenen Bedingungen abgegeben werden.
Als Endbenutzer und Besitzer von Elektro- oder Elektronikgeräten sind Sie verpflichtet:

- diese einer vom unsortierten Siedlungsabfall getrennten Erfassung zuzuführen,
- Altbatterien und Altakkumulatoren, die nicht von Altgerät umschlossen sind, sowie Lampen, die zerstörungsfrei aus dem Altgerät entnommen werden können, vor der Abgabe an einer Erfassungsstelle vom Altgerät zerstörungsfrei zu trennen,
- personenbezogener Daten auf den Altgeräten vor der Entsorgung zu löschen.

Die Bedeutung von dem Symbol der durchgestrichenen Abfalltonne auf Rädern finden Sie oben in dieser Beschreibung.
Die Vertreiber von Elektro- oder Elektronikgeräten haben die Pflicht zur unentgeltlichen Rücknahme von Altgeräten. Die Vertreiber haben die Endnutzer über die von ihnen geschaffenen Möglichkeiten der Rückgabe von Altgeräten zu informieren.

Italiano

Solo per Unione Europea e SEE (Norvegia, Islanda e Liechtenstein)

Questo simbolo indica che il prodotto deve essere oggetto di raccolta separata in conformità alla Direttiva RAEE (2012/19/UE) e alla normativa locale vigente. Il prodotto deve essere smaltito presso un centro di raccolta differenziata, un distributore autorizzato che applichi il principio dell'"uno contro uno", ovvero del ritiro della vecchia apparecchiatura elettrica al momento dell'acquisto di una nuova, o un impianto autorizzato al riciclaggio dei rifiuti di apparecchiature elettriche ed elettroniche. La gestione impropria di questo tipo di rifiuti può avere un impatto negativo sull'ambiente e sulla salute umana causato dalle sostanze potenzialmente pericolose che potrebbero essere contenute nelle apparecchiature elettriche ed elettroniche. Un corretto smaltimento di tali prodotti contribuirà inoltre a un uso efficace delle risorse naturali ed eviterà di incorrere nelle sanzioni amministrative di cui all'art. 255 e successivi del Decreto Legislativo n. 152/06. Per ulteriori informazioni sullo smaltimento e il recupero dei Rifiuti di Apparecchiature Elettriche ed Elettroniche, consultare la Direttiva RAEE, rivolgersi alle autorità competenti, oppure visitare il sito www.canon-europe.com/sustainability/approach/.

Español

Sólo para la Unión Europea y el Área Económica Europea (Noruega, Islandia y Liechtenstein)

Este símbolo indica que este producto no debe desecharse con los desperdicios domésticos, de acuerdo con la directiva RAEE (2012/19/UE) y con la legislación nacional. Este producto debe entregarse en uno de los puntos de recogida designados, como por ejemplo, entregándolo en el lugar de venta al comprar un producto similar o depositándolo en un lugar de recogida autorizado para el reciclado de residuos de aparatos eléctricos y electrónicos (RAEE). La manipulación inapropiada de este tipo de desechos podría tener un impacto negativo en el entorno y la salud humana, debido a las sustancias potencialmente peligrosas que normalmente están asociadas con los RAEE. Al mismo tiempo, su cooperación a la hora de desechar correctamente este producto contribuirá a la utilización eficaz de los recursos naturales. Para más información sobre cómo puede eliminar el equipo para su reciclado, póngase en contacto con las autoridades locales, con las autoridades encargadas de los desechos, con un sistema de gestión RAEE autorizado o con el servicio de recogida de basuras doméstico. Si desea más información acerca de la devolución y reciclado de RAEE, visite la web www.canon-europe.com/sustainability/approach/.

Nederlands

Uitsluitend bestemd voor de Europese Unie en EER (Noorwegen, IJsland en Liechtenstein)

Dit symbool geeft aan dat dit product in overeenstemming met de AEEA-richtlijn (2012/19/EU) en de nationale wetgeving niet mag worden afgevoerd met het huishoudelijk afval. Dit product moet worden ingeleverd bij een aangewezen, geautoriseerd inzamelpunt, bijvoorbeeld wanneer u een nieuw gelijksoortig product aanschaft, of bij een geautoriseerd inzamelpunt voor hergebruik van elektrische en elektronische apparatuur (EEA). Een onjuiste afvoer van dit type afval kan leiden tot negatieve effecten op het milieu en de volksgezondheid als gevolg van potentieel gevaarlijke stoffen die veel voorkomen in elektrische en elektronische apparatuur (EEA). Bovendien werkt u door een juiste afvoer van dit product mee aan het effectieve gebruik van natuurlijke hulpbronnen. Voor meer informatie over waar u uw afgedankte apparatuur kunt inleveren voor recycling kunt u contact opnemen met het gemeentehuis in uw woonplaats, de reinigingsdienst, of het afvalverwerkingsbedrijf. U kunt ook het schema voor de afvoer van afgedankte elektrische en elektronische apparatuur (AEEA) raadplegen. Ga voor meer informatie over het inzamelen en recyclen van afgedankte elektrische en elektronische apparatuur naar www.canon-europe.com/sustainability/approach/.

Dansk

Gælder kun i Europæiske Union og EØS (Norge, Island og Liechtenstein)

Dette symbol angiver, at det pågældende produkt ikke må bortskaffes sammen med dagrenovation jf. direktivet om affald af elektrisk og elektronisk udstyr (WEEE) (2012/19/EU) og gældende national lovgivning. Det pågældende produkt skal afleveres på et nærmere specificeret indsamlingssted, f.eks. i overensstemmelse med en godkendt én-til-én-procedure, når du indkøber et nyt tilsvarende produkt, eller produktet skal afleveres på et godkendt indsamlingssted for elektronikaffald. Forkert håndtering af denne type affald kan medføre negative konsekvenser for miljøet og menneskers helbred på grund af de potentielt sundhedsskadelige stoffer, der generelt kan forefindes i elektrisk og elektronisk udstyr. Når du foretager korrekt bortskaffelse af det pågældende produkt, bidrager du til effektiv brug af naturressourcerne. Yderligere oplysninger om, hvor du kan bortskaffe dit elektronikaffald med henblik på genanvendelse, får du hos de kommunale renovationsmyndigheder. Yderligere oplysninger om returnering og genanvendelse af affald af elektrisk og elektronisk udstyr får du ved at besøge www.canon-europe.com/sustainability/approach/.

Norsk

Gjelder kun den europeiske union og EØS (Norge, Island og Liechtenstein)

Dette symbolet indikerer at dette produktet ikke skal kastes sammen med husholdningsavfall, i henhold til WEEE-direktiv (2012/19/EU) og nasjonal lov. Produktet må leveres til et dertil egnet innsamlingspunkt,

det vil si på en autorisert en-til-en-basis når du kjøper et nytt lignende produkt, eller til et autorisert innsamlingssted for resirkulering av avfall fra elektrisk og elektronisk utstyr (EE-utstyr). Feil håndtering av denne typen avfall kan være miljø- og helseskadelig på grunn av potensielt skadelige stoffer som ofte brukes i EE-utstyr. Samtidig bidrar din innsats for korrekt avhending av produktet til effektiv bruk av naturressurser. Du kan få mer informasjon om hvor du kan avhende utrangert utstyr til resirkulering ved å kontakte lokale myndigheter, et godkjent WEEE-program eller husholdningens renovasjonsselskap. Du finner mer informasjon om retur og resirkulering av WEEE-produkter på www.canon-europe.com/sustainability/approach/.

Suomi

Vain Euroopan unionin sekä ETA:n (Norja, Islanti ja Liechtenstein) alueelle.

Tämä tunnus osoittaa, että sähkö- ja elektroniikkalaiteromua koskeva direktiivi (SER-direktiivi, 2012/19/EU) sekä kansallinen lainsäädäntö kieltävät tuotteen hävittämisen talousjätteen mukana. Tuote on vietävä asianmukaiseen keräyspisteeseen, esimerkiksi kodinkoneliikkeeseen uutta vastaavaa tuotetta ostettaessa tai viralliseen sähkö- ja elektroniikkalaiteromun keräyspisteeseen. Sähkö- ja elektroniikkalaiteromun virheellinen käsittely voi vahingoittaa ympäristöä ja ihmisten terveyttä, koska laitteet saattavat sisältää ympäristölle ja terveydelle haitallisia aineita. Lisäksi tuotteen asianmukainen hävittäminen säästää luonnonvaroja. Lisätietoja sähkö- ja elektroniikkalaiteromun keräyspisteistä saat kaupunkien ja kuntien tiedotuksesta, jätehuoltoviranomaisilta, sähkö- ja elektroniikkalaiteromun kierrätysjärjestelmän ylläpitäjältä ja jätehuoltoyhtiöltä. Lisätietoja sähkö- ja elektroniikkalaiteromun keräyksestä ja kierrätyksestä on osoitteessa www.canon-europe.com/sustainability/approach/.

Svenska

Endast för Europeiska unionen och EES (Norge, Island och Liechtenstein)

Den här symbolen visar att produkten enligt WEEE-direktivet (2012/19/EU) och nationell lagstiftning inte får sorteras och slängas som hushållsavfall. Den här produkten ska lämnas in på en därför avsedd insamlingsplats, t.ex. på en återvinningsstation auktoriserad att hantera elektrisk och elektronisk utrustning (EE-utrustning) eller hos handlare som är auktoriserade att byta in varor då nya, motsvarande köps (en mot en). Olämplig hantering av avfall av den här typen kan ha en negativ inverkan på miljön och människors hälsa på grund av de potentiellt farliga ämnen som kan återfinnas i elektrisk och elektronisk utrustning. Din medverkan till en korrekt avfallshantering av den här produkten bidrar dessutom till en effektiv användning av naturresurserna. Kontakta ditt lokala kommunkontor, berörd myndighet, företag för avfallshantering eller ta del av en godkänd WEEE-organisation om du vill ha mer information om var du kan lämna den kasserade produkten för återvinning. För mer information om inlämning och återvinning av WEEE-produkter, se www.canon-europe.com/sustainability/approach/.

Português

Apenas para a União Europeia e AEE (Noruega, Islândia e Liechtenstein)

Este símbolo indica que o produto não deve ser colocado no lixo doméstico, de acordo com a Diretiva REEE (2012/19/UE) e a legislação nacional. Este produto deverá ser colocado num ponto de recolha designado, por exemplo, num local próprio autorizado quando adquirir um produto semelhante novo ou num local de recolha autorizado para reciclar resíduos de equipamentos eléctricos e eletrónicos (EEE). O tratamento inadequado deste tipo de resíduo poderá causar um impacto negativo no ambiente e na saúde humana devido às substâncias potencialmente perigosas normalmente associadas aos equipamentos elétricos e electrónicos. Simultaneamente, a sua cooperação no tratamento correto deste produto contribuirá para a utilização eficaz dos recursos naturais. Para mais informações sobre os locais onde o equipamento poderá

ser reciclado, contacte os serviços locais, a autoridade responsável pelos resíduos, o esquema REEE aprovado ou o serviço de tratamento de lixo doméstico. Para mais informações sobre a devolução e reciclagem de produtos REEE, vá a www.canon-europe.com/sustainability/approach/.

Česká

Pouze Evropská unie a EHP (Norsko, Island a Lichtenštejnsko)

Tento symbol znamená, že podle směrnice o OEEZ (2012/19/EU) a podle vnitrostátních právních předpisů nemá být tento výrobek likvidován s odpadem z domácností. Tento výrobek má být vrácen do sběrného místa, např. v rámci autorizovaného systému odběru jednoho výrobku za jeden nově prodaný podobný výrobek nebo v autorizovaném sběrném místě pro recyklaci odpadních elektrických a elektronických zařízení (OEEZ). Nevhodné nakládání s tímto druhem odpadu by mohlo mít negativní dopad na životní prostředí a lidské zdraví, protože elektrická a elektronická zařízení zpravidla obsahují potenciálně nebezpečné látky. Vaše spolupráce na správné likvidaci tohoto výrobku současně napomůže efektivnímu využívání přírodních zdrojů. Další informace o místech sběru vašeho odpadního zařízení k recyklaci vám sdělí místní úřad vaší obce, správní orgán vykonávající dozor nad likvidací odpadu, sběrny OEEZ nebo služba pro odvoz komunálního odpadu. Další informace týkající se vracení a recyklace OEEZ naleznete na adrese www.canon-europe.com/sustainability/approach/.

Ελληνικά

Μόνο για την Ευρωπαϊκή Ένωση και τον ΕΟΧ (Νορβηγία, Ισλανδία και Λιχτενστάιν)

Αυτό το σύμβολο υποδηλώνει ότι αυτό το προϊόν δεν πρέπει να απορρίπτεται μαζί με τα οικιακά απορρίμματα, σύμφωνα με την Οδηγία σχετικά με τα Απόβλητα Ηλεκτρικού και Ηλεκτρονικού Εξοπλισμού (ΑΗΗΕ) (2012/19/ΕΕ) και την εθνική σας νομοθεσία. Αυτό το προϊόν πρέπει να παραδίδεται σε καθορισμένο σημείο συλλογής, π.χ. σε μια εξουσιοδοτημένη βάση ανταλλαγής όταν αγοράζετε ένα νέο παρόμοιο προϊόν ή σε μια εξουσιοδοτημένη θέση συλλογής για την ανακύκλωση των αποβλήτων Ηλεκτρικού και Ηλεκτρονικού Εξοπλισμού (ΗΗΕ). Ο ακατάλληλος χειρισμός αυτού του τύπου αποβλήτων μπορεί να έχει αρνητικό αντίκτυπο στο περιβάλλον και την υγεία του ανθρώπου, λόγω δυνητικώς επικίνδυνων ουσιών που γενικά συνδέονται με τον ΗΗΕ. Ταυτόχρονα, η συνεργασία σας όσον αφορά τη σωστή απόρριψη αυτού του προϊόντος θα συμβάλει στην αποτελεσματική χρήση των φυσικών πόρων. Για περισσότερες πληροφορίες σχετικά με τα σημεία όπου μπορείτε να απορρίψετε τον εξοπλισμό σας για ανακύκλωση, επικοινωνήστε με το τοπικό γραφείο της πόλης σας, την υπηρεσία απορριμμάτων, το εγκεκριμένο σχήμα ΑΗΗΕ ή την υπηρεσία απόρριψης οικιακών αποβλήτων. Για περισσότερες πληροφορίες σχετικά με την επιστροφή και την ανακύκλωση των προϊόντων ΑΗΗΕ, επισκεφθείτε την τοποθεσία www.canon-europe.com/sustainability/approach/.

Polski

Tylko dla krajów Unii Europejskiej oraz EOG (Norwegia, Islandia i Liechtenstein)

Ten symbol oznacza, że zgodnie z dyrektywą WEEE dotyczącą zużytego sprzętu elektrycznego i elektronicznego (2012/19/UE) oraz przepisami lokalnymi nie należy wyrzucać tego produktu razem z odpadami gospodarstwa domowego. Produkt należy przekazać do wyznaczonego punktu gromadzenia odpadów, np. firmie, od której kupowany jest nowy, podobny produkt lub do autoryzowanego punktu gromadzenia zużytego sprzętu elektrycznego i elektronicznego w celu poddania go recyklingowi. Usuwanie tego typu odpadów w nieodpowiedni sposób może mieć negatywny wpływ na otoczenie i zdrowie innych osób ze względu na niebezpieczne substancje stosowane w takim sprzęcie. Jednocześnie pozbycie się zużytego sprzętu w zalecany sposób przyczynia się do właściwego wykorzystania zasobów naturalnych. Aby uzyskać więcej informacji na temat punktów, do których można dostarczyć sprzęt do recyklingu, prosimy skontaktować się z lokalnym urzędem miasta, zakładem utylizacji odpadów, skorzystać z instrukcji zatwierdzonej dyrektywą WEEE lub skontaktować się z przedsiębiorstwem zajmującym się wywozem odpadów domowych. Więcej informacji o zwracaniu i recyklingu zużytego sprzętu elektrycznego i elektronicznego znajduje się w witrynie www.canon-europe.com/sustainability/approach/.

Magyar

Csak az Európai Unió és az EGT (Norvégia, Izland és Liechtenstein) országaiban

Ez a szimbólum azt jelzi, hogy a helyi törvények és a WEEE-irányelv (2012/19/EU) szerint a termék nem kezelhető háztartási hulladékként. A terméket a kijelölt nyilvános gyűjtőpontokon kell leadni, például hasonló cserekészülék vásárlásakor, illetve bármelyik, elektromos és elektronikai berendezésekből származó hulladék (WEEE) átvételére feljogosított gyűjtőponton. Az ilyen jellegű hulladékok a nem megfelelő kezelés esetén a bennük található veszélyes anyagok révén ártalmasak lehetnek a környezetre és az emberek egészségére. Továbbá, a termékből származó hulladék megfelelő kezelésével hozzájárulhat a természetes nyersanyagok hatékonyabb hasznosításához. A berendezésekből származó, újrahasznosítható hulladékok elhelyezésére vonatkozó további tudnivalókért forduljon a helyi önkormányzathoz, a közterület-fenntartó vállalathoz, a háztartási hulladék begyűjtését végző vállalathoz, illetve a hivatalos WEEE-képviselethez. További tudnivalókat a WEEE-termékek visszajuttatásáról és újrahasznosításáról a www.canon-europe.com/sustainability/approach/.

Slovenský

Platí len pre štáty Európskej únie a EHP (Nórsko, Island a Lichtenštajnsko)

Tento symbol znamená, že podľa Smernice 2012/19/EÚ o odpade z elektrických a elektronických zariadení (OEEZ) a podľa platnej legislatívy Slovenskej republiky sa tento produkt nesmie likvidovať spolu s komunálnym odpadom. Produkt je potrebné odovzdať do určenej zberne, napr. prostredníctvom výmeny za kúpu nového podobného produktu, alebo na autorizované zberné miesto, ktoré spracúva odpad z elektrických a elektronických zariadení (EEZ). Nesprávna manipulácia s takýmto typom odpadu môže mať negatívny vplyv na životné prostredie a ľudské zdravie, pretože elektrické a elektronické zariadenia obsahujú potenciálne nebezpečné látky. Spoluprácou na správnej likvidácii produktu prispejete k účinnému využívaniu prírodných zdrojov.

Ďalšie informácie o mieste recyklácie opotrebovaných zariadení získate od miestneho úradu, úradu životného prostredia, zo schváleného plánu OEEZ alebo od spoločnosti, ktorá zaisťuje likvidáciu komunálneho odpadu. Viac informácií nájdete aj na webovej stránke: www.canon-europe.com/sustainability/approach/.

български

Само за Европейския съюз и ЕИП (Норвегия, Исландия и Лихтенщайн)

Този символ показва, че този продукт не трябва да се изхвърля заедно с битовите отпадъци, съгласно Директивата за ИУЕЕО (2012/19/ЕС) и Вашето национално законодателство. Този продукт трябва да бъде предаден в предназначен за целта пункт за събиране, например на база размяна, когато купувате нов подобен продукт, или в одобрен събирателен пункт за рециклиране на излязло от употреба електрическо и електронно оборудване (ИУЕЕО). Неправилното третиране на този тип отпадъци може да доведе до евентуални отрицателни последствия за околната среда и човешкото здраве поради потенциално опасните вещества, които обикновено са свързани с ЕЕО. В същото време Вашето съдействие за правилното изхвърляне на този продукт ще допринесе за ефективното използване на природните ресурси. Повече информация относно местата, където може да предавате излязло от употреба оборудване за рециклиране, може да получите от местните власти, от органа, отговорен за отпадъците и от одобрена система за излязло от употреба ЕЕО или от Вашата местна служба за битови отпадъци. За повече информация относно връщането и рециклирането на продукти от излязло от употреба ЕЕО посетете www.canon-europe.com/sustainability/approach/.

Română

Doar pentru Uniunea Europeană şi EEA (Norvegia, Islanda şi Liechtenstein)

Acest simbol indică faptul că acest produs nu trebuie aruncat o dată cu reziduurile menajere, în conformitate cu Directiva DEEE (Directiva privind deşeurile de echipamente electrice şi electronice) (2012/19/

UE) şi legile naţionale. Acest produs trebuie transportat la un punct de colectare special, de exemplu un centru care preia produsele vechi atunci când achiziţionaţi un produs nou similar, sau la un punct de colectare autorizat pentru reciclarea deşeurilor provenite de la echipamentele electrice şi electronice (EEE). Mânuirea necorespunzătoare a acestor tipuri de deşeuri poate avea un impact negativ asupra mediului înconjurător şi sănătăţii indivizilor, din cauza substanţelor potenţial nocive care sunt în general asociate cu EEE. În acelaşi timp, cooperarea dvs. la reciclarea corectă a acestui produs va contribui la utilizarea efectivă a resurselor naturale. Pentru mai multe informaţii privind locurile de reciclare a deşeurilor provenite de la echipamente, contactaţi biroul primăriei locale, autoritatea responsabilă cu colectarea deşeurilor, schema DEEE aprobată sau serviciul de colectare a deşeurilor menajere. Pentru mai multe informaţii privind returnarea şi reciclarea produselor DEEE, vizitaţi www.canon-europe.com/sustainability/approach/.

Slovenčina

Samo za Evropsko unijo in EGP (Norveška, Islandija in Lihtenštajn)

Ta simbol pomeni, da tega izdelka v skladu z direktivo OEEO (2012/19/EU) in državno zakonodajo ne smete odvreči v gospodinjske odpadke. Ta izdelek morate odložiti na ustrezno zbiralno mesto, na primer pri pooblaščenem prodajalcu, ko kupite podoben nov izdelek ali na zbiralno mesto za recikliranje električne in elektronske opreme. Neprimerno ravnanje s takšnimi odpadki lahko negativno vpliva na okolje in človekovo zdravje zaradi nevarnih snovi, ki so povezane z električno in elektronsko opremo. S pravilno odstranitvijo izdelka hkrati prispevate tudi k učinkoviti porabi naravnih virov. Če želite več informacij o tem, kje lahko odložite odpadno opremo za recikliranje, pokličite občinski urad, komunalno podjetje ali službo, ki skrbi za odstranjevanje odpadkov, ali si oglejte načrt OEEO. Če želite več informacij o vračanju in recikliranju izdelkov v skladu z direktivo OEEO, obiščite www.canon-europe.com/sustainability/approach/.

Hrvatski

Samo za Europsku uniju i EEA (Norveška, Island i Lihtenštajn)

Ovaj simbol pokazuje da se ovaj proizvod ne smije odlagati s komunalnim i ostalim otpadom sukladno WEEE Direktivi (2012/19/EC) i Pravilniku o gospodarenju otpadnim električnim i elektroničkim uređajima i opremom. Ovaj proizvod je potrebno predati ovlaštenom skupljaču EE otpada ili prodavatelju koji je dužan preuzeti otpadni proizvod po sistemu jedan za jedan, ukoliko isti odgovara vrsti te je obavljao primarne funkcije kao i isporučena EE oprema. Nepropisno rukovanje ovom vrstom otpada može imati negativan učinak na okolinu i zdravlje ljudi zbog supstanci koje su potencijalno opasne za zdravlje, a općenito se povezuju s EEE. Istovremeno, vaša će suradnja kroz propisno odlaganje ovog proizvoda doprinijeti efektivnoj uporabi prirodnih resursa. Za više informacija o tome gdje možete odložiti svoj otpad za recikliranje obratite se vašem lokalnom gradskom uredu, komunalnoj službi, odobrenom WEEE programu ili službi za odlaganje kućnog otpada. Ostale informacije o vraćanju i recikliranju WEEE proizvoda potražite na www.canon-europe.com/sustainability/approach/.

Català

Només per a la Unió Europea i a l'Espai Econòmic Europeu (Noruega, Islàndia i Liechtenstein)

Aquest símbol indica que aquest producte no s'ha de llençar a les escombraries de la llar, d'acord amb la Directiva RAEE (2012/19/UE) i la legislació nacional. Aquest producte s'hauria de lliurar en un dels punts de recollida designats, com per exemple, intercanviant-lo un per un en comprar un producte similar o lliurant-lo en un lloc de recollida autoritzat per al reciclatge de residus d'aparells elèctrics i electrònics (AEE). La manipulació inadequada d'aquest tipus de residus podria tenir un impacte negatiu en l'entorn i en la salut humana, a causa de les substàncies potencialment perilloses que normalment estan associades als AEE. Així mateix, la vostra cooperació a l'hora de llençar correctament aquest producte contribuirà a la utilització efectiva dels recursos naturals. Per a més informació sobre els punts on podeu lliurar aquest producte per procedir al seu reciclatge,

adreceu-vos a la vostra oficina municipal, a les autoritats encarregades dels residus, al pla de residus homologat per la RAEE o al servei de recollida de deixalles domèstiques de la vostra localitat. Per a més informació sobre la devolució i el reciclatge de productes RAEE, visiteu www.canon-europe.com/sustainability/approach/.

Eesti

Üksnes Euroopa Liit ja EMP (Norra, Island ja Liechtenstein)

See sümbol näitab, et antud toodet ei tohi vastavalt elektri- ja elektroonikaseadmete jäätmeid käsitlevale direktiivile (2012/19/EL) ning teie riigis kehtivatele õigusaktidele utiliseerida koos olmejäätmetega. Antud toode tuleb anda selleks määratud kogumispunkti, nt müügipunkt, mis on volitatud üks ühe vastu vahetama, kui ostate uue sarnase toote, või elektri- ja elektroonikaseadmete jäätmete ümbertöötlemiseks mõeldud kogumispunkti. Täiendava teabe saamiseks elektri- ja elektroonikaseadmetest tekkinud jäätmete tagastamise ja ümbertöötlemise kohta võtke ühendust kohaliku omavalitsusega, asjakohase valitsusasutusega, asjakohase tootjavastutusorganisatsiooniga või olmejäätmete käitlejaga. Lisateavet leitate ka Interneti-leheküljelt www.canon-europe.com/sustainability/approach/.

Latviešu

Tikai Eiropas Savienībai un EEZ (Norvēģijai, Islandei un Lihtenšteinai)

Šis simbols norāda, ka atbilstoši ES Direktīvai (2012/19/ES) par elektrisko un elektronisko iekārtu atkritumiem (EEIA) un vietējiem tiesību aktiem no šī izstrādājuma nedrīkst atbrīvoties, izmetot to kopā ar sadzīves atkritumiem. Šis izstrādājums ir jānodod piemērotā savākšanas vietā, piemēram, apstiprinātā veikalā, kur iegādājaties līdzīgu jaunu produktu un atstājat veco, vai apstiprinātā vietā izlietotu elektrisko un elektronisko iekārtu pārstrādei. Nepareiza šāda veida atkritumu apsaimniekošana var apdraudēt vidi un cilvēka veselību tādu iespējami bīstamu vielu dēļ, kas parasti ir elektriskajās un elektroniskajās iekārtās. Turklāt jūsu atbalsts pareizā šāda veida atkritumu apsaimniekošanā sekmēs efektīvu dabas resursu izmantošanu. Lai saņemtu pilnīgāku informāciju par vietām, kur izlietoto iekārtu var nodot pārstrādei, sazinieties ar vietējo pašvaldību, atkritumu savākšanas atbildīgo dienestu, pilnvarotu EEIA struktūru vai sadzīves atkritumu apsaimniekošanas iestādi. Lai saņemtu plašāku informāciju par elektrisko un elektronisko iekārtu nodošanu pārstrādei, apmeklējiet tīmekļa vietni www.canon-europe.com/sustainability/approach/.

Lietuvių

Tik Europos Sąjungai ir EEE (Norvegijai, Islandijai ir Lichtenšteinui)

Šis ženklas reiškia, kad gaminio negalima išmesti su buitinėmis atliekomis, kaip yra nustatyta Direktyvoje (2012/19/ES) ir nacionaliniuose teisė aktuose dėl EĮ atliekų tvarkymo. Šį gaminį reikia atiduoti į tam skirtą surinkimo punktą, pvz., pagal patvirtintą keitimo sistemą, kai perkamas panašus gaminys, arba į elektros ir elektroninės įrangos (EĮ) atliekų perdirbimo punktą. Netinkamas tokios rūšies atliekų tvarkymas dėl elektros ir elektroninėje įrangoje esančių pavojingų medžiagų gali pakenkti aplinkai ir žmonių sveikatai. Padėdami užtikrinti tinkamą šio gaminio šalinimo tvarką, kartu prisidėsite prie veiksmingo gamtos išteklių naudojimo. Jei reikia daugiau informacijos, kaip šalinti tokias atliekas, kad jos būtų toliau perdirbamos, kreipkitės į savo miesto valdžios institucijas, atliekų tvarkymo organizacijas, patvirtintų EĮ atliekų sistemų arba jūsų buitinių atliekų tvarkymo įstaigų atstovus. Išsamesnės informacijos apie EĮ atliekų grąžinimo ir perdirbimo tvarką galite rasti apsilankę tinklalapyje www.canon-europe.com/sustainability/approach/.

Srpski

Ovaj simbol označava da ovaj proizvod ne sme da se odlaže sa ostalim kućnim otpadom, u skladu sa WEEE Direktivom (2012/19/EU) i nacionalnim zakonima. Ovaj proizvod treba predati određenom centru za prikupljanje, npr. na osnovi "jedan-za-jedan" kada kupujete sličan novi proizvod, ili ovlašćenom centru za prikupljanje za reciklažu istrošene električne i elektronske opreme (EEE). Nepravilno rukovanje ovom vrstom otpada može da ima moguće negativne posledice po životnu sredinu i ljudsko zdravlje usled potencijalno

opasnih materijala koji se uglavnom vezuju za EEE. U isto vreme, vaša saradnja na ispravnom odlaganju ovog proizvoda će doprineti efikasnom korišćenju prirodnih resursa. Za više informacija o tome gde možete da predate vašu staru opremu radi recikliranje, vas molimo, da kontaktirate lokalne gradske vlasti, komunalne službe, odobreni plan reciklaže ili Gradsku čistoću. Za više informacija o vraćanju i recikliranju WEEE proizvoda, posetite stranicu www.canon-europe.com/sustainability/approach/.

Српски

Ovaj simbol označava da ovaj proizvod ne sme da se odlaže sa ostalim kućnim otpadom, u skladu sa WEEE Direktivom (2012/19/EU) i nacionalnim zakonima. Ovaj proizvod treba predati određenom centru za prikupljanje, npr. na osnovi "staro za novo" kada kupujete sličan novi proizvod, ili ovlašćenom centru za reciklažu istrošene električne i elektronske opreme (EEE). Nepravilno rukovanje ovom vrstom otpada može da ima moguće negativne uticaje po životnu sredinu i ljudsko zdravlje usled potencijalno opasnih materijala koje se uglavnom vezuju za EEE. U isto vreme, vaša saradnja na ispravnom odlaganju ovog proizvoda će doprineti efikasnom korišćenju prirodnih resursa. Za više informacija o tome gde možete da predate vašu staru opremu radi recikliranje, molimo Vas da kontaktirate lokalne gradske vlasti, komunalne službe, odobreni plan reciklaže ili Gradsku čistoću. Za više informacija o vraćanju i recikliranju WEEE proizvoda, posetite stranicu www.canon-europe.com/sustainability/approach/.

CANON ELECTRONICS INC.
3-5-10 SHIBAKOEN, MINATO-KU, TOKYO 105-0011, JAPAN

CANON U.S.A. INC.
ONE CANON PARK, MELVILLE, NY 11747, U.S.A.

CANON CANADA INC.
8000 Mississauga Road Brampton, Ontario L6Y 5Z7, CANADA

CANON EUROPA N.V.
BOVENKERKERWEG 59, 1185 XB AMSTELVEEN, THE NETHERLANDS

CANON AUSTRALIA PTY. LTD.
BUILDING A, THE PARK ESTATE, 5 TALAVERA ROAD, MACQUARIE PARK, NSW 2113, AUSTRALIA

CANON SINGAPORE PTE. LTD.
1 FUSIONOPOLIS PLACE, #14-10, GALAXIS, SINGAPORE 138522

CANON KOREA INC.
607, TEHERAN-RO, GANGNAM-GU, SEOUL, KOREA

CANON INDIA PVT. LTD
7TH FLOOR, TOWER B DLF CYBER TERRACES DLF PHASE III GURGAON - 122002 HARYANA, INDIA

PUB. 6T3-0157-E1.10
© CANON ELECTRONICS INC. 2022