HP LaserJet Pro 4006dw
HP LaserJet Pro 4007dw
HP LaserJet Pro 4008dw

User Guide

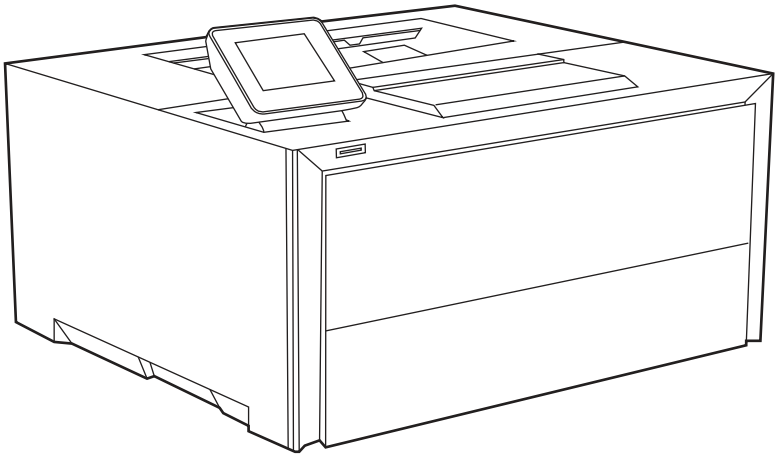

hp.com/support/ljpro4000

HP LaserJet Pro 4006, HP LaserJet Pro 4007, HP LaserJet Pro 4008 - User Guide

SUMMARY

This guide provides configuration, use, warranty, safety and environmental information.

Legal information

Copyright and License

© Copyright 2026 HP Development Company, L.P.

Reproduction, adaptation, or translation without prior written permission is prohibited, except as allowed under the copyright laws.

The information contained herein is subject to change without notice.

The only warranties for HP products and services are set forth in the express warranty statements accompanying such products and services. Nothing herein should be construed as constituting an additional warranty. HP shall not be liable for technical or editorial errors or omissions contained herein.

Edition 2, 08/2026

Trademark Credits

Adobe®, Adobe Photoshop®, Acrobat®, and PostScript® are trademarks of Adobe Systems Incorporated.

Apple and the Apple logo are trademarks of Apple Inc., registered in the U.S. and other countries.

macOS is a trademark of Apple Inc., registered in the U.S. and other countries.

AirPrint is a trademark of Apple Inc., registered in the U.S. and other countries.

Google™ is a trademark of Google Inc.

Microsoft®, Windows®, and Windows Server® are U.S. registered trademarks of Microsoft Corporation.

UNIX® is a registered trademark of The Open Group.

Table of contents

1 Printer overview 1

Warning icons 1

Potential shock hazard 2

Open source license 2

Printer views 3

Printer front view (4006dw, 4007dw, 4008dw) 3

Printer rear view (4006dw, 4007dw, 4008dw) 3

Control panel view (4006dw, 4007dw, 4008dw) 4

Printer specifications 6

Technical specifications 4006, 4007, 4008 (dw models) 6

Supported operating systems 7

Mobile printing solutions 9

Printer dimensions (4006dw, 4007dw, 4008dw) 9

Power consumption, electrical specifications, and acoustic emissions 11

Operating-environment range 11

Printer hardware setup and software installation 11

2 Paper trays 12

Load paper to Tray 1 (multipurpose tray) 13

Load Paper to Tray 1 (multipurpose tray) 13

Tray 1 paper orientation 14

Load paper to Tray 2 17

Load paper to Tray 2 17

Tray 2 paper orientation 18

Load paper to Tray 3 (optional accessory) 20

Load paper to Tray 3 (optional accessory) 20

Tray 3 paper orientation 22

Load and print envelopes 24

Print envelopes 24

Envelope orientation 24

Load and print labels 25

Manually feed labels 25

Label orientation 25

3 Supplies, accessories, and parts 26

Dynamic Security Enabled Printers 26
Order supplies, accessories, and parts 27
Ordering 27
Supplies and accessories 27
Customer self-repair parts 28
Configure the HP toner-cartridge-protection supply settings 29
Introduction 29
Enable or disable the Cartridge Policy feature 29
Enable or disable the Cartridge Protection feature 32
Replace the toner cartridge 36
Toner cartridge information 36
Replace the toner cartridge 37
4 Print 41
Print tasks (Windows) 42
How to print (Windows) 42
Automatically print on both sides (Windows) 42
Manually print on both sides (Windows) 42
Print multiple pages per sheet (Windows) 43
Select the paper type (Windows) 43
Additional print tasks 43
Print tasks (macOS) 45
How to print (macOS) 45
Automatically print on both sides (macOS) 45
Manually print on both sides (macOS) 45
Print multiple pages per sheet (macOS) 46
Select the paper type (macOS) 46
Additional print tasks 47
Store print jobs on the printer to print later or print privately 48
Introduction 48
Requirements for using the job storage feature 48
Set up job storage 48
Disable or enable the job storage feature 49
Create a stored job (Windows) 49
Create a stored job (macOS) 50
Print a stored job 51
Delete a stored job 51
Information sent to printer for Job Accounting purposes 51
Wi-Fi Direct printing (wireless models only) 52
To turn on Wi-Fi Direct 52
Change the printer Wi-Fi Direct name 52
5 Manage the printer 54
Change the printer connection type (Windows) 54
Advanced configuration with HP Embedded Web Server and Printer Home Page (EWS) 55
Open the HP Embedded Web Server (EWS) from a web browser 55
Embedded Web Server menus 56

Configure IP network settings 60
Printer sharing disclaimer 60
View or change network settings 60
Rename the printer on a network 60
Manually configure IPv4 TCP/IP parameters from the control panel 61
Manually configure IPv6 TCP/IP parameters from the control panel 61
Link speed and duplex settings 62
Printer security features 63
Introduction 63
Assign or change the system password using the Embedded Web Server 63
Energy-conservation settings 65
Print with EconoMode 65
Set the Sleep Mode setting 65
Set the Shutdown Mode setting 65
Set the Disable Shutdown setting 66
HP Web Jetadmin 66
Dynamic Security Enabled Printers 66
Update the firmware 68
Method one: Update the firmware using the control panel 68
Method two: Update the firmware using the Embedded Web Server 68
Method three: Update the firmware using the HP Printer Update utility 69
6 Solve problems 70
Customer support 70
Control panel help system 70
Restore the factory-set defaults 71
A “Cartridge is low” or “Cartridge is very low” message displays on the printer control panel 72
Change the “Very Low” settings 72
Order supplies 73
Printer does not pick up paper or misfeeds 74
Introduction 74
The printer does not pick up paper 74
The printer picks up multiple sheets of paper 75
Clear paper jams (4006, 4007, 4008) 78
Paper jam locations 78
Experiencing frequent or recurring paper jams? 78
13.02 jam error in tray 1 79
13.03 jam error in tray 2 81
13.10, 13.11, 13.13 jam error in the output bin (SFP) 85
13.08, 13.09, 13.14, or 13.15 Jam error in the rear door (SFP) 87
13.08, 13.09, Jam error in the fuser area (SFP) 89
13.14, 13.15 jam error in the duplexer 92
Resolving mono print quality problems 95
Introduction 95
Troubleshoot print quality 95

Advanced troubleshooting: Resolve print quality issues using System Health Apps 107

Solve wired network problems 108
Introduction 108
Poor physical connection 108
The computer is using the incorrect IP address for the printer 108
The computer is unable to communicate with the printer 108
The printer is using incorrect link and duplex settings for the network 109
New software programs might be causing compatibility problems 109
The computer or workstation might be set up incorrectly 109
The printer is disabled, or other network settings are incorrect 109

Solve wireless network problems 110
Introduction 110
Wireless connectivity checklist 110
The printer does not print after the wireless configuration completes 110
The printer does not print, and the computer has a third-party firewall installed 111
The wireless connection does not work after moving the wireless router or printer 111
Cannot connect more computers to the wireless printer 111
The wireless printer loses communication when connected to a VPN 111
The network does not appear in the wireless networks list 111
The wireless network is not functioning 112
Perform a wireless network diagnostic test 112
Reduce interference on a wireless network 112

Appendix A Service and support 113

HP limited warranty statement 114
UK, Ireland, and Malta 115
Austria, Belgium, Germany, Luxembourg. and Switzerland 115
Belgium, France, Luxembourg, and Switzerland 116
Italy 118
Spain 118
Denmark 119
Norway 119
Sweden 119
Portugal 120
Greece and Cyprus 120
Hungary 120
Czech Republic 121
Slovakia 121
Poland 121
Bulgaria 122
Romania 122
Belgium and the Netherlands 122
Finland 123
Slovenia 123
Croatia 123
Latvia 124
Lithuania 124
Estonia 124

Limited Warranty Statement for HP Print Cartridges, Imaging Drums, and Imaging Units for use with HP LaserJet Printers, HP Laser Printers and Samsung Branded Laser Printers 125
Long life consumable and maintenance kit limited warranty statement 125
Dynamic Security Enabled Printers 125
HP policy on non-HP supplies 126
HP anticounterfeit Web site 126
Data stored on the toner cartridge 126
End User License Agreement 126
Customer self-repair warranty service 131
Customer support 131
Appendix B Environmental product stewardship program 132
Protecting the environment 132
Battery information 132
Battery Notice for Brazil (for printers with non-removable battery) 133
Battery disposal - California 133
Chemical substances 133
Electronic hardware recycling 133
EPEAT 133
Material restrictions 133
Material Safety Data Sheet (MSDS) 133
Ozone production 133
Paper 134
Paper use 134
Plastics 134
Power consumption 134
HP LaserJet print supplies 134
Toner consumption 135
For more information 135
Brazil hardware recycling information 135
Restriction of Hazardous Substances (China) 136
China SEPA 137
The regulation of the implementation on China energy label for printer, fax, and copier 137
Disposal of waste equipment by users (EU, UK, and India) 137
EU Microplastics 138
Product Power Data per European Union Commission Regulation 2023/826 (EU) 138
India Battery Waste Management (BWM) Rules 138
Restriction on Hazardous Substances (India) 138

Restriction of Hazardous Substances (Taiwan) 139
WEEE (Turkey) 139

Appendix C Regulatory information 140

Regulatory statements 141
Regulatory model identification numbers 141
European Union & United Kingdom Regulatory Notice 141
European Union Consumer Laser Product 141
FCC regulations 142
Canada - Industry Canada ICES-003 Compliance Statement 142
VCCI statement (Japan) 142
Power cord instructions 142
Power cord statement (Japan) 143
Laser safety 143
Laser statement for Finland 143
Nordic Statements (Denmark, Finland, Norway, Sweden) 144
GS statement (Germany) 144
Eurasian Conformity (Armenia, Belarus, Kazakhstan, Kyrgyzstan) 145
Taiwan BSMI USB Port (Walk-up) statement 145
Product Safety Statements 145

Wireless statements 147
Australia 147
Brazil 147
Canada 147
Products with 5 GHz Operation Industry of Canada 147
Exposure to Radio Frequency Radiation (Canada) 147
China CMIIT Wireless Statement 148
European Regulatory Notice 148
European regulatory notice 148
Notice for use in Japan 148
Mexico statement 148
Taiwan statement 148
Taiwan NCC statement 149
Thailand Wireless Statement 149
FCC compliance statement—United States 149

Index 150

1 Printer overview

Review the location of features on the printer, the physical and technical specifications of the printer, and where to locate setup information.

The following information is correct at the time of publication. For current information, see http://www.hp.com/support/ljpro4000

For more information:

HP's all-inclusive help for the printer includes the following information:

- Install and configure
- Learn and use
- Solve problems
- Download software and firmware updates
- Join support forums
- Find warranty and regulatory information

Warning icons

Use caution if you see a warning icon on your HP printer, as indicated in the icon definitions.

Figure 1-1 Caution: Electric shock

Figure 1-2 Caution: Hot surface

Figure 1-3 Caution: Keep body parts away from moving parts

Figure 1-4 Caution: Sharp edge in close proximity

Figure 1-5 **Warning**

Potential shock hazard

Review this important safety information.

- Read and understand these safety statements to avoid an electrical shock hazard.
- Always follow basic safety precautions when using this product to reduce risk of injury from fire or electric shock.
- Read and understand all instructions in the user guide.
- Observe all warnings and instructions marked on the product.
- Use only a grounded electrical outlet when connecting the product to a power source. If you do not know whether the outlet is grounded, check with a qualified electrician.
- Do not touch the contacts on any of the sockets on the product. Replace damaged cords immediately.
- Unplug this product from wall outlets before cleaning.
- Do not install or use this product near water or when you are wet.
- Install the product securely on a stable surface.
- Install the product in a protected location where no one can step on or trip over the power cord.
- Do not place anything on top of the product. (For example, water, small metal or heavy objects, candles, lit cigarettes, etc.).

  This could result in electric shock or fire.

Open source license

Some HP products use open source software.

For information on open source software used in this printer, visit www.hp.com/software/opensource.

Printer views

Identify certain parts of the printer and the control panel.

Printer front view (4006dw, 4007dw, 4008dw)

Identify the parts on the front of the printer.

Figure 1-6 Printer front view

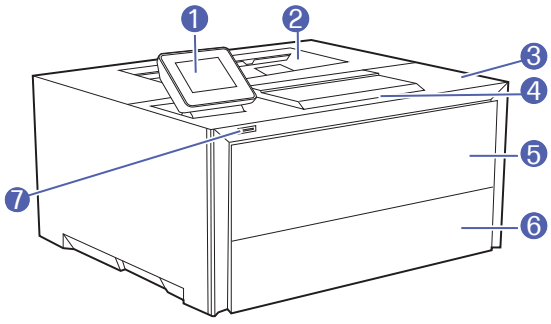

Table 1-1 Printer front components

Number	Description
1	Control panel screen
2	Output bin
3	Toner cartridge access door (Printer PIN location)
4	Output bin extension
5	Tray 1
6	Tray 2
7	Power on/off button

Printer rear view (4006dw, 4007dw, 4008dw)

Identify the parts on the rear of the printer.

Figure 1-7 Printer rear view

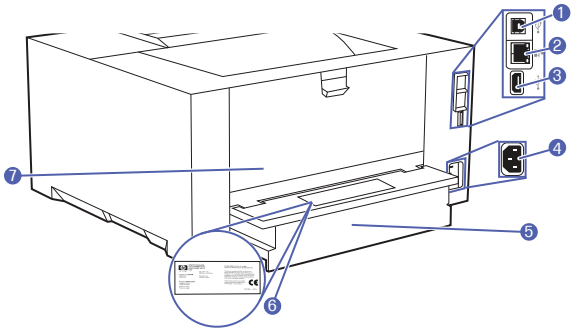

Table 1-2 Printer rear components

Number	Description
1	USB interface port used for connecting the printer via USB
2	Ethernet port
3	USB port (for job storage and private printing)
4	Power connection
5	Tray 2 extends out the rear of printer. **NOTE:** Tray 2 and Tray 3 extend past the rear of the printer when Letter, A4, or Legal paper is loaded.
6	Serial number and product number label
7	Rear door (provides access for clearing jams)

Control panel view (4006dw, 4007dw, 4008dw)

Use the touchscreen control panel to obtain printer and job status information, and to configure the printer.

NOTE: The features that appear on the control panel and the order in which they appear can vary, depending on the printer configuration.

NOTE: While the control panel does not have a standard Cancel button, during many printer processes a Cancel option appears on the control panel. This permits users to cancel a process before the printer completes it.

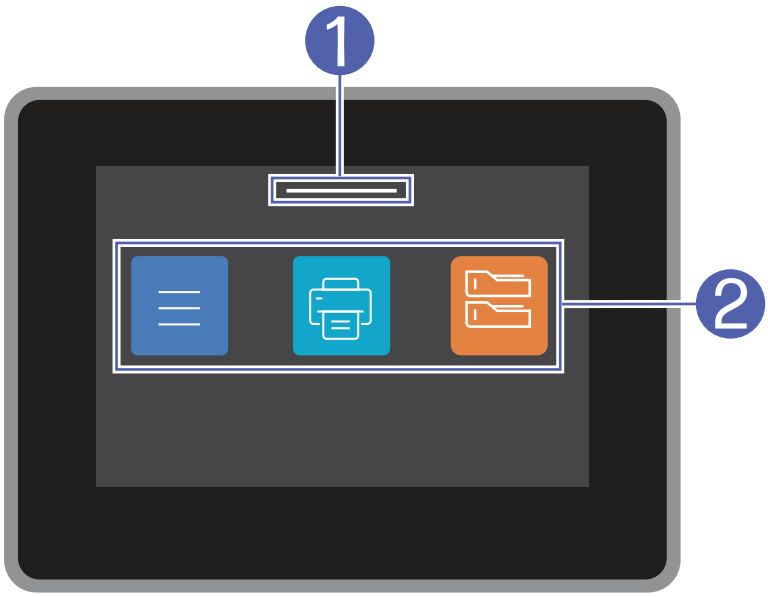

Table 1-3 Function features

Callout	Item	Description
1	**Status Center**	Touch to view the printer status.
2	**Function buttons**	Touch to perform common tasks. Includes the Menu used to open common sub-menus.

How to use the touchscreen control panel

Perform the following actions to use the printer touchscreen control panel.

Table 1-4 Touchscreen control panel actions

Action	Description	Example
Touch 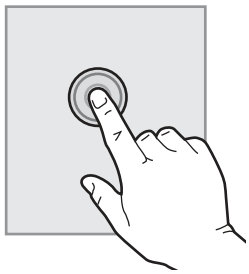	Touch an item on the screen to select that item or open that menu. Also, when scrolling through menus, briefly touch the screen to stop the scrolling.	Touch the Settings icon to open the Settings app.
Swipe 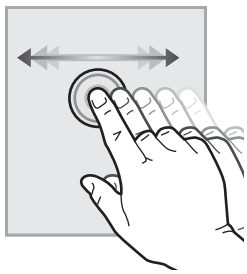	Touch the screen and then move your finger horizontally to scroll the screen sideways.	Swipe until the Settings app displays.
Scroll 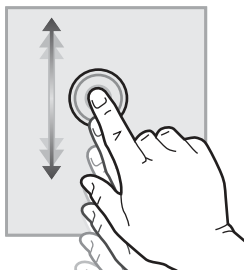	Touch the screen and then move your finger vertically to scroll the screen up and down. When scrolling through menus, briefly touch the screen to stop the scrolling.	Scroll through the Settings app.

Printer specifications

Determine the specifications for your printer model.

Technical specifications 4006, 4007, 4008 (dw models)

See http://www.hp.com/support/ljpro4000 for current information.

Product numbers for each model

- 4006dw - 8X3D6A
- 4007dw - 8X3E0A
- 4008dw - 8X3E7A

Table 1-5 Paper handling specifications

Paper handling features	4006dw	4007dw	4008dw
Tray 1 (100-sheet capacity)	✓	✓	✓
Tray 2 (250-sheet capacity) [1]	✓	✓	✓
Optional 550-sheet accessory tray	Optional	Optional	Optional
Automatic duplex printing	✓	✓	✓

[1] When loaded with **A4 or letter-size paper**, Tray 2 extends from the rear of the printer approximately 54 mm (2.12 in). When loaded with **legal-size paper**, Tray 2 extends from the rear of the printer approximately 110 mm (4.31 in).

Table 1-6 Connectivity specifications

Connectivity features	4006dw	4007dw	4008dw
10/100/1000 Ethernet LAN connection with IPv4 and IPv6	✓	✓	✓
Hi-Speed rear USB 2.0	✓	✓	✓
Built-in dual-band wireless card supporting wi-fi functionality WiFi6 802.11a/b/g/n/ac/ax (2.4 / 5 GHz)	✓	✓	✓

Table 1-7 Print specifications

Print features	4006dw	4007dw	4008dw
Prints up to 47 pages per minute (ppm) on A4 and 45 ppm on letter-sized paper	✓	✓	✓
Job storage and private printing	✓	✓	✓

Table 1-8 Other specifications

Other features	4006dw	4007dw	4008dw
512 MB memory	✓	✓	✓
Color touchscreen control panel	✓	✓	✓

Supported operating systems

The following information applies to the printer-specific Windows and HP print drivers for macOS and to the software installer.

Windows and macOS: Windows and Mac computers and Android and Apple mobile devices are supported with this printer.

1. Go to support.hp.com.
2. Enter the printer name to get the printer drivers.

Linux: For information and print drivers for Linux, go to developers.hp.com/hp-linux-imaging-and-printing.

UNIX: For information and print drivers for UNIX, go to www.hp.com/go/unixmodelscripts.

Citrix Ready Kit Certification - Up to Citrix Server 7.18: For more information, go to citrixready.citrix.com.

Supported operating systems and print drivers

NOTE: HP software and drivers are no longer supported in Windows 7, Windows Server 2008, and Windows Server 2008 R2. For more information, see the following document on HP's support web site:

HP printers - HP software and drivers no longer supported in Windows 7, Windows Server 2008, and Windows Server 2008 R2

Table 1-9 Supported operating systems and print drivers

Operating system	Print driver installed (from the software on the web)
Windows 11 21H2 64-bit and ARM64 Windows 10 22H2 64-bit and ARM64	The PCL 6/PSA printer-specific print driver is available for download from the printer-support website. Download the driver, and then use the Microsoft Add Printer tool to install it.
Windows Server 2025 Windows Server 2022, 64-bit	The PCL 6 printer-specific print driver is available for download from the printer-support website. Download the driver, and then use the Microsoft Add Printer tool to install it.
Windows Server 2019, 64-bit	The PCL 6 printer-specific print driver is available for download from the printer-support website. Download the driver, and then use the Microsoft Add Printer tool to install it.
Windows Server 2016, 64-bit	The PCL 6 printer-specific print driver is available for download from the printer-support website. Download the driver, and then use the Microsoft Add Printer tool to install it.
Windows Server 2012 R2, 64-bit	The PCL 6 printer-specific print driver is available for download from the printer-support website. Download the driver, and then use the Microsoft Add Printer tool to install it.

Table 1-9 Supported operating systems and print drivers (continued)

Operating system	Print driver installed (from the software on the web)
Windows Server 2012, 64-bit	The PCL 6 printer-specific print driver is available for download from the printer-support website. Download the driver, and then use the Microsoft Add Printer tool to install it.
Chrome OS (Chromebook)	Chromebook devices are supported for printing using the HP Smart app, but they are not fully supported for printer setup.
macOS 15 Sequoia, macOS 14 Sonoma, macOS Ventura v13.0	To install the print driver, download HP Easy Start from 123.hp.com. Follow the steps provided to install the printer software and print driver.
HPLIP	The HPLIP solution has an automatic installer available for download from hpLIP and is supported in Linux on the following: **NOTE:** HPLIP support is tested by RCB on the following: Almalinux 9.6, RHEL 9, Ubuntu 22.04, and Ubuntu 24.04. • Almalinux (9.5,9.6) • Boss (5.0) • Debian (7.0, 7.1, 7.2, 7.3, 7.4, 7.5, 7.6, 7.7, 7.8, 7.9, 8.0, 8.1, 8.2, 8.3, 8.4, 8.5, 8.6, 8.7, 8.8, 9.1, 9.2, 9.3, 9.4, 9.5, 9.6, 9.7, 9.8, 9.9, 10.10.1, 10.2, 10.3, 10.4, 10.5, 10.6, 10.7, 10.8, 10.9, 11, 12) • Elementary OS (6, 6.1,7) • Fedora (22, 23, 24, 25, 26, 27, 28, 29, 30, 31, 32, 33, 34, 35, 36, 37, 38, 39, 40) • Linux Mint (17, 17.1, 17.2, 17.3, 18, 18.1, 18.2, 18.3, 19, 19.1,19.2,19.3, 20.04, 20.1, 20.2, 20.3, 21.0, 21.1, 21.3, 22) • Manjaro Linux (17.1.4, 18.0, 18.0.4, 18.1.0, 18.1.2, 19.0, 20.0, 20.2, 21.0, 21.2, 21.3) • MX Linux (21, 21.1, 21.2, 21.3, 23) • Red Hat Enterprise Linux (8.0, 8.2, 8.3, 8.4, 8.5, 8.6, 8.7, 9.0, 9.1) • SUSE Linux (13.2, 42.1, 42.2, 42.3, 15.0, 15.1, 15.2, 15.3, 15.4, 15.5) • Ubuntu (12.04, 14.04, 15.10, 16.04, 16.10, 17.04, 17.10, 18.04,18.10,19.04,19.10, 20.04, 20.10, 21.04, 21.10, 22.04, 22.10, 23.04, 23.10, 24.04) • Zorin (16, 17.1)

NOTE: For a current list of supported operating systems, go to https://support.hp.com for HP's all-inclusive help for the printer.

Minimum system requirements

Table 1-10 Minimum system requirements for Apple®, Windows®, Chromebook, and mobile devices (iOS/Android)

Apple®	Microsoft®	Chromebook	Mobile devices: iOS, Android
• **Operating systems**: – macOS 15 Sequoia – macOS 14 Sonoma – macOS 13 Ventura • **Hard drive**: 2 GB hard drive • **Connectivity**: – Internet connection – USB port	• **Operating systems**: – Windows® 11, 64-bit – Windows® 10, 64-bit • **Hard drive**: 2 GB hard drive • **Connectivity**: – Internet connection – USB port	• **Operating systems**: Chrome OS® • **CPU**: Pentium 4 processor • **Hard drive**: 100 MB hard drive • **RAM**: 128 MB RAM	**Operating systems**: • iOS • Android

Table 1-11 Minimum system requirements for Android, Linux, and SAP

Android	Linux	SAP
• Citrix XenApp & XenDesktop 2303 (OSV) • Fedora 31, 32 ,33, 34, 35 • Harmony	Linux Mint 20.1, 20.2	Ubuntu 20.04, 20.10, 21.04, 21.10

Mobile printing solutions

HP offers multiple mobile printing solutions to enable easy printing to an HP printer from a laptop, tablet, smartphone, or other mobile device.

To see the full list of mobile printing options available for your printer, go to *Printers that can use mobile printing solutions*.

NOTE: Update the printer firmware to ensure all mobile printing capabilities are supported.

- Wi-Fi Direct on wireless models
- AirPrint
- Android Printing
- HP Smart app

Printer dimensions (4006dw, 4007dw, 4008dw)

Make sure your printer environment is large enough to accommodate the printer.

Figure 1-8 **Dimensions**

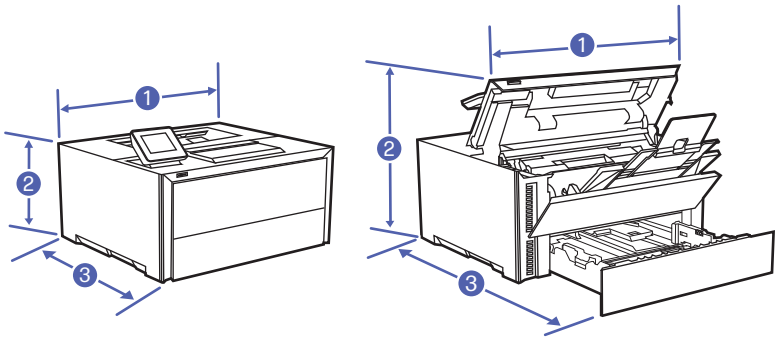

Table 1-12 **Dimensions for the printer 4006dw, 4007dw, 4008dw**

Measurement	Printer fully closed	Printer fully opened
1. Width	369 mm (14.5 in)	369 mm (14.5 in)
2. Height	204 mm (8 in)	302 mm (11.9 in)
3. Depth (mm) Ltr/A4	375 mm (14.7 in)	557 mm (21.9 in)
3. Depth (mm) Legal	435 mm (17.1 in)	557 mm (21.9 in)
Weight (with cartridges)	7.7 kg (17 lb)	7.7 kg (17 lb)

Figure 1-9 **Dimensions for the printer with the optional 550-sheet tray**

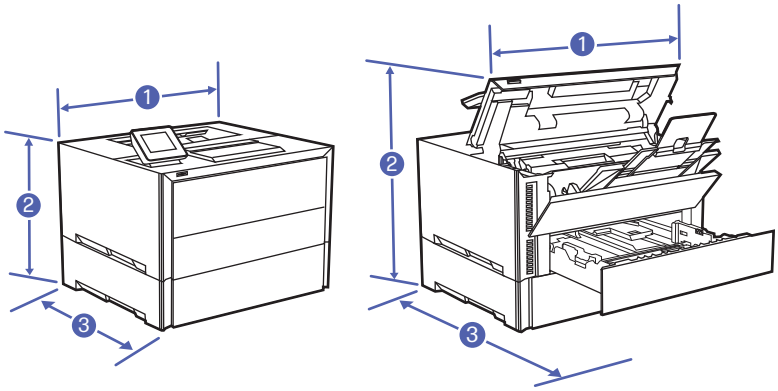

Table 1-13 **Dimensions for the printer with the optional 550-sheet tray**

Measurement	Printer fully closed	Printer fully opened
1. Width	369 mm (14.5 in)	369 mm (14.5 in)
2. Height	334 mm (13.1 in)	432 mm (17.1 in)
3. Depth (mm) Ltr/A4	375 mm (14.7 in)	606 mm (23.9 in)
3. Depth (mm) Legal	435 mm (17.1 in)	606 mm (23.9 in)
Weight (with cartridges)	11.2 kg (24.7 lb)	11.2 kg (24.7 lb)

Power consumption, electrical specifications, and acoustic emissions

In order to operate properly, the printer must be in an environment that meets certain power specifications.

See hp.com/support/ljpro4000 for current information.

⚠ **CAUTION:** Power requirements are based on the country/region where the printer is sold. Do not convert operating voltages. This will damage the printer and void the printer warranty.

Operating-environment range

In order to operate properly, the printer must be in an environment that meets certain specifications.

Table 1-14 Operating-environment specifications

Environment	Recommended	Storage
Temperature	15° to 27°C (59° to 80.6°F)	10° to 32.5°C (50° to 90.5°F)
Relative humidity	30% to 70% relative humidity (RH)	10% to 80% RH

Printer hardware setup and software installation

For basic setup instructions, see the Hardware Installation Guide that came with the printer. For additional instructions, go to HP support on the web.

Go to http://www.hp.com/support/ljpro4000 for HP's all-inclusive help for the printer, which includes the following information:

- Install and configure
- Learn and use
- Solve problems
- Download software and firmware updates
- Join support forums
- Find warranty and regulatory information
- Find instructions about how to use the Microsoft Add Printer tool

2 Paper trays

Discover how to load and use the paper trays, including how to load special items such as envelopes and labels.

The following information is correct at the time of publication. For current information, see http://www.hp.com/support/ljpro4000.

For more information:

HP's all-inclusive help for the printer includes the following information:

- Install and configure
- Learn and use
- Solve problems
- Download software and firmware updates
- Join support forums
- Find warranty and regulatory information

Use caution when loading the paper trays.

⚠ **CAUTION:** Do not extend more than one paper tray at a time.

Do not use paper tray as a step.

All trays must be closed while relocating/moving product.

Keep hands out of paper trays or drawers when closing.

If the printer has a keyboard, close keyboard tray when not in use.

Load paper to Tray 1 (multipurpose tray)

The following information describes how to load paper into Tray 1.

Load Paper to Tray 1 (multipurpose tray)

Follow these steps to load paper in Tray 1.

This tray holds up to 50 sheets of 75 grams per square meter (20 lb) paper.

⚠ **CAUTION:** To avoid jams, never add or remove paper from Tray 1 during printing.

1. Open Tray 1 by grasping the sides of the tray and pulling down.

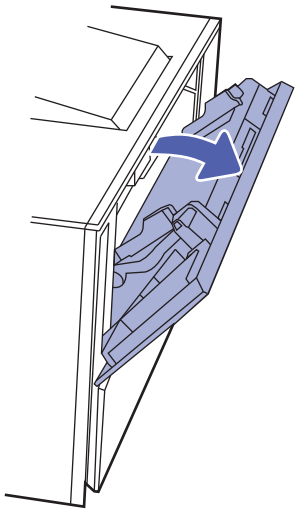

2. Slide out the tray extension.

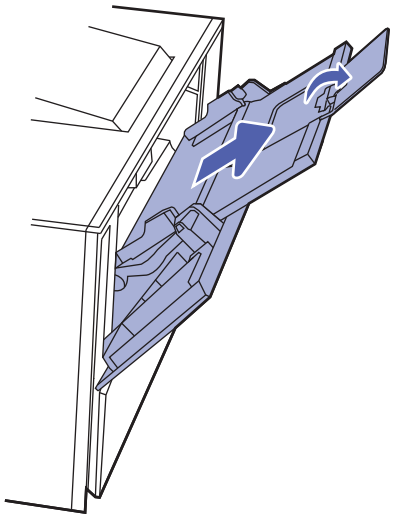

3. Press down on the tab on the right paper guide, and then spread the paper guides to the correct size.

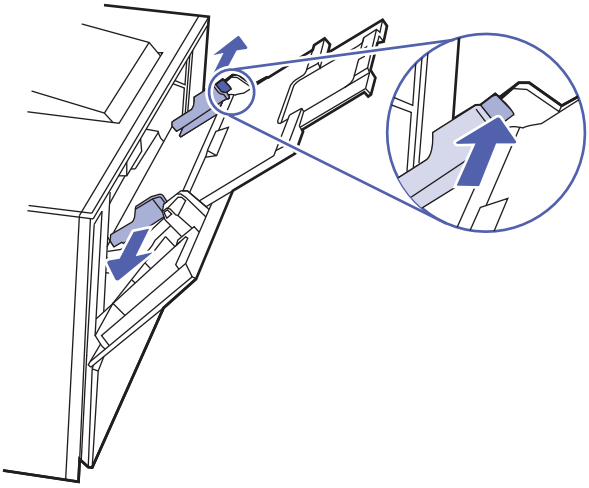

4. Set guides to paper size being loaded.

5. Load plain white paper into the input tray. Make sure that the paper fits under the tabs and below the maximum height indicators.

   For information on how to orient the paper, see Tray 1 paper orientation on page 14.

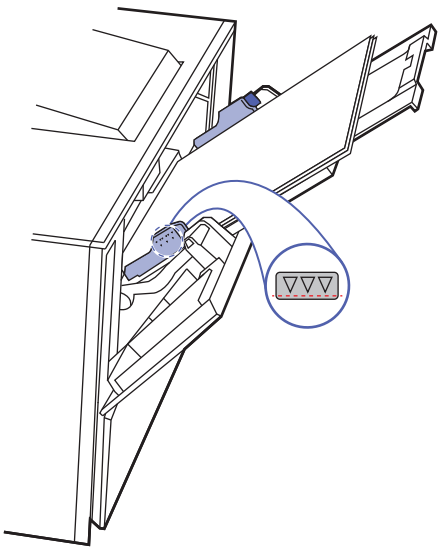

6. At your computer or mobile device, begin the printing process from the application. Make sure the driver is set to the correct paper type and size for the paper being printed from the tray.

Tray 1 paper orientation

When using paper that requires a specific orientation, load it according to the information in the following table.

Table 2-1 Tray 1 paper orientation

Paper type	Output	How to load paper
Letterhead or pre-printed	1-sided printing	Face-up Top edge leading into the printer 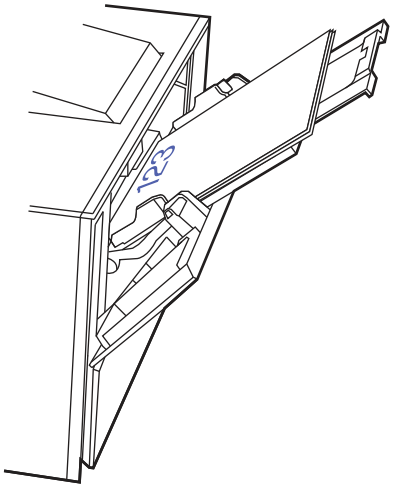
Letterhead or pre-printed	Two-sided printing	Face-down Top edge away from the printer 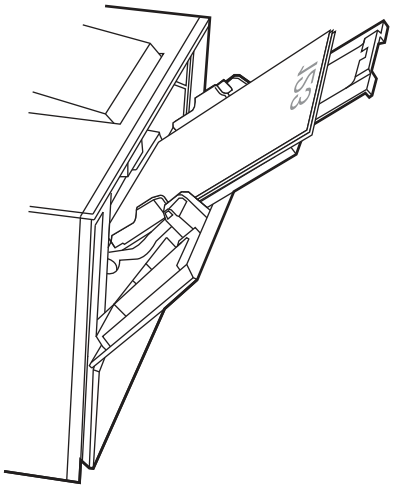

Table 2-1 Tray 1 paper orientation (continued)

Paper type	Output	How to load paper
Prepunched	1-sided or two-sided printing	Face-up Holes toward the left side of the printer 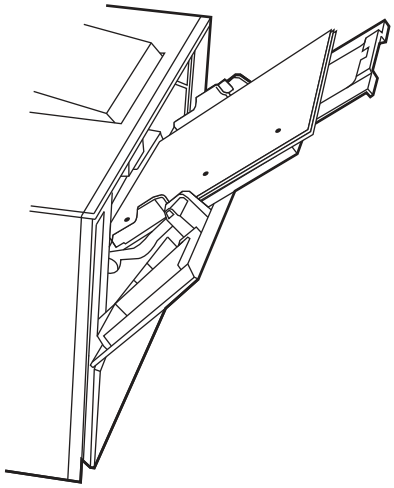

Load paper to Tray 2

Review the following information about loading paper to Tray 2.

Load paper to Tray 2

Follow these steps to load the paper in Tray 2.

This tray holds up to 250 sheets of 75 grams per square meter (20 lb) paper.

1. Open Tray 2.

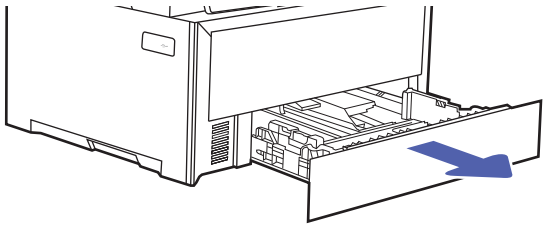

2. Adjust the Paper-width guides by squeezing the adjustment latches on the guides. Slide the guides to the size of the paper being used.

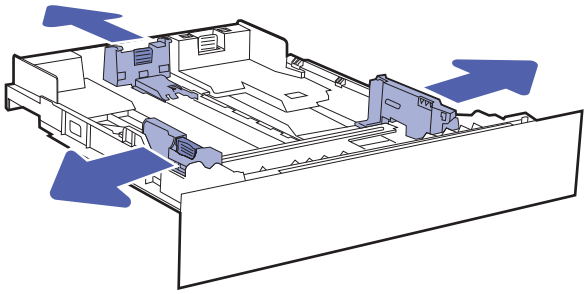

3. To load legal-size paper, extend the tray by squeezing the rear latch and pulling the front of the tray.

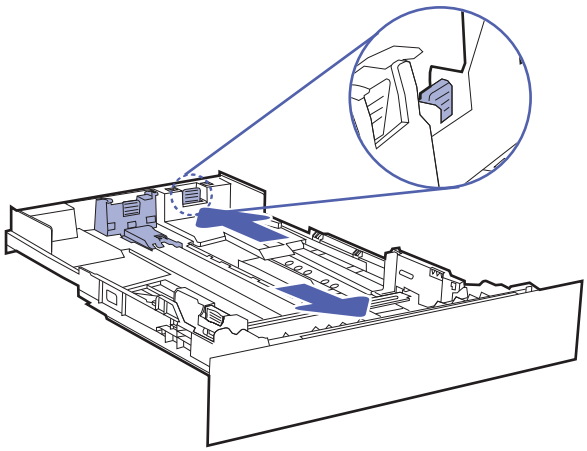

NOTE: When loaded with A4 or letter-size paper, Tray 2 extends from the rear of the printer approximately 54 mm (2.12 in).

When loaded with legal-size paper, Tray 2 extends from the rear of the printer approximately 110 mm (4.31 in).

4. Make sure that the paper guides are set to the correct size paper, then load the paper into the tray.

   For information about how to orient the paper, see Tray 2 paper orientation on page 18.

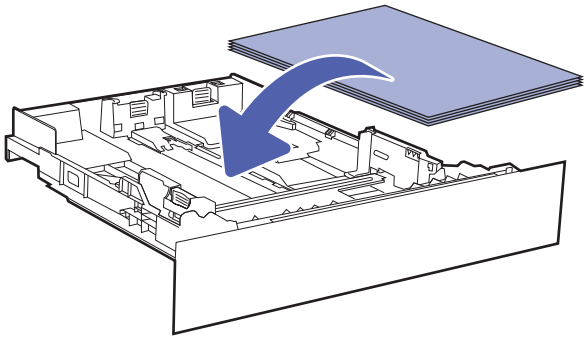

5. Make sure that the paper stack is flat at all four corners and below the paper fill line.

NOTE: To prevent jams, do not overfill the tray. Be sure that the top of the stack is below the tray full indicator.

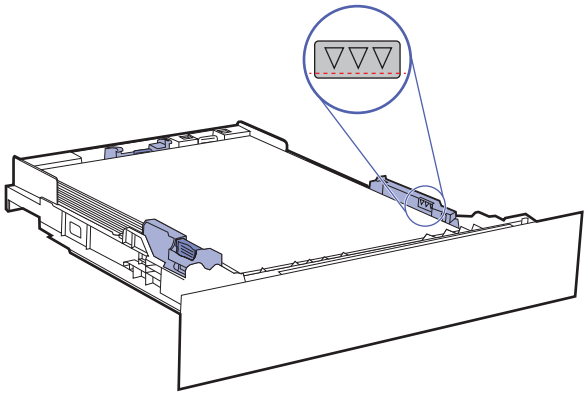

6. After making sure that the paper stack is below the tray full indicator, close the tray.

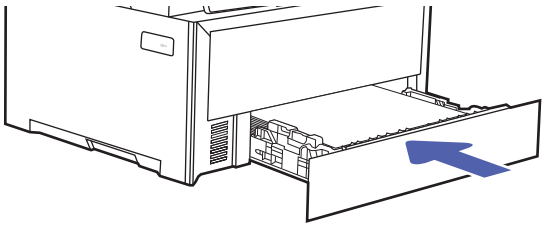

7. At your computer or mobile device, begin the printing process from the application. Make sure the driver is set to the correct paper type and size for the paper being printed from the tray.

Tray 2 paper orientation

When using a paper that requires a specific orientation, load it according to the information in the following table.

Table 2-2 Tray 2 paper orientation

Paper type	Output	How to load paper
Letterhead or pre-printed	1-sided printing	**Face-down** Top edge away from the printer. 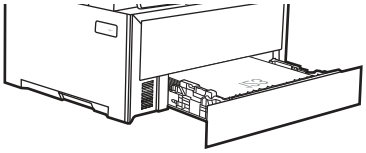
Letterhead or pre-printed	2-sided printing	**Face-up** Top edge toward the printer 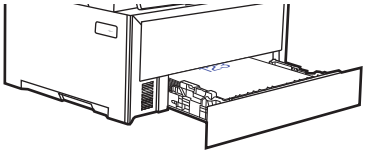
Pre-punched	1-sided printing or 2-sided printing	**Face-up** Holes toward the left side of the printer 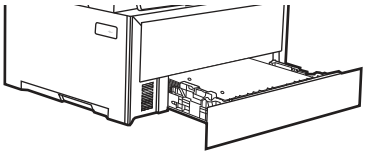

Load paper to Tray 3 (optional accessory)

Review the following information about loading paper.

Load paper to Tray 3 (optional accessory)

Follow these steps to load the paper in Tray 3.

This tray holds up to 550 sheets of 75 grams per square meter (20 lb) paper.

⚠ **CAUTION:** Do not print envelopes, labels, or unsupported sizes of paper from Tray 3. Print these types of paper only from Tray 1 depending on the type and size of media being used.

1. Open Tray 3.

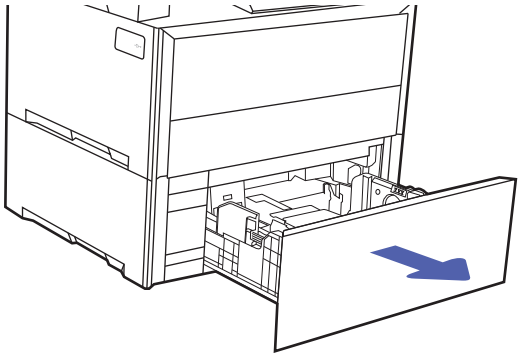

2. Adjust the paper-width guides by squeezing the adjustment latches on the guides. Then slide the guides to the size of the paper being used.

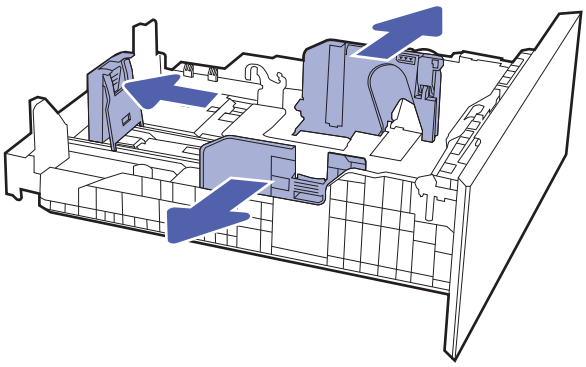

3. To load legal-size paper, extend the tray by squeezing the rear latch and pulling the front of the tray.

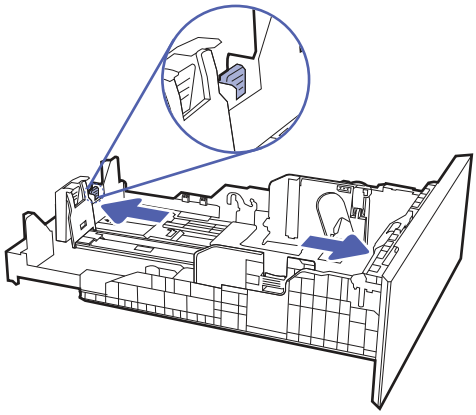

NOTE: When loaded with A4 or letter-size paper, Tray 2 extends from the rear of the printer approximately 54 mm (2.12 in).

When loaded with legal-size paper, Tray 2 extends from the rear of the printer approximately 110 mm (4.31 in).

4. Load plain white paper into the input tray.

For information about how to orient the paper, see Tray 3 paper orientation on page 22.

5. Make sure that the paper stack is flat at all four corners and below the paper fill line.

NOTE: To prevent jams, do not overfill the tray. Be sure that the top of the stack is below the tray full indicator.

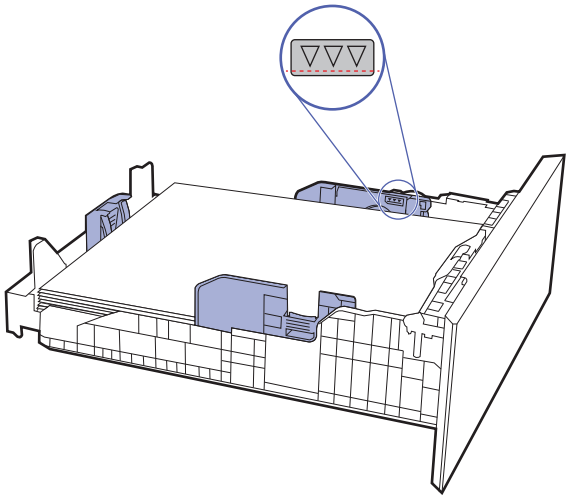

6. After making sure that the paper stack is below the tray full indicator, close the tray.

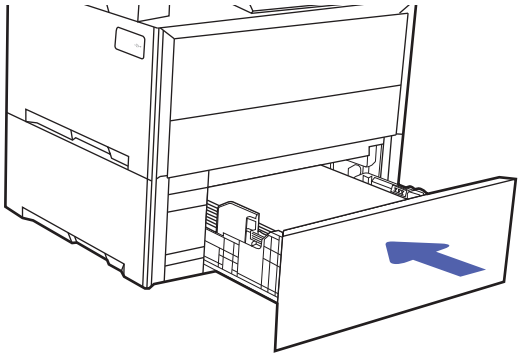

7. At your computer or mobile device, begin the printing process from the application. Make sure the driver is set to the correct paper type and size for the paper being printed from the tray.

Tray 3 paper orientation

When using paper that requires a specific orientation, load it according to the information in the following table.

Table 2-3 Tray 3 paper orientation

Paper type	Output	How to load paper
Letterhead or pre-printed	1-sided printing	Face-down Top edge away from the printer 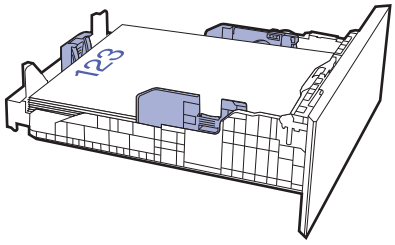
Letterhead or pre-printed	Two-sided printing	Face-up Top edge toward the printer. 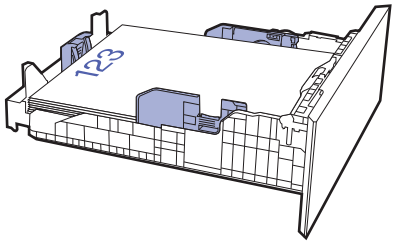

Table 2-3 Tray 3 paper orientation (continued)

Paper type	Output	How to load paper
Pre-punched	one-sided printing or two-sided printing	Face-up Holes on left side of the printer 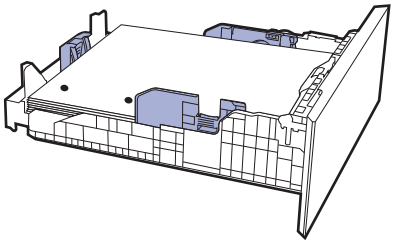

Load and print envelopes

Review the following information about loading and printing envelopes.

Print envelopes

To print envelopes using Tray 1, follow the steps to select the correct settings in the print driver. Tray 1 holds up to 10 envelopes.

NOTE: Envelopes cannot be printed from tray 2 or from the optional tray 3.

1. From the software program, select the **Print** option.
2. Select the printer from the list of printers, and then click or tap the **Properties** or **Preferences** button to open the print driver.

   NOTE: The name of the button varies for different software programs.

3. Click or tap the **Document** tab.
4. In the **Paper size** drop-down list, select the correct size for the envelopes.
5. In the **Paper type** drop-down list, select **Envelope**.
6. In the **Paper source** drop-down list, select **Manual feed**.
7. Click the **OK** button to close the **Document Properties** dialog box.
8. In the **Print** dialog box, click the **OK** button to print the job.

Envelope orientation

When using envelopes, load them according to the information in the following table.

Table 2-4 Envelope orientation

Tray	How to load
Tray 1	Face-up Short, postage-end leading into the printer 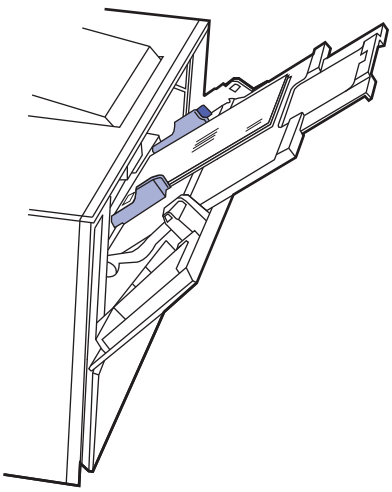

Load and print labels

To print on sheets of labels, use only Tray 1 (multipurpose tray), Tray 2, and optional Tray(s).

Manually feed labels

Use the manual feed mode for Tray 1 (multipurpose tray) to print sheets of labels.

1. From the software program, select the **Print** option.
2. Select the printer from the list of printers, and then click the **Properties** or **Preferences** button to open the print driver.

   NOTE: The name of the button varies for different software programs.

3. Click the **Paper/Quality** tab.
4. In the **Paper size** drop-down list, select the correct size for the sheets of labels.
5. In the **Paper type** drop-down list, select **Labels**.
6. In the **Paper source** drop-down list, select **Manual feed**.
7. Click the **OK** button to close the **Document Properties** dialog box.
8. In the **Print** dialog box, click the **Print** button to print the job.

Label orientation

Labels need to be loaded in a specific manner in order to print correctly.

Table 2-5 Label orientation

Tray	How to load labels
Tray 1	Face-down Bottom edge leading into the printer 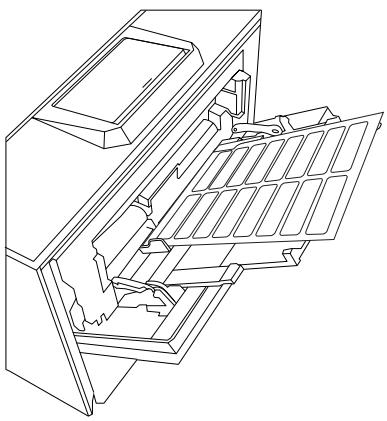

3 Supplies, accessories, and parts

Order supplies or accessories, replace the toner cartridges, or remove and replace another part.

The following information is correct at the time of publication. For current information, see http://www.hp.com/support/ljpro4000.

HP's all-inclusive help for the printer includes the following information:

- Install and configure
- Learn and use
- Solve problems
- Download software and firmware updates
- Join support forums
- Find warranty and regulatory information

Dynamic Security Enabled Printers

This printer is intended to work only with cartridges that have a new or reused HP chip. A reused HP chip enables the use of reused, remanufactured, and refilled cartridges.

The printer uses dynamic security measures to block cartridges using a non-HP chip. Periodic firmware updates delivered over the internet will maintain the effectiveness of the dynamic security measures and block cartridges that previously worked.

Updates can improve, enhance, or extend the printer's functionality and features, protect against security threats, and serve other purposes, but these updates can also block cartridges using a non-HP chip from working in the printer, including cartridges that work today. Unless you are enrolled in certain HP programs such as Instant Ink or use other services that require automatic online firmware updates, most HP printers can be configured to receive updates either automatically or with a notification that allows you to choose whether to update or not. For more information on dynamic security and how to configure online firmware updates, please go to www.hp.com/learn/ds.

Order supplies, accessories, and parts

Find out how to obtain replacement supplies, accessories, and parts for the printer.

Ordering

Order parts, supplies, or accessories through one of the following channels.

Table 3-1 Ordering options

Ordering option	Ordering information
Order supplies and paper	www.hp.com
Order genuine HP parts or accessories	www.hp.com/buy/parts
Order through service or support providers	Contact an HP-authorized service or support provider.
Order using the HP Embedded Web Server (EWS)	To access, in a supported web browser on your computer, enter the printer IP address or host name in the address/URL field. The EWS contains a link to the HP website, which provides options for purchasing Original HP supplies.

Supplies and accessories

Find information about the supplies and accessories that are available for your printer.

NOTE: Cartridges are for distribution and use with their designated product only; they will not work with other printer models.

Toner cartridges

Table 3-2 HP LaserJet Pro 4006

Item	Description	Part number
HP 161A Black Original LaserJet Toner Cartridge	Standard-capacity replacement black toner cartridge	W1610A
HP 161X High Yield Black Original LaserJet Toner Cartridge	High-capacity replacement black toner cartridge	W1610X

Table 3-3 HP LaserJet Pro 4007

Item	Description	Part number
HP 162A Black Original LaserJet Toner Cartridge	Standard-capacity replacement black toner cartridge	W1620A
HP 162X High Yield Black Original LaserJet Toner Cartridge	High-capacity replacement black toner cartridge	W1620X

Table 3-4 HP LaserJet Pro 4008

Item	Description	Part number
HP 164A Black Original LaserJet Toner Cartridge	Standard-capacity replacement black toner cartridge	W1640A

Table 3-4 HP LaserJet Pro 4008 (continued)

Item	Description	Part number
HP 164X High Yield Black Original LaserJet Toner Cartridge	High-capacity replacement black toner cartridge	W1640X

Accessories

Table 3-5 Accessories

Product Description	Part Number
HP LaserJet 550-Sheet Gray Input Tray	A1PF3A
HP LaserJet 550-Sheet Blue Input Tray	A1PF4A

Customer self-repair parts

Customer Self-Repair (CSR) parts are available for many HP LaserJet printers to reduce repair time.

More information about the CSR program and benefits can be found at http://www.hp.com/go/csr-support.

Genuine HP replacement parts can be ordered at http://www.hp.com/buy/parts or by contacting an HP-authorized service or support provider. When ordering, one of the following will be needed: part number, serial number (found on back of printer), product number, or printer name.

- Parts listed as **Mandatory** self-replacement are to be installed by customers, unless you are willing to pay HP service personnel to perform the repair. For these parts, on-site or return-to-depot support is not provided under the HP printer warranty.
- Parts listed as **Optional** self-replacement can be installed by HP service personnel at your request for no additional charge during the printer warranty period.

Table 3-6 Customer self repair parts

Item	Description	Self replacement options
Transfer Roller/T2	Transfer roller	Mandatory
Pick up rollers	Paper pick up rollers	Mandatory
Separation pads/rollers	Paper separation rollers	Mandatory
Feed Rollers	Paper feed rollers	Mandatory

Configure the HP toner-cartridge-protection supply settings

A network administrator can configure the toner-cartridge-protection settings using the printer control panel or the HP Embedded Web Server (EWS).

Introduction

Use HP Cartridge Policy and Cartridge Protection to control which cartridges are installed in the printer and protect the cartridges that are installed from theft.

- Cartridge Policy: This feature protects the printer from counterfeit toner cartridges by allowing only genuine HP cartridges to be used with the printer. Using genuine HP cartridges ensures the best possible print quality. When someone installs a cartridge that is not a genuine HP cartridge, the printer control panel displays a message that the cartridge is unauthorized and it provides information explaining how to proceed.
- Cartridge Protection: This feature permanently associates toner cartridges with a specific printer, or fleet of printers, so they cannot be used in other printers. Protecting cartridges protects your investment. When this feature is enabled, if someone attempts to transfer a protected cartridge from the original printer into an unauthorized printer, that printer will not print with the protected cartridge. The printer control panel displays a message that the cartridge is protected, and it provides information explaining how to proceed.

CAUTION: After enabling cartridge protection for the printer, all subsequent toner cartridges installed in the printer are automatically and *permanently* protected. To avoid protecting a new cartridge, disable the feature *before* installing the new cartridge.

Turning the feature off does not turn off protection for cartridges that are currently installed.

Both features are off by default. Follow these procedures to enable or disable them.

Enable or disable the Cartridge Policy feature

The Cartridge Policy feature can be enabled or disabled using the control panel or the Embedded Web Server (EWS).

NOTE: Enabling or disabling this feature might require entering an administrator password.

Check with your administrator to determine if an administrator password has been set. EWS passwords cannot be recovered.

Use the printer control panel to enable the Cartridge Policy feature

From the printer control panel, a network administrator can enable the Cartridge Policy feature. This allows only genuine HP cartridges to be used with the printer.

1. Navigate to the Setup menu:
   - **Touchscreen control panel**: From the Home screen on the printer control panel, swipe the tab at the top of the screen downward to open the Dashboard, and then touch the Setup icon ⚙.
   - **2-line LCD control panel**: Press the OK button to display the Home screen. Use the arrow buttons to navigate to Setup, and then press the OK button again.
2. From the Setup menu, touch or use the arrow buttons and the OK button to open the following menus:
   a. Supply Settings

b. Cartridge Policy

3. Select Authorized HP to enable the feature.

Use the printer control panel to disable the Cartridge Policy feature

From the printer control panel, a network administrator can disable the Cartridge Policy feature. This removes the restriction that only genuine HP cartridges can be used.

1. Navigate to the Setup menu:

   - **Touchscreen control panel**: From the Home screen on the printer control panel, swipe the tab at the top of the screen downward to open the Dashboard, and then touch the Setup icon ( ).

   - **2-line LCD control panel**: Press the OK button to display the Home screen. Use the arrow buttons to navigate to Setup, and then press the OK button again.

2. From the Setup menu, touch or use the arrow buttons and the OK button to open the following menus:

   a. Supply Settings

   b. Cartridge Policy

3. Select Off to disable the feature.

Use the HP Embedded Web Server (EWS) to enable the Cartridge Policy feature

From the EWS, a network administrator can enable the Cartridge Policy feature. This allows only genuine HP cartridges to be used with the printer.

1. Open the HP Embedded Web Server (EWS):

   a. At the printer control panel, use the control pad to select the Menu option, and then press **OK**.

   b. Then use the control pad to select Info, then select Connected under either Wi-Fi or Ethernet (whichever method you are using to connect), then use the interface to view the printer's IP address.

   c. Open a web browser, and in the address line, type the IP address or host name exactly as it displays on the printer control panel. Press the Enter key on the computer keyboard. The EWS opens.

   https://10.10.XX.XXX

   NOTE: If a message displays in the web browser indicating that the website might not be safe, select the option to continue to the website. Accessing this website will not harm the computer.

2. On the EWS Home page, click **Supplies** in the left navigation pane.

IMPORTANT: Access to the Embedded Web Server (EWS) menus requires a personal identification number (PIN). The default PIN for this printer is located on a sticker inside the toner access door. Use this PIN to log in when prompted.

The default PIN can be changed by a user or administrator.

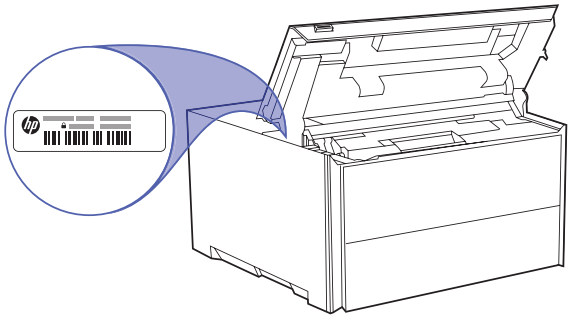

3. In the **Supplies**, windows click **Supply Settings**.

4. Under **Authorized HP Cartridge Policy**, click the button to turn it on.

Use the HP Embedded Web Server (EWS) to disable the Cartridge Policy feature

From the EWS, a network administrator can disable the Cartridge Policy feature. This removes the restriction that only genuine HP cartridges can be used.

1. Open the HP Embedded Web Server (EWS):

   a. At the printer control panel, use the control pad to select the Menu option, and then press the **OK**.

   b. Use the control pad to select Info, then select Connected under either Wi-Fi or Ethernet (whichever method you are using to connect), then use the dial to view the printer's IP address.

   c. Open a web browser, and in the address line, type the IP address or host name exactly as it displays on the printer control panel. Press the Enter key on the computer keyboard. The EWS opens.

   https://10.10.XX.XXX

   NOTE: If a message displays in the web browser indicating that the website might not be safe, select the option to continue to the website. Accessing this website will not harm the computer.

2. On the EWS Home page, click **Supplies** in the left navigation pane.

IMPORTANT: Access to the Embedded Web Server (EWS) menus requires a personal identification number (PIN). The default PIN for this printer is located on a sticker inside the toner access door. Use this PIN to log in when prompted.

The default PIN can be changed by a user or administrator.

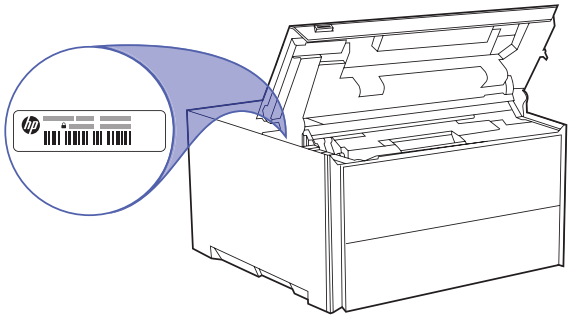

3. In the **Supplies**, window click **Supply Settings**.

4. Under **Authorized HP Cartridge Policy**, click the button to turn it off.

Troubleshoot Cartridge Policy control panel error messages

Review the recommended actions for Cartridge Policy error messages.

Table 3-7 Cartridge Policy control panel error messages

Error message	Description	Recommended action
10.0X.30 Unauthorized <Color> Cartridge	The administrator has configured this printer to use only genuine HP supplies that are still under warranty. The cartridge must be replaced to continue printing.	Replace the cartridge with a genuine HP toner cartridge. If you believe you purchased a genuine HP supply, visit www.hp.com/go/anticounterfeit to determine if the toner cartridge is a genuine HP cartridge, and learn what to do if it is not a genuine HP cartridge.

Enable or disable the Cartridge Protection feature

The Cartridge Protection feature can be enabled or disabled using the control panel or the Embedded Web Server (EWS).

NOTE: Enabling or disabling this feature might require entering an administrator password.

Check with your administrator to determine if an administrator password has been set. EWS passwords cannot be recovered.

Use the printer control panel to enable the Cartridge Protection feature

From the printer control panel, a network administrator can enable the Cartridge Protection feature. This protects the cartridges associated with the printer from being stolen and used in other printers.

1. From the Home screen on the printer control panel, swipe the tab at the top of the screen downward to open the Dashboard, and then touch the Setup icon ⚙.

2. Open the following menus:

   a. Supply Settings

   b. Cartridge Protection

3. Touch Protect Cartridges to enable the feature.

CAUTION: After enabling cartridge protection for the printer, all subsequent toner cartridges installed in the printer are automatically and *permanently* protected. To avoid protecting a new cartridge, disable the feature *before* installing the new cartridge.

Turning the feature off does not turn off protection for cartridges that are currently installed.

Use the printer control panel to disable the Cartridge Protection feature

From the printer control panel, a network administrator can disable the Cartridge Protection feature. This removes protection for any new cartridges installed in the printer.

1. From the Home screen on the printer control panel, swipe the tab at the top of the screen downward to open the Dashboard, and then touch the Setup icon ⚙.

2. Open the following menus:

   a. Supply Settings

   b. Cartridge Protection

3. Touch Off to disable the feature.

Use the HP Embedded Web Server (EWS) to enable the Cartridge Protection feature

From the EWS, a network administrator can enable the Cartridge Protection feature. This protects the cartridges that are associated with the printer from being stolen and used in other printers.

1. Open the HP Embedded Web Server (EWS):

   a. At the printer control panel, use the control pad to select the Menu option, and then press **OK**.

   b. Use the control pad to select Info, then select Connected under either Wi-Fi or Ethernet (whichever method you are using to connect), then use the control pad to view the printer's IP address.

   c. Open a web browser, and in the address line, type the IP address or host name exactly as it displays on the printer control panel. Press the Enter key on the computer keyboard. The EWS opens.

   https://10.10.XX.XXX

   NOTE: If a message displays in the web browser indicating that the website might not be safe, select the option to continue to the website. Accessing this website will not harm the computer.

2. On the EWS Home page, click **Supplies** in the left navigation pane.

IMPORTANT: Access to the Embedded Web Server (EWS) menus requires a personal identification number (PIN). The default PIN for this printer is located on a sticker inside the toner access door. Use this PIN to log in when prompted.

The default PIN can be changed by a user or administrator.

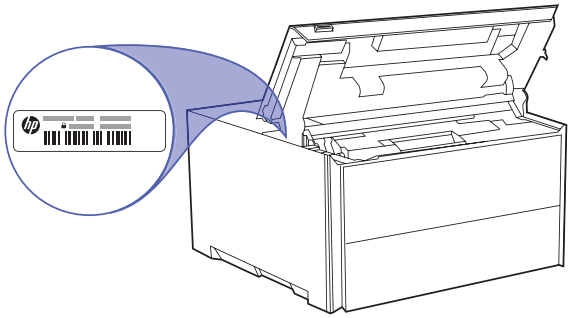

3. In the **Supplies**, window click **Supply Settings**.

4. Under **Cartridge Protection**, click the button to turn the feature on.

CAUTION: After enabling Cartridge Protection for the printer, all subsequent toner cartridges installed in the printer are automatically and *permanently* protected. To avoid protecting a new cartridge, disable the feature *before* installing the new cartridge.

Turning the feature off does not turn off protection for cartridges that are currently installed.

Use the HP Embedded Web Server (EWS) to disable the Cartridge Protection feature

From the EWS, a network administrator can disable the Cartridge Protection feature. This removes protection for any new cartridges installed in the printer.

1. Open the HP Embedded Web Server (EWS):

   a. At the printer control panel, use the control pad to select the Menu option, and then press the **OK**.

   b. Use the control pad to select Info, then select Connected under either Wi-Fi or Ethernet (whichever method you are using to connect), then use the control pad to view the printer's IP address.

   c. Open a web browser, and in the address line, type the IP address or host name exactly as it displays on the printer control panel. Press the Enter key on the computer keyboard. The EWS opens.

   https://10.10.XX.XXX

   NOTE: If a message displays in the web browser indicating that the website might not be safe, select the option to continue to the website. Accessing this website will not harm the computer.

2. On the EWS Home page, click **Supplies** in the left navigation pane.

IMPORTANT: Access to the Embedded Web Server (EWS) menus requires a personal identification number (PIN). The default PIN for this printer is located on a sticker inside the toner access door. Use this PIN to log in when prompted.

The default PIN can be changed by a user or administrator.

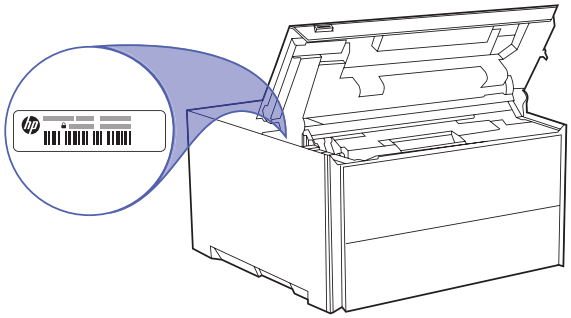

3. In the **Supplies**, window click **Supply Settings**.

4. Under **Cartridge Protection**, click the button to turn the feature off.

Troubleshoot Supply Protection control panel error messages

Review the recommended actions for Supply Protection error messages.

Table 3-8 Supply Protection control panel error messages

Error message	Description	Recommended action
10.0X.57 Protected <Color> Cartridge	The cartridge can only be used in the printer or fleet of printers that initially protected it using HP Supply Protection. The Supply Protection feature allows an administrator to restrict cartridges to work in only one printer or fleet of printers. The cartridge must be replaced to continue printing.	Replace the cartridge with a new toner cartridge.

Replace the toner cartridge

To ensure optimal print quality, replace the toner cartridge when the printer alerts you that the toner is low or empty.

Toner cartridge information

The printer indicates when the toner cartridge level is low. The actual toner cartridge life remaining can vary. Consider having a replacement cartridge available to install when print quality is no longer acceptable.

The printer uses only black toner. The toner cartridge is inside the top-front door. Lift up on the top front edge to access the toner.

Continue printing with the current cartridge until redistributing the toner no longer yields acceptable print quality. To redistribute the toner, remove the toner cartridge from the printer and gently rock the cartridge back and forth end to end. For graphical representation, see the cartridge replacement instructions. Reinsert the toner cartridge into the printer, and then close the cover.

To purchase cartridges or check cartridge compatibility for the printer, go to Learn about HP supplies at https://learn-about-supplies.ext.hp.com/. Scroll to the bottom of the page and verify that the country/region is correct.

NOTE: Cartridges are for distribution and use with their designated product only; they will not work with other printer models.

Table 3-9 Toner cartridges

Product model	Part Description	Part Number (New)
HP LaserJet Pro 4006	HP 161A Black Original LaserJet Toner Cartridge	W1610A
HP LaserJet Pro 4006	HP 161X High Yield Black Original LaserJet Toner Cartridge	W1610X
HP LaserJet Pro 4007	HP 162A Black Original LaserJet Toner Cartridge	W1620A
HP LaserJet Pro 4007	HP 162X High Yield Black Original LaserJet Toner Cartridge	W1620X
HP LaserJet Pro 4008	HP 164A Black Original LaserJet Toner Cartridge	W1640A
HP LaserJet Pro 4008	HP 164X High Yield Black Original LaserJet Toner Cartridge	W1640X

Do not remove the toner cartridge from its package until it is time to replace it.

CAUTION: To prevent damage to the toner cartridge, do not expose it to light for more than a few minutes. If the toner cartridge must be removed from the printer for an extended period of time, place the cartridge in the original plastic packaging, or cover the cartridge with a lightweight opaque item.

The following illustration shows the toner cartridge components.

Figure 3-1 **Toner cartridge components**

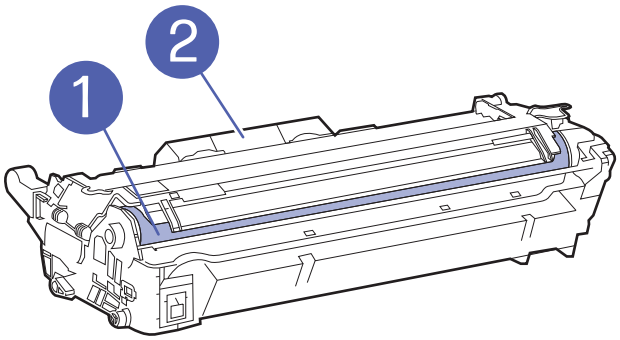

Number	Description
1	Imaging drum **CAUTION:** Do not touch the imaging drum. Fingerprints can cause print-quality problems.
2	Handle

CAUTION: If toner gets on clothing, wipe it off by using a dry cloth and wash the clothes in cold water. Hot water sets toner into fabric.

NOTE: Information about recycling used toner cartridges is in the toner cartridge box.

Replace the toner cartridge

Follow these steps to replace the toner cartridge.

1. Open the top door.

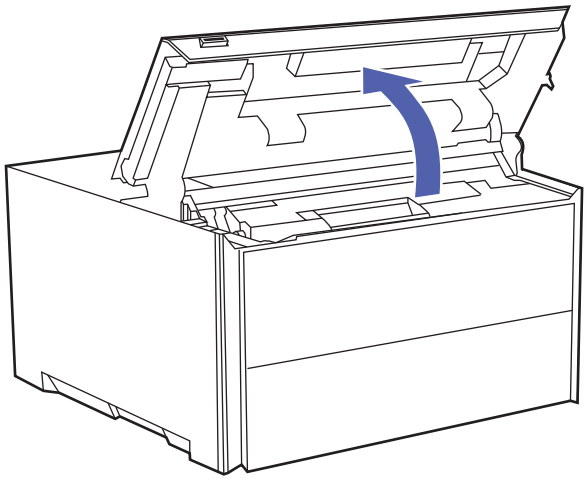

2. Grasp the handle on the toner cartridge, and then pull the toner cartridge out to remove it.

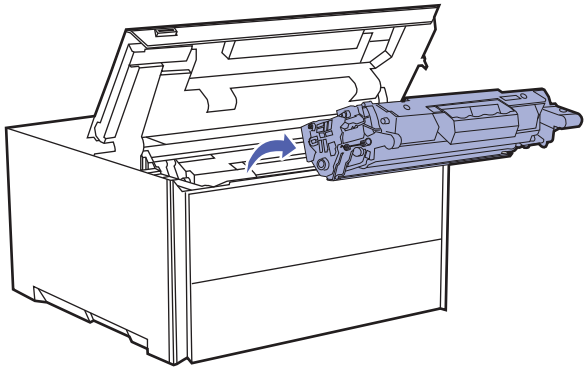

3. Remove the new toner cartridge package from the box, and then remove it from the packaging.

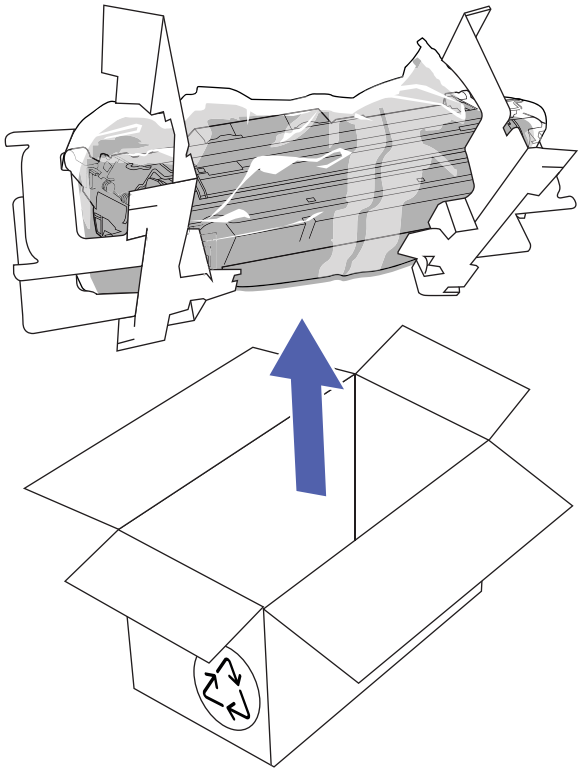

4. Hold both ends of the toner cartridge and rock it end to end to distribute the toner evenly inside the cartridge.

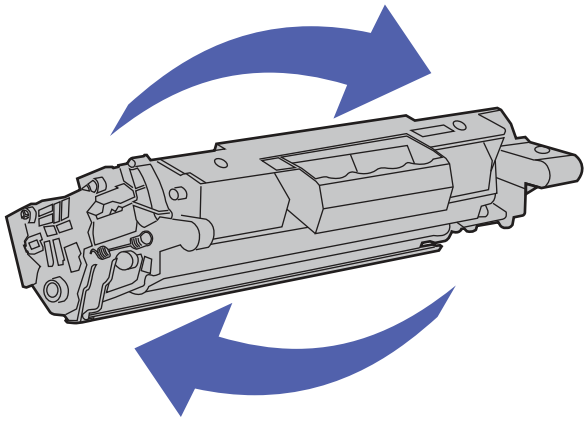

5. Do not touch the imaging drum on the bottom of the toner cartridge. Fingerprints on the imaging drum can cause print-quality problems. Also, do not expose the cartridge to light unnecessarily.

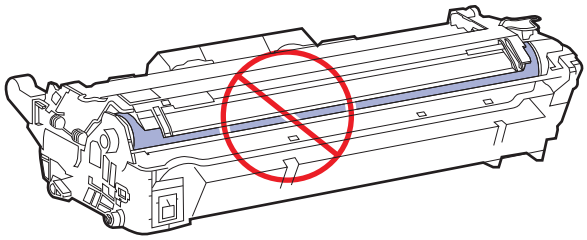

6. Insert the new toner cartridge into the printer.

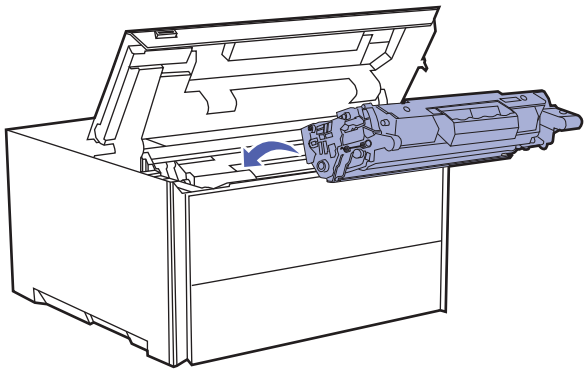

7. Close the top door.

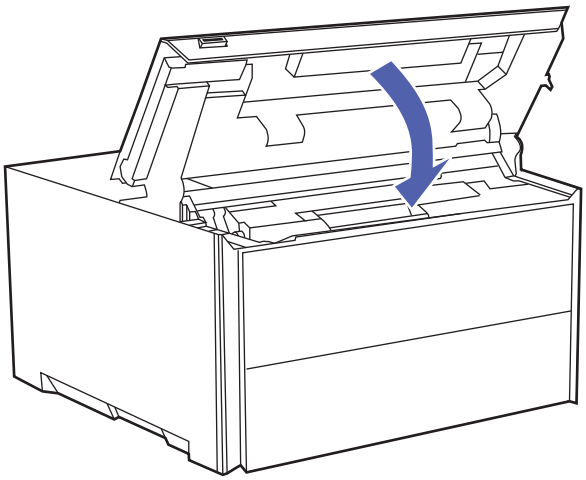

8. Pack the used toner cartridge into the box the new cartridge came in, or use a large cardboard box and fill it with several cartridges you need to recycle. See the enclosed recycling guide for information about recycling.

   In the US, a pre-paid shipping label is included in the box. In other countries/regions, go to www.hp.com/hprecycle to print a pre-paid shipping label.

   Adhere the pre-paid shipping label to the box, and return the used cartridge to HP for recycling.

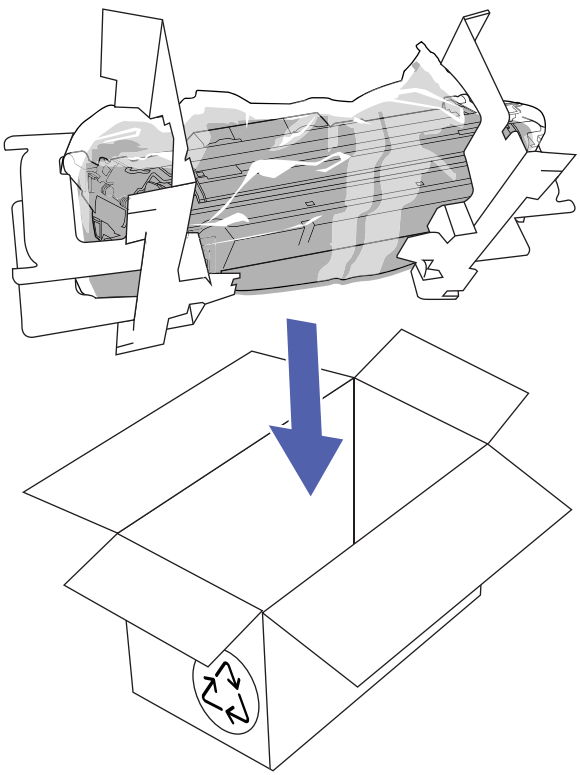

4 Print

Print using the software, or print from a mobile device or USB flash drive.

The following information is correct at the time of publication. For current information, see http://www.hp.com/support/ljpro4000.

For more information:

HP's all-inclusive help for the printer includes the following information:

- Install and configure
- Learn and use
- Solve problems
- Download software and firmware updates
- Join support forums
- Find warranty and regulatory information

Print tasks (Windows)

Learn about common printing tasks for Windows users.

How to print (Windows)

Use the **Print** option from a software application to select the printer and basic options for your print job.

The following procedure describes the basic printing process for Windows.

1. From the software program, select the **Print** option.
2. Select the printer from the list of printers. To change settings, click the **Properties** or **Preferences** button to open the print driver.

   NOTE: The name of the button varies for different software programs.

   NOTE: For more information, click the Help (?) button in the print driver.

3. Click the tabs in the print driver to configure the available options. For example, set the paper orientation, paper source, media type, and paper size on the **Document** tab, and set the quality settings on the **Basic** tab.
4. Click the **OK** button to return to the **Print** dialog box. Select the number of copies to print from this screen.
5. Click the **Print** button to print the job.

Automatically print on both sides (Windows)

If your printer has an automatic duplexer installed, you can automatically print on both sides of the paper. Use a paper size and type supported by the duplexer.

1. From the software program, select the **Print** option.
2. Select the printer from the list of printers, and then click the **Properties** or **Preferences** button to open the print driver.

   NOTE: The name of the button varies for different software programs.

3. Click the **Basic** tab.
4. Select **Flip on long edge** or **Flip on short edge** for the **Two-sided Printing** option. Click **OK** to close the **Document Properties** dialog.
5. In the **Print** dialog, click **Print** to print the job.

Manually print on both sides (Windows)

Use this procedure for printers that do not have an automatic duplexer installed or to print on paper that the duplexer does not support.

1. From the software program, select the **Print** option.
2. Select the printer from the list of printers, and then click the **Properties** or **Preferences** button to open the print driver.

   NOTE: The name of the button varies for different software programs.

3. Click the **Finishing** tab.
4. Select **Flip on long edge** or **Flip on short edge** for the **Two-sided Printing** option, and then click **OK** to close the **Document Properties** dialog.
5. In the **Print** dialog, click **Print** to print the first side of the job.
6. Retrieve the printed stack from the output bin, and place it in Tray 1.
7. If prompted, select the appropriate control panel button to continue.

Print multiple pages per sheet (Windows)

When you print from a software application using the **Print** option, you can select an option to print multiple pages on a single sheet of paper. For example, you might want to do this if you are printing a very large document and want to save paper.

1. From the software program, select the **Print** option.
2. Select the printer from the list of printers, and then click the **Properties** or **Preferences** button to open the print driver.

   NOTE: The name of the button varies for different software programs.

3. Click the **Basic** tab.
4. Select the number of pages per sheet from the **Pages per sheet** drop-down.
5. Select the **Print page borders** and **Page order** settings on the **Basic** tab, then set the **Orientation** setting on the **Document** tab, if needed. Click **OK** to close the **Document Properties** dialog.
6. In the **Print** dialog, click **Print** to print the job.

Select the paper type (Windows)

When you print from a software application using the **Print** option, you can set the paper type you are using for your print job. For example, if your default paper type is Letter, but you are using a different paper type for a print job, select that specific paper type.

1. From the software program, select the **Print** option.
2. Select the printer from the list of printers, and then click or tap the **Properties** or **Preferences** button to open the print driver.

   NOTE: The name of the button varies for different software programs.

3. Click the **Document** tab.
4. Select the **Media type** option for the type of paper you are using, and then click **OK**.
5. Click **OK** to close the **Document Properties** dialog.
6. In the **Print** dialog, click **Print** to print the job.

Additional print tasks

Locate information on the Web for performing common printing tasks.

Go to http://www.hp.com/support/ljpro4000.

Instructions are available for print tasks, such as the following:

- Create and use printing shortcuts or presets
- Select the paper size, or use a custom paper size
- Select the page orientation
- Create a booklet
- Scale a document to fit a specific paper size
- Print the first or last pages of the document on different paper
- Print watermarks on a document

Print tasks (macOS)

Print using the HP printing software for macOS, including how to print on both sides or print multiple pages per sheet.

How to print (macOS)

Use the **Print** option from a software application to select the printer and basic options for your print job.

The following procedure describes the basic printing process for macOS.

1. Click the **File** menu, and then click the **Print** option.
2. Select the printer.
3. Click **Show Details** or **Copies & Pages**, and then select other menus to adjust the print settings.

   NOTE: The name of the item varies for different software programs.

4. Click the **Print** button.

Automatically print on both sides (macOS)

If your printer has an automatic duplexer installed, you can automatically print on both sides of the paper. Use a paper size and type supported by the duplexer.

This feature is available if you install the HP print driver. It might not be available if you are using AirPrint.

1. Click the **File** menu, and then click the **Print** option.
2. Select the printer.
3. Click **Show Details** or **Copies & Pages**, and then click the **Layout** menu.

   NOTE: The name of the item varies for different software programs.

4. Select a binding option from the **Two-Sided** drop-down list.
5. Click the **Print** button.

Manually print on both sides (macOS)

If your printer does not have an automatic duplexer installed, or you are using a paper size or type not supported by the duplexer, you can print on both sides of the paper using a manual process. You will need to reload the pages for the second side.

This feature is available if you install the HP print driver. It might not be available if you are using AirPrint.

1. Click the **File** menu, and then click the **Print** option.
2. Select the printer.
3. Click **Show Details** or **Copies & Pages**, and then click the **Manual Duplex** menu.

   NOTE: The name of the item varies for different software programs.

4. Click the **Manual Duplex** check box, and select a binding option.
5. Go to the printer, and remove any blank paper that is in Tray 1.

6. Click the **Print** button.
7. Retrieve the printed stack from the output bin and place it with the printed-side facing down in the input tray.
8. If prompted, touch the appropriate control panel button to continue.

Print multiple pages per sheet (macOS)

When you print from a software application using the **Print** option, you can select an option to print multiple pages on a single sheet of paper. For example, you might want to do this if you are printing a very large document and want to save paper.

1. Click the **File** menu, and then click the **Print** option.
2. Select the printer.
3. Click **Show Details** or **Copies & Pages**, and then click the **Layout** menu.

   NOTE: The name of the item varies for different software programs.

4. From the **Pages per Sheet** drop-down list, select the number of pages that you want to print on each sheet.
5. In the **Layout Direction** area, select the order and placement of the pages on the sheet.
6. From the **Border** menu, select the type of border to print around each page on the sheet.
7. Click the **Print** button.

Select the paper type (macOS)

When you print from a software application using the **Print** option, you can set the paper type you are using for your print job. For example, if your default paper type is Letter, but you are using a different paper type for a print job, select that specific paper type.

1. Click the **File** menu, and then click the **Print** option.
2. Select the printer.
3. Click **Show Details** or **Copies & Pages**, and then click the **Media & Quality** menu or the **Paper/Quality** menu.

   NOTE: The name of the item varies for different software programs.

4. Select from the **Media & Quality** or **Paper/Quality** options.

   NOTE: This list contains the master set of options available. Some options are not available on all printers.

   - **Media Type**: Select the option for the type of paper for the print job.
   - **Print Quality**: Select the resolution level for the print job.
   - **EconoMode**: Select this option to conserve toner when printing drafts of documents.

5. Click the **Print** button.

Additional print tasks

Locate information on the Web for performing common printing tasks.

Go to http://www.hp.com/support/ljpro4000.

Instructions are available for print tasks, such as the following:

- Create and use printing shortcuts or presets
- Select the paper size, or use a custom paper size
- Select the page orientation
- Create a booklet
- Scale a document to fit a specific paper size
- Print the first or last pages of the document on different paper
- Print watermarks on a document

Store print jobs on the printer to print later or print privately

Store print jobs in the printer memory for printing at a later time.

Introduction

The following information provides procedures for creating and printing documents that are stored on the USB flash drive. These jobs can be printed at a later time or printed privately.

Requirements for using the job storage feature

Following are the requirements for using the job storage feature:

- A dedicated USB 2.0 storage device that is at least 16 GB in size must be installed in the rear host USB. This USB storage device holds the job storage jobs sent to the printer. Removing this USB storage device from the printer disables the job storage feature.

Set up job storage

Set up job storage in the print driver, insert the storage media (USB flash drive) in the printer, and verify the feature is ready to use.

Before you begin, install the printer software if it is not already installed. Go to www.hp.com/support, click **Software and Drivers**, and then follow the onscreen instructions to download the latest HP software.

When the print driver is installed, the Job Storage option is set to **Auto Config** by default. The option is located as follows:

- Windows: **Devices and Printers** > **Printer Properties** > **Device Settings**
- macOS: **Printers & Scanners** > **Options & Supplies**

To complete Job Storage setup:

1. Locate the rear USB port.

   NOTE: On some models, the rear USB port is covered. Remove the rear USB port cover before proceeding.

2. Insert the USB flash drive into the rear USB port.

   Figure 4-1 Insert USB flash drive

   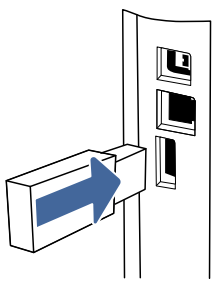

   A message displays on the control panel warning that the USB drive will be formatted. Select OK to complete the procedure.

3. Open the print driver to verify that the **Job Storage** check box appears on the **Basic** tab. If it is there, the feature is ready to use.

   From a software program, select the **Print** option, select your printer from the list of printers, and do the following:

   - **Windows:** Select **Properties** or **Preferences**. Click the **Basic** tab.

     If the **Job Storage** check box is not showing, activate it as follows:

     From the Start menu, open **Settings**, click **Devices**, and then click **Devices and Printers**. Right-click on the printer name and click **Printer Properties**. Click the **Device Settings** tab, click on **Job Storage**, and then select **Auto Config**. Click **Apply** and **OK**.

   - **macOS:** The print driver displays the **Copies & Pages** menu. Open the drop-down list, and then click the **Job Storage** menu.

     If the **Job Storage** menu is not showing, close the Print window and then reopen it to activate the menu.

Disable or enable the job storage feature

Disable the job storage feature to make it unavailable, even if a USB drive is inserted into the printer. Enable the feature to make it available again.

1. Open the **Printer Properties**:

   - **Windows:** From the Start menu, open **Settings**, click **Devices**, and then click **Devices and Printers**. Right-click on the printer and click **Printer properties**.

   - **macOS:** From the Apple menu, open **System Preferences**, and then click **Printers & Scanners**. Select the printer and click **Options & Supplies**.

2. Disable the Job Storage option as follows:

   - **Windows:** Click the **Device settings** tab, click on **Job Storage**, and then select **Disable**.

   - **macOS:** On the **Options** tab, clear the **Job Storage** check box.

To enable the feature, set the Job Storage option back to **Auto Config** (Windows), or select the **Job Storage** check box (macOS).

Create a stored job (Windows)

Store jobs on the USB flash drive for private or delayed printing.

1. From the software program, select the **Print** option.

2. Select the printer from the list of printers, and then select **Properties** or **Preferences**.

   NOTE: The name of the button varies for different software programs.

3. Click the **Basic** tab.

4. Select the **Job Storage** check box.

   NOTE: If the **Job Storage** check box is not showing, follow the instructions in the "Disable or enable job storage feature" section to activate the feature.

5. Select a **Print Mode** option:

   - **Normal print**: Sends print job to the printer and prints them immediately.
   - **PIN released**: Saves the print job on the printer as a stored job that can only be printed using a Personal Identification Number (PIN). Enter a 4-digit PIN in the **Enter PIN** field and the **Confirm PIN** field. The PIN must be entered at the printer control panel to print the stored job.

   NOTE: If a PIN is not entered, the default PIN is 0000.

   - **Secure encrypted**: Saves the print job on the printer as an encrypted print job. Enter a print job password in the **Enter Password** field and the **Confirm Password** field. The password must be entered at the printer control panel to print the encrypted job.

6. Click the **OK** button to close the **Document Properties** dialog box. In the **Print** dialog box, click the **Print** button to print the job.

Create a stored job (macOS)

Store jobs on the USB flash drive for private or delayed printing.

1. Click the **File** menu, and then click the **Print** option.
2. In the **Printer** menu, select the printer.
3. Click **Show Details** or **Copies & Pages**, and then click the **Job Storage** menu.

   NOTE: If the **Job Storage** menu is not showing, follow the instructions in the "Disable or enable job storage feature" section to activate the menu.

4. In the **Mode** drop-down list, select the type of stored job.

   - **Proof and Hold**: Print and proof one copy of a job, and then print more copies. The first copy prints immediately. Printing of the subsequent copies must be initiated from the device's front control panel. For example, if 10 copies are sent, one copy prints immediately, and the other nine copies will print when the job is retrieved. The job is deleted after all copies are printed.
   - **Personal Job**: The job does not print until someone requests it at the printer control panel. If the job has a personal identification number (PIN), provide the required PIN at the control panel. The print job is deleted from memory after it prints.
   - **Quick Copy**: Print the requested number of copies of a job and store a copy of the job in the printer memory to print it again later. The job is deleted manually or by the job retention schedule.
   - **Stored Job**: Store a job on the printer and allow other users to print the job at any time. If the job has a personal identification number (PIN), the person who prints the job must provide the required PIN at the control panel. The job is deleted manually or by the job retention schedule.

5. To use a custom user name or job name, click the **Custom** button, and then enter the user name or the job name.

   NOTE: **macOS 12.0 Monterey and above**: The print driver no longer includes the **Custom** button. Use the options below the **Mode** drop-down list to set up the saved job.

   Select which option to use if another stored job already has that name.

   - **Use Job Name + (1-99)**: Append a unique number to the end of the job name.

- **Replace Existing File**: Overwrite the existing stored job with the new one.

6. If you selected the **Stored Job** or **Personal Job** option in the **Mode** drop-down list, you can protect the job with a PIN. Type a 4-digit number in the **Use PIN to Print** field. When other people attempt to print this job, the printer prompts them to enter this PIN.

7. Click the **Print** button to process the job.

Print a stored job

Print a job that is stored on a USB flash drive.

1. At the printer control panel, use the control pad to select Print, and then press **OK**.

2. Use the control pad to select Print from USB, and then press **OK**.

3. Use the control pad to scroll to the name of the job that you want to print, and then press **OK**.

NOTE: If the job is private or encrypted, use the control pad to enter the PIN or password.

4. To adjust the print options, use the control pad to select Options, then press **OK**.

NOTE: After setting the desired print options, use the control pad to scroll to the back-arrow button at the top of the display, and then press **OK**.

5. The Print option is automatically selected. Press **OK** to print the job.

Delete a stored job

When a new job is stored on a USB flash drive, any previous jobs with the same user and job name are overwritten. If the memory on the USB flash drive is full, the following message displays on the printer control panel: **The USB flash storage device is out of memory. Delete unused jobs, and then try again.** Existing stored jobs must be deleted before additional print jobs can be stored.

Delete a job that is stored on the printer

Delete a job that is stored on a USB flash drive.

1. At the printer control panel, use the control pad to scroll to Print Stored Jobs, and then press **OK**.

2. Use the control pad to scroll to the name of the folder where the job is stored, and then press **OK**.

3. Use the control pad to scroll to the name of the job that you want to delete, and then press **OK**.

NOTE: If the job is private or encrypted, enter the PIN or password, and then touch Done.

4. Use the control pad to select Delete, and then press **OK** to delete the job.

Information sent to printer for Job Accounting purposes

Printing jobs sent from drivers on the client (e.g., PC) may send personally identifiable information to HP's Printing and Imaging devices. This information may include, but is not limited to, user name and client name from which the job originated that may be used for job accounting purposes, as determined by the Administrator of the printing device. This same information may also be stored with the job on the mass storage device (e.g., disk drive) of the printing device when using the job storage feature.

Wi-Fi Direct printing (wireless models only)

Wi-Fi Direct enables printing from a wireless mobile device without requiring a connection to a network or the Internet.

NOTE: Not all mobile operating systems are currently supported by Wi-Fi Direct.

Use **Wi-Fi Direct** to print wirelessly from the following devices:

- Android mobile devices compatible with the Android embedded print solution
- iPhone, iPad, or iPod touch using Apple AirPrint or the HP Smart app
- Android mobile devices using the HP Smart app or the Android embedded print solution
- HP Roam

For more information on Wi-Fi Direct printing, go to www.hp.com/go/wirelessprinting.

Wi-Fi Direct can be enabled or disabled from the printer control panel.

To turn on Wi-Fi Direct

To print wirelessly from mobile devices, Wi-Fi Direct must be turned on.

Follow these steps to turn on Wi-Fi Direct from the printer control panel.

1. At the printer control panel, touch the Menu icon.
2. Select Settings, and then select Network.
3. Select Wi-Fi Direct.
4. If Wi-Fi Direct is set to Off, select it to turn it on.

NOTE: In environments where more than one model of the same printer is installed, it might be helpful to provide each printer a unique Wi-Fi Direct name for easier printer identification when using Wi-Fi Direct printing.

Change the printer Wi-Fi Direct name

Change the printer Wi-Fi Direct name using the HP Embedded Web Server (EWS):

Step one: Open the HP Embedded Web Server

Use the EWS to manage your printer from a computer instead of the printer control panel.

Your printer must be connected to an IP-based network before you can access the EWS.

1. At the printer control panel, select the Menu option.
2. Select Info, then select Connectivity to view the printer's IP address.

3. Open a web browser, and in the address line, type the IP address or host name exactly as it displays on the printer control panel. Press the Enter key on the computer keyboard. The EWS opens.

https://10.10.XX.XXX

NOTE: If a message displays in the web browser indicating that the website might not be safe, select the option to continue to the website. Accessing this website will not harm the computer.

Step two: Change the Wi-Fi Direct name

Use the following procedure to change the Wi-Fi Direct name.

1. On the EWS Home page, click **Network** in the left navigation pane.
2. Under **Network** in the left navigation pane, click **Wi-Fi Direct**.
3. At the top of the **Wi-Fi Direct** page, click **Configuration**.
4. In the **Wi-Fi Direct Name** field, enter the new name, and then click **Apply**.

5 Manage the printer

Utilize management tools, configure security and energy-conservation settings, and manage firmware updates for the printer.

The following information is correct at the time of publication. For current information, see http://www.hp.com/support/ljpro4000.

For more information:

HP's all-inclusive help for the printer includes the following information:

- Install and configure
- Learn and use
- Solve problems
- Download software and firmware updates
- Join support forums
- Find warranty and regulatory information

Change the printer connection type (Windows)

If you are already using the printer and you wish to change the way it is connected, use **Device Setup & Software** to change the connection. For example, connect the new printer to the computer using a USB or network connection, or change the connection from a USB to a wireless connection.

To open **Device Setup & Software**, complete the following procedure:

1. From the **Start** menu, select **HP**, and then select the printer name to open the HP Printer Assistant.
2. In the HP Printer Assistant, select **Tools** from the navigation bar, and then select **Device Setup & Software**.

Advanced configuration with HP Embedded Web Server and Printer Home Page (EWS)

Use the HP Embedded Web Server to manage printing functions from your computer instead of the printer control panel.

- View printer status information
- Determine the remaining life for all supplies and order new ones
- View and change tray configurations (paper types and sizes)
- View and print internal pages
- View and change network configuration

The HP Embedded Web Server works when the printer is connected to an IP-based network. The HP Embedded Web Server does not support IPX-based printer connections. You do not have to have Internet access to open and use the HP Embedded Web Server.

When the printer is connected to the network, the HP Embedded Web Server is automatically available.

NOTE: Printer Home Page (EWS) is software used to connect to the HP Embedded Web Server when the printer is connected to a computer via USB. It is available only if a full installation was performed when the printer was installed on a computer. Depending on how the printer is connected, some features might not be available.

NOTE: The HP Embedded Web Server is not accessible beyond the network firewall.

Open the HP Embedded Web Server (EWS) from a web browser

Use the EWS to manage your printer from a computer instead of the printer control panel.

Your printer must be connected to an IP-based network before you can access the EWS.

1. From the Home screen on the printer control panel, touch the Menu icon, and then touch Info.
2. Touch Connectivity to display the IP address or host name of the printer.
3. Open a web browser, and in the address line, type the IP address or host name exactly as it displays on the printer control panel. Press the Enter key on the computer keyboard. The EWS opens.

   https://10.10.XX.XXX

   If a message displays in the web browser indicating that the website might not be safe, select the Advanced option to continue to the website. Accessing this website will not harm the computer

IMPORTANT: Access to the Embedded Web Server (EWS) menus requires a personal identification number (PIN).

To obtain the default printer PIN: Open the toner cartridge access door by lifting the scanner (callout 1), and then lifting the cartridge door (callout 2). The default printer PIN is located on a label at the left side of the toner cartridge access area.

Use this PIN to log in when prompted. The default PIN can be changed by a user or administrator.

Embedded Web Server menus

Refer to the table below for a list of tabs and features available in the EWS.

Table 5-1 HP Embedded Web Server menus

Page	Description
Home page Provides supplies and trays status information.	• **Cartridges**: View the status of the cartridges and the estimated cartridge levels. • **Paper**: View paper tray levels and paper type settings for each tray.
Jobs	**Job Queue**: View current print jobs in progress and a history of past jobs.
Print	• **Print from USB**: View or change the default print options when printing using a USB flash drive. • **Print from Job Storage** : Configure job-storage options for print jobs. • **Default Print Options**: Configure the default options for print jobs. • • **General Print settings**: Set an option for jam recovery when printing. • **PCL and PostScript**: Adjust the PCL and PostScript settings for all print jobs. • **Stamps**: Allows you to upload an image and include it to the top center of every printed page.
Supplies	View the status of the printer supplies, and access supply settings.
Paper	**Trays**: View the printer paper size and type in each tray and configure general settings for the paper trays.
Print Quality	• **Tools**: Print the **Print Quality Diagnostic Report** to get instructions for how to solve print-quality problems. • **Calibration Settings**: Enable or disable the automatic cleaning feature. • **Optimize**: View or change settings that may help to improve print quality. • **Paper Type Adjustment**: The settings on this page allow you to adjust the print mode settings for specific paper types. This should be done under supervision from HP technical support. • **Image Registration**: Adjusts the image to the center on the front and back of a page. • **Toner Density**: Sets the toner density to enable all print jobs to be lighter or darker than the factory default settings.

Table 5-1 HP Embedded Web Server menus (continued)

Page	Description
General	• **About the Printer**: Lists all the basic technical information about this printer, including the firmware version. • **Event Log**: View or print the log showing all the printer errors. • **Location**: View or change the printer's country/region. • **Language**: View or change the printer's default language or the language to display the EWS information. • **Alerts**: Set up email alerts for events that could interrupt printer usage. • **Date and Time**: Allows you to set the time zone and the date and time format for the printer. • **Power Settings**: Restart the printer or configure the energy settings to reduce energy consumption. • **Display Settings**: View or change what action the printer will take when a non-critical error occurs. • **Firmware Update**: Checks to see if the firmware version is the latest available, and provides an option to update it. • **Quiet Mode**: Use this feature to reduce printing noise. This can reduce the print speed. • **Email Servers**: Use this page to set up the outgoing email server for sending scanned documents via email. • **Restore Default Settings**: Allows you to restore network settings or all printer settings back to default. • **Import/Export**: Use this feature to export files that can be used to configure other devices.

Table 5-1 HP Embedded Web Server menus (continued)

Page	Description
Network	(Network-connected printers only) Provides the ability to change printer network settings from your computer. • **Network Summary**: View information about the network protocols that are currently in use on this printer. • **Network Settings**: Provides access to a variety of network settings including SNMP and IP settings. • **Network Security**: View or change the Firewall, Secure Communication, and Announcement Agent settings. • **Proxy Settings**: Configure any proxy settings necessary for your network. • **Primary Ethernet**: View or change Ethernet settings for the printer. • **Wi-Fi**: View or change Wi-Fi settings for the printer. • **Advanced Settings**: Set up any advanced network settings required for your printing environment. • **Bluetooth Low Energy**: Bluetooth low energy is an ultra-low power, Wi-Fi technology that provides connections between the printer and other devices. Use this page to turn it on or off. • **Wi-Fi Direct**: With Wi-Fi Direct, you can print directly from a Wi-Fi-capable computer or mobile device without connecting to an existing wireless network. Use this page to enable and configure it. • **Diagnostics**: Troubleshoot printer problems or enhance network operation.
Security	• **Password Settings**: Set up an administrator password to restrict access to certain features on the printer. • **Printer Features**: Customize the printer features displayed on the printer control panel. • **General Security**: View or change the EWS and printer time-outs • **Access Control**: Add an Admin password for the EWS and control other types of access such as LDAP and Windows authentication. • **Protect Stored Data**: Provides a way to erase securely stored data from the printer. • **Printer Supply Region Reset**: Enables the printer to use cartridges from a new country/region. • **Certificate Management**: Create or install any security certificates required on this printer.
Support Tools	• **Reports and pages**: Shows a list of internal reports and pages for the printer that can be printed. • **Online Resources**: Links to HP Support online help to assist in troubleshooting printer issues. • **Service Support**: Used by HP technical support to assist you in troubleshooting printer problems. • **Auto Recovery**: Enable this option to allow the printer to recover from system errors • **Back up and Restore**: Allows you to create a backup copy of the printer configuration and settings.

Table 5-1 HP Embedded Web Server menus (continued)

Page	Description
Privacy	Enable the **Printer Analytics** feature to allow HP collect and analyze printer usage data to improve printer functionality.
HP Cloud Connection	• **HP Cloud Connection**: Use this feature to connect the printer to HP Cloud after you opt in to an HP cloud service or choose to share printer analytics. • **Printer Paring**: Use this page to pair this printer to an HP account. Pairing your printer to your HP account allows access to HP cloud solutions. • **Reset Cloud Connection**: Use this feature for cloud connection issues.
Accessibility	Enables users who have vision disabilities to access the control panel icons and menus.

Configure IP network settings

Review the following information about configuring IP network settings.

Printer sharing disclaimer

HP does not support peer-to-peer networking, as the feature is a function of Microsoft operating systems and not of the HP printer drivers.

Go to Microsoft at www.microsoft.com.

View or change network settings

Use the HP Embedded Web Server to view or change IP configuration settings.

1. Open the HP Embedded Web Server (EWS):

   a. At the printer control panel, use the control pad to select the Menu option, and then press **OK**..

   b. Use the control pad to select Info, then select Connected under either WiFi or Ethernet (whichever method you are using to connect), then use the contorl pad to view the printer's IP address.

   c. Open a web browser, and in the address line, type the IP address or host name exactly as it displays on the printer control panel. Press the Enter key on the computer keyboard. The EWS opens.

   https://10.10.XX.XXX

   NOTE: If a message displays in the web browser indicating that the website might not be safe, select the Advanced option to continue to the website. Accessing this website will not harm the computer.

2. On the EWS Home page, click **Network** in the left navigation pane, and then select **Network Settings** to view network information. Change settings as needed.

NOTE: Enter the EWS PIN number when prompted.

Rename the printer on a network

Use the HP Embedded Web Server (EWS) to rename the printer on a network so it can be uniquely identified.

1. Open the HP Embedded Web Server (EWS):

   a. At the printer control panel, use the control pad to select the Menu option, and then press **OK**

   b. Use the control pad to select Info, then select Connected under either WiFi or Ethernet (whichever method you are using to connect), then use the control pad to view the printer's IP address.

c. Open a web browser, and in the address line, type the IP address or host name exactly as it displays on the printer control panel. Press the Enter key on the computer keyboard. The EWS opens.

https://10.10.XX.XXX

NOTE: If a message displays in the web browser indicating that the website might not be safe, select the Advanced option to continue to the website. Accessing this website will not harm the computer.

2. On the EWS Home page, click **Network** in the left navigation pane.
3. Under **Network**, click **Network Settings**.
4. On the **Network Settings** page, click **Identification**.
5. In the **Host Name** text field, enter a name to uniquely identify this printer, and then click **Apply** to save the changes.

Manually configure IPv4 TCP/IP parameters from the control panel

Use the control-panel menus to manually set the IPv4 address, subnet mask, and default gateway.

1. At the printer control panel, use the control pad to select the Menu option, and then **OK**.
2. Use the control pad to select Settings, and then press **OK**.
3. Use the control pad to select Network , and then press **OK** to open the network settings list.
4. Use the control pad to select one of the following menus, and then press **OK**.
   - Ethernet Settings (for a wired network)
   - Wireless Settings (for a wireless network)
5. Adjust the settings as needed.

Manually configure IPv6 TCP/IP parameters from the control panel

Use the control-panel Settings menus to manually set an IPv6 address.

1. At the printer control panel, touch the Menu icon, and then select Settings.
2. Touch Network to open the network settings list.
3. Open the following menus:
   - Ethernet
   - IPv6
4. Touch the button next to Manual Address to enable the setting.
5. To configure the address, touch the Manual Address text field.
6. Use the keypad to enter the address, and then touch the OK button.
7. Touch Apply.

Link speed and duplex settings

The link speed and communication mode of the print server must match the network hub. For most situations, leave the printer in automatic mode. Incorrect changes to the link speed and duplex settings might prevent the printer from communicating with other network devices. If you need to make changes, use the printer control panel.

NOTE: This information applies only to Ethernet (wired) networks. It does not apply to wireless networks.

NOTE: The printer setting must match the setting for the network device (a network hub, switch, gateway, router, or computer).

NOTE: Making changes to these settings causes the printer to turn off and then on. Make changes only when the printer is idle.

1. At the printer control panel, use the control pad to select the Menu option, and then press **OK**.
2. Use the control pad to select Settings, and then press **OK**.
3. Use the control pad to open the following menus:
   a. Network Settings
   b. Ethernet Settings
   c. Link Speed
4. Use the control pad to select one of the following options:

Table 5-2 Link Speed settings

Setting	Description
10 Mb Half	10 Mbps, half-duplex operation
10 Mb Full	10 Mbps, full-duplex operation
100 Mb Half	100 Mbps, half-duplex operation
100 Mb Full	100 Mbps, full-duplex operation
1000 Mb Full	1000 Mbps, full-duplex operation
Automatic	The print server automatically configures itself for the highest link speed and communication mode allowed on the network.

Printer security features

Review the following information about the printer security features.

Introduction

The printer includes several security features to restrict who has access to configuration settings, to secure data, and to prevent access to valuable hardware components.

Assign or change the system password using the Embedded Web Server

Assign an administrator password for access to the printer and the HP Embedded Web Server so that unauthorized users cannot change the printer settings.

1. Open the HP Embedded Web Server (EWS):

   a. At the printer control panel, rotate the control dial to select the Menu option, and then press the dial.

   b. Rotate and press the dial to select Info, then rotate to select Connected under either WiFi or Ethernet (whichever method you are using to connect), then use the dial to view the printer's IP address.

   c. Open a web browser, and in the address line, type the IP address or host name exactly as it displays on the printer control panel. Press the Enter key on the computer keyboard. The EWS opens.

   https://10.10.XX.XXX

   NOTE: If a message displays in the web browser indicating that the website might not be safe, select the option to continue to the website. Accessing this website will not harm the computer.

2. On the EWS Home page, click **Security** in the left navigation pane to expand the options, and then click **Access Control**.

   IMPORTANT: Access to the Embedded Web Server (EWS) menus requires a personal identification number (PIN). The default PIN for this printer is located on a sticker inside the toner cartridge access door. Use this PIN to log in when prompted.

   The default PIN can be changed by a user or administrator.

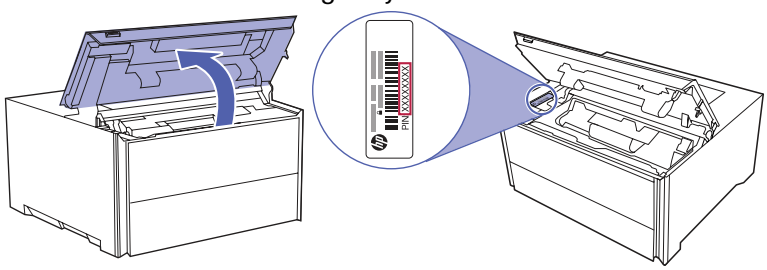

3. Enter the current password, if one has been assigned.

4. Enter the new password.

5. Re-enter the password in the **Confirm Password** field, and then click **Apply**.

NOTE: Make note of the password and store it in a safe place.

Energy-conservation settings

Learn about the energy-conservation settings that are available on your printer.

NOTE: Configuring longer times for these settings or turning off these features will increase energy consumption.

Print with EconoMode

This printer has an EconoMode option for printing drafts of documents. Using EconoMode can use less toner. However, using EconoMode can also reduce print quality.

HP does not recommend the full-time use of EconoMode. If EconoMode is used full-time, the toner supply might outlast the mechanical parts in the toner cartridge. If print quality begins to degrade and is no longer acceptable, consider replacing the toner cartridge.

NOTE: If this option is not available in your print driver, you can set it using the HP Embedded Web Server.

1. From the software program, select the **Print** option.
2. Select the printer, and then click the **Properties** or **Preferences** button.
3. Click the **Paper/Quality** tab.
4. Click the drop-down menu in the **Print Quality** section, and then select **EconoMode**.
5. Click **OK** to save the change.

Set the Sleep Mode setting

Use the control panel menus to specify the amount of time the printer must be inactive before it goes into sleep mode.

1. From the Home screen on the printer control panel, touch the Menu icon, and then touch Settings.
2. Scroll to and open the following menus:
   a. General
   b. Energy
   c. Sleep
3. Touch an option to specify the amount of time the printer must be inactive before it goes into sleep mode.
4. When you are finished, touch the back arrow button to return to the General settings menu, or touch the Home button to return to the Home screen.

Set the Shutdown Mode setting

Use the control panel menus to specify the amount of time the printer must be inactive before it shuts down.

NOTE: After the printer shuts down, the power consumption is 1 watt or less.

1. From the Home screen on the printer control panel, touch the Menu icon, and then touch Settings.

2. Scroll to and open the following menus:
   a. General
   b. Energy
   c. Shutdown- Adjust the inactive time before shutdown
3. Touch an option to specify the amount of time the printer must be inactive before it shuts down.
4. When you are finished, touch the back arrow button to return to the General settings menu, or touch the Home button to return to the Home screen.

Set the Disable Shutdown setting

Use the control panel menus to disable the printer from shutting down after a period of inactivity.

1. From the Home screen on the printer control panel, touch the Menu icon, and then touch Settings.
2. Scroll to and open the following menus:
   a. General
   b. Energy
   c. Disable Shutdown
3. Touch one of the following options:
   - When ports are active: The printer will not shut down unless all ports are inactive. An active network link or fax connection will prevent the printer from shutting down.
   - Do not disable: The printer will shut down after a period of inactivity as determined by the Shutdown Mode setting.

NOTE: The default setting is When ports are active.

HP Web Jetadmin

HP Web Jetadmin is an award-winning, industry-leading tool for efficiently managing a wide variety of networked HP products, including printers, multifunction printers, and digital senders. This single solution allows you to remotely install, monitor, maintain, troubleshoot, and secure your printing and imaging environment – ultimately increasing business productivity by helping you save time, control costs, and protect your investment.

HP Web Jetadmin upgrades are periodically made available to provide support for specific product features. Go to www.hp.com/go/webjetadmin for more information.

Dynamic Security Enabled Printers

This printer is intended to work only with cartridges that have a new or reused HP chip. A reused HP chip enables the use of reused, remanufactured, and refilled cartridges.

The printer uses dynamic security measures to block cartridges using a non-HP chip. Periodic firmware updates delivered over the internet will maintain the effectiveness of the dynamic security measures and block cartridges that previously worked.

Updates can improve, enhance, or extend the printer's functionality and features, protect against security threats, and serve other purposes, but these updates can also block cartridges using a non-HP chip from working in the printer, including cartridges that work today. Unless you are enrolled in certain HP programs such as Instant Ink or use other services that require automatic online firmware updates, most HP printers can be configured to receive updates either automatically or with a notification that allows you to choose whether to update or not. For more information on dynamic security and how to configure online firmware updates, please go to www.hp.com/learn/ds.

Update the firmware

HP regularly updates features that are available in the printer firmware. To take advantage of the most current features, HP recommends that you update the printer firmware regularly.

There are two supported methods to perform a firmware update on this printer. Use only one of the following methods to update the printer firmware.

Method one: Update the firmware using the control panel

Follow these steps to update the firmware using the printer control panel (for network-connected printers only), and/or set the printer to install future firmware updates automatically.

For USB-connected printers, skip to **Method two**.

1. Make sure the printer is connected to a wired (Ethernet) or wireless network with an active Internet connection.

   NOTE: The printer must be connected to the internet to update the firmware via a network connection.

2. At the printer control panel, use the control pad to select the Menu option, and then press **OK**.
3. Use the control pad to select Tools, and then press **OK**.
4. Use the control pad to select Maintenance, and then press **OK**.
5. Use the control pad to select Firmware, and then press **OK**.
6. Use the control pad to select Check for Update, and then press **OK**.

   A "**Do you want to continue?**" message displays on the control panel.

7. Use the control pad to select Yes, and then press **OK**.

   The printer checks for and installs new firmware updates.

Method two: Update the firmware using the Embedded Web Server

Follow the instructions below to update the printer firmware using the Embedded Web Server.

1. Open the HP Embedded Web Server (EWS):

   a. At the printer control panel, use the control pad to select the Menu option, and then press **OK**.

   b. Use the control pad to select Info, then press **OK** and the select Connected under either WiFi or Ethernet (whichever method you are using to connect), then use the control pad to view the printer's IP address.

c. Open a web browser, and in the address line, type the IP address or host name exactly as it displays on the printer control panel. Press the Enter key on the computer keyboard. The EWS opens.

https://10.10.XX.XXX

NOTE: If a message displays in the web browser indicating that the website might not be safe, select the option to continue to the website. Accessing this website will not harm the computer.

IMPORTANT: Access to the Embedded Web Server (EWS) menus requires a personal identification number (PIN). The default PIN for this printer is located on a sticker inside the toner cartridge access door. Use this PIN to log in when prompted.

The default PIN can be changed by a user or administrator.

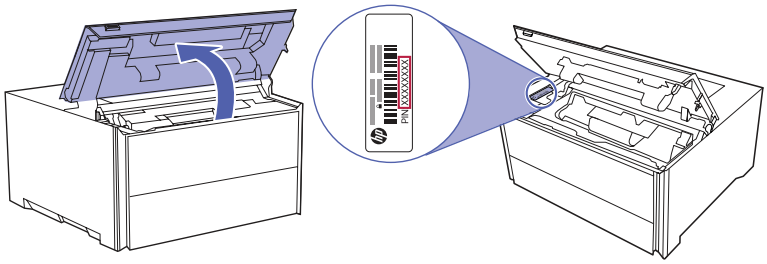

2. On the EWS Home page, click **Printer Management** in the left navigation pane to expand the options, and then click **Firmware Update**. The program checks to see whether the printer has the most recent firmware.

3. If the firmware needs to be upgraded, click **Check for Update**, and follow the onscreen instructions.

Method three: Update the firmware using the HP Printer Update utility

Follow these steps to manually download and install the HP Printer Update utility.

NOTE: This method is the only firmware update option available for printers connected to the computer via a USB cable. This method also works for printers that are connected to a network.

NOTE: You must have a print driver installed in order to use this method.

1. Go to support.hp.com, click **Software and Drivers**, and then click **Printer**.

2. In the text field, type the printer name, click **Submit**, and then click your printer model from the list of search results.

3. In the **Firmware** section, locate the **Firmware Update** file.

4. Click **Download**, and then click **Run**.

5. When the HP Printer Update utility launches, select the printer that you wish to update, and then click **Update**.

6. Follow the on-screen instructions to complete the installation, and then click the **OK** button to close the utility.

6 Solve problems

Troubleshoot problems with the printer. Locate additional resources for help and technical support.

The following information is correct at the time of publication. For current information, see http://www.hp.com/support/ljpro4000.

For more information:

HP's all-inclusive help for the printer includes the following information:

- Install and configure
- Learn and use
- Solve problems
- Download software and firmware updates
- Join support forums
- Find warranty and regulatory information

Customer support

Find support contact options for your HP printer.

Table 6-1 HP support options

Support option	Contact information
Get telephone support for your country/region Have the printer name, serial number, date of purchase, and problem description ready	Country/region phone numbers are on the flyer that was in the box with the printer or at support.hp.com.
Get 24-hour Internet support, and download software utilities and drivers	http://www.hp.com/support/ljpro4000
Order additional HP service or maintenance agreements	www.hp.com/go/carepack
Register the printer	www.register.hp.com

Control panel help system

The printer has a built-in Help system that explains how to use each screen.

To open the Help system:

1. From the Home screen on the printer control panel, touch the Menu icon.
2. Scroll to and touch Help.

Restore the factory-set defaults

Restoring the factory-set defaults returns all of the printer and network settings to the factory defaults. It will not reset the page count, or tray size.

To restore the printer to the factory-default settings, follow these steps.

⚠ **CAUTION:** Restoring the factory-set defaults returns all of the settings to the factory defaults, and it also deletes any pages that are stored in the memory.

1. From the Home screen on the printer control panel, touch the Menu icon, and then touch Settings.
2. Scroll to and open the following menus:
   a. Maintenance
   b. Restore Settings
3. Touch Restore All Factory Defaults.

   A Restoring Printer Settings message displays on the screen, and then the printer automatically restarts.

A “Cartridge is low” or “Cartridge is very low” message displays on the printer control panel

Understand the cartridge-related messages on the control panel and what actions to take.

Cartridge is low: The printer indicates when a toner cartridge level is low. Actual toner cartridge life remaining may vary. Consider having a replacement available to install when print quality is no longer acceptable. The toner cartridge does not need to be replaced now.

Continue printing with the current cartridge until redistributing the toner no longer yields acceptable print quality. To redistribute the toner, remove the toner cartridge from the printer and gently rock the cartridge back and forth end to end. Reinsert the toner cartridge into the printer and close the cover.

Cartridge is very low: The printer indicates when the toner cartridge level is very low. Actual toner cartridge life remaining may vary. To extend the life of the toner, gently rock the cartridges back and forth end to end. Consider having a replacement available to install when print quality is no longer acceptable. The toner cartridge does not need to be replaced now unless the print quality is no longer acceptable.

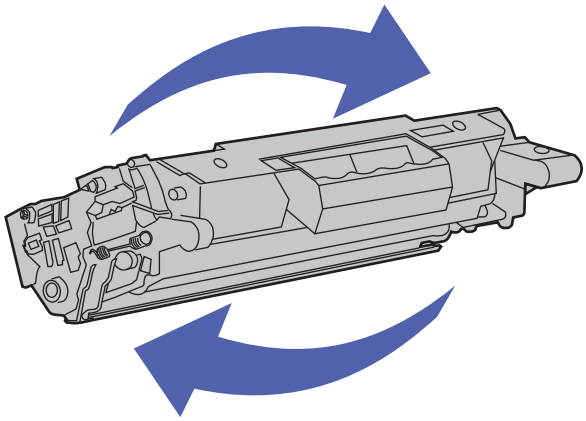

HP’s Premium Protection Warranty expires when a message indicating that HP’s Premium Protection Warranty on this supply has ended appears on the Supplies Status Page or the EWS.

Change the “Very Low” settings

You can change the way the printer reacts when supplies reach the Very Low state. You do not have to re-establish these settings when you install a new toner cartridge.

Change the "Very Low" settings from the control panel

Determine how the printer will notify you about very low cartridge levels.

1. At the printer control panel, use the interface up and down arrows to select the Menu option, and then press **OK**.
2. Use the interface to select Settings, and then press **OK**.
3. Use the interface to open the following menus:
   a. Supplies
   b. Very Low Behavior
   c. Black Cartridge

4. Use the interface to select one of the following options:

   - Select the Stop option to set the printer to stop printing until you replace the toner cartridge.
   - Select the Prompt option to set the printer to stop printing and prompt you to replace the toner cartridge. You can acknowledge the prompt and continue printing.
   - Select the Continue option to set the printer to alert you that the toner cartridge is very low, but to continue printing.

NOTE: The Low Threshold option allows you to define the level of ink that is considered very low.

Order supplies

Order supplies and paper for your HP printer.

Table 6-2 Options for ordering supplies

Ordering options	Contact information
Order supplies and paper	www.hp.com/go/suresupply
Order through service or support providers	Contact an HP-authorized service or support provider.
Order using the HP Embedded Web Server (EWS)	To access, in a supported web browser on your computer, enter the printer IP address or host name in the address/URL field. The EWS contains a link to the HP SureSupply website, which provides options for purchasing Original HP supplies.

Printer does not pick up paper or misfeeds

Review the following information about the printer not picking up paper or misfeeding paper.

Introduction

The following solutions can help solve problems if the printer is not picking up paper from the tray or is picking up multiple sheets of paper at one time. Either of these situations can result in paper jams.

The printer does not pick up paper

If the printer does not pick up paper from the tray, try these solutions.

1. Open the printer and remove any jammed sheets of paper. Verify that no torn remnants of paper remain inside of the printer.
2. Load the tray with the correct size of paper for the job.
3. Make sure the paper size and type are set correctly on the printer control panel.
4. Make sure the paper guides in the tray are adjusted correctly for the size of paper. Adjust the guides to the appropriate indentation in the tray. The arrow on the tray guide should line up exactly with the marking on the tray.

NOTE: Do not adjust the paper guides tightly against the paper stack. Adjust them to the indentations or markings in the tray.

The following image shows examples of the paper-size indentations in the trays. Most HP printers have markings similar to these.

Figure 6-1 Examples of size markings

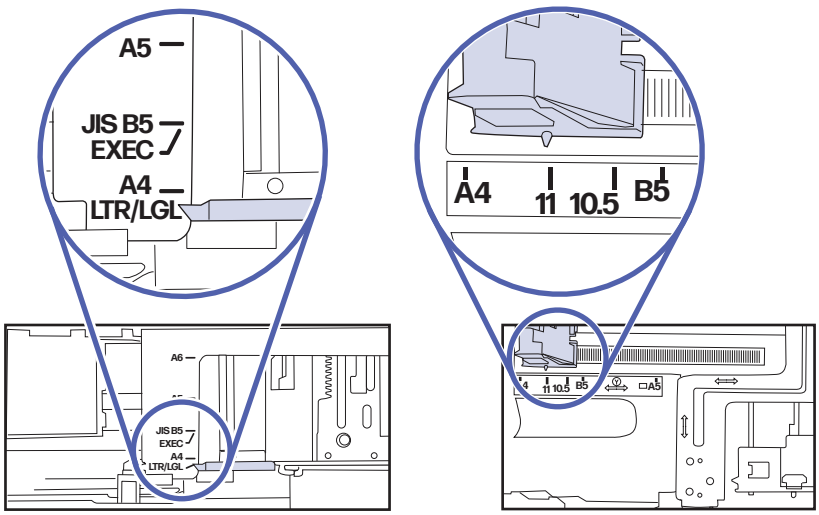

5. Verify that the humidity in the room is within specifications for this printer, and that paper is being stored in unopened packages. Most reams of paper are sold in moisture-proof wrapping to keep paper dry.

   In high-humidity environments, paper at the top of the stack in the tray can absorb moisture, and it might have a wavy or uneven appearance. If this happens, remove the top 5 to 10 sheets of paper from the stack.

In low-humidity environments, excess static electricity can cause sheets of paper to stick together. If this happens, remove the paper from the tray, and flex the stack by holding it at each end and bringing the ends up to form a U shape. Then, rotate the ends down to reverse the U shape. Next, hold each side of the stack of paper, and repeat this process. This process releases individual sheets without introducing static electricity. Straighten the paper stack against a table before returning it to the tray.

Figure 6-2 Technique for flexing the paper stack

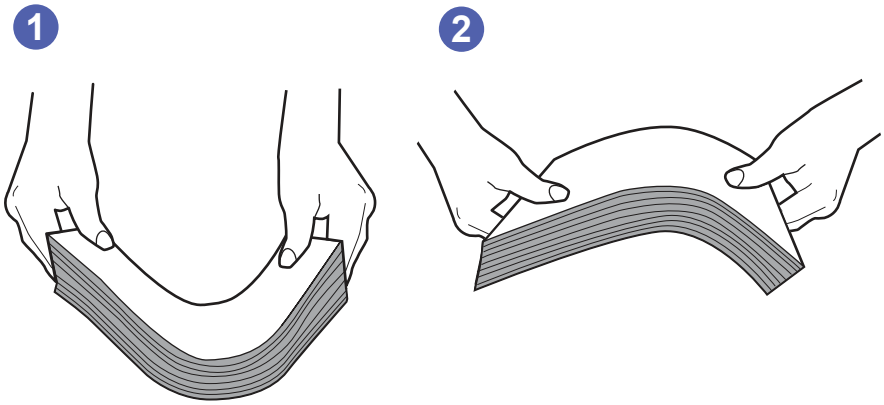

6. Check the printer control panel to see if it is displaying a prompt to feed the paper manually. Load paper, and continue.
7. The rollers above the tray might be contaminated. Clean the rollers with a lint-free cloth dampened with warm water. Use distilled water, if it is available.

⚠ **CAUTION:** Do not spray water directly on to the printer. Instead, spray water on the cloth or dab the cloth in water and wring it out before cleaning the rollers.

The following image shows examples of the roller location for various printers.

Figure 6-3 Roller locations for Tray 1 or the multipurpose tray

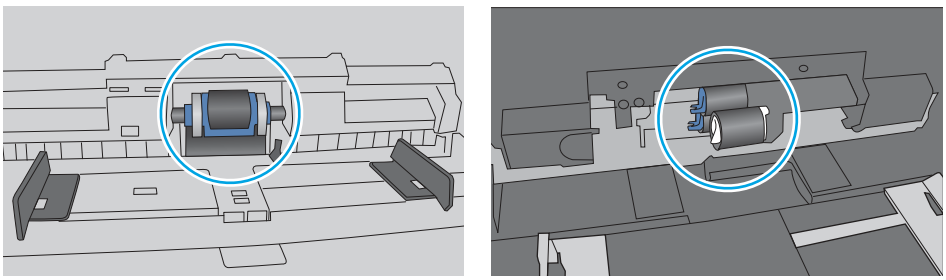

The printer picks up multiple sheets of paper

If the printer picks up multiple sheets of paper from the tray, try these solutions.

1. Remove the stack of paper from the tray and flex it, rotate it 180 degrees, and flip it over. *Do not fan the paper.* Return the stack of paper to the tray.

NOTE: Fanning the paper introduces static electricity. Instead of fanning the paper, flex the stack by holding it at each end and bringing the ends up to form a U shape. Then, rotate the ends down to reverse the U shape. Next, hold each side of the stack of paper, and repeat this process. This process releases individual sheets without introducing static electricity. Straighten the paper stack against a table before returning it to the tray.

Figure 6-4 Technique for flexing the paper stack

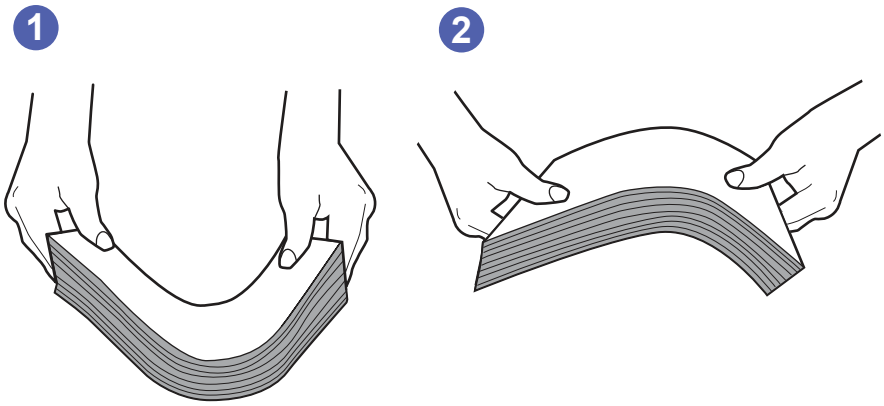

2. Use only paper that meets HP specifications for this printer.

3. Verify that the humidity in the room is within specifications for this printer, and that paper is being stored in unopened packages. Most reams of paper are sold in moisture-proof wrapping to keep paper dry.

   In high-humidity environments, paper at the top of the stack in the tray can absorb moisture, and it might have a wavy or uneven appearance. If this happens, remove the top 5 to 10 sheets of paper from the stack.

   In low-humidity environments, excess static electricity can cause sheets of paper to stick together. If this happens, remove the paper from the tray, and flex the stack as described above.

4. Use paper that is not wrinkled, folded, or damaged. If necessary, use paper from a different package.

5. Make sure the tray is not overfilled by checking the stack-height markings inside the tray. If it is overfilled, remove the entire stack of paper from the tray, straighten the stack, and then return some of the paper to the tray.

   The following images show examples of the stack-height markings in the trays for various printers. Most HP printers have markings similar to these. Also make sure that all sheets of paper are below the tabs near the stack-height marks. These tabs help hold the paper in the correct position as it enters the printer.

Figure 6-5 Stack height markings

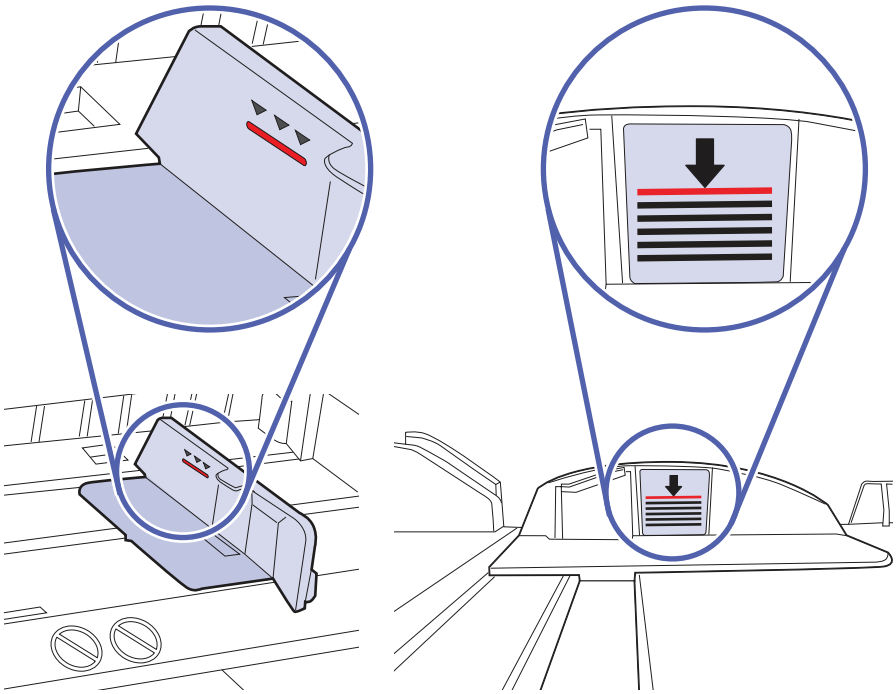

Figure 6-6 Tab for the paper stack

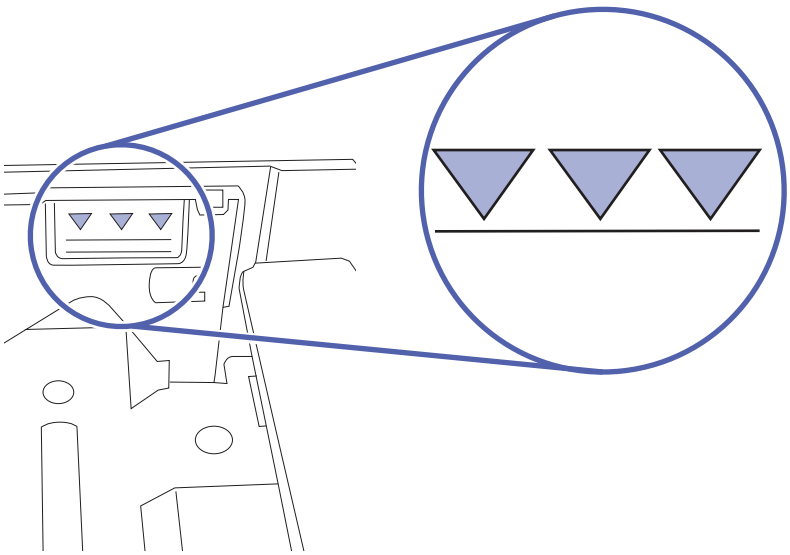

6. Make sure the paper guides in the tray are adjusted correctly for the size of paper. Adjust the guides to the appropriate indentation in the tray.
7. Make sure the printing environment is within recommended specifications.

Clear paper jams (4006, 4007, 4008)

Use the procedures in this section to clear jammed paper from the printer paper path.

NOTE: Images used might not reflect your exact model and configuration.

Paper jam locations

Jams can occur in these locations.

Figure 6-7 Paper jam locations

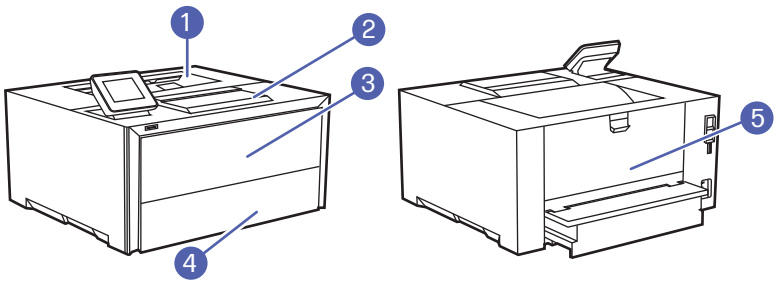

Number	Description
1	Output bin
2	Toner cartridge access door
3	Tray 1
4	Tray 2
5	Rear door/Duplexer

Experiencing frequent or recurring paper jams?

Follow the steps to solve problems with frequent paper jams. If the first step does not resolve the problem continue with the next step until you have resolved the problem.

1. If paper has jammed in the printer, clear the jam and then print a configuration page to test the printer.
2. Check that the tray is configured for the correct paper size and type on the printer control panel. Adjust paper settings if necessary.
   a. At the printer, use the control panel interface to select the Menu option, and then press **OK**.
   b. Use the control panel interface to select Trays, and then press the **OK**.
   c. Use the control panel interface to select the tray from the list.
   d. Use the control panel interface to select Paper Size, and then select the size of paper that is in the tray.
   e. Use the control panel interface to select Paper Type, and then select the type of paper that is in the tray.
3. Turn the printer off, wait 30 seconds, and then turn it on again.

4. Print a cleaning page to remove excess toner from inside the printer:
   a. At the printer, use the control panel interface to select the Menu option, and then press **OK**.
   b. Use the control panel interface to select Tools, and then press **OK**.
   c. Use the control panel interface to select the following items:
      i. Troubleshooting
      ii. Print Quality
      iii. Cleaning Page
5. Print a configuration page to test the printer:
   a. At the printer, use the control panel interface to select the Menu option, and then press **OK**.
   b. Use the control panel interface to select Tools, and then press **OK**.
   c. Use the control panel interface to select the following items:
      i. Reports
      ii. Status Reports
      iii. Configuration Report
   d. Use the control panel interface to select Print at the top of the list of reports, and then press **OK** to print the Configuration Page.

If none of these steps resolves the problem, the printer might need service. Contact HP customer support.

13.02 jam error in tray 1

Use the following procedure to clear paper jams in Tray 1.

Recommended action for customers

When a jam occurs, the control panel displays a message that assists in clearing the jam.

- **13.02.yz Paper jam in Tray 1**

Y and Z are variables and can be any of the following 0-9 or A-F.

View a video of how to clear a jam in Tray 1

1. Look inside Tray 1 and remove any jammed paper by pulling it straight out.

2. If you cannot see the jammed paper, open the toner cartridge access door (callout 1) and remove the toner cartridge (callout 2).

Callout 1: Open top cover.

Callout 2: Remove toner cartridge.

3. Lift the metal flap to access the jammed paper. Remove any jammed paper and close the metal flap.

4. With the top cover open, locate and clean the feed roller for Tray 1.

NOTE: Use a dampened lint-free cloth to clean the roller.

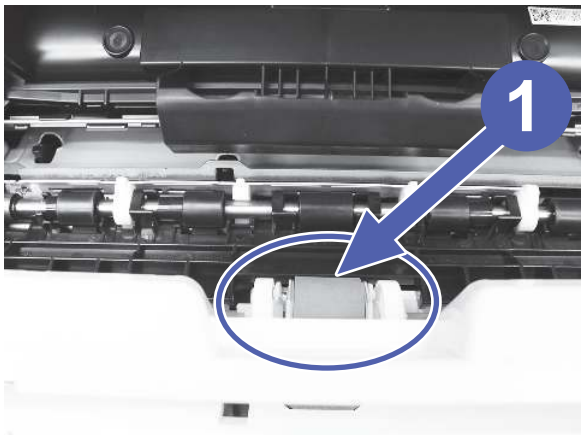

Callout 1: Tray 1 roller

5. Install the toner cartridge and close the top cover.
6. Make sure the type and quality of the paper being used meets the HP specifications for the printer.
7. Reopen Tray 1 and load the paper into the tray.
   - Ensure the tray is not overfilled. Paper should be below the detent in callout image.
   - Ensure the tray guides are set to the correct paper size.

   To adjust guides, press the adjust lever in the direction indicated (callout 1), and then move the guides to the desired paper size (callout 2).

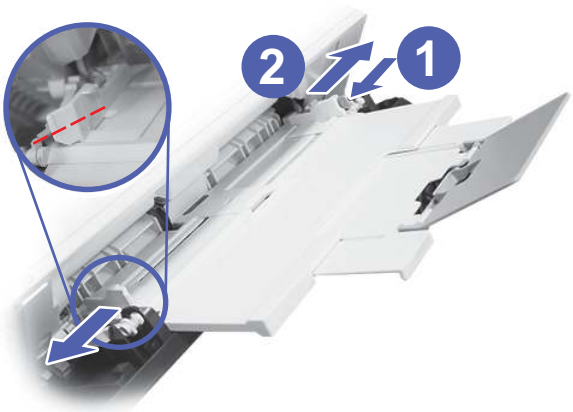

8. If the error persists, contact your HP-authorized service or support provider, or contact customer support at www.hp.com/go/contactHP.

13.03 jam error in tray 2

Use the following procedure to check for a paper jam in Tray 2.

Recommended action for customers

When a jam occurs, the control panel displays a message that assists in clearing the jam.

- **13.03.yz Paper jam in Tray 2**

Y and Z are variables and can be any of the following 0-9 or A-F.

View a video of how to clear a jam in Tray 2

1. Pull the tray completely out of the printer.

2. Remove any jammed or damaged sheets of paper.

3. Reinsert and close Tray 2.

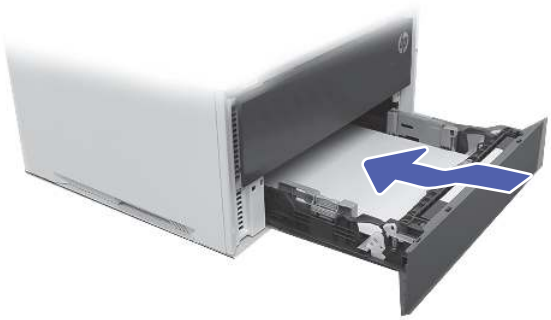

4. If you cannot see the jammed paper, open the toner cartridge access door (callout 1) and remove the toner cartridge (callout 2).

Callout 1: Open top cover.

Callout 2: Remove toner cartridge.

5. Lift the metal flap to access the jammed paper. Remove any jammed paper, and then close the metal flap.

6. Ensure the type and quality of the paper being used meets the HP specifications for the printer.

7. If the error persists, ensure the tray width and length guides match the paper size loaded in the tray and the tray is not over filled above the fill mark (line below triangles, callout 3). See the following image for guidance.

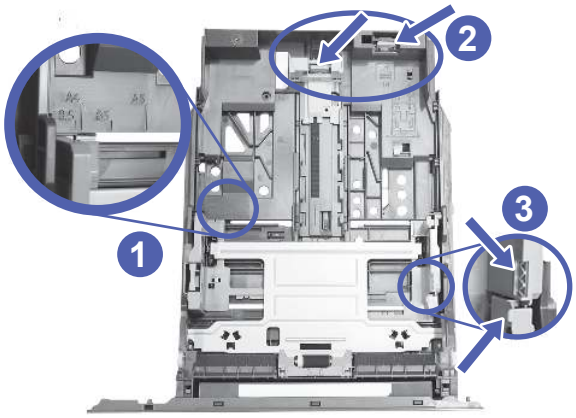

NOTE: When reinserting the paper, make sure the paper guides are adjusted properly for the paper size.

8. If the error persists, clean the tray pick, feed, and separation rollers.

   a. Remove Tray 2.

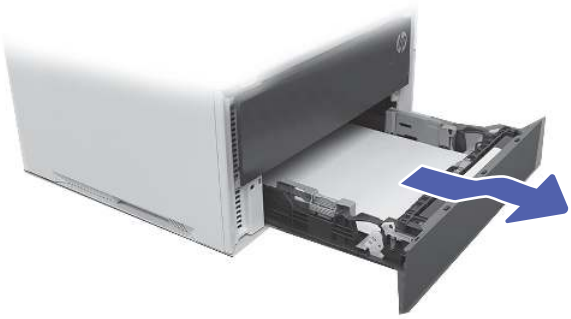

   b. Remove the tray roller assembly.

      Pull the tab forward (callout 1) and then slide the rollers in the indicated direction to remove it.

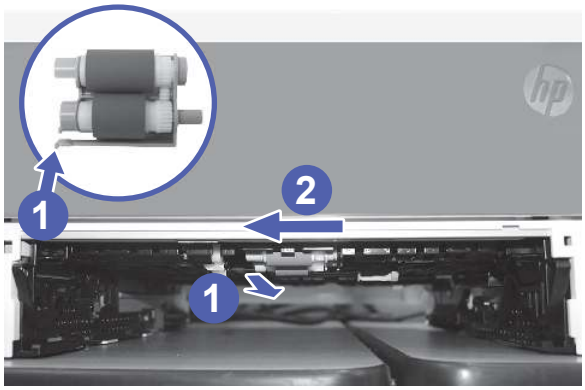

c. Clean the rollers with a dampened lint-free cloth.

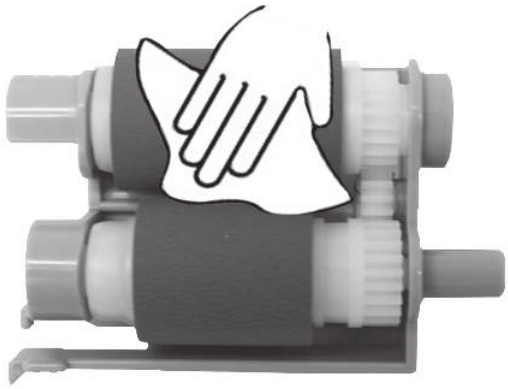

d. Reinstall the roller by sliding them back onto the shaft.

e. Install Tray 2.

f. Adjust the guides and install the paper.

9. If the error persists, contact your HP-authorized service or support provider, or contact customer support at www.hp.com/go/contactHP.

13.10, 13.11, 13.13 jam error in the output bin (SFP)

Use the following procedure to check for paper in all possible jam locations related to the output bin.

Recommended action for customers

When a jam occurs, the control panel displays an error message that assists in clearing the jam.

1. If paper is visible in the output bin, grasp the leading edge and remove it.

NOTE: The control panel on the printer might look different than the one in the image.

2. If the paper is difficult to remove, open the toner cartridge access door and the rear door, then remove the paper jam slowly.

3. If the paper cannot be removed, with the rear door open, remove the paper from there.

4. If the error persists, contact your HP-authorized service or support provider, or contact customer support at www.hp.com/go/contactHP.

13.08, 13.09, 13.14, or 13.15 Jam error in the rear door (SFP)

Use the following procedure to check for paper in all possible jam locations inside the rear door.

Recommended action for customers

When a jam occurs, the control panel displays a message that assists in clearing the jam.

- **13.08.yz Paper jam in rear door**
- **13.09.yz Paper jam in rear door**
- **13.14.yz Paper jam in rear door**
- **13.15.yz Paper jam in rear door**

Y and Z are variables and can be any of the following 0-9 or A-F.

1. Check the output area of the printer. If the paper is extending out, slowly pull it out of the printer.

2. If the paper is difficult to remove, open the toner cartridge access door and the rear door, then remove the jammed paper slowly.

3. Remove any jammed or damaged sheets of paper from the rear door of the printer.

CAUTION: The fuser is located above the rear door, and it is hot. Do not attempt to reach into the area above the rear door until the fuser is cool.

NOTE: Check all places inside the rear door for paper.

4. Close the rear door.
5. If the error persists, ensure the type and quality of the paper being used meets the HP specifications for the printer.
6. If the error persists, contact your HP-authorized service or support provider, or contact customer support at www.hp.com/go/contactHP.

13.08, 13.09, Jam error in the fuser area (SFP)

Use the following procedure to check for paper in all possible jam locations in the fuser area.

Recommended action for customers

When a jam occurs, the control panel displays a message that assists in clearing the jam.

- **Jam in rear door**

CAUTION: The fuser can be hot while the printer is in use. Wait for the fuser to cool before handling it.

1. Check the output area of the printer. If the paper is extending out, slowly pull it out of the printer.

2. Open the toner cartridge access door.

NOTE: Opening the cartridge door releases the fuser pressure roller and makes it easier to remove the jammed paper.

3. Open the rear door of the printer.

4. Remove any jammed or damaged sheets of paper from the rear door of the printer.

CAUTION: The fuser is located above the rear door, and it is hot. Do not attempt to reach into the area above the rear door until the fuser is cool.

NOTE: Check all places inside the rear door for paper.

If paper sticking out of the fuser cannot be removed from the printer through the output bin, grab both sides of the sheet and pull the page down, and then out of the printer.

5. Close the rear door.

6. If the error persists, ensure the type and quality of the paper being used meets the HP specifications for the printer.

7. If the error persists, contact your HP-authorized service or support provider, or contact customer support at www.hp.com/go/contactHP.

13.14, 13.15 jam error in the duplexer

Use the following procedure to check for paper in all possible jam locations in the duplex area.

Recommended action for customers

When a jam occurs, the control panel displays a message that assists in clearing the jam.

CAUTION: The fuser can be hot while the printer is in use. Wait for the fuser to cool before handling it.

1. Pull the tray completely out of the printer.

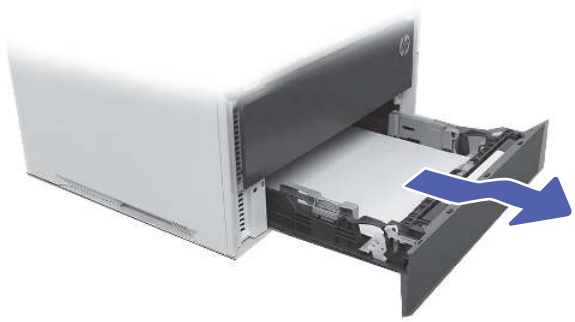

2. Remove any jammed or damaged sheets of paper seen.

3. If no paper is found, lower the duplex path tray.

4. Remove paper from duplex path as needed.

5. If no paper is found in the duplex tray area, open the toner cartridge access door.

NOTE: Opening the cartridge door releases the fuser pressure roller and makes it easier to remove the jammed paper.

6. Open the rear door.

7. Remove any jammed or damaged sheets of paper from the rear door of the printer.

CAUTION: The fuser is located above the rear door, and it is hot. Do not attempt to reach into the area above the rear door until the fuser is cool.

NOTE: Check all places inside the rear door for paper.

8. If the error persists, ensure the type and quality of the paper being used meets the HP specifications for the printer.

9. If the error persists, contact your HP-authorized service or support provider, or contact customer support at www.hp.com/go/contactHP.

Resolving mono print quality problems

Use the information below to troubleshoot print-quality and image-quality problems on mono (black and white) HP LaserJet Enterprise printers.

Introduction

The troubleshooting steps can help resolve the following defects:

- Blank pages
- Black pages
- Curled paper
- Dark or light bands
- Dark or light streaks
- Fuzzy print
- Gray background or dark print
- Light print
- Loose toner
- Missing toner
- Scattered dots of toner
- Skewed images
- Smears
- Streaks

Troubleshoot print quality

To resolve print-quality issues, try these steps in the order presented.

To troubleshoot specific image defects, see Troubleshoot image defects.

Update the printer firmware

Try upgrading the printer firmware.

For instructions, go to www.hp.com/support.

Print from a different software program

Try printing from a different software program.

If the page prints correctly, the problem is with the software program from which you were printing.

Check the paper-type setting for the print job

Check the paper type setting when printing from a software program and the printed pages have smears, fuzzy or dark print, curled paper, scattered dots of toner, loose toner, or small areas of missing toner.

Check the paper type setting on the control panel

Check the paper type setting on the printer control panel, and change the setting as needed.

1. Open and close the paper tray.
2. Follow the control panel prompts to confirm or modify the paper type and size settings for the tray.
3. Make sure the paper loaded meets specifications.
4. Adjust the humidity and resistance setting on the control panel to match the environment.
   a. Open the following menus:
      i. Settings
      ii. Print
      iii. Print Quality
      iv. Adjust Paper Type
   b. Select the paper type that matches the type loaded in the tray.
   c. Use the arrows to increase or decrease the humidity and resistance setting.
5. Make sure the driver settings match the control panel settings.

NOTE: The print driver settings will override any control panel settings.

Check the paper type setting (Windows)

Check the paper type setting for Windows, and change the setting as needed.

NOTE: The print driver settings will override any control panel settings.

1. From the software program, select the **Print** option.
2. Select the printer, and then click the **Properties** or **Preferences** button.
3. Click the **Paper/Quality** tab.
4. From the **Paper Type** drop-down list, click the **More...** option.
5. Expand the list of **Type is:** options.
6. Expand the category of paper types that best describes your paper.
7. Select the option for the type of paper you are using, and click the **OK** button.
8. Click the **OK** button to close the **Document Properties** dialog box. In the **Print** dialog box, click the **OK** button to print the job.

Check the paper type setting (macOS)

Check the paper type setting for macOS, and change the setting as needed.

1. Click the **File** menu, and then click the **Print** option.
2. In the **Printer** menu, select the printer.

3. By default, the print driver displays the **Copies & Pages** menu. Open the menus drop-down list, and then click the **Finishing** menu.

4. Select a type from the **Media Type** drop-down list.

5. Click the **Print** button.

Check toner-cartridge status

Follow these steps to check the estimated life remaining in the toner cartridges and if applicable, the status of other replaceable maintenance parts.

Step one: Print the Supplies Status Page

The supplies status page indicates the cartridge status.

1. From the Home screen on the printer control panel, select the Reports menu.

2. Select the Configuration/Status Pages menu.

3. Select Supplies Status Page, and then select Print to print the page.

Step two: Check supplies status

Check the supplies status report as follows.

1. Look at the supplies status report to check the percent of life remaining for the toner cartridges and, if applicable, the status of other replaceable maintenance parts.

   Print quality problems can occur when using a toner cartridge that is at its estimated end of life. The supplies status page indicates when a supply level is very low. After an HP supply has reached the very low threshold, HP's premium protection warranty on that supply has ended.

   The toner cartridge does not need to be replaced now unless the print quality is no longer acceptable. Consider having a replacement available to install when print quality is no longer acceptable.

   If you determine that you need to replace a toner cartridge or other replaceable maintenance parts, the supplies status page lists the genuine HP part numbers.

2. Check to see if you are using a genuine HP cartridge.

   A genuine HP toner cartridge has the word "HP" on it, or has the HP logo on it. For more information on identifying HP cartridges go to www.hp.com/go/learnaboutsupplies.

Print a cleaning page

During the printing process paper, toner, and dust particles can accumulate inside the printer and can cause print-quality issues such as toner specks or spatter, smears, streaks, lines, or repeating marks.

Follow these steps to clean the printer paper path:

1. From the Home screen on the printer control panel, select the Support Tools menu.

2. Select the following menus:

   a. Maintenance

   b. Calibration/Cleaning

   c. Cleaning Page

3. Select Print to print the page.

   A **Cleaning...** message displays on the printer control panel. The cleaning process takes a few minutes to complete. Do not turn the printer off until the cleaning process has finished. When it is finished, discard the printed page.

Visually inspect the toner cartridge or cartridges

Follow these steps to inspect each toner cartridge:

1. Remove the toner cartridge from the printer, and verify that the sealing tape has been removed.
2. Check the memory chip for damage.
3. Examine the surface of the green imaging drum.

   ⚠ **CAUTION:** Do not touch the imaging drum. Fingerprints on the imaging drum can cause print-quality problems.

4. If you see any scratches, fingerprints, or other damage on the imaging drum, replace the toner cartridge.
5. Reinstall the toner cartridge and print a few pages to see if the problem has resolved.

Check paper and the printing environment

Use the following information to check the paper selection and the printing environment.

Step one: Use paper that meets HP specifications

Some print-quality problems arise from using paper that does not meet HP specifications.

- Always use a paper type and weight that this printer supports.
- Use paper that is of good quality and free of cuts, nicks, tears, spots, loose particles, dust, wrinkles, voids, staples, and curled or bent edges.
- Use paper that has not been previously printed on.
- Use paper that does not contain metallic material, such as glitter.
- Use paper that is designed for use in laser printers. Do not use paper that is designed only for use in Inkjet printers.
- Use paper that is not too rough. Using smoother paper generally results in better print quality.

Step two: Check the environment

The environment can directly affect print quality and is a common cause of print-quality or paper-feeding issues. Try the following solutions:

- Move the printer away from drafty locations, such as open windows or doors, or air-conditioning vents.
- Make sure the printer is not exposed to temperatures or humidity outside of printer specifications.
- Do not place the printer in a confined space, such as a cabinet.
- Place the printer on a sturdy, level surface.

- Remove anything that is blocking the vents on the printer. The printer requires good air flow on all sides, including the top.
- Protect the printer from airborne debris, dust, steam, grease, or other elements that can leave residue inside the printer.

Step three: Set the individual tray alignment

Follow these steps when text or images are not centered or aligned correctly on the printed page when printing from specific trays.

1. From the Home screen on the printer control panel, select the Settings menu.
2. Select the following menus:
   a. Print
   b. Print Quality
   c. Image Registration
3. Select Tray, and then select the tray to adjust.
4. Select Print Test Page, and then follow the instructions on the printed pages.
5. Select Print Test Page again to verify the results, and then make further adjustments if necessary.
6. Select Done to save the new settings.

Try a different print driver

Try a different print driver when printing from a software program and the printed pages have unexpected lines in graphics, missing text, missing graphics, incorrect formatting, or substituted fonts.

Download a different print driver from the HP support Web site: http://www.hp.com/support/ljpro4000.

Check the EconoMode settings

HP does not recommend the full-time use of EconoMode. If EconoMode is used full-time, the toner supply might outlast the mechanical parts in the toner cartridge. If print quality begins to degrade and is no longer acceptable, consider replacing the toner cartridge.

NOTE: This feature is available with the PCL 6 print driver for Windows. If you are not using that driver, you can enable the feature by using the HP Embedded Web Server.

Follow these steps if the entire page is too dark or too light.

1. From the software program, select the **Print** option.
2. Select the printer, and then click the **Properties** or **Preferences** button.
3. Click the **Paper/Quality** tab, and locate the **Print Quality** area.
4. If the entire page is too dark, use these settings:
   - Select the **600 dpi** option, if available.
   - Select the **EconoMode** check box to enable it.

   If the entire page is too light, use these settings:

- Select the **FastRes 1200** option, if available.
- Clear the **EconoMode** check box to disable it.

5. Click the **OK** button to close the **Document Properties** dialog box. In the **Print** dialog, click the **OK** button to print the job.

Adjust print density

Complete the following steps to adjust the print density.

1. From the Home screen on the printer control panel, select the Settings menu.
2. Open the following menus:
   a. Copy/Print or Print
   b. Print Quality
   c. Toner Density
3. Move the slider toward either Less or More to the desired density setting.

Troubleshoot image defects

Review examples of image defects and steps to resolve these defects.

Table 6-3 Image defects table quick reference

Sample	Description	Possible solutions
Table 6-10 Light print on page 105	Table 6-8 Gray background or dark print on page 104	Table 6-6 Blank page – No print on page 103 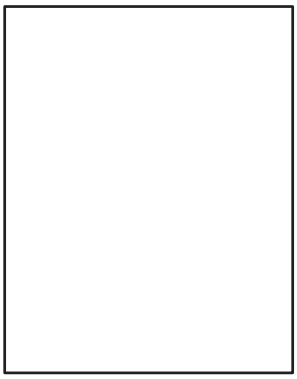

Table 6-3 Image defects table quick reference (continued)

Sample	Description	Possible solutions
Table 6-5 Black page on page 102	Table 6-4 Banding defects on page 102	Table 6-12 Streak defects on page 106
	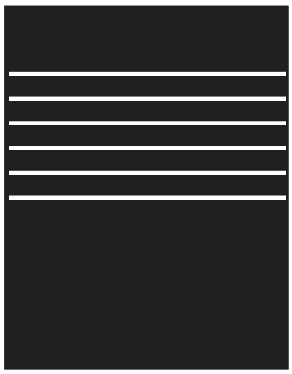	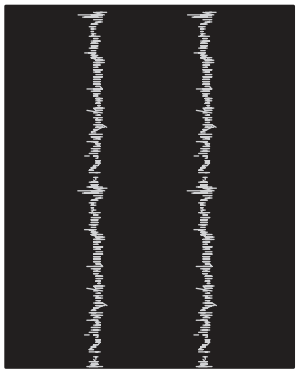
Table 6-7 Fixing/fuser defects on page 103	Table 6-9 Image placement defects on page 104	Table 6-11 Output defects on page 105
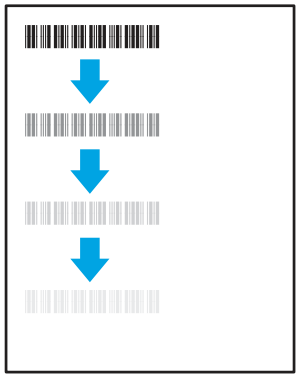		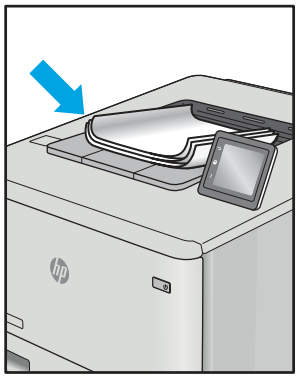

Image defects, no matter the cause, can often be resolved using the same steps. Use the following steps as a starting point for solving image defect issues.

1. Reprint the document. Print quality defects can be intermittent in nature or can go away completely with continued printing.
2. Check the condition of the cartridge or cartridges. If a cartridge is in a **Very Low** state (it has passed the rated life), replace the cartridge.
3. Make sure that the driver and tray print mode settings match the media that is loaded in the tray. Try using a different ream of media or a different tray. Try using a different print mode.
4. Make sure that the printer is within the supported operating temperature/humidity range.

5. Make sure that the paper type, size, and weight are supported by the printer. See support.hp.com for a list of the supported paper sizes and types for the printer.

NOTE: The term "fusing" refers to the part of the printing process where toner is affixed to paper.

The following examples depict letter-size paper that has passed through the printer short edge first.

Table 6-4 Banding defects

Sample	Description	Possible solutions
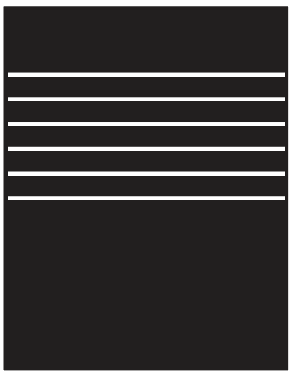	Dark or light lines which repeat down the length of the page, and are wide-pitch and/or impulse bands. They might be sharp or soft in nature. The defect displays only in areas of fill, not in text or sections with no printed content.	1. Reprint the document. 2. Try printing from another tray. 3. Replace the cartridge. 4. Use a different paper type. 5. **Enterprise models only:** From the Home screen on the printer control panel, go to the Adjust Paper Types menu, and then choose a print mode that is designed for a slightly heavier media than what you are using. This slows the print speed and might improve the print quality. 6. If the issue persists, go to support.hp.com.

Table 6-5 Black page

Sample	Description	Possible solutions
	The entire printed page is black.	1. Visually inspect the cartridge to check for damage. 2. Make sure that the cartridge is installed correctly. 3. Replace the cartridge. 4. If the issue persists, go to support.hp.com.

Table 6-6 **Blank page – No print**

Sample	Description	Possible solutions
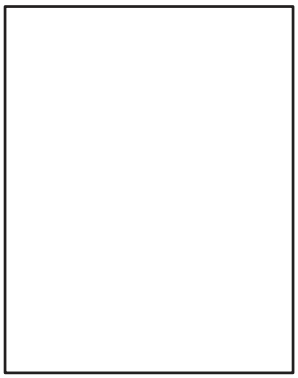	The page is completely blank and contains no printed content.	1. Make sure that the cartridges are genuine HP cartridges. 2. Make sure that the cartridge is installed correctly. 3. Print with a different cartridge. 4. Check the paper type in the paper tray and adjust the printer settings to match. If necessary, select a lighter paper type. 5. If the issue persists, go to support.hp.com.

Table 6-7 **Fixing/fuser defects**

Sample	Description	Possible solutions
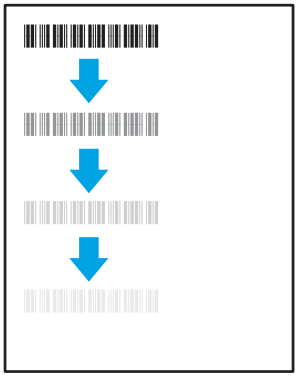	Slight shadows or offsets of the image are repeated down the page. The repeated image might fade with each recurrence.	1. Reprint the document. 2. Check the paper type in the paper tray and adjust the printer settings to match. If necessary, select a lighter weight paper type. 3. If the issue persists, go to support.hp.com.
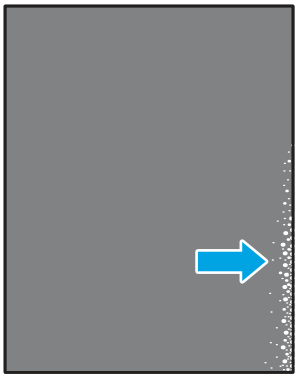	Toner rubs off along either edge of the page. This defect is more common at the edges of high-coverage jobs, and on light media types, but can occur anywhere on the page.	1. Reprint the document. 2. Check the paper type in the paper tray and adjust the printer settings to match. If necessary, select a heavier paper type. 3. **Enterprise models only:** From the printer control panel, go to the Edge-to-Edge menu and then select Normal. Reprint the document. 4. **Enterprise models only:** From the printer control panel, select Auto Include Margins and then reprint the document. 5. If the issue persists, go to support.hp.com.

Table 6-8 Gray background or dark print

Sample	Description	Possible solutions
	The image or text is darker than expected and/or the background is gray.	1. Make sure that the paper in the trays has not already been run through the printer. 2. Use a different paper type. 3. Reprint the document. 4. **Mono models only:** From the Home screen on the printer control panel, go to the Adjust Toner Density menu, and then adjust the toner density to a lower level. 5. Make sure that the printer is within the supported operating temperature and humidity range. 6. Replace the cartridge. 7. If the issue persists, go to support.hp.com.

Table 6-9 Image placement defects

Sample	Description	Possible solutions
	The image is not centered, or is skewed on the page. The defect occurs when the paper is not positioned properly as it is pulled from the tray and moves through the paper path.	1. Reprint the document. 2. Remove the paper and then reload the tray. Make sure that all the paper edges are even on all sides. 3. Make sure that the top of the paper stack is below the tray-full indicator. Do not overfill the tray. 4. Make sure that the paper guides are adjusted to the correct size for the paper. Do not adjust the paper guides tightly against the paper stack. Adjust them to the indentations or markings in the tray. 5. If the issue persists, go to support.hp.com.

Table 6-10 **Light print**

Sample	Description	Possible solutions
	The printed content is light or faded on the entire page.	1. Reprint the document. 2. Remove the cartridge, and then shake it to redistribute the toner. Reinsert the toner cartridges into the printer and close the cover. For a graphical representation of this procedure, see *Replace the toner cartridges*. 3. **Mono models only:** Make sure that the EconoMode setting is disabled, both at the printer control panel and in the print driver. 4. Make sure that the cartridge is installed correctly. 5. Print a Supplies Status Page and check the life and usage of the cartridge. 6. Replace the cartridge. 7. If the issue persists, go to support.hp.com.

Table 6-11 **Output defects**

Sample	Description	Possible solutions
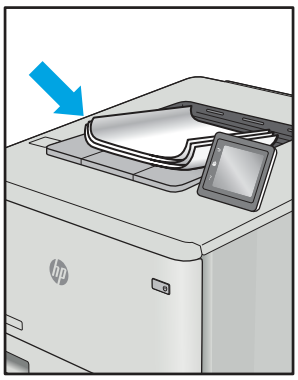	Printed pages have curled edges. The curled edge can be along the short or long side of the paper. Two types of curl are possible: • **Positive curl:** The paper curls toward the printed side. The defect occurs in dry environments or when printing high-coverage pages. • **Negative curl:** The paper curls away from the printed side. The defect occurs in high-humidity environments or when printing low-coverage pages.	1. Reprint the document. 2. **Positive curl:** From the printer control panel, select a heavier paper type. The heavier paper type creates a higher temperature for printing. **Negative curl:** From the printer control panel, select a lighter paper type. The lighter paper type creates a lower temperature for printing. Try storing the paper in a dry environment prior to use, or use freshly opened paper. 3. Print in duplex mode. 4. If the issue persists, go to support.hp.com.

Table 6-11 Output defects (continued)

Sample	Description	Possible solutions
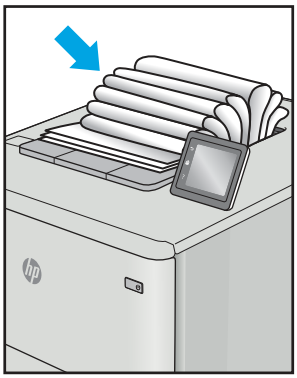	The paper does not stack well in the output tray. The stack might be uneven, skewed, or the pages might be pushed out of the tray and onto the floor. Any of the following conditions can cause this defect: • Extreme paper curl • The paper in the tray is wrinkled or deformed • The paper is a non-standard paper type, such as envelopes • The output tray is too full	1. Reprint the document. 2. Extend the output bin extension. 3. If the defect is caused by extreme paper curl, refer to the troubleshooting steps for "Output curl." 4. Use a different paper type. 5. Use freshly opened paper. 6. Remove the paper from the output tray before the tray gets too full. 7. If the issue persists, go to support.hp.com.

Table 6-12 Streak defects

Sample	Description	Possible solutions
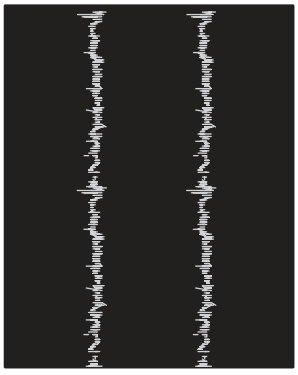	Light vertical streaks that usually span the length of the page. The defect displays only in areas of fill, not in text or sections with no printed content.	1. Reprint the document. 2. Remove the cartridge, and then shake it to redistribute the toner. Reinsert the toner cartridges into the printer and close the cover. For a graphical representation of this procedure, see *Replace the toner cartridges*. 3. If the issue persists, go to support.hp.com. **NOTE:** Both light and dark vertical streaks can occur when the printing environment is outside the specified range for temperature or humidity. Refer to your printer's environmental specifications for allowable temperature and humidity levels.

Table 6-12 Streak defects (continued)

Sample	Description	Possible solutions
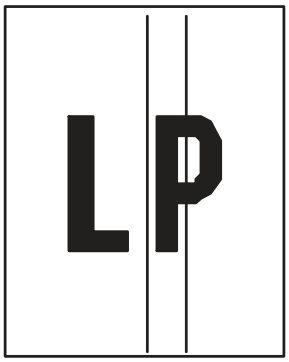	Dark vertical lines which occur down the length of the page. The defect might occur anywhere on the page, in areas of fill or in sections with no printed content.	1. Reprint the document. 2. Remove the cartridge, and then shake it to redistribute the toner. Reinsert the toner cartridges into the printer and close the cover. For a graphical representation of this procedure, see *Replace the toner cartridges*. 3. Print a cleaning page. 4. Check the toner level in the cartridge. 5. If the issue persists, go to support.hp.com.

Advanced troubleshooting: Resolve print quality issues using System Health Apps

To obtain assistance for print quality issues, use the System Health Apps on the printer control panel.

For more information on advanced print quality troubleshooting, go to HP Support, and then search for HP System Health Apps or HP Print Quality Diagnostics.

Solve wired network problems

Check the following information to resolve wired network issues.

Introduction

Certain types of problems can indicate there is a network communication problem. These problems include the following issues:

Poor physical connection

Check the cable connections.

1. Verify that the printer is attached to the correct network port using a cable of the correct length.
2. Verify that cable connections are secure.
3. Look at the network port connection on the rear of the printer, and verify that the amber activity light flashes indicating network traffic, and the green link-status light is continuously lit indicating a network link.
4. If the problem continues, try a different cable or port on the hub.

The computer is using the incorrect IP address for the printer

If the computer is using the incorrect IP address for the printer, try these solutions.

1. Open the printer properties and click the **Ports** tab. Verify that the current IP address for the printer is selected. The printer IP address is listed on the printer configuration page.
2. If you installed the printer using the HP standard TCP/IP port, select the check box next to **Always print to this printer, even if its IP address changes**.
3. If you installed the printer using a Microsoft standard TCP/IP port, use the hostname instead of the IP address.
4. If the IP address is correct, delete the printer and then add it again.

The computer is unable to communicate with the printer

Verify that the printer is communicating with the network and your computer.

1. Test network communication by pinging the network.
   a. Open a command-line prompt on your computer.
      - For Windows, click **Start**, click **Run**, type `cmd`, and then press Enter.
      - For macOS, go to **Applications**, then **Utilities**, and open **Terminal**.
   b. Type `ping` followed by the IP address for your printer.
   c. If the window displays round-trip times, the network is working.
2. If the ping command failed, verify that the network hubs are on, and then verify that the network settings, the printer, and the computer are all configured for the same network (also known as subnet).

3. If the network is working, make sure that the computer is using the correct IP address for the printer.
   a. Open the printer properties and click the **Ports** tab. Verify that the current IP address for the printer is selected. The printer IP address is listed on the printer configuration page.
   b. If you installed the printer using the HP standard TCP/IP port, select the box labeled **Always print to this printer, even if its IP address changes**.
   c. If you installed the printer using a Microsoft standard TCP/IP port, use the printer's hostname instead of the IP address.
   d. If the IP address is correct, delete the printer and then add it again.

The printer is using incorrect link and duplex settings for the network

HP recommends leaving these settings in automatic mode (the default setting). If you change these settings, you must also change them for your network.

New software programs might be causing compatibility problems

Verify that any new software programs are correctly installed and that they use the correct print driver.

The computer or workstation might be set up incorrectly

An incorrectly configured computer can cause issues with printing.

1. Check the network drivers, print drivers, and the network redirection settings.
2. Verify that the operating system is configured correctly.

The printer is disabled, or other network settings are incorrect

Check the network settings.

1. Review the printer's configuration/networking pages to check the status of the network settings and protocols.
2. Reconfigure the network settings if necessary.

Solve wireless network problems

To resolve network issues, try these steps in the order presented.

Introduction

Use the troubleshooting information to help resolve issues.

NOTE: To determine whether Wi-Fi Direct printing is enabled on your printer, print a configuration page from the printer control panel

Wireless connectivity checklist

Review the following information to check wireless connectivity.

- Verify that the network cable is not connected.
- Verify that the printer and the wireless router are turned on and have power. Also make sure that the wireless radio in the printer is turned on.
- Verify that the service set identifier (SSID) is correct. Print a configuration page to determine the SSID. If you are not sure the SSID is correct, run the wireless setup again.
- With secured networks, verify that the security information is correct. If the security information is incorrect, run the wireless setup again.
- If the wireless network is working correctly, try accessing other computers on the wireless network. If the network has Internet access, try connecting to the Internet over a wireless connection.
- Verify that the encryption method (AES or TKIP) is the same for the printer as it is for the wireless access point (on networks using WPA security).
- Verify that the printer is within the range of the wireless network. For most networks, the printer must be within 30 m (100 ft) of the wireless access point (wireless router).
- Verify that obstacles do not block the wireless signal. Remove any large metal objects between the access point and the printer. Make sure poles, walls, or support columns containing metal or concrete do not separate the printer and wireless access point.
- Verify that the printer is located away from electronic devices that might interfere with the wireless signal. Many devices can interfere with the wireless signal including motors, cordless phones, security system cameras, other wireless networks, and some Bluetooth devices.
- Verify that the print driver is installed on the computer.
- Verify that you have selected the correct printer port.
- Verify that the computer and printer connect to the same wireless network.
- For macOS, verify that the wireless router supports Bonjour.

The printer does not print after the wireless configuration completes

If the printer does not print after the wireless configuration completes, try these solutions.

1. Make sure that the printer is turned on and in the ready state.
2. Turn off any third-party firewalls on your computer.

3. Make sure that the wireless network is working correctly.
4. Make sure that your computer is working correctly. If necessary, restart the computer.
5. Verify that you can open the printer HP Embedded Web Server from a computer on the network.

The printer does not print, and the computer has a third-party firewall installed

If the printer does not print, and the computer has a third-party firewall installed, try these solutions.

1. Update the firewall with the most recent update available from the manufacturer.
2. If programs request firewall access when you install the printer or try to print, make sure you allow the programs to run.
3. Temporarily turn off the firewall, and then install the wireless printer on the computer. Enable the firewall when you have completed the wireless installation.

The wireless connection does not work after moving the wireless router or printer

If the wireless connection does not work after moving the wireless router or printer, try these solutions.

1. Make sure that the router or printer connects to the same network that your computer connects to.
2. Print a configuration page.
3. Compare the service set identifier (SSID) on the configuration page to the SSID in the printer configuration for the computer.
4. If the numbers are not the same, the devices are not connecting to the same network. Reconfigure the wireless setup for the printer.

Cannot connect more computers to the wireless printer

If additional computers cannot connect to the wireless printer, try these solutions.

1. Make sure that the other computers are within the wireless range and that no obstacles block the signal. For most networks, the wireless range is within 30 m (100 ft) of the wireless access point.
2. Make sure that the printer is turned on and in the ready state.
3. Make sure there are not more than 5 concurrent Wi-Fi Direct users.
4. Turn off any third-party firewalls on your computer.
5. Make sure that the wireless network is working correctly.
6. Make sure that your computer is working correctly. If necessary, restart the computer.

The wireless printer loses communication when connected to a VPN

Typically, you cannot connect to a VPN and other networks at the same time.

The network does not appear in the wireless networks list

If the network does not appear in the wireless networks list, try these solutions.

- Make sure the wireless router is turned on and has power.

- The network might be hidden. However, you can still connect to a hidden network.

The wireless network is not functioning

If the wireless network is not functioning, try these solutions.

1. Make sure that the network cable is not connected.
2. To verify if the network has lost communication, try connecting other devices to the network.
3. Test network communication by pinging the network.
   a. Open a command-line prompt on your computer.
      - For Windows, click **Start**, click **Run**, type `cmd`, and then press Enter.
      - For macOS, go to **Applications**, then **Utilities**, and open **Terminal**.
   b. Type `ping` followed by the router IP address.
   c. If the window displays round-trip times, the network is working.
4. Make sure that the router or printer connects to the same network that the computer connects to.
   a. Print a configuration page.
   b. Compare the service set identifier (SSID) on the configuration report to the SSID in the printer configuration for the computer.
   c. If the numbers are not the same, the devices are not connecting to the same network. Reconfigure the wireless setup for the printer.

Perform a wireless network diagnostic test

From the printer control panel, you can run a diagnostic test that provides information about the wireless network settings.

1. From the Home screen on the printer control panel, touch the Menu icon, and then touch Settings.
2. Scroll to and touch Network Reports.
3. Scroll to and touch Print Wi-Fi Test Report.

   The printer prints a test page that shows test results.

Reduce interference on a wireless network

The following tips can reduce interference in a wireless network:

- Keep the wireless devices away from large metal objects, such as filing cabinets, and other electromagnetic devices, such as microwaves and cordless telephones. These objects can disrupt radio signals.
- Keep the wireless devices away from large masonry structures and other building structures. These objects can absorb radio waves and lower signal strength.
- Position the wireless router in a central location in line of sight with the wireless printers on the network.

A Service and support

HP limited warranty statement

HP PRODUCT	DURATION OF LIMITED WARRANTY*
HP LaserJet Pro 4006dw, 4007dw, 4008dw	One-year, next-business day, onsite warranty

NOTE: *Warranty and support options vary by product, country, and local legal requirements. Go to support.hp.com to learn about HP award-winning service and support options in your region.

HP warrants to you, the end-user customer, this HP Limited Warranty applies only to HP branded products sold or leased a) from HP Inc., its subsidiaries, affiliates, authorized resellers, authorized distributors, or country distributors; and, b) with this HP Limited Warranty, that HP hardware and accessories will be free from defects in materials and workmanship after the date of purchase, for the period specified above. If HP receives notice of such defects during the warranty period, HP will, at its option, either repair or replace products which prove to be defective. Replacement products may be either new or equivalent in performance to new.

HP warrants to you that HP software will not fail to execute its programming instructions after the date of purchase, for the period specified above, due to defects in material and workmanship when properly installed and used. If HP receives notice of such defects during the warranty period, HP will replace software which does not execute its programming instructions due to such defects.

HP does not warrant that the operation of HP products will be uninterrupted or error free. If HP is unable, within a reasonable time, to repair or replace any product to a condition as warranted, you will be entitled to a refund of the purchase price upon prompt return of the product.

HP products may contain remanufactured parts equivalent to new in performance or may have been subject to incidental use.

Warranty does not apply to defects resulting from (a) improper or inadequate maintenance or calibration, (b) software, interfacing, parts or supplies not supplied by HP, (c) unauthorized modification or misuse, (d) operation outside of the published environmental specifications for the product, or (e) improper site preparation or maintenance.

TO THE EXTENT ALLOWED BY LOCAL LAW, THE ABOVE WARRANTIES ARE EXCLUSIVE AND NO OTHER WARRANTY OR CONDITION, WHETHER WRITTEN OR ORAL, IS EXPRESSED OR IMPLIED AND HP SPECIFICALLY DISCLAIMS ANY IMPLIED WARRANTIES OR CONDITIONS OF MERCHANTABILITY, SATISFACTORY QUALITY, AND FITNESS FOR A PARTICULAR PURPOSE. Some countries/regions, states or provinces do not allow limitations on the duration of an implied warranty, so the above limitation or exclusion might not apply to you. This warranty gives you specific legal rights and you might also have other rights that vary from country/region to country/region, state to state, or province to province.

HP's limited warranty is valid in any country/region or locality where HP has a support presence for this product and where HP has marketed this product. The level of warranty service you receive may vary according to local standards. HP will not alter form, fit or function of the product to make it operate in a country/region for which it was never intended to function for legal or regulatory reasons.

TO THE EXTENT ALLOWED BY LOCAL LAW, THE REMEDIES IN THIS WARRANTY STATEMENT ARE YOUR SOLE AND EXCLUSIVE REMEDIES. EXCEPT AS INDICATED ABOVE, IN NO EVENT WILL HP OR ITS SUPPLIERS BE LIABLE FOR LOSS OF DATA OR FOR DIRECT, SPECIAL, INCIDENTAL, CONSEQUENTIAL (INCLUDING LOST PROFIT OR DATA), OR OTHER DAMAGE, WHETHER BASED IN CONTRACT, TORT, OR OTHERWISE. Some countries/regions, states or provinces do not allow the exclusion or limitation of incidental or consequential damages, so the above limitation or exclusion may not apply to you.

THE WARRANTY TERMS CONTAINED IN THIS STATEMENT, EXCEPT TO THE EXTENT LAWFULLY PERMITTED, DO NOT EXCLUDE, RESTRICT OR MODIFY AND ARE IN ADDITION TO THE MANDATORY STATUTORY RIGHTS APPLICABLE TO THE SALE OF THIS PRODUCT TO YOU.

UK, Ireland, and Malta

The HP Limited Warranty is a commercial guarantee voluntarily provided by HP. The name and address of the HP entity responsible for the performance of the HP Limited Warranty in your country/region is as follows:

UK: HP Inc UK Limited, Earley West, 300 Thames Valley Park Drive, Reading, RG6 1PT, United Kingdom

Ireland: HP Technology Ireland Limited, Liffey Valley Office Campus, 1st FLOOR, BLOCK B Quarryvale, Co. Dublin D22 X0Y3 Ireland

Malta: HP Europe B.V., Amsterdam, Meyrin Branch, Route du Nant-d'Avril 150, 1217 Meyrin, Switzerland

United Kingdom: The HP Limited Warranty benefits apply in addition to any legal rights to a guarantee from seller of nonconformity of goods with the contract of sale. These rights expire six years from delivery of goods for products purchased in England or Wales and five years from delivery of goods for products purchased in Scotland. However various factors may impact your eligibility to receive these rights. For further information, please consult the following link: Consumer Legal Guarantee (http://www.hp.com/go/eu-legal) or you may visit the European Consumer Centers website (https://commission.europa.eu/live-work-travel-eu/consumer-rights-and-complaints/resolve-your-consumer-complaint/european-consumer-centres-network-ecc-net). Consumers have the right to choose whether to claim service under the HP Limited Warranty or against the seller under the legal guarantee.

Ireland: The HP Limited Warranty benefits apply in addition to any statutory rights from seller in relation to nonconformity of goods with the contract of sale. However various factors may impact your eligibility to receive these rights. Consumer statutory rights are not limited or affected in any manner by HP Care Pack. For further information, please consult the following link: Consumer Legal Guarantee (www.hp.com/go/eu-legal) or you may visit the European Consumer Centers website (https://commission.europa.eu/live-work-travel-eu/consumer-rights-and-complaints/resolve-your-consumer-complaint/european-consumer-centres-network-ecc-net). Consumers have the right to choose whether to claim service under the HP Limited Warranty or against the seller under the legal guarantee.

Malta: The HP Limited Warranty benefits apply in addition to any legal rights to a two-year guarantee from seller of nonconformity of goods with the contract of sale; however various factors may impact your eligibility to receive these rights. Consumer statutory rights are not limited or affected in any manner by the HP Limited Warranty. For further information, please consult the following link: Consumer Legal Guarantee (www.hp.com/go/eu-legal) or you may visit the European Consumer Centers website (https://commission.europa.eu/live-work-travel-eu/consumer-rights-and-complaints/resolve-your-consumer-complaint/european-consumer-centres-network-ecc-net). Consumers have the right to choose whether to claim service under the HP Limited Warranty or against the seller under two-year legal guarantee.

Austria, Belgium, Germany, Luxembourg. and Switzerland

Die beschränkte HP Herstellergarantie ist eine von HP auf freiwilliger Basis angebotene kommerzielle Garantie. Der Name und die Adresse der HP Gesellschaft, die in Ihrem Land für die Gewährung der beschränkten HP Herstellergarantie verantwortlich ist, sind wie folgt:

Schweiz: Die beschränkte HP Herstellergarantie ist eine von HP auf freiwilliger Basis angebotene kommerzielle Garantie. Der Name und die Adresse der HP Entität, die in Ihrem Land für die Gewährung der beschränkten HP Herstellergarantie verantwortlich ist, sind wie folgt:

Deutschland: HP Deutschland GmbH, Schickardstr. 32, D-71034 Böblingen

Österreich: HP Austria GmbH., Technologiestrasse 5, A-1120 Wien

Luxemburg: HP Luxembourg S.C.A., 75, Parc d'Activités Capellen, L-8308 Capellen

Belgien: HP Belgium BV, Hermeslaan 1, Building B, B-1831 Diegem, Unternehmensnummer 0597.618.285

Schweiz: HP Schweiz GmbH, Glatt Tower, Neue Winterthurerstrasse 99, 8304 Wallisellen

Deutschland: Die Rechte aus der beschränkten HP Herstellergarantie gelten zusätzlich zu den gesetzlichen Ansprüchen wegen Sachmängeln auf eine zweijährige Gewährleistung ab dem Lieferdatum. Ob Sie Anspruch auf diese Rechte haben, hängt von zahlreichen Faktoren ab. Die Rechte des Kunden sind in keiner Weise durch die beschränkte HP Herstellergarantie eingeschränkt bzw. betroffen. Weitere Hinweise finden Sie auf der folgenden Website: Gewährleistungsansprüche für Verbraucher (http://www.hp.com/go/eu-legal) oder Sie können die Website des Europäischen Verbraucherzentrums (https://commission.europa.eu/live-work-travel-eu/consumer-rights-and-complaints/resolve-your-consumer-complaint/european-consumer-centres-network-ecc-net) besuchen. Verbraucher haben das Recht zu wählen, ob sie eine Leistung von HP gemäß der beschränkten HP Herstellergarantie in Anspruch nehmen oder ob sie sich gemäß der gesetzlichen zweijährigen Haftung für Sachmängel (Gewährleistung) sich an den jeweiligen Verkäufer wenden.

Österreich, Luxemburg und Belgien: Die Rechte aus der beschränkten HP Herstellergarantie gelten zusätzlich zu den gesetzlichen Ansprüchen wegen Sachmängeln auf eine zweijährige Gewährleistung ab dem Lieferdatum. Ob Sie Anspruch auf diese Rechte haben, hängt von zahlreichen Faktoren ab. Die Rechte des Kunden sind in keiner Weise durch die beschränkte HP Herstellergarantie eingeschränkt bzw. betroffen. Weitere Hinweise finden Sie auf der folgenden Website: Gewährleistungsansprüche für Verbraucher (http://www.hp.com/go/eu-legal) oder Sie können die Website des Europäischen Verbraucherzentrums (https://commission.europa.eu/live-work-travel-eu/consumer-rights-and-complaints/resolve-your-consumer-complaint/european-consumer-centres-network-ecc-net) besuchen. Verbraucher haben das Recht zu wählen, ob sie eine Leistung von HP gemäß der beschränkten HP Herstellergarantie in Anspruch nehmen oder ob sie sich gemäß der gesetzlichen zweijährigen Haftung für Sachmängel (Gewährleistung) sich an den jeweiligen Verkäufer wenden.

Schweiz: Die beschränkte HP Herstellergarantie Vorteile gelten zusätzlich zu den rechtlichen Gewährleistungsansprüchen bei fehlerhaften Produkten aus dem Kaufvertrag. Ob Sie Anspruch auf diese Rechte haben, hängt von zahlreichen Faktoren ab. Die Rechte des Kunden sind in keiner Weise durch die beschränkte HP Herstellergarantie eingeschränkt bzw. betroffen.

Verbraucher haben das Recht zu wählen, ob sie die beschränkte HP Herstellergarantie beanspruchen wollen oder sich mit den Gewährleistungsansprüchen an den Verkäufer richten wollen

Belgium, France, Luxembourg, and Switzerland

La garantie limitée HP est une garantie commerciale fournie volontairement par HP. Voici les coordonnées de l'entité HP responsable de l'exécution de la garantie limitée HP dans votre pays:

France: HP France SAS, société par actions simplifiée identifiée sous le numéro 448 694 133 RCS Nanterre, Meudon Campus Bât. 1, 14 rue de la Verrerie 92190 Meudon, tel. 09 69 32 04 35 (produits des gammes grand public et gaming) ou 01 70 48 53 19 (produits de la gamme professionnelle). Autres options de contact : WhatsApp et Messenger.

G.D. Luxembourg: HP Luxembourg S.C.A., 75, Parc d'Activités Capellen, L-8308 Capellen

Belgique: HP Belgium BV, Hermeslaan 1, Building B, B-1831 Diegem, numéro d'entreprise 0597.618.285

Suisse: HP Suisse Sàrl, Glatt Tower, Neue Winterthurerstrasse 99, 8304 Wallisellen

France: La Garantie Limitée HP s'applique sans préjudice du droit pour le consommateur de bénéficier de la garantie légale de conformité dans les conditions prévues aux articles L. 217-1 à L. 217-32 du code de la consommation et de celle relative aux vices cachés dans les conditions prévues aux articles 1641 à 1649 du code civil. Le consommateur peut ainsi choisir d'exercer ses droits au titre de la Garantie Limitée HP ou, auprès du vendeur, au titre des garanties légales dont les modalités de mises en œuvre sont rappelées ci-dessous.

Le consommateur dispose d'un délai de deux ans à compter de la délivrance du bien pour obtenir la mise en oeuvre de la garantie légale de conformité en cas d'apparition d'un défaut de conformité. Durant ce délai, le consommateur n'est tenu d'établir que l'existence du défaut de conformité et non la date d'apparition de celui-ci.

Lorsque le contrat de vente du bien prévoit la fourniture d'un contenu numérique ou d'un service numérique de manière continue pendant une durée supérieure à deux ans, la garantie légale est applicable à ce contenu numérique ou ce service numérique tout au long de la période de fourniture prévue. Durant ce délai, le consommateur n'est tenu d'établir que l'existence du défaut de conformité affectant le contenu numérique ou le service numérique et non la date d'apparition de celui-ci.

La garantie légale de conformité emporte obligation pour le professionnel, le cas échéant, de fournir toutes les mises à jour nécessaires au maintien de la conformité du bien.

La garantie légale de conformité donne au consommateur droit à la réparation ou au remplacement du bien dans un délai de trente jours suivant sa demande, sans frais et sans inconvénient majeur pour lui.

Si le bien est réparé dans le cadre de la garantie légale de conformité, le consommateur bénéficie d'une extension de six mois de la garantie initiale. Si le consommateur demande la réparation du bien, mais que le vendeur impose le remplacement, la garantie légale de conformité est renouvelée pour une période de deux ans à compter de la date de remplacement du bien.

Le consommateur peut obtenir une réduction du prix d'achat en conservant le bien ou mettre fin au contrat en se faisant rembourser intégralement contre restitution du bien, si:

1° Le professionnel refuse de réparer ou de remplacer le bien;

2° La réparation ou le remplacement du bien intervient après un délai de trente jours;

3° La réparation ou le remplacement du bien occasionne un inconvénient majeur pour le consommateur, notamment lorsque le consommateur supporte définitivement les frais de reprise ou d'enlèvement du bien non conforme, ou s'il supporte les frais d'installation du bien réparé ou de remplacement;

4° La non-conformité du bien persiste en dépit de la tentative de mise en conformité du vendeur restée infructueuse.

Le consommateur a également droit à une réduction du prix du bien ou à la résolution du contrat lorsque le défaut de conformité est si grave qu'il justifie que la réduction du prix ou la résolution du contrat soit immédiate. Le consommateur n'est alors pas tenu de demander la réparation ou le remplacement du bien au préalable.

Le consommateur n'a pas droit à la résolution de la vente si le défaut de conformité est mineur.

Toute période d'immobilisation du bien en vue de sa réparation ou de son remplacement suspend la garantie qui restait à courir jusqu'à la délivrance du bien remis en état.

Les droits mentionnés ci-dessus résultent de l'application des articles L. 217-1 à L. 217-32 du code de la consommation.

Le vendeur qui fait obstacle de mauvaise foi à la mise en oeuvre de la garantie légale de conformité encourt une amende civile d'un montant maximal de 300 000 euros, qui peut être porté jusqu'à 10 % du chiffre d'affaires moyen annuel (article L. 241-5 du code de la consommation).

Le consommateur bénéficie également de la garantie légale des vices cachés en application des articles 1641 à 1649 du code civil, pendant une durée de deux ans à compter de la découverte du défaut. Cette garantie donne droit à une réduction de prix si le bien est conservé ou à un remboursement intégral contre restitution du bien.

Pour de plus amples informations, veuillez consulter le lien suivant: Garanties légales accordées au consommateur (http://www.hp.com/go/eu-legal) ou vous pouvez également consulter le site Web des Centres européens des consommateurs (https://commission.europa.eu/live-work-travel-eu/consumer-rights-and-complaints/resolve-your-consumer-complaint/european-consumer-centres-network-ecc-net).

G.D. Luxembourg et Belgique: Les avantages de la garantie limitée HP s'appliquent en complément des droits dont vous disposez au titre de la garantie de non-conformité des biens avec le contrat de vente. Cependant, de nombreux facteurs peuvent avoir un impact sur le bénéfice de ces droits. Vos droits en tant que consommateur au titre de ces garanties ne sont en aucune façon limités ou affectés par la garantie limitée HP. Pour de plus amples informations, veuillez consulter le lien suivant: Garanties légales accordées au consommateur (http://www.hp.com/go/eu-legal) ou vous pouvez également consulter le site Web des Centres européens des consommateurs (https://commission.europa.eu/live-work-travel-eu/consumer-rights-and-complaints/resolve-your-consumer-complaint/european-consumer-centres-network-ecc-net). Les consommateurs ont le droit de choisir de réclamer un service sous la garantie limitée HP ou auprès du vendeur au cours d'une garantie légale de deux ans.

Suisse: Les avantages de la garantie limitée HP s'appliquent en complément des droits dont vous disposez au titre de la garantie de non-conformité des biens avec le contrat de vente. Cependant, de nombreux facteurs peuvent avoir un impact sur le bénéfice de ces droits. Vos droits en tant que consommateur au titre de ces garanties ne sont en aucune façon limités ou affectés par la garantie limitée HP. Pour de plus amples informations, veuillez consulter le lien suivant: Garanties légales accordées au consommateur (http://www.hp.com/go/eu-legal) ou vous pouvez également consulter le site Web des Centres européens des consommateurs (https://commission.europa.eu/live-work-travel-eu/consumer-rights-and-complaints/resolve-your-consumer-complaint/european-consumer-centres-network-ecc-net). Les consommateurs ont le droit de choisir de réclamer un service sous la garantie limitée HP ou auprès du vendeur au cours d'une garantie légale.

Italy

La Garanzia limitata HP è una garanzia commerciale fornita volontariamente da HP. Di seguito sono indicati nome e indirizzo della società HP responsabile della fornitura dei servizi coperti dalla Garanzia limitata HP nel vostro Paese:

Italia: HP Italy S.r.l., Via G. Di Vittorio 9, 20063 Cernusco S/Naviglio

I vantaggi della Garanzia limitata HP vengono concessi ai consumatori in aggiunta ai diritti derivanti dalla garanzia di due anni fornita dal venditore in caso di non conformità dei beni rispetto al contratto di vendita. Tuttavia, diversi fattori possono avere un impatto sulla possibilita' di beneficiare di tali diritti. I diritti spettanti ai consumatori in forza della garanzia legale non sono in alcun modo limitati, né modificati dalla Garanzia limitata HP. Per ulteriori informazioni, si prega di consultare il seguente link: Garanzia legale per i clienti (http://www.hp.com/go/eu-legal), oppure visitare il sito Web dei Centri europei per i consumatori (https://commission.europa.eu/live-work-travel-eu/consumer-rights-and-complaints/resolve-your-consumer-complaint/european-consumer-centres-network-ecc-net). I consumatori hanno il diritto di scegliere se richiedere un servizio usufruendo della Garanzia limitata HP oppure rivolgendosi al venditore per far valere la garanzia legale di due anni.

Spain

Su Garantía limitada de HP es una garantía comercial voluntariamente proporcionada por HP. El nombre y dirección de las entidades HP que proporcionan la Garantía limitada de HP (garantía comercial adicional del fabricante) en su país es:

España: HP Printing and Computing Solutions S.L. Calle Jose Echegaray 18 Las Rozas, 28232 Madrid

Los beneficios de la Garantía limitada de HP son adicionales a la garantía legal de 2 años a la que los consumidores tienen derecho a recibir del vendedor en virtud del contrato de compraventa; sin embargo, varios factores pueden afectar su derecho a recibir los beneficios bajo dicha garantía legal. A este respecto, la Garantía limitada de HP no limita o afecta en modo alguno los derechos legales del consumidor (http://www.hp.com/go/eu-legal). Para más información, consulte

el siguiente enlace: Garantía legal del consumidor o puede visitar el sitio web de los Centros europeos de los consumidores (https://commission.europa.eu/live-work-travel-eu/consumer-rights-and-complaints/resolve-your-consumer-complaint/european-consumer-centres-network-ecc-net). Los clientes tienen derecho a elegir si reclaman un servicio acogiéndose a la Garantía limitada de HP o al vendedor de conformidad con la garantía legal de dos años.

Denmark

Den begrænsede HP-garanti er en garanti, der ydes frivilligt af HP. Navn og adresse på det HP-selskab, der er ansvarligt for HP's begrænsede garanti i dit land, er som følger:

Danmark: HP Inc Danmark ApS, Engholm Parkvej 8, 3450, Allerød

Den begrænsede HP-garanti gælder i tillæg til eventuelle juridiske rettigheder, for en toårig garanti fra sælgeren af varer, der ikke er i overensstemmelse med salgsaftalen, men forskellige faktorer kan dog påvirke din ret til at opnå disse rettigheder. Forbrugerens lovbestemte rettigheder begrænses eller påvirkes ikke på nogen måde af den begrænsede HP-garanti. Se nedenstående link for at få yderligere oplysninger: Forbrugerens juridiske garanti (http://www.hp.com/go/eu-legal) eller du kan besøge De Europæiske Forbrugercentres websted (https://commission.europa.eu/live-work-travel-eu/consumer-rights-and-complaints/resolve-your-consumer-complaint/european-consumer-centres-network-ecc-net). Forbrugere har ret til at vælge, om de vil gøre krav på service i henhold til HP's begrænsede garanti eller hos sælger i henhold til en toårig juridisk garanti.

Norway

HPs garanti er en begrenset og kommersiell garanti som HP selv har valgt å tilby. Følgende lokale selskap innestår for garantien:

Norge: HP Norge AS, Rolfbuktveien 4b, 1364 Fornebu

HPs garanti kommer i tillegg til det mangelsansvar HP har i henhold til norsk forbrukerkjøpslovgivning, hvor reklamasjonsperioden kan være to eller fem år, avhengig av hvor lenge salgsgjenstanden var ment å vare. Ulike faktorer kan imidlertid ha betydning for om du kvalifiserer til å kreve avhjelp iht slikt mangelsansvar. Forbrukerens lovmessige rettigheter begrenses ikke av HPs garanti. Hvis du vil ha mer informasjon, kan du klikke på følgende kobling: Juridisk garanti for forbruker (http://www.hp.com/go/eu-legal) eller du kan besøke nettstedet til de europeiske forbrukersentrene (https://commission.europa.eu/live-work-travel-eu/consumer-rights-and-complaints/resolve-your-consumer-complaint/european-consumer-centres-network-ecc-net). Forbrukere har retten til å velge å kreve service under HPs garanti eller iht selgerens lovpålagte mangelsansvar.

Sweden

HP:s begränsade garanti är en kommersiell garanti som tillhandahålls frivilligt av HP. Namn och adress till det HP-företag som ansvarar för HP:s begränsade garanti i ditt land är som följer:

Sverige: HP PPS Sverige AB, SE-169 73 Stockholm

Fördelarna som ingår i HP:s begränsade garanti gäller utöver de lagstadgade rättigheterna till tre års garanti från säljaren angående varans bristande överensstämmelse gentemot köpeavtalet, men olika faktorer kan påverka din rätt att utnyttja dessa rättigheter. Konsumentens lagstadgade rättigheter varken begränsas eller påverkas på något sätt av HP:s begränsade garanti. Mer information får du om du följer denna länk: Lagstadgad garanti för konsumenter (http://www.hp.com/go/eu-legal) eller så kan du gå till European Consumer Centers webbplats (https://commission.europa.eu/live-work-travel-eu/consumer-rights-and-complaints/resolve-your-consumer-complaint/european-consumer-centres-network-ecc-net). Konsumenter har rätt att välja om de vill ställa krav enligt HP:s begränsade garanti eller på säljaren enligt den lagstadgade treåriga garantin.

Portugal

A Garantia Limitada HP é uma garantia comercial fornecida voluntariamente pela HP. O nome e a morada da entidade HP responsável pela prestação da Garantia Limitada HP no seu país são os seguintes:

Portugal: HPCP – Computing and Printing Portugal, Unipessoal, Lda., Edificio D. Sancho I, Quinta da Fonte, Porto Salvo, Lisboa, Oeiras, 2740 244

As vantagens da Garantia Limitada HP aplicam-se cumulativamente com quaisquer direitos decorrentes da legislação aplicável à garantia de dois anos do vendedor, relativa a defeitos do produto e constante do contrato de venda. Existem, contudo, vários fatores que poderão afetar a sua elegibilidade para beneficiar de tais direitos. Os direitos legalmente atribuídos aos consumidores não são limitados ou afetados de forma alguma pela Garantia Limitada HP. Para mais informações, consulte a ligação seguinte: Garantia legal do consumidor (http://www.hp.com/go/eu-legal) ou visite o Web site da Rede dos Centros Europeus do Consumidor (https://commission.europa.eu/live-work-travel-eu/consumer-rights-and-complaints/resolve-your-consumer-complaint/european-consumer-centres-network-ecc-net). Os consumidores têm o direito de escolher se pretendem reclamar assistência ao abrigo da Garantia Limitada HP ou contra o vendedor ao abrigo de uma garantia jurídica de dois anos.

Greece and Cyprus

Η Περιορισμένη εγγύηση HP είναι μια εμπορική εγγύηση η οποία παρέχεται εθελοντικά από την HP. Η επωνυμία και η διεύθυνση του νομικού προσώπου HP που παρέχει την Περιορισμένη εγγύηση HP στη χώρα σας είναι η εξής:

Ελλάδα /Κύπρος: HP Printing and Personal Systems Hellas EPE, Tzavella 1-3, 15232 Chalandri, Attiki

Ελλάδα /Κύπρος: HP Συστήματα Εκτύπωσης και Προσωπικών Υπολογιστών Ελλάς Εταιρεία Περιορισμένης Ευθύνης, Tzavella 1-3, 15232 Chalandri, Attiki

Τα προνόμια της Περιορισμένης εγγύησης HP ισχύουν επιπλέον των νόμιμων δικαιωμάτων για διετή εγγύηση έναντι του Πωλητή για τη μη συμμόρφωση των προϊόντων με τις συνομολογημένες συμβατικά ιδιότητες, ωστόσο η άσκηση των δικαιωμάτων σας αυτών μπορεί να εξαρτάται από διάφορους παράγοντες. Τα νόμιμα δικαιώματα των καταναλωτών δεν περιορίζονται ούτε επηρεάζονται καθ' οιονδήποτε τρόπο από την Περιορισμένη εγγύηση HP. Για περισσότερες πληροφορίες, συμβουλευτείτε την ακόλουθη τοποθεσία web: Νόμιμη εγγύηση καταναλωτή (http://www.hp.com/go/eu-legal) ή μπορείτε να επισκεφτείτε την τοποθεσία web των Ευρωπαϊκών Κέντρων Καταναλωτή (https://commission.europa.eu/live-work-travel-eu/consumer-rights-and-complaints/resolve-your-consumer-complaint/european-consumer-centres-network-ecc-net). Οι καταναλωτές έχουν το δικαίωμα να επιλέξουν αν θα αξιώσουν την υπηρεσία στα πλαίσια της Περιορισμένης εγγύησης HP ή από τον πωλητή στα πλαίσια της νόμιμης εγγύησης δύο ετών.

Hungary

A HP korlátozott jótállás egy olyan kereskedelmi jótállás, amelyet a HP a saját elhatározásából biztosít. Az egyes országokban a HP mint gyártó által vállalt korlátozott jótállást biztosító vállalatok neve és címe a jótállási jegyen vagy a termékhez csatolt egyéb dokumentumban található, vagy ennek hiányában erről az eladó ad tájékoztatást.

Budapest, Hungary, (BUD): HP Inc Magyarország Kft. 1117 Budapest, Újbuda Allee Corner Október huszonharmadika u. 8-10.

A HP korlátozott jótállásban biztosított jogok azokon a jogokon felül illetik meg Önt, amelyek a termékeknek az adásvételi szerződés szerinti minőségére vonatkozó kétéves, jogszabályban foglalt eladói szavatosságból, továbbá ha az Ön által vásárolt termékre alkalmazandó, a jogszabályban foglalt kötelező eladói jótállásból erednek, azonban számos körülmény hatással lehet arra, hogy ezek a jogok Önt megilletik-e. További információért kérjük, keresse fel a következő webhelyet: Jogi Tájékoztató Fogyasztóknak (http://www.hp.com/go/eu-legal) vagy látogassa meg az

Európai Fogyasztói Központok webhelyét (https://commission.europa.eu/live-work-travel-eu/consumer-rights-and-complaints/resolve-your-consumer-complaint/european-consumer-centres-network-ecc-net). A fogyasztóknak jogában áll, hogy megválasszák, hogy a jótállással kapcsolatos igényüket a HP korlátozott jótállás alapján vagy a kétéves, jogszabályban foglalt eladói szavatosság, illetve, ha alkalmazandó, a jogszabályban foglalt kötelező eladói jótállás alapján érvényesítik.

Czech Republic

Omezená záruka HP je obchodní zárukou dobrovolně poskytovanou společností HP. Názvy a adresy společností skupiny HP, které odpovídají za plnění omezené záruky HP ve vaší zemi, jsou následující:

Česká republika: HP Inc Czech Republic s. r. o., Za Brumlovkou 5/1559, 140 00 Praha 4

Výhody, poskytované omezenou zárukou HP, se uplatňuji jako doplňek k jakýmkoli právním nárokům na dvouletou záruku poskytnutou prodejcem v případě nesouladu zboží s kupní smlouvou. Váš nárok na uznání těchto práv však může záviset na mnohých faktorech. Omezená záruka HP žádným způsobem neomezuje ani neovlivňuje zákonná práva zákazníka. Další informace získáte kliknutím na následující odkaz: Zákonná záruka spotřebitele (http://www.hp.com/go/eu-legal) případně můžete navštívit webové stránky Evropského spotřebitelského centra (https://commission.europa.eu/live-work-travel-eu/consumer-rights-and-complaints/resolve-your-consumer-complaint/european-consumer-centres-network-ecc-net). Spotřebitelé mají právo se rozhodnout, zda chtějí službu reklamovat v rámci omezené záruky HP nebo v rámci zákonem stanovené dvouleté záruky u prodejce.

Slovakia

Obmedzená záruka HP je obchodná záruka, ktorú spoločnosť HP poskytuje dobrovoľne. Meno a adresa subjektu HP, ktorý zabezpečuje plnenie vyplývajúce z Obmedzenej záruky HP vo vašej krajine:

Slovenská republika: HP Inc Slovakia, s.r.o., Galvaniho 7, 821 04 Bratislava

Výhody Obmedzenej záruky HP sa uplatnia vedľa prípadných zákazníkových zákonných nárokov voči predávajúcemu z vád, ktoré spočívajú v nesúlade vlastností tovaru s jeho popisom podľa predmetnej zmluvy. Možnosť uplatnenia takých prípadných nárokov však môže závisieť od rôznych faktorov. Služby Obmedzenej záruky HP žiadnym spôsobom neobmedzujú ani neovplyvňujú zákonné práva zákazníka, ktorý je spotrebiteľom. Ďalšie informácie nájdete na nasledujúcom prepojení: Zákonná záruka spotrebiteľa (http://www.hp.com/go/eu-legal), prípadne môžete navštíviť webovú lokalitu európskych zákazníckych stredísk (https://commission.europa.eu/live-work-travel-eu/consumer-rights-and-complaints/resolve-your-consumer-complaint/european-consumer-centres-network-ecc-net). Spotrebitelia majú právo zvoliť si, či chcú uplatniť servis v rámci Obmedzenej záruky HP alebo počas zákonnej dvojročnej záručnej lehoty u predajcu.

Poland

Ograniczona gwarancja HP to komercyjna gwarancja udzielona dobrowolnie przez HP. Nazwa i adres podmiotu HP odpowiedzialnego za realizację Ograniczonej gwarancji HP w Polsce:

Polska: HP Inc Polska sp. z o.o., ul. Szturmowa 2a, 02-678 Warszawa, wpisana do rejestru przedsiębiorców prowadzonego przez Sąd Rejonowy dla m.st. Warszawy w Warszawie, XIII Wydział Gospodarczy Krajowego Rejestru Sądowego, pod numerem KRS 0000546115, NIP 5213690563, REGON 360916326, BDO 000006211, kapitał zakładowy 480.500 PLN.

Świadczenia wynikające z Ograniczonej gwarancji HP stanowią dodatek do praw przysługujących nabywcy w związku z dwuletnią odpowiedzialnością sprzedawcy z tytułu niezgodności towaru z umową (rękojmia). Niemniej, na możliwość korzystania z tych praw mają wpływ różne czynniki. Ograniczona gwarancja HP w żaden sposób nie ogranicza praw konsumenta ani na nie nie wpływa. Więcej informacji można znaleźć pod następującym łączem: Gwarancja prawna konsumenta (http://www.hp.com/go/eu-legal), można także odwiedzić stronę internetową

Europejskiego Centrum Konsumenckiego (https://commission.europa.eu/live-work-travel-eu/consumer-rights-and-complaints/resolve-your-consumer-complaint/european-consumer-centres-network-ecc-net). Konsumenci mają prawo wyboru co do możliwosci skorzystania albo z usług gwarancyjnych przysługujących w ramach Ograniczonej gwarancji HP albo z uprawnień wynikających z dwuletniej rękojmi w stosunku do sprzedawcy.

Bulgaria

Ограничената гаранция на HP представлява търговска гаранция, доброволно предоставяна от HP. Името и адресът на дружеството на HP за вашата страна, отговорно за предоставянето на гаранционната поддръжка в рамките на Ограничената гаранция на HP, са както следва:

HP Inc Bulgaria EOOD (Ейч Пи Инк България ЕООД), HP Inc България ЕООД, Бизнес Парк София, 1766 София, сграда 10, България

Предимствата на Ограничената гаранция на HP се прилагат в допълнение към всички законови права за двугодишна гаранция от продавача при несъответствие на стоката с договора за продажба. Въпреки това, различни фактори могат да окажат влияние върху условията за получаване на тези права. Законовите права на потребителите не са ограничени или засегнати по никакъв начин от Ограничената гаранция на HP. За допълнителна информация, моля вижте Правната гаранция на потребителя (http://www.hp.com/go/eu-legal) или посетете уебсайта на Европейския потребителски център (https://commission.europa.eu/live-work-travel-eu/consumer-rights-and-complaints/resolve-your-consumer-complaint/european-consumer-centres-network-ecc-net). Потребителите имат правото да избират дали да претендират за извършване на услуга в рамките на Ограничената гаранция на HP или да потърсят такава от търговеца в рамките на двугодишната правна гаранция.

Romania

Garanția limitată HP este o garanție comercială furnizată în mod voluntar de către HP. Numele și adresa entității HP răspunzătoare de punerea în aplicare a Garanției limitate HP în țara dumneavoastră sunt următoarele:

România: HP Inc Romania SRL, 5 Fabrica de Glucoza Str., Building F, Ground Floor and Floor 8, 2nd District, București

Beneficiile Garanției limitate HP se aplică suplimentar față de orice drepturi privind garanția de doi ani oferită de vânzător pentru neconformitatea bunurilor cu contractul de vânzare; cu toate acestea, diverși factori pot avea impact asupra eligibilității dvs. de a beneficia de aceste drepturi. Drepturile legale ale consumatorului nu sunt limitate sau afectate în vreun fel de Garanția limitată HP. Pentru informații suplimentare consultați următorul link: garanția acordată consumatorului prin lege (http://www.hp.com/go/eu-legal) sau puteți accesa site-ul Centrul European al Consumatorilor (https://commission.europa.eu/live-work-travel-eu/consumer-rights-and-complaints/resolve-your-consumer-complaint/european-consumer-centres-network-ecc-net). Consumatorii au dreptul să aleagă dacă să pretindă despăgubiri în cadrul Garanței limitate HP sau de la vânzător, în cadrul garanției legale de doi ani.

Belgium and the Netherlands

De Beperkte Fabrieksgarantie van HP is een commerciële garantie vrijwillig verstrekt door HP. De naam en het adres van de HP-entiteit die verantwoordelijk is voor het uitvoeren van de Beperkte Fabrieksgarantie van HP in uw land is als volgt:

Nederland: HP Nederland B.V., Startbaan 16, 1187 XR Amstelveen

België: HP Belgium BV, Hermeslaan 1, Building B, B-1831 Diegem, ondernemingsnummer 0597.618.285

De voordelen van de Beperkte Fabrieksgarantie van HP vormen een aanvulling op de wettelijke garantie voor consumenten gedurende twee jaren na de levering te verlenen door de verkoper bij een gebrek aan conformiteit van de goederen met de relevante koopovereenkomst. Niettemin kunnen diverse factoren een impact hebben op de eventuele aanspraak van de consument op deze wettelijke rechten. De wettelijke rechten van de consument worden op geen enkele wijze beperkt of beïnvloed door de Beperkte Fabrieksgarantie van HP. Raadpleeg voor meer informatie de volgende webpagina: Wettelijke garantie voor consumenten (http://www.hp.com/go/eu-legal) of u kan de website van het Europees Consumenten Centrum bezoeken (https://commission.europa.eu/live-work-travel-eu/consumer-rights-and-complaints/resolve-your-consumer-complaint/european-consumer-centres-network-ecc-net). Consumenten hebben het recht om te kiezen tussen enerzijds de Beperkte Fabrieksgarantie van HP of anderzijds het aanspreken van de verkoper ter uitoefening van de wettelijke garantie.

Finland

HP:n rajoitettu takuu on HP:n vapaaehtoisesti antama kaupallinen takuu. HP:n myöntämästä takuusta maassanne vastaavan HP:n edustajan yhteystiedot ovat:

Suomi: HP Finland Oy, Piispankalliontie, FIN - 02200 Espoo

HP:n takuun edut ovat voimassa mahdollisten kuluttajansuojalakiin perustuvien oikeuksien lisäksi sen varalta, että tuote ei vastaa myyntisopimusta. Saat lisätietoja seuraavasta linkistä: Kuluttajansuoja (http://www.hp.com/go/eu-legal) tai voit käydä Euroopan kuluttajakeskuksen sivustolla (https://commission.europa.eu/live-work-travel-eu/consumer-rights-and-complaints/resolve-your-consumer-complaint/european-consumer-centres-network-ecc-net). Kuluttajilla on oikeus vaatia virheen korjausta HP:n takuun ja kuluttajansuojan perusteella HP:lta tai myyjältä.

Slovenia

Omejena garancija HP je prostovoljna trgovska garancija, ki jo zagotavlja podjetje HP. Ime in naslov poslovne enote HP, ki je odgovorna za omejeno garancijo HP v vaši državi, sta naslednja:

Slovenija: HP Europe B.V. Meyrin Branch, Route du Nant-d'Avril 150, 1217 Meyrin, Switzerland

Ugodnosti omejene garancije HP veljajo poleg zakonskih pravic, ki ob sklenitvi kupoprodajne pogodbe izhajajo iz dveletne garancije prodajalca v primeru neskladnosti blaga, vendar lahko na izpolnjevanje pogojev za uveljavitev pravic vplivajo različni dejavniki. Omejena garancija HP nikakor ne omejuje strankinih z zakonom predpisanih pravic in ne vpliva nanje. Za dodatne informacije glejte naslednjo povezavo: Strankino pravno jamstvo (http://www.hp.com/go/eu-legal); ali pa obiščite spletno mesto evropskih središč za potrošnike (https://commission.europa.eu/live-work-travel-eu/consumer-rights-and-complaints/resolve-your-consumer-complaint/european-consumer-centres-network-ecc-net). Potrošniki imajo pravico izbrati, ali bodo uveljavljali pravice do storitev v skladu z omejeno garancijo HP ali proti prodajalcu v skladu z dvoletno zakonsko garancijo.

Croatia

HP ograničeno jamstvo komercijalno je dobrovoljno jamstvo koje pruža HP. Ime i adresa HP subjekta odgovornog za HP ograničeno jamstvo u vašoj državi:

Hrvatska: HP Computing and Printing d.o.o. za računalne i srodne aktivnosti, Radnička cesta 41, 10000 Zagreb

Pogodnosti HP ograničenog jamstva vrijede zajedno uz sva zakonska prava na dvogodišnje jamstvo kod bilo kojeg prodavača s obzirom na nepodudaranje robe s ugovorom o kupnji. Međutim, razni faktori mogu utjecati na vašu mogućnost ostvarivanja tih prava. HP ograničeno jamstvo ni na koji način ne utječe niti ne ograničava zakonska prava potrošača. Dodatne informacije potražite na ovoj adresi: Zakonsko jamstvo za potrošače (http://www.hp.com/go/eu-legal) ili možete posjetiti web-mjesto Europskih potrošačkih centara (https://commission.europa.eu/live-work-travel-eu/consumer-rights-and-complaints/

resolve-your-consumer-complaint/european-consumer-centres-network-ecc-net). Potrošači imaju pravo odabrati žele li ostvariti svoja potraživanja u sklopu HP ograničenog jamstva ili pravnog jamstva prodavača u trajanju ispod dvije godine.

Latvia

HP ierobežotā garantija ir komercgarantija, kuru brīvprātīgi nodrošina HP. HP uzņēmums, kas sniedz HP ierobežotās garantijas servisa nodrošinājumu jūsu valstī:

Latvija: HP Finland Oy, PO Box 515, 02201 Espoo, Finland

HP ierobežotās garantijas priekšrocības tiek piedāvātas papildus jebkurām likumīgajām tiesībām uz pārdevēja un/vai ražotāju nodrošinātu divu gadu garantiju gadījumā, ja preces neatbilst pirkuma līgumam, tomēr šo tiesību saņemšanu var ietekmēt vairāki faktori. HP ierobežotā garantija nekādā veidā neierobežo un neietekmē patērētāju likumīgās tiesības. Lai iegūtu plašāku informāciju, izmantojiet šo saiti: Patērētāju likumīgā garantija (http://www.hp.com/go/eu-legal) vai arī Eiropas Patērētāju tiesību aizsardzības centra tīmekļa vietni (https://commission.europa.eu/live-work-travel-eu/consumer-rights-and-complaints/resolve-your-consumer-complaint/european-consumer-centres-network-ecc-net). Patērētājiem ir tiesības izvēlēties, vai pieprasīt servisa nodrošinājumu saskaņā ar HP ierobežoto garantiju, vai arī pārdevēja sniegto divu gadu garantiju.

Lithuania

HP ribotoji garantija yra HP savanoriškai teikiama komercinė garantija. Toliau pateikiami HP bendrovių, teikiančių HP garantiją (gamintojo garantiją) jūsų šalyje, pavadinimai ir adresai:

Lietuva: HP Finland Oy, PO Box 515, 02201 Espoo, Finland

HP ribotoji garantija papildomai taikoma kartu su bet kokiomis kitomis įstatymais nustatytomis teisėmis į pardavėjo suteikiamą dviejų metų laikotarpio garantiją dėl prekių atitikties pardavimo sutarčiai, tačiau tai, ar jums ši teisė bus suteikiama, gali priklausyti nuo įvairių aplinkybių. HP ribotoji garantija niekaip neapriboja ir neįtakoja įstatymais nustatytų vartotojo teisių. Daugiau informacijos rasite paspaudę šią nuorodą: Teisinė vartotojo garantija (http://www.hp.com/go/eu-legal) arba apsilankę Europos vartotojų centro internetinėje svetainėje (https://commission.europa.eu/live-work-travel-eu/consumer-rights-and-complaints/resolve-your-consumer-complaint/european-consumer-centres-network-ecc-net). Vartotojai turi teisę prašyti atlikti techninį aptarnavimą pagal HP ribotąją garantiją arba pardavėjo teikiamą dviejų metų įstatymais nustatytą garantiją.

Estonia

HP piiratud garantii on HP poolt vabatahtlikult pakutav kaubanduslik garantii. HP piiratud garantii eest vastutab HP üksus aadressil:

Eesti: HP Finland Oy, PO Box 515, 02201 Espoo, Finland

HP piiratud garantii rakendub lisaks seaduses ettenähtud müüjapoolsele kaheaastasele garantiile, juhul kui toode ei vasta müügilepingu tingimustele. Siiski võib esineda asjaolusid, mille puhul teie jaoks need õigused ei pruugi kehtida. HP piiratud garantii ei piira ega mõjuta mingil moel tarbija seadusjärgseid õigusi. Lisateavet leiate järgmiselt lingilt: tarbija õiguslik garantii (http://www.hp.com/go/eu-legal) või võite külastada Euroopa tarbijakeskuste veebisaiti (https://commission.europa.eu/live-work-travel-eu/consumer-rights-and-complaints/resolve-your-consumer-complaint/european-consumer-centres-network-ecc-net). Tarbijal on õigus valida, kas ta soovib kasutada HP piiratud garantiid või seadusega ette nähtud müüjapoolset kaheaastast garantiid.

Limited Warranty Statement for HP Print Cartridges, Imaging Drums, and Imaging Units for use with HP LaserJet Printers, HP Laser Printers and Samsung Branded Laser Printers

This product is covered by the HP Commercial/Limited Warranty in countries/regions authorized for use/distribution. For complete warranty details, see: hp.com/toner/info.

Long life consumable and maintenance kit limited warranty statement

This HP product is warranted to be free from defects in materials and workmanship until the earlier of a) the printer providing a low-life indicator on the control panel, or b) the expiration of the warranty period. Replacement Preventative Maintenance kits or LLCs products carry a 90 day parts only limited warranty, from the last purchase date.

This warranty does not apply to products that (a) have been refurbished, remanufactured or tampered with in any way, (b) experience problems resulting from misuse, improper storage, or operation outside of the published environmental specifications for the printer product or (c) exhibit wear from ordinary use.

To obtain warranty service, please return the product to place of purchase (with a written description of the problem) or contact HP customer support. At HP's option, HP will either replace products that prove to be defective or refund your purchase price.

TO THE EXTENT ALLOWED BY LOCAL LAW, THE ABOVE WARRANTY IS EXCLUSIVE AND NO OTHER WARRANTY OR CONDITION, WHETHER WRITTEN OR ORAL, IS EXPRESSED OR IMPLIED. HP SPECIFICALLY DISCLAIMS ANY IMPLIED WARRANTIES OR CONDITIONS OF MERCHANTABILITY, SATISFACTORY QUALITY, AND FITNESS FOR A PARTICULAR PURPOSE.

TO THE EXTENT ALLOWED BY LOCAL LAW, IN NO EVENT WILL HP OR ITS SUPPLIERS BE LIABLE FOR DIRECT, SPECIAL, INCIDENTAL, CONSEQUENTIAL (INCLUDING LOST PROFIT OR DATA), OR OTHER DAMAGE, WHETHER BASED IN CONTRACT, TORT, OR OTHERWISE.

THE WARRANTY TERMS CONTAINED IN THIS STATEMENT, EXCEPT TO THE EXTENT LAWFULLY PERMITTED, DO NOT EXCLUDE, RESTRICT OR MODIFY AND ARE IN ADDITION TO THE MANDATORY STATUTORY RIGHTS APPLICABLE TO THE SALE OF THE PRODUCT TO YOU.

Dynamic Security Enabled Printers

This printer is intended to work only with cartridges that have a new or reused HP chip. A reused HP chip enables the use of reused, remanufactured, and refilled cartridges.

The printer uses dynamic security measures to block cartridges using a non-HP chip. Periodic firmware updates delivered over the internet will maintain the effectiveness of the dynamic security measures and block cartridges that previously worked.

Updates can improve, enhance, or extend the printer's functionality and features, protect against security threats, and serve other purposes, but these updates can also block cartridges using a non-HP chip from working in the printer, including cartridges that work today. Unless you are enrolled in certain HP programs such as Instant Ink or use other services that require automatic online firmware updates, most HP printers can be configured to receive updates either automatically or with a notification that allows you to choose whether to update or not. For more information on dynamic security and how to configure online firmware updates, please go to www.hp.com/learn/ds.

HP policy on non-HP supplies

HP cannot recommend the use of non-HP toner cartridges, either new or remanufactured.

NOTE: For HP printer products, the use of a non-HP toner cartridge or a refilled toner cartridge does not affect either the warranty to the customer or any HP support contract with the customer. However, if product failure or damage is attributable to the use of a non-HP toner cartridge or refilled toner cartridge, HP will charge its standard time and materials charges to service the product for the particular failure or damage.

HP anticounterfeit Web site

Go to www.hp.com/go/anticounterfeit when you install an HP cartridge and the control-panel message indicates the cartridge is non-HP. HP will help determine if the cartridge is genuine and take steps to resolve the problem.

Your cartridge might not be a genuine HP cartridge if you notice the following:

- The supplies status page indicates that a non-HP supply is installed.
- You are experiencing a high number of problems with the cartridge.
- The cartridge does not look like it usually does (for example, the packaging differs from HP packaging).

Data stored on the toner cartridge

The HP toner cartridges used with this product contain a memory chip that assists in the operation of the product.

In addition, this memory chip collects a limited set of information about the usage of the product, which might include the following: the date when the toner cartridge was first installed, the date when the toner cartridge was last used, the number of pages printed using the toner cartridge, the page coverage, the printing modes used, any printing errors that might have occurred, and the product model. This information helps HP design future products to meet our customers' printing needs.

The data collected from the toner cartridge memory chip does not contain information that can be used to identify a customer or user of the toner cartridge or their product.

HP collects a sampling of the memory chips from toner cartridges returned to HP's free return and recycling program (HP Planet Partners: www.hp.com/hprecycle). The memory chips from this sampling are read and studied in order to improve future HP products. HP partners who assist in recycling this toner cartridge might have access to this data, as well.

Any third party possessing the toner cartridge might have access to the anonymous information on the memory chip.

End User License Agreement

READ CAREFULLY BEFORE USING THIS SOFTWARE EQUIPMENT: This End-User License Agreement ("EULA") is a legal agreement between (a) you (either an individual or a single entity) and (b) HP Inc. ("HP") that governs your use of the Sign-In Once application installed on or made available by HP for use with your printing device (the “Software”).

An amendment or addendum to this EULA may accompany the HP Product.

RIGHTS IN THE SOFTWARE ARE OFFERED ONLY ON THE CONDITION THAT YOU AGREE TO ALL TERMS AND CONDITIONS OF THIS EULA. BY INSTALLING, COPYING, DOWNLOADING, OR OTHERWISE USING THE SOFTWARE, YOU AGREE TO BE BOUND BY THE TERMS OF THIS EULA. IF YOU DO NOT ACCEPT THESE LICENSE TERMS, YOUR SOLE REMEDY IS TO IMMEDIATELY STOP USING SOFTWARE AND TO UNINSTALL THE PRODUCT FROM YOUR DEVICE.

THIS EULA IS A GLOBAL AGREEMENT AND IS NOT SPECIFIC TO ANY PARTICULAR COUNTRY, STATE OR TERRITORY. IF YOU ACQUIRED THE SOFTWARE AS A CONSUMER WITHIN THE MEANING OF RELEVANT CONSUMER LEGISLATION IN YOUR COUNTRY, STATE OR TERRITORY, THEN DESPITE ANYTHING TO THE CONTRARY IN THIS EULA, NOTHING IN THIS EULA AFFECTS ANY NON EXCLUDABLE STATUTORY RIGHTS OR REMEDIES THAT YOU MAY HAVE UNDER SUCH CONSUMER LEGISLATION AND THIS EULA IS SUBJECT TO THOSE RIGHTS AND REMEDIES. REFER TO SECTION 17 FOR FURTHER INFORMATION ON YOUR CONSUMER RIGHTS.

1. **GRANT OF LICENSE**. HP grants you the following rights provided you comply with all terms and conditions of this EULA. In the case you are representing an entity or organization, the same terms and conditions in this Section 1 shall also apply with respect to the use, copying, and storage of the Software on the devices of your respective entity or organization.

    a. Use. You may use one copy of the Software on your device for the purpose of accessing and using the Software. You may not separate component parts of the Software for use on more than one device. You do not have the right to distribute the Software, nor do you have the right to modify the Software or disable any licensing or control feature of the Software. You may load the Software into the temporary memory (RAM)of your device for purposes of using the Software.

    b. Storage. You may copy the Software into the local memory or storage device of your device.

    c. Copying. You may make archival or back-up copies of the Software, provided the copy contains all of the original Software's proprietary notices and that it is used only for back-up purposes.

    d. Reservation of Rights. HP and its suppliers reserve all rights not expressly granted to you in this EULA.

    e. Freeware. Notwithstanding the terms and conditions of this EULA, all or any portion of the Software which constitutes non-proprietary HP software or software provided under public license by third parties ("Freeware"), is licensed to you subject to the terms and conditions of the software license agreement or other documentation accompanying such Freeware at the time of download, installation, or use of the Freeware. Use of the Freeware by you shall be governed entirely by the terms and conditions of such license.

2. **UPGRADES**. To use Software identified as an upgrade, you must first be licensed for the original Software identified by HP as eligible for the upgrade. After upgrading, you may no longer use the original Software Product that formed the basis for your upgrade eligibility.

3. **ADDITIONAL SOFTWARE**. This EULA applies to updates or supplements to the original Software provided by HP unless HP provides other terms along with the update or supplement. In case of a conflict between such terms, the other terms will prevail.

4. **TRANSFER**.

    a. Third Party. The initial user of the Software may make a one-time transfer of the Software to another end user. Any transfer must include all component parts, media, printed materials, this EULA, and if applicable, the Certificate of Authenticity. The transfer may not be an indirect transfer, such as a consignment. Prior to the transfer, the end user receiving the transferred product must agree to all the EULA terms. Upon transfer of the Software, your license is automatically terminated.

b. Restrictions. You may not rent, lease or lend the Software or use the Software for commercial timesharing or bureau use. You may not sublicense, assign or transfer the license or Software except as expressly provided in this EULA.

5. **PROPRIETARY RIGHTS**. All intellectual property rights in the Software and user documentation are owned by HP or its suppliers and are protected by law, including but not limited to United States copyright, trade secret, and trademark law, as well as other applicable laws and international treaty provisions. You shall not remove any product identification, copyright notices or proprietary restrictions from the Software.

6. **LIMITATION ON REVERSE ENGINEERING**. You may not reverse engineer, decompile, or disassemble the Software, except and only to the extent that the right to do so is mandated under applicable law notwithstanding this limitation or it is expressly provided for in this EULA.

7. **TERM**. This EULA is effective unless terminated or rejected. This EULA will also terminate upon conditions set forth elsewhere in this EULA or if you fail to comply with any term or condition of this EULA.

8. **ACCOUNT SET-UP**.

   a. You must register and establish an account on HP ID in order to use the Software. It is your responsibility to obtain and maintain all equipment, services and software needed for access to and use of the HP ID account, any applications linked via this Software, and your device(s), as well as paying any applicable charges.

   b. YOU ARE SOLELY AND FULLY RESPONSIBLE FOR MAINTAINING THE CONFIDENTIALITY OF ANY USERNAMES AND PASSWORDS COLLECTED BY THE SOFTWARE. You must notify HP immediately of any unauthorized use of your HP ID account or any other breach of security related to this Software or the device(s) it is installed on.

9. **NOTICE OF DATA COLLECTION.** HP may collect usernames, passwords, device IP addresses, and/or other authentication information used by you to access HP ID and the various applications connected via this Software. HP may use this data to optimize Software performance based on user preferences, provide support and maintenance, and assure security and software integrity. You can read more about the data collection in the sections titled "What Data We Collect" and "How We Use Data" in the HP Privacy Statement.

10. **DISCLAIMER OF WARRANTIES**. TO THE MAXIMUM EXTENT PERMITTED BY APPLICABLE LAW, HP AND ITS SUPPLIERS PROVIDE THE SOFTWARE "AS IS" AND WITH ALL FAULTS, AND HEREBY DISCLAIM ALL OTHER WARRANTIES, DUTIES, AND CONDITIONS, EITHER EXPRESS, IMPLIED, OR STATUTORY, INCLUDING, BUT NOT LIMITED TO, WARRANTIES: (i) OF TITLE AND NON-INFRINGEMENT; (ii) OF MERCHANTABILITY; (iii) OF FITNESS FOR A PARTICULAR PURPOSE; (iv) THAT THE SOFTWARE WILL FUNCTION WITH NON-HP SUPPLIES OR ACCESSORIES; AND (v), OF LACK OF VIRUSES ALL WITH REGARD TO THE SOFTWARE. Some states/jurisdictions do not allow exclusion of implied warranties or limitations on the duration of implied warranties, so the above disclaimer may not apply to you in its entirety.

11. **LIMITATION OF LIABILITY**. Subject to local law, notwithstanding any damages that you might incur, the entire liability of HP and any of its suppliers under any provision of this EULA and your exclusive remedy for all of the foregoing shall be limited to the greater of the amount actually paid by you separately for the Software or U.S. $5.00. TO THE MAXIMUM EXTENT PERMITTED BY APPLICABLE LAW, IN NO EVENT SHALL HP OR ITS SUPPLIERS BE LIABLE FOR ANY SPECIAL, INCIDENTAL, INDIRECT, OR CONSEQUENTIAL DAMAGES WHATSOEVER (INCLUDING, BUT NOT LIMITED TO, DAMAGES FOR LOSS OF PROFITS OR CONFIDENTIAL OR OTHER INFORMATION, FOR BUSINESS INTERRUPTION, FOR PERSONAL INJURY, OR FOR LOSS OF PRIVACY) ARISING OUT OF OR IN ANY WAY RELATED TO THE USE OF OR INABILITY TO USE THE SOFTWARE, OR OTHERWISE IN CONNECTION WITH ANY PROVISION OF THIS EULA, EVEN IF HP OR ANY SUPPLIER HAS BEEN ADVISED OF THE POSSIBILITY OF SUCH DAMAGES AND EVEN IF THE REMEDY FAILS OF ITS ESSENTIAL PURPOSE. Some states/jurisdictions do not allow the exclusion or limitation of incidental or consequential damages, so the above limitation or exclusion may not apply to you.

12. **U.S. GOVERNMENT CUSTOMERS**. Consistent with FAR 12.211 and 12.212, Commercial Computer Software, Computer Software Documentation, and Technical Data for Commercial Items are licensed to the U.S. Government under HP's standard commercial license.

13. **COMPLIANCE WITH EXPORT LAWS**. You shall comply with all laws and regulations of the United States and other countries ("Export Laws") to assure that the Software is not (1) exported, directly or indirectly, in violation of Export Laws, or (2) used for any purpose prohibited by Export Laws, including, without limitation, nuclear, chemical, or biological weapons proliferation.

14. **CAPACITY AND AUTHORITY TO CONTRACT**. You represent that you are of the legal age of majority in your state of residence and, if applicable, you are duly authorized by your employer to enter into this contract.

15. **APPLICABLE LAW**. This EULA is governed by the laws of the State of California, U.S.A.

16. **ENTIRE AGREEMENT**. Unless you have entered into a separate license agreement for the Software, this EULA (including any addendum or amendment to this EULA which is included with the HP Product) is the entire agreement between you and HP relating to the Software and it supersedes all prior or contemporaneous oral or written communications, proposals and representations with respect to the Software or any other subject matter covered by this EULA. To the extent the terms of any HP policies or programs for support services conflict with the terms of this EULA, the terms of this EULA shall control.

17. **CONSUMER RIGHTS**. Consumers in some countries, states or territories may have the benefit of certain statutory rights and remedies under consumer legislation in respect of which HP's liability cannot lawfully be excluded or limited. If you acquired the Software as a consumer within the meaning of relevant consumer legislation in your country, state or territory, the provisions of this EULA (including the disclaimers of warranties, limitations and exclusions of liability) must be read subject to applicable law and apply only to the maximum extent permitted by that applicable law.

    Australian Consumers: If you acquired the Software as a consumer within the meaning of the 'Australian Consumer Law' under the Australian Competition and Consumer Act 2010 (Cth) then despite any other provision of this EULA:

    a. the Software comes with guarantees that cannot be excluded under the Australian Consumer Law, including that goods will be of acceptable quality and services will be supplied with due care and skill. You are entitled to a replacement or refund for a major failure and compensation for any other reasonably foreseeable loss or damage. You are also entitled to have the Software repaired or replaced if it is not of acceptable quality and the failure does not amount to a major failure

    b. nothing in this EULA excludes, restricts or modifies any right or remedy, or any guarantee, warranty or other term or condition implied or imposed by the Australian Consumer Law which cannot be lawfully excluded or limited; and

c. the benefits provided to you by the express warranties in this EULA are in addition to other rights and remedies available to you under the Australian Consumer Law. Your rights under the Australian Consumer Law prevail to the extent that they are inconsistent with any limitations contained in the express warranty.

The Software may be capable of retaining user-generated data. HP hereby provides you with notice that if HP repairs your Software, that repair may result in the loss of that data. To the full extent permitted by law, the limitations and exclusions of HP's liability in this EULA apply in respect of any such loss of data.

If you think that you are entitled to any warranty under this agreement or any of the above remedies, please contact HP:

Table A-1

	HP PPS Australia Pty Ltd
	Building F, 1 Homebush Bay Drive
	Rhodes, NSW 2138
	Australia

To initiate a support request or warranty claim, please call 13 10 47 (within Australia) or +61 2 8278 1039 (if dialing internationally) or visit www.hp.com.au and select the "Support" tab for the most current customer service options.

If you are a consumer within the meaning of the Australia Consumer Law and you are purchasing the Software or warranty and support services for the Software which are not of a kind ordinarily acquired for personal, domestic or household use or consumption, then despite any other provision of this EULA, HP limits its liability for failure to comply with a consumer guarantee as follows:

a. provision of warranty or support services for the Software: to any one or more of the following: re-supply of the services or payment of the costs of having the services re-supplied;

b. provision of the Software: to any one or more of the following: replacement of the Software or the supply of equivalent software; repair of the Software; payment of the costs of replacing the Software or of acquiring equivalent software; or payment of the costs of having the Software repaired; and

c. otherwise, to the maximum extent permitted by law.

New Zealand Consumers: In New Zealand, the Software comes with guarantees that cannot be excluded under the Consumer Guarantees Act 1993. In New Zealand, Consumer Transaction means a transaction involving a person who is purchasing goods for personal, domestic or household use or consumption and not for the purpose of a business. New Zealand consumers who are purchasing goods for personal, domestic or household use or consumption and not for the purpose of a business ("New Zealand Consumers") are entitled to repair, replacement or refund for a failure and compensation for other reasonably foreseeable loss or damage. A New Zealand Consumer (as defined above) may recover the costs of returning the product to the place of purchase if there is a breach of the New Zealand consumer law; furthermore, if it will be of significant cost to the New Zealand Consumer to return the goods to HP then HP will collect such goods at its own cost. Where any supply of products or services is for business purposes, you agree that the Consumer Guarantees Act 1993 does not apply and that given the nature and value of the transaction, this is fair and reasonable.

© Copyright 2019 HP Development Company, L.P.

The information contained herein is subject to change without notice. All other product names mentioned herein may be trademarks of their respective companies. To the extent permitted by applicable law, the only warranties for HP products and services are set forth in the express warranty statements accompanying such products and services. Nothing herein should be construed as constituting an additional warranty. To the extent permitted by applicable law, HP shall not be liable for technical or editorial errors or omissions contained herein.

Version: April 2019

Customer self-repair warranty service

HP products are designed with many Customer Self Repair (CSR) parts to minimize repair time and allow for greater flexibility in performing defective parts replacement. If during the diagnosis period, HP identifies that the repair can be accomplished by the use of a CSR part, HP will ship that part directly to you for replacement. There are two categories of CSR parts: 1) Parts for which customer self repair is mandatory. If you request HP to replace these parts, you will be charged for the travel and labor costs of this service. 2) Parts for which customer self repair is optional. These parts are also designed for Customer Self Repair. If, however, you require that HP replace them for you, this may be done at no additional charge under the type of warranty service designated for your product.

Based on availability and where geography permits, CSR parts will be shipped for next business day delivery. Same-day or four-hour delivery may be offered at an additional charge where geography permits. If assistance is required, you can call the HP Technical Support Center and a technician will help you over the phone. HP specifies in the materials shipped with a replacement CSR part whether a defective part must be returned to HP. In cases where it is required to return the defective part to HP, you must ship the defective part back to HP within a defined period of time, normally five (5) business days. The defective part must be returned with the associated documentation in the provided shipping material. Failure to return the defective part may result in HP billing you for the replacement. With a customer self repair, HP will pay all shipping and part return costs and determine the courier/carrier to be used.

Customer support

Get telephone support for your country/region Have the product name, serial number, date of purchase, and problem description ready.	Country/region phone numbers are on the flyer that was in the box with your product or at www.hp.com/support/.
Get 24-hour Internet support, and download software utilities and drivers	http://www.hp.com/support/ljpro4000
Order additional HP service or maintenance agreements	www.hp.com/go/carepack
Register your product	www.register.hp.com

B Environmental product stewardship program

Protecting the environment

HP is committed to providing quality products in an environmentally sound manner. This product has been designed with several attributes to minimize impacts on our environment.

Battery information

This product may contain a:

- Poly-carbonmonofluoride lithium (BR type) or
- Manganese dioxide lithium (CR type)

battery that may require special handling at end-of-life.

NOTE: NOTE for CR type only: Perchlorate material - special handling may apply. See www.dtsc.ca.gov/hazardouswaste/perchlorate.

Weight: ~3 g

Location: On motherboard

User Removable: No

廢電池請回收

For recycling information, you can contact www.hp.com/hprecycle or contact your local authorities or the Electronics Industries Alliance: www.eiae.org.

Battery Notice for Brazil (for printers with non-removable battery)

A bateria deste equipamento não foi projetada para ser removida pelo cliente.

Battery disposal - California

Perchlorate material - special handling may apply. See www.dtsc.ca.gov/hazardouswaste/perchlorate/.

This product's real-time clock battery or coin cell battery may contain perchlorate and may require special handling when recycled or disposed of in California.

Chemical substances

HP is committed to providing our customers with information about the chemical substances in our products as needed to comply with legal requirements such as REACH (Regulation EC No 1907/2006 of the European Parliament and the Council). A chemical information report for this product can be found at: www.hp.com/go/reach.

Electronic hardware recycling

HP encourages customers to recycle used electronic hardware. For more information about recycling programs go to: www.hp.com/hprecycle.

EPEAT

EPEAT is an Electronic Product Environmental Assessment Tool used to evaluate the effects of a product on the environment.

HP products are designed to meet EPEAT criteria. Click here for information on HP's EPEAT registered products.

For more information on EPEAT, go to EPEAT.net.

Material restrictions

This HP product does not contain added mercury.

Material Safety Data Sheet (MSDS)

Material Safety Data Sheets (MSDS) for supplies containing chemical substances (for example, toner) can be obtained by accessing the HP Web site at www.hp.com/go/msds.

Ozone production

The airborne emissions of ozone for this product has been measured according to a standardized protocol* and when these emissions data are applied to an anticipated high-use scenario in an office workspace**, HP has determined there is no appreciable amount of ozone generated during printing and the levels are well within current indoor air quality standards and guidelines.

* Test method for the determination of emissions from hardcopy devices with respect to awarding the environmental label for office devices with printing function; RAL-UZ 219 - BAM January, 2021

** Based on ozone concentration when printing 2 hours per day in 30.6 cubic meter room with a ventilation rate of 0.68 air changes per hour with HP printing supplies

Paper

This product is capable of using recycled paper and lightweight paper (EcoFFICIENT™) when the paper meets the guidelines outlined in the *HP LaserJet Printer Family Print Media Guide*. This product is suitable for the use of recycled paper and lightweight paper (EcoFFICIENT™) according to EN12281:2002.

Paper use

This product's duplex feature (manual or automatic) and N-up printing (multiple pages printed on one page) capability can reduce paper usage and the resulting demands on natural resources.

Plastics

Plastic parts over 25 grams are marked according to international standards that enhance the ability to identify plastics for recycling purposes at the end of the product's life.

Power consumption

Power usage drops significantly while in Ready, Sleep, or Off mode, which saves natural resources and saves money without affecting the high performance of this product. HP printing and imaging equipment marked with the ENERGY STAR® logo is qualified to the U.S. Environmental Protection Agency's ENERGY STAR specifications for imaging equipment. The following mark will appear on ENERGY STAR qualified imaging products:

Additional ENERGY STAR qualified imaging product model information is listed at:

www.hp.com/go/energystar

HP LaserJet print supplies

Original HP Supplies were designed with the environment in mind. HP makes it easy to conserve resources and paper when printing. And when you are done, we make it easy and free to recycle.[1]

All HP cartridges returned to HP Planet Partners go through a multiphase recycling process where materials are separated and refined for use as raw material in new Original HP cartridges and everyday products. No Original HP cartridges returned through HP Planet Partners are ever sent to a landfill, and HP never refills or resells Original HP cartridges.

To participate in the HP Planet Partners return and recycling program, visit www.hp.com/hprecycle. Select your country/region for information on how to return HP printing supplies. Multi-lingual program information and instructions are also included in every new HP LaserJet print cartridge package.

[1] Program availability varies. For more information, visit www.hp.com/hprecycle.

Toner consumption

EconoMode uses less toner, which might extend the life of the print cartridge. HP does not recommend the full-time use of EconoMode. If EconoMode is used full-time, the toner supply might outlast the mechanical parts in the print cartridge. If print quality begins to degrade and is no longer acceptable, consider replacing the print cartridge.

For more information

To obtain information about these environmental topics:

- Product environmental profile sheet for this and many related HP products
- HP's commitment to the environment
- HP's environmental management system
- HP's end-of-life product return and recycling program
- Material Safety Data Sheets

Visit www.hp.com/go/environment.

Also, visit www.hp.com/hprecycle.

Brazil hardware recycling information

Não descarte o produto eletrônico em lixo comum

Este produto eletrônico e seus componentes não devem ser descartados no lixo comum, pois embora estejam em conformidade com padrões mundiais de restrição a substâncias nocivas, podem conter, ainda que em quantidades mínimas, substâncias impactantes ao meio ambiente. Ao final da vida útil deste produto, o usuário deverá entregá-lo à HP. A não observância dessa orientação sujeitará o infrator às sanções previstas em lei.

Após o uso, as pilhas e/ou baterias dos produtos HP deverão ser entregues ao estabelecimento comercial ou rede de assistência técnica autorizada pela HP.

Para maiores informações, inclusive sobre os pontos de recebimento, acesse:

www.hp.com.br/reciclar

Restriction of Hazardous Substances (China)

电器电子产品中有害物质的名称及含有信息表

The Table of names and content information of hazardous substances in electrical and electronic products

根据中国《电器电子产品有害物质限制使用管理办法》

As required by China's Management Methods for Restricted Use of Hazardous Substances in Electrical and Electronic Products

产品中有害物质的名称及含有的信息表

Table of names and content information of hazardous substances in the products

部件名称 Part name	有害物质 Hazardous substances									
	铅 (Pb)	汞 (Hg)	镉 (Cd)	六价铬 (Cr(VI))	多溴联苯 (PBBs)	多溴二苯醚 (PBDEs)	邻苯二甲酸二正丁酯 (DBP)	邻苯二甲酸二异丁酯 (DIBP)	邻苯二甲酸丁苄酯 (BBP)	邻苯二甲酸二（2-乙基）己酯 (DEHP)
打印引擎	×	○	○	○	○	○	○	○	○	○
控制面板	×	○	○	○	○	○	○	○	○	○
塑料外壳	○	○	○	○	○	○	○	○	○	○
格式化板组件	×	○	○	○	○	○	○	○	○	○
碳粉盒	×	○	○	○	○	○	○	○	○	○

注 1：○：表示该有害物质在该部件所有均质材料中的含量均不超出电器电子产品有害物质限制使用国家标准要求。

Note 1: ○ : denotes that the content of said hazardous substance in all of the homogeneous materials in the said part does not exceed the limits given in the national standard regarding restricted use of hazardous substances in electrical and electronic products.

× ：表示该有害物质至少在该部件的某一均质材料中的含量超出电器电子产品有害物质限制使用国家标准要求。

× : denotes that the content of said hazardous substance in at least one of the homogeneous materials in the said part exceeds the limits given in the national standard regarding restricted use of hazardous substances in electrical and electronic products.

注 2：以上未列出的部件,表明其有害物质含量均不超出电器电子产品有害物质限制使用国家标准要求。

Note 2: Parts not listed above indicate that the content of hazardous substances contained therein does not exceed the limits given in the national standard regarding restricted use of hazardous substances in electrical and electronic products.

CHR-LJ-PK-SFP-03

China SEPA

中国为境为为为为为品用为为明
噪声大于63.0 dB(A)的为公为为不宜放置于为公室内，为在独立的
隔离区域使用。
如需为为为使用本为品或打印大量文件，为确保在通为良好的房为
内使用。
如您需要确为本为品为于零能耗状为，为按下为源关为按为，并将
插为从为源插座断开。
您可以使用再生为，以减少为源耗为。

The regulation of the implementation on China energy label for printer, fax, and copier

依据“复印机、打印机和传真机能源效率标识实施规则”，本打印机具有中国能效标签。根据“复印机、打印机和传真机能效限定值及 能效等级”(“GB21521”) 决定并计算得出该标签上所示的能效等级和 TEC (典型能耗) 值。

1. 能效等级

能效等级分为三个等级，等级 1 级能效最高。根据产品类型和打印速度标准决定能效限定值。

2. 能效信息

2.1 LaserJet 打印机和高性能喷墨打印机

- 典型能耗

  典型能耗是正常运行 GB21521 测试方法中指定的时间后的耗电量。此数据表示为每周千瓦时 (kWh)。

标签上所示的能效数字按涵盖根据“复印机、打印机和传真机能源效率标识实施规则”选择的登记装置中所有配置的代表性配置测定而 得。因此，本特定产品型号的实际能耗可能与标签上所示的数据不同。

有关规格的详细信息，请参阅 GB21521 标准的当前版本。

Disposal of waste equipment by users (EU, UK, and India)

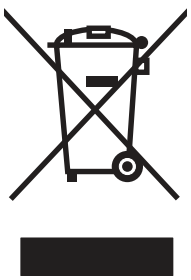

This symbol means do not dispose of your product with your other household waste. Instead, you should protect human health and the environment by handing over your waste equipment to a designated collection point for the recycling of waste electrical and electronic equipment. For more information, please contact your household waste disposal service, or go to: www.hp.com/hprecycle.

EU Microplastics

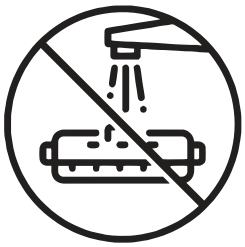

Product Power Data per European Union Commission Regulation 2023/826 (EU)

For product power data, including the power consumption of the product in networked standby if all wired network ports are connected and all wireless network ports are activated, please refer to section P15 'Additional Information' of the product IT ECO Declaration at www.hp.com/us-en/hp-information/sustainable-impact/document-reports.html.

India Battery Waste Management (BWM) Rules

EPR Registration No: 141163

Restriction on Hazardous Substances (India)

This product, as well as its related consumables and spares, complies with the reduction in hazardous substances provisions of the "India E-waste Rule 2016." It does not contain lead, mercury, hexavalent chromium, polybrominated biphenyls or polybrominated diphenyl ethers in concentrations exceeding 0.1 weight % and 0.01 weight % for cadmium, except where allowed pursuant to the exemptions set in Schedule 2 of the Rule.

Restriction of Hazardous Substances (Taiwan)

台灣 限用物質含有情況標示聲明書

Taiwan Declaration of the Presence Condition of the Restricted Substances Marking

單元Unit	限用物質及其化學符號 Restricted substances and its chemical symbols					
	鉛Lead (Pb)	汞Mercury (Hg)	鎘Cadmium (Cd)	六價鉻 Hexavalent chromium (Cr^{+6})	多溴聯苯 Polybrominated biphenyls (PBB)	多溴二苯醚 Polybrominated diphenyl ethers (PBDE)
列印引擎 Print engine	—	○	○	○	○	○
外殼和紙匣 External Casing and Trays	○	○	○	○	○	○
電源供應器 Power Supply	—	○	○	○	○	○
電線 Cables	○	○	○	○	○	○
印刷電路板 Print printed circuit board	—	○	○	○	○	○
控制面板 Control panel	—	○	○	○	○	○
碳粉匣 Cartridge	○	○	○	○	○	○

備考1.〝超出0.1 wt %〞及〝超出0.01 wt %〞係指限用物質之百分比含量超出百分比含量基準值。

Note 1：“Exceeding 0.1 wt %” and “exceeding 0.01 wt %” indicate that the percentage content of the restricted substance exceeds the reference percentage value of presence condition.

備考2.〝○〞係指該項限用物質之百分比含量未超出百分比含量基準值。

Note 2：“○” indicates that the percentage content of the restricted substance does not exceed the percentage of reference value of presence.

備考3.〝—〞係指該項限用物質為排除項目。

Note 3：The “–” indicates that the restricted substance corresponds to the exemption.

WEEE (Turkey)

Türkiye Cumhuriyeti: AEEE Yönetmeliğine Uygundur

C Regulatory information

Regulatory statements

Regulatory model identification numbers

For regulatory identification purposes, your product is assigned a regulatory model number. Regulatory model numbers should not be confused with marketing names or product numbers.

Table C-1 Regulatory model identification numbers

Product model number	Regulatory model number
HP LaserJet Pro 4006dw	BOISB-2300-01
HP LaserJet Pro 4007dw	
HP LaserJet Pro 4008dw	

European Union & United Kingdom Regulatory Notice

Products bearing the CE marking and UKCA marking comply with one or more of the following EU Directives and/or equivalent UK Statutory Instruments as may be applicable: Low Voltage Directive 2014/35/EU, EMC Directive 2014/30/EU, Eco Design Directive 2009/125/EC, RED 2014/53/EU, RoHS Directive 2011/65/EU, Battery Regulation 2023/1542.

Compliance with these directives is assessed using applicable European Harmonized Standards. The full EU and UK Declaration of Conformity can be found at the following website: www.hp.com/go/certificates (Search with the product model name or its Regulatory Model Number (RMN), which may be found on the regulatory label.)

The point of contact for regulatory matters is: Email reg@hp.com

The EU point of contact for regulatory matters is:

HP REG 23010, 08028, Barcelona, Spain

The UK point of contact for regulatory matters is:

HP Inc UK Ltd, Regulatory Enquiries, Earley West, 300 Thames Valley Park Drive, Reading, RG6 1PT

European Union Consumer Laser Product

CLASS 1 LASER PRODUCT

CONSUMER LASER PRODUCT

EN 50689:2021

FCC regulations

This equipment has been tested and found to comply with the limits for a Class B digital device, pursuant to part 15 of the FCC Rules. These limits are designed to provide reasonable protection against harmful interference in a residential installation. This equipment generates, uses and can radiate radio frequency energy and, if not installed and used in accordance with the instructions, may cause harmful interference to radio communications. However, there is no guarantee that interference will not occur in a particular installation. If this equipment does cause harmful interference to radio or television reception, which can be determined by turning the equipment off and on, the user is encouraged to try to correct the interference by one or more of the following measures:

- Reorient or relocate the receiving antenna.
- Increase the separation between the equipment and receiver.
- Connect the equipment into an outlet on a circuit different from that to which the receiver is connected.
- Consult the dealer or an experienced radio/TV technician for help.

NOTE: Any changes or modifications to the printer that are not expressly approved by HP could void the user's authority to operate this equipment.

Use of a shielded interface cable is required to comply with the Class B limits of Part 15 of FCC rules.

Canada - Industry Canada ICES-003 Compliance Statement

CAN ICES (B)/NMB (B)

VCCI statement (Japan)

VCCI 32-1 規定適合の場合

この装置は、クラスB機器です。この装置は、住宅環境で使用することを目的としていますが、この装置がラジオやテレビジョン受信機に近接して使用されると、受信障害を引き起こすことがあります。 取扱説明書に従って正しい取り扱いをして下さい。 VCCI ー B

Power cord instructions

Make sure your power source is adequate for the product voltage rating. The voltage rating is on the product label. The product uses either 100-127 Vac or 220-240 Vac and 50/60 Hz.

Connect the power cord between the product and a grounded AC outlet.

CAUTION: To prevent damage to the product, use only the power cord that is provided with the product.

NOTE: Symbol "~" represents alternating current.

Power cord statement (Japan)

製品には、同梱された電源コードをお使い下さい。
同梱された電源コードは、他の製品では使用出来ません。

Laser safety

The Center for Devices and Radiological Health (CDRH) of the U.S. Food and Drug Administration has implemented regulations for laser products manufactured since August 1, 1976. Compliance is mandatory for products marketed in the United States. The device is certified as a "Class 1" laser product under the U.S. Department of Health and Human Services (DHHS) Radiation Performance Standard according to the Radiation Control for Health and Safety Act of 1968. Since radiation emitted inside the device is completely confined within protective housings and external covers, the laser beam cannot escape during any phase of normal user operation.

⚠ **WARNING!** Using controls, making adjustments, or performing procedures other than those specified in this user guide may result in exposure to hazardous radiation.

For other US/Canada regulatory matters, please contact:

HP Inc.

1501 Page Mill Rd, Palo Alto, CA 94304, USA

Email contact: reg@hp.com or Telephone contact: +1 (650) 857-1501

Laser statement for Finland

Luokan 1 laserlaite

HP LaserJet Pro 4006dw, 4007dw, 4008dw, laserkirjoitin on käyttäjän kannalta turvallinen luokan 1 laserlaite. Normaalissa käytössä kirjoittimen suojakotelointi estää lasersäteen pääsyn laitteen ulkopuolelle. Laitteen turvallisuusluokka on määritetty standardin EN 60825-1:2014 +A11:2021 mukaisesti.

VAROITUS !

Laitteen käyttäminen muulla kuin käyttöohjeessa mainitulla tavalla saattaa altistaa käyttäjän turvallisuusluokan 1 ylittävälle näkymättömälle lasersäteilylle.

VARNING !

Om apparaten används på annat sätt än i bruksanvisning specificerats, kan användaren utsättas för osynlig laserstrålning, som överskrider gränsen för laserklass 1.

HUOLTO

HP LaserJet Pro 4006dw, 4007dw, 4008dw - kirjoittimen sisällä ei ole käyttäjän huollettavissa olevia kohteita. Laitteen saa avata ja huoltaa ainoastaan sen huoltamiseen koulutettu henkilö. Tällaiseksi huoltotoimenpiteeksi ei katsota väriainekasetin vaihtamista, paperiradan puhdistusta tai muita käyttäjän käsikirjassa lueteltuja, käyttäjän tehtäväksi tarkoitettuja ylläpitotoimia, jotka voidaan suorittaa ilman erikoistyökaluja.

VARO !

Mikäli kirjoittimen suojakotelo avataan, olet alttiina näkymättömällelasersäteilylle laitteen ollessa toiminnassa. Älä katso säteeseen.

VARNING !

Om laserprinterns skyddshölje öppnas då apparaten är i funktion, utsättas användaren för osynlig laserstrålning. Betrakta ej strålen.

Tiedot laitteessa käytettävän laserdiodin säteilyominaisuuksista: Aallonpituus 775-800 nm Teho 5 mW Luokan 3B laser.

Nordic Statements (Denmark, Finland, Norway, Sweden)

Denmark:

Apparatets stikprop skal tilsuttes en stikkontakt med jord, som giver forbindelse til stikproppens jord.

Finland:

Laite on liitettävä suojakoskettimilla varustettuun pistorasiaan.

Norway:

Apparatet må tilkoples jordet stikkontakt.

Sweden:

Apparaten skall anslutas till jordat uttag.

GS statement (Germany)

Das Gerät ist nicht für die Benutzung im unmittelbaren Gesichtsfeld am Bildschirmarbeitsplatz vorgesehen. Um störende Reflexionen am Bildschirmarbeitsplatz zu vermeiden, darf dieses Produkt nicht im unmittelbaren Gesichtsfeld platziert werden.

Das Gerät ist kein Bildschirmarbeitsplatz gemäß BildscharbV. Bei ungünstigen Lichtverhältnissen (z. B. direkte Sonneneinstrahlung) kann es zu Reflexionen auf dem Display und damit zu Einschränkungen der Lesbarkeit der dargestellten Zeichen kommen.

Die Bilddarstellung dieses Gerätes ist nicht für verlängerte Bildschirmtätigkeiten geeignet.

Eurasian Conformity (Armenia, Belarus, Kazakhstan, Kyrgyzstan)

EAC

Өндіруші және өндіру мерзімі

HP Inc. Мекенжайы: 1501 Page Mill Road, Palo Alto, California 94304, U.S.

Өнімнің жасалу мерзімін табу үшін өнімнің қызмет көрсету жапсырмасындағы 10 таңбадан тұратын сериялық нөмірін қараңыз.

4-ші, 5-ші және 6-шы сандар өнімнің жасалған жылы мен аптасын көрсетеді. 4-ші сан жылын көрсетеді, мысалы «3» саны «2013» дегенді білдіреді.

5-ші және 6-шы сандары берілген жылдың қай аптасында жасалғанын көрсетеді, мысалы, «12» саны «12-ші» апта дегенді білдіреді.

Жергілікті өкілдіктері:

Ресей: ООО "ЭйчПи Инк",
Ресей Федерациясы, 125171, Мәскеу, Ленинград шоссесі, 16А блок 3,
Телефон/факс: +7 495 797 35 00 / +7 499 92132 50

Қазақстан: "ЭйчПи Глобал Трэйдинг Би.Ви." компаниясының Қазақстандағы филиалы, Қазақстан Республикасы, 050040, Алматы к., Бостандык ауданы, Әл-Фараби даңғылы, 77/7,
Телефон/факс: +7 727 355 35 52

EAC

Производитель и дата производства

HP Inc. Адрес: 1501 Page Mill Road, Palo Alto, California 94304, U.S.

Дата производства зашифрована в 10-значном серийном номере, расположенном на наклейке со служебной информацией изделия.

4-я, 5-я и 6-я цифры обозначают год и неделю производства. 4-я цифра обозначает год, например, «3» обозначает, что изделие произведено в «2013» году.
5-я и 6-я цифры обозначают номер недели в году производства, например, «12» обозначает «12-ю» неделю.

Местные представители:

Россия: ООО "ЭйчПи Инк",
Российская Федерация, 125171, г. Москва, Ленинградское шоссе, 16А, стр.3,
Телефон/факс: +7 495 797 35 00 / +7 499 92132 50

Казахстан: Филиал компании "ЭйчПи Глобал Трэйдинг Би.Ви.", Республика Казахстан, 050040, г. Алматы, Бостандыкский район, проспект Аль-Фараби, 77/7, Телефон/факс: + 7 727 355 35 52

Taiwan BSMI USB Port (Walk-up) statement

台灣 BSMI USB 埠 (Walk-up) 聲明

產品前端, 上方或側邊之 USB 埠 (walk-up 埠), 僅支持隨身碟.

Product Safety Statements

Do not extend more than one paper tray at a time.

Do not use paper tray as a step.

All trays must be closed while relocating/moving product.

Keep hands out of paper tray when closing.

If the printer has a keyboard, close keyboard tray when not in use.

Wireless statements

Australia

This device incorporates a radio-transmitting (wireless) device. For protection against radio transmission exposure, it is recommended that this device be operated no less than 20 cm from the head, neck, or body.

Brazil

Este equipamento não tem direito à proteção contra interferência prejudicial e não pode causar interferência em sistemas devidamente autorizados.

Para maiores informações consulte o site da ANATEL – www.anatel.gov.br

Canada

For Indoor Use. This digital apparatus does not exceed the Class B limits for radio noise emissions from digital apparatus as set out in the radio interference regulations of the Canadian Department of Communications. The internal wireless radio complies with RSS 210 of Industry Canada.

Pour l´usage d´intérieur. Le présent appareil numérique n´émet pas de bruits radioélectriques dépassant les limites applicables aux appareils numériques de Classe B prescribes dans le règlement sur le brouillage radioélectrique édicté par le Ministère des Communications du Canada. Le composant RF interne est conforme à la norme CNR-210 d´Industrie Canada.

Products with 5 GHz Operation Industry of Canada

⚠ **CAUTION:** When using IEEE 802.11a wireless LAN, this product is restricted to indoor use, due to its operation in the 5.15- to 5.25-GHz frequency range. Industry Canada requires this product to be used indoors for the frequency range of 5.15 GHz to 5.25 GHz to reduce the potential for harmful interference to co-channel mobile satellite systems. High-power radar is allocated as the primary user of the 5.25- to 5.35-GHz and 5.65- to 5.85-GHz bands. These radar stations can cause interference with and/or damage to this device.

Lors de l'utilisation d'un réseau local sans fil IEEE 802.11a, ce produit est réservé à une utilisation en intérieur en raison de sa plage de fréquences, comprise entre 5,15 et 5,25 GHz. Industrie Canada recommande l'utilisation en intérieur de ce produit pour la plage de fréquences comprise entre 5,15 et 5,25 GHz afin de réduire les interférences nuisibles potentielles avec les systèmes de satellite portables utilisant le même canal. Le radar à haute puissance est défini comme étant le principal utilisateur des bandes 5,25 à 5,35 GHz et 5,65 à 5,85 GHz. Ces stations radar peuvent provoquer des interférences sur ce périphérique et/ou l'endommager.

Exposure to Radio Frequency Radiation (Canada)

⚠ **WARNING!** Exposure to Radio Frequency Radiation The radiated output power of this device is below the Industry Canada radio frequency exposure limits. Nevertheless, the device should be used in such a manner that the potential for human contact is minimized during normal operation.

To avoid the possibility of exceeding the Industry Canada radio frequency exposure limits, human proximity to the antennas should not be less than 20 cm (8 inches).

AVERTISSEMENT! Exposition aux émissions de fréquences radio. La puissance de sortie émise par ce périphérique est inférieure aux limites fixées par Industrie Canada en matière d'exposition aux fréquences radio. Néanmoins, les précautions d'utilisation du périphérique doivent être respectées afin de limiter tout risque de contact avec une personne.

China CMIIT Wireless Statement

中国无线电发射设备通告

型号核准代码显示在产品本体的铭牌上。

European Regulatory Notice

The telecommunications functionality of this product may be used in the following European countries/regions:

Austria, Belgium, Bulgaria, Cyprus, Czech Republic, Denmark, Estonia, Finland, France, Germany, Greece, Hungary, Iceland, Ireland, Italy, Latvia, Liechtenstein, Lithuania, Luxembourg, Malta, Netherlands, Norway, Poland, Portugal, Romania, Slovak Republic, Slovenia, Spain, Sweden, Switzerland, and United Kingdom.

European regulatory notice

Wireless functionality in Europe

For products with 802.11b/g/n or Bluetooth radio	This product operates on radio frequency between 2400 MHz and 2483.5 MHz, with a transmit power of 20 dBm (100 mW) or less.
For products with 802.11a/b/g/n radio	**CAUTION:** IEEE802.11x wireless LAN with 5.15-5.35 GHz frequency band is restricted for **indoor use only** in all European Union member states, EFTA (Iceland, Norway, Liechtenstein) and most other European countries (i.e.: Switzerland, Turkey, Republic of Serbia). Using this WLAN application outdoors might lead to interference issues with existing radio services. This product operates on radio frequencies between 2400 MHz and 2483.5 MHz, and between 5170 MHz and 5710 MHz, with a transmit power of 20 dBm (100 mW) or less.

Notice for use in Japan

この機器は技術基準適合証明又は工事設計認証を受けた無線設備を搭載しています。

Mexico statement

Aviso para los usuarios de México

“La operación de este equipo está sujeta a las siguientes dos condiciones: (1) es posible que este equipo o dispositivo no cause interferencia perjudicial y (2) este equipo o dispositivo debe aceptar cualquier interferencia, incluyendo la que pueda causar su operación no deseada."

Para saber el modelo de la tarjeta inalámbrica utilizada, revise la etiqueta regulatoria de la impresora.

Taiwan statement

取得審驗證明之低功率射頻器材，非經核准，公司、商號或使用者均不得擅自變更頻率、加大功率或變更原設計之特性及功能。低功率射頻器材之使用不得影響飛航安全及干擾合法通信；經發現有干擾現象時，應立即停用，並改善至無干擾時方得繼續使用。前述合法通信，指依電信管理法規定作業之無線電通信。低功率射頻器材須忍受合法通信或工業、科學及醫療用電波輻射性電機設備之干擾。

Taiwan NCC statement

應避免影響附近雷達系統之操作。

高增益指向性天線只得應用於固定式點對點系統。

Thailand Wireless Statement

เครื่องวิทยุคมนาคมนี้มีระดบั การแผ่คลื่นแม่เหล็กไฟฟ้ าสอดคล้องตามมาตรฐานความปลอดภยั ต่อสุขภาพของมนุษย์จาก การ ใช้เครื่องวิทยุคมนาคมที่คณะกรรมการกิจการโทรคมนาคมแห่งชาติประกาศกำหนด

This radio communication equipment has the electromagnetic field strength in compliance with the Safety Standard for the Use of Radio Communication Equipment on Human Health announced by the National Telecommunications Commission.

FCC compliance statement—United States

Exposure to radio frequency radiation

⚠ **CAUTION:** The radiated output power of this device is far below the FCC radio frequency exposure limits. Nevertheless, the device shall be used in such a manner that the potential for human contact during normal operation is minimized.

In order to avoid the possibility of exceeding the FCC radio frequency exposure limits, human proximity to the antenna shall not be less than 20 cm (8 in) during normal operation.

This device complies with Part 15 of FCC Rules. Operation is subject to the following two conditions: (1) this device may not cause interference, and (2) this device must accept any interference, including interference that may cause undesired operation of the device.

⚠ **CAUTION:** Based on Section 15.21 of the FCC rules, changes of modifications to the operation of this product without the express approval by HP may invalidate its authorized use.

Index

Symbols/Numerics

550-sheet paper trays
  part numbers 27
550-sheet trays
  jams 78

A

accessories
  ordering 27
  overview 26
  part numbers 27
acoustic specifications 11
alternative letterhead mode 13
anticounterfeit supplies 113, 126
applications
  access, control panel 4

B

batteries included 132, 133
battery disposal, California 133
battery notice,Brazil 133
Battery Waste Management
  (BWM) 138
bin, output
  locating 3
browser requirements
  HP Embedded Web Server 55

C

cartridge
  replacing 36
cartridge policy 29
cartridge protection 29, 32
cartridges
  non-HP 113, 126
  order numbers 36
  recycling 132, 134
  warranty 113, 125
ce marking 141
checklist
  wireless connectivity 110
Class 1 consumer laser 141
cleaning
  paper path 95
control panel
  accessing applications 4
  help 70
  locating 3
  locating features 4
counterfeit supplies 113, 126
customer support
  online 70, 113, 131

D

default gateway, setting 61
deleting
  stored jobs 48, 51
dial, control panel
  locating 4
dimensions, printer 9
disposal, end-of-life 132, 133
double-sided printing
  Mac 45
  Windows 42
drivers, supported 7
duplex printing
  Mac 45
duplex printing (double-sided)
  settings (Windows) 42
  Windows 42
duplexer
  jams 78
duplexing
  manually (Mac) 45
  manually (Windows) 42
Dynamic Security Enabled
  Printers 26, 66, 125

E

EconoMode setting 65, 95
economy settings 65
electrical specifications 11
electronic hardware
  recycling 132, 133
Embedded Web Server (EWS)
  assigning passwords 63
  features 55
end-of-life disposal 132, 133
envelopes
  loading 24
  orientation 24
environmental stewardship
  program 132
eu microplastics 138
Eurasian conformity 140, 141,
  145

F

FCC regulations 140, 141
Finnish laser safety
  statement 140, 141, 143
firmware
  updating 68
fraud Web site 113, 126
fuser
  jams 89, 92

G

gateway, setting default 61
genuine HP cartridges 29

H

hardware recycling, Brazil 132,
  135
help, control panel 70
HP Customer Care 70, 113, 131
HP Embedded Web Server
  menus 56
  settings 56
HP Embedded Web Server (EWS)
  features 55
HP EWS, using 55
HP fraud Web site 113, 126
HP Printer Home Page, using 55

HP Web Jetadmin 66

I

image quality
check toner cartridge status 95
check toner-cartridge status 97
interface ports
locating 3
IP network settings
configure 60
IPv6 address 61

J

jams
550-sheet trays 78
duplexer 78
fuser 89, 92
locations 78
output bin 78, 85
rear door 87
Tray 1 78, 79
Tray 2 78, 81
Japanese VCCI
statement 140-142
Jetadmin, HP Web 66
jobs, stored
creating (Windows) 48
deleting 48, 51
Mac settings 48
printing 48

K

Korean EMC statement 140, 141

L

label
orientation 25
labels
orientation, loading 25
printing on 25
labels, loading 25
laser safety statements 140, 141, 143
license, software 113, 126
loading
paper in Tray 1 13
paper in Tray 2 17
paper in Tray 3 20
local area network (LAN)
locating 3

M

Mac driver settings
Job Storage 48
managing the printer
overview 54
manual duplex
Mac 45
Windows 42
material restrictions 132, 133
Material Safety Data Sheet (MSDS) 132, 133
memory
included 6
memory chip (toner)
locating 36
memory chip, toner cartridge
description 113, 126
menus
HP Embedded Web Server 56
mercury-free product 132, 133
mobile printing, software
supported 9
multiple pages per sheet
printing (Mac) 45
printing (Windows) 42

N

network settings 60
networks
default gateway 61
HP Web Jetadmin 66
IPv6 address 61
subnet mask 61
supported 6
non-HP supplies 113, 126

O

on/off button
locating 3
online help, control panel 70
online support 70, 113, 131
Open source license 2
operating systems, supported 7
ordering
supplies and accessories 27
orientation
labels 25
output bin
clear jams 78, 85
locating 3

P

pages per minute 6
pages per sheet
selecting (Mac) 45
selecting (Windows) 42
paper
jams 78
loading Tray 1 13
loading Tray 2 17
loading Tray 3 20
selecting 95, 98
Tray 1 orientation 13, 14
Tray 2 orientation 18
Tray 3 orientation 22
paper jams
550-sheet trays 78
duplexer 78
fuser 89, 92
locations 78
output bin 78, 85
rear door 87
Tray 1 78, 79
Tray 2 78, 81
paper pickup problems
solving 74, 75
paper trays
overview 12
part numbers 27
paper type
selecting (Windows) 42
paper types
selecting (Mac) 45
paper, ordering 27
part numbers
accessories 27
replacement parts 28
supplies 27
toner cartridges 27
parts
overview 26
ports
locating 3
potential shock hazard 2
power
consumption 11
power connection
locating 3
power switch
locating 3
print drivers, supported 7
print media
loading in Tray 1 13
print on both sides
Mac 45
manually, Windows 42
Windows 42
print quality 107

printer
overview 1
printing
overview 41
stored jobs 48
printing on both sides
settings (Windows) 42
private printing 48
product number
location 3
protect cartridges 29, 32

R

rear door
clear jams 87
locating 3
recycling 132, 134
electronic hardware 132, 133
replacement parts
part numbers 28
replacing
toner cartridge 36

S

safety statements 140, 141, 143
security features 63
serial number
locating 3
shut down after delay
setting 65
sleep delay
setting 65
software
software license
agreement 113, 126
specifications
electrical and acoustic 11
storage, job
Mac settings 48
store print jobs 48
stored jobs
creating (Mac) 48
creating (Windows) 48
deleting 48, 51
printing 48
storing jobs
with Windows 48
subnet mask 61
supplies
counterfeit 113, 126
low threshold settings 72
non-HP 113, 126
ordering 27
overview 26
part numbers 27
recycling 132, 134
replacing toner cartridge 36
using when low 72
support
online 70, 113, 131
supported operating systems 7
System Health Apps 107
system requirements
HP Embedded Web Server 55

T

Taiwan EMI statement 140, 141
TCP/IP
manually configuring IPv6
parameters 61
technical support
online 70, 113, 131
toner cartridge
components 36
low threshold settings 72
replacing 36
using when low 72
toner cartridges
memory chips 113, 126
non-HP 113, 126
order numbers 36
part numbers 27
recycling 132, 134
See toner cartridges
warranty 113, 125
Tray 1
jams 78, 79
loading envelopes 24
paper orientation 13, 14
Tray 2
jams 78, 81
loading 17
paper orientation 18
Tray 3
loading 20
paper orientation 22
trays
capacity 6
included 6
locating 3
troubleshooting
check toner cartridge
status 95
check toner-cartridge
status 97
jams 78
network problems 108
overview 70
paper feed problems 74
wired network 108
wireless network 110
two-sided printing
settings (Windows) 42

W

warranty
customer self repair 113, 131
license 113, 126
product 113, 114
toner cartridges 113, 125
waste disposal 132, 137
web browser requirements
HP Embedded Web Server 55
Web sites
customer support 70, 113, 131
fraud reports 113, 126
Material Safety Data Sheet (MSDS) 132, 133
websites
HP Web Jetadmin, downloading 66
weight, printer 9
Wi-Fi Direct Print 9
Wi-Fi Direct Printing 52
wireless network
troubleshooting 110
wireless network
interference 110, 112