DLP® Projector

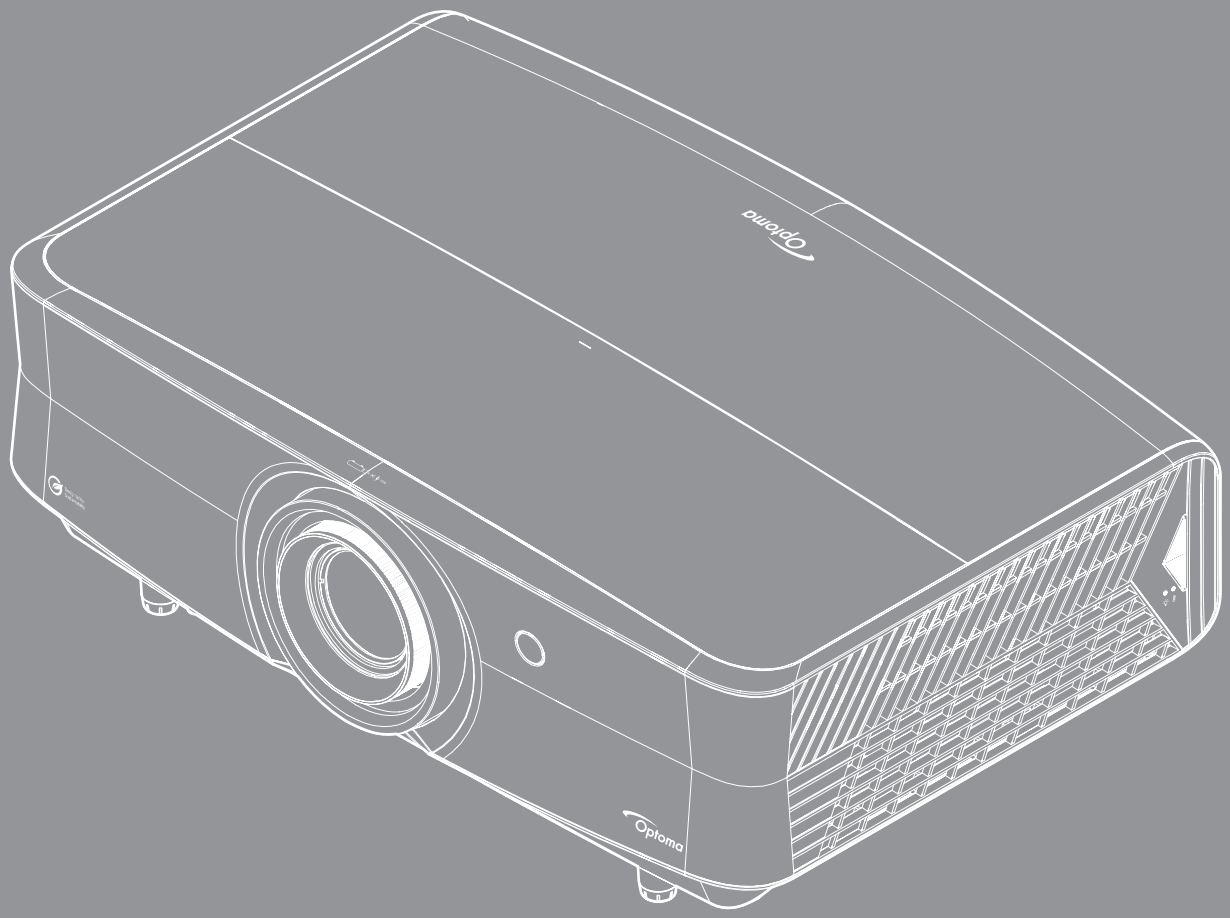

User manual

TABLE OF CONTENTS

SAFETY 4

Important Safety Instruction 4
Battery Safety Instruction 6
Cleaning the Lens 6
Laser Radiation Safety Information 7
Copyright 7
Disclaimer 7
Trademark Recognition 8
FCC 8
Declaration of Conformity for EU countries 9
WEEE 9
CTUVUS 9
Specifications and Warning labels 9

INTRODUCTION 10

Package Overview 10
Standard accessories 10
Product Overview 11
Connections 12
Keypad 13
Remote control 14

SETUP AND INSTALLATION 16

Installing the projector 16
Connecting sources to the projector 18
Adjusting the projector image 19
Remote setup 21

USING THE PROJECTOR 24

Powering on / off the projector 24
Selecting an input source 27
Launcher screen overview 28
Menu navigation and features 29
OSD Menu tree 30
Image menu 37
Display menu 42
Setup menu 45
Audio menu 49
Control menu 50
Information menu 63
System settings 64
Selecting an input source manually 70
Selecting an app 70

ADDITIONAL INFORMATION 73

Compatible resolutions *73*
Projector dimensions and ceiling mount installation *77*
IR remote codes *78*
Troubleshooting *81*
Warning indicators *83*
Specifications *85*
Optoma global offices *86*

SAFETY

	The lightning flash with arrow head within an equilateral triangle is intended to alert the user to the presence of uninsulated "dangerous voltage" within the product's enclosure that may be of sufficient magnitude to constitute a risk of electric shock to persons.
	The exclamation point within an equilateral triangle is intended to alert the user to the presence of important operating and maintenance (servicing) instructions in the literature accompanying the appliance.

Please follow all warnings, precautions and maintenance as recommended in this user's guide.

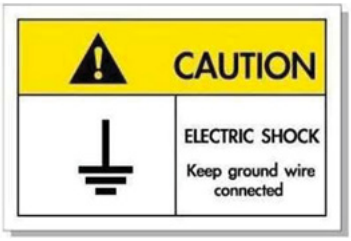

- To avoid electric shock, the unit and its peripherals must be properly grounded (earthed).
- This equipment is equipped with a three-pin grounding-type power plug.
- Do not remove the grounding pin on the power plug.
- This is a safety feature. If you are unable to insert the plug into the outlet, contact an electrician.
- Do not defeat the purpose of the grounding plug.

Important Safety Instruction

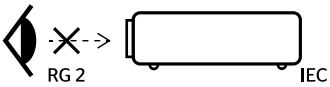

- As with any bright source, do not stare into the direct beam, RG2 IEC 62471-5:2015.
- This projector is class 1 laser product of IEC/EN 60825-1:2014 and risk group 2 with the requirements of IEC 62471-5:2015.
- Supervise children: no staring, and avoid use of optical aids!
- Notice is given to supervise children and to never allow them to stare into the projector beam at any distance from the projector.
- Notice is given to use caution when using the remote control for starting the projector while in front of the projection lens.
- Notice is given to the user to avoid the use of optical aids such as binoculars or telescopes inside the beam.
- Do not block any ventilation openings. To ensure reliable operation of the projector and to protect from over heating, it is recommended to install the projector in a location that does not block ventilation. As an example, do not place the projector on a crowded coffee table, sofa, bed, etc. Do not put the projector in an enclosure such as a book case or a cabinet that restricts air flow.
- To reduce the risk of fire and/or electric shock, do not expose the projector to rain or moisture. Do not install near heat sources such as radiators, heaters, stoves or any other apparatus such as amplifiers that emits heat.
- Do not let objects or liquids enter the projector. They may touch dangerous voltage points and short out parts that could result in fire or electric shock.

- Do not use under the following conditions:
  - In extremely hot, cold or humid environments.
    - (i) Ensure that the ambient room temperature is within 0°C ~ 40°C
    - (ii) Relative humidity is up to 80%
  - In areas susceptible to excessive dust and dirt.
  - Near any appliance generating a strong magnetic field.
  - In direct sunlight.
- Do not use the unit if it has been physically damaged or abused. Physical damage/abuse would be (but not limited to):
  - Unit has been dropped.
  - Power supply cord or plug has been damaged.
  - Liquid has been spilled on to the projector.
  - Projector has been exposed to rain or moisture.
  - Something has fallen in the projector or something is loose inside.
- Do not place the projector on an unstable surface. The projector may fall over resulting in injury or the projector may become damaged.
- Do not block the light coming out of the projector lens when in operation. The light will heat the object and may melt, cause burns or start a fire.
- Please do not open or disassemble the projector as this may cause electric shock.
- Do not attempt to service the unit yourself. Opening or removing covers may expose you to dangerous voltages or other hazards. Please call Optoma before you send the unit for repair.
- See projector enclosure for safety related markings.
- The unit should only be repaired by authorized service personnel.
- Only use attachments/accessories specified by the manufacturer.
- Do not look into straight into the projector lens during operation. The bright light may harm your eyes.
- This projector will detect the life of the light source itself.
- When switching the projector off, please ensure the cooling cycle has been completed before disconnecting power. Allow 90 seconds for the projector to cool down.
- Turn off and unplug the power plug from the AC outlet before cleaning the product.
- Use a soft dry cloth with mild detergent to clean the display housing. Do not use abrasive cleaners, waxes or solvents to clean the unit.
- Disconnect the power plug from AC outlet if the product is not being used for a long period of time.
- Do not setup the projector in places where it might be subjected to vibration or shock.
- Do not touch the lens with bare hands.
- Remove battery/batteries from remote control before storage. If the battery/batteries are left in the remote for long periods, they may leak.
- Risk of fire or explosion if the battery is replaced by an incorrect type.
- Do not use or store the projector in places where smoke from oil or cigarettes may be present, as it can adversely affect the quality of the projector performance.
- Please follow the correct projector orientation installation as non standard installation may affect the projector performance.
- Use a power strip and or surge protector. As power outages and brown-outs can KILL devices.

Battery Safety Instruction

⚠ WARNING

- **INGESTION HAZARD**: This product contains a button cell or coin battery.
- **DEATH** or serious injury can occur if ingested.
- A swallowed button cell or coin battery can cause **Internal Chemical Burns** in as little as **2 hours**.
- **KEEP** new and used batteries **OUT OF REACH of CHILDREN**
- **Seek immediate medical attention** if a battery is suspected to be swallowed or inserted inside any part of the body.

Cleaning the Lens

- Before cleaning the lens, be sure to turn off the projector and unplug the power cord to allow it to completely cool down.
- Use a compressed air tank to remove the dust.
- Use a special cloth for cleaning lens and gently wipe the lens. Do not touch the lens with your fingers.
- Do not use alkaline/acid detergents or volatile solvents such as alcohol for cleaning lens. If the lens is damaged due to the cleaning process, it is not covered by the warranty.

CAUTION! Hot surface, Do not touch

- Do not place your hands, face, or other objects in front of the projector lens while the projector is operating. Doing so can cause the object to get extremely hot, and possibly resulting in a fire or damage due to the heat emitted from the light output. Things placed in front of the lens may overheat and burn or start a fire.
- Do not spray flammable gas to get rid of dust and dirt that accumulate in the lens. Doing so could cause a fire.

Warning: Do not use a spray containing flammable gases to remove dust or dirt from the lens. This may cause a fire due to excessive heat inside the projector.

Warning: Do not clean the lens if the projector is warming up as this may cause the lens' surface film to peel off.

Warning: Do not wipe or tap the lens with a hard object.

Laser Notice

IEC 60825-1:2014/EN 60825-1+A11/EN50689:2021 CLASS 1 CONSUMER LASER PRODUCT, IEC 62471-5:2015 RISK GROUP 2.

The product's intended use as a consumer laser product and compliant with EN 50689:2021.

CLASS 1 CONSUMER LASER PRODUCT

EN 50689:2021

Laser Radiation Safety Information

- Complies with 21 CFR 1040.10 and 1040.11 except for conformance as a Risk Group 2 LIP as defined in IEC 62471-5:Ed. 1.0. For more information see Laser Notice No. 57, dated May 8, 2019.
- IEC 60825-1:2014/EN 60825-1+A11/EN50689:2021 CLASS 1 CONSUMER LASER PRODUCT, IEC 62471-5:2015 RISK GROUP 2

IEC 60825-1:2014, EN 60825-1:2014+A11:2021, EN 50689:2021 CLASS 1 CONSUMER LASER PRODUCT RISK GROUP 2, Complies with 21 CFR 1040.10 and 1040.11 except for conformance as a Risk Group 2 LIP as defined in IEC 62471-5:Ed.1.0. For more information see Laser Notice No. 57, dated May 8, 2019.
IEC 60825-1:2014 等級1雷射產品RG2危險等級
IEC 60825-1:2014 1类激光产品RG2危险等级

WARNING: MOUNT ABOVE THE HEADS OF CHILDREN!
Do not look into the beam less than 1m.
No direct eye exposure to the beam is permitted.

"AVERTISSEMENT:INSTALLER AU-DESSUS DE LA TETE DES ENFANTS."
Avertissement supplémentaire contre l'exposition oculaire pour des expositions à une distance de moins de 1m.

「警告：安裝高於兒童頭頂！」
請勿在距離小於1米的範圍內直視光束，嚴禁眼睛直接暴露於光束中。

「警告：安裝高于儿童头顶！」
请勿在距离小于1米的范围内直视光束，严禁眼睛直接暴露于光束中。

- Additional instructions to supervise children, no staring, and not use optical aids.
- Additional instructions to install above the reach of children.
- WARNING: MOUNT ABOVE THE HEADS OF CHILDREN. The use of a ceiling mount is recommended with this product to place it above the eyes of children.
- Caution - use of controls or adjustments or performance of procedures other than those specified herein may result in hazardous radiation exposure.
- When turning on the projector, make sure no one within projection range is looking at the lens.
- Keep any items (magnifying glass etc.) out of the light path of the projector. The light path being projected from the lens is extensive, therefore any kind of abnormal objects that can redirect light coming out of the lens, can cause an unpredictable outcome such as a fire or injury to the eyes.
- Any operation or adjustment not specifically instructed by the user's guide creates the risk of hazardous laser radiation exposure.
- Do not open or disassemble the projector as this may cause damage by the exposure of laser radiation.
- Do not stare into beam when the projector is on. The bright light may result in permanent eye damage.

Not following the control, adjustment or operation procedure may cause damage by the the exposure of laser radiation.

Copyright

This publication, including all photographs, illustrations and software, is protected under international copyright laws, with all rights reserved. Neither this manual, nor any of the material contained herein, may be reproduced without written consent of the author.

© Copyright 2024

Disclaimer

The information in this document is subject to change without notice. The manufacturer makes no representations or warranties with respect to the contents hereof and specifically disclaims any implied warranties of merchantability or fitness for any particular purpose. The manufacturer reserves the right to revise this publication and to make changes from time to time in the content hereof without obligation of the manufacturer to notify any person of such revision or changes.

Trademark Recognition

Kensington is a U.S. registered trademark of ACCO Brand Corporation with issued registrations and pending applications in other countries throughout the world.

HDMI, the HDMI Logo, and High-Definition Multimedia Interface are trademarks or registered trademarks of HDMI Licensing LLC in the United States and other countries.

DLP®, DLP Link and the DLP logo are registered trademarks of Texas Instruments and BrilliantColor™ is a trademark of Texas Instruments.

Dolby, Dolby Vision, and the double-D symbol are registered trademarks of Dolby Laboratories Licensing Corporation. Manufactured under license from Dolby Laboratories Licensing Corporation. Confidential unpublished works. Copyright © 2013–2024 Dolby Laboratories. All rights reserved.

This product complies with the HDR10+ Projector Device Version 1.1. The HDR10+™ logo is a trademark or registered trademark of HDR10+ Technologies, LLC in the United States and other countries.

All other product names used in this manual are the properties of their respective owners and are Acknowledged.

FCC

This device has been tested and found to comply with the limits for a Class B digital device pursuant to Part 15 of the FCC rules. These limits are designed to provide reasonable protection against harmful interference in a residential installation. This device generates, uses and can radiate radio frequency energy and, if not installed and used in accordance with the instructions, may cause harmful interference to radio communications.

However, there is no guarantee that interference will not occur in a particular installation. If this device does cause harmful interference to radio or television reception, which can be determined by turning the device off and on is encouraged to try to correct the interference by one or more of the following measures:

- Reorient or relocate the receiving antenna.
- Increase the separation between the device and receiver.
- Connect the device into an outlet on a circuit different from that to which the receiver is connected.
- Consult the dealer or an experienced radio/television technician for help.

Notice: Shielded cables

All connections to other computing devices must be made using shielded cables to maintain compliance with FCC regulations.

Caution

Changes or modifications not expressly approved by the manufacturer could void the user's authority, which is granted by the Federal Communications Commission, to operate this projector.

Operation Conditions

This device complies with Part 15 of the FCC Rules. Operation is subject to the following two conditions:

1. This device may not cause harmful interference and

2. This device must accept any interference received, including interference that may cause undesired operation.

Notice: Canadian users

This Class B digital apparatus complies with Canadian ICES-003.

Remarque à l'intention des utilisateurs canadiens

Cet appareil numerique de la classe B est conforme a la norme NMB-003 du Canada.

Declaration of Conformity for EU countries

- EMC Directive 2014/30/EU (including amendments)
- Low Voltage Directive 2014/35/EU
- RED 2014/53/EU (if product has RF function)

WEEE

Disposal instructions

Do not throw this electronic device into the trash when discarding. To minimize pollution and ensure utmost protection of the global environment, please recycle it.

CTUVUS

Specifications and Warning labels

Specifications and Warning labels are placed at the following location:

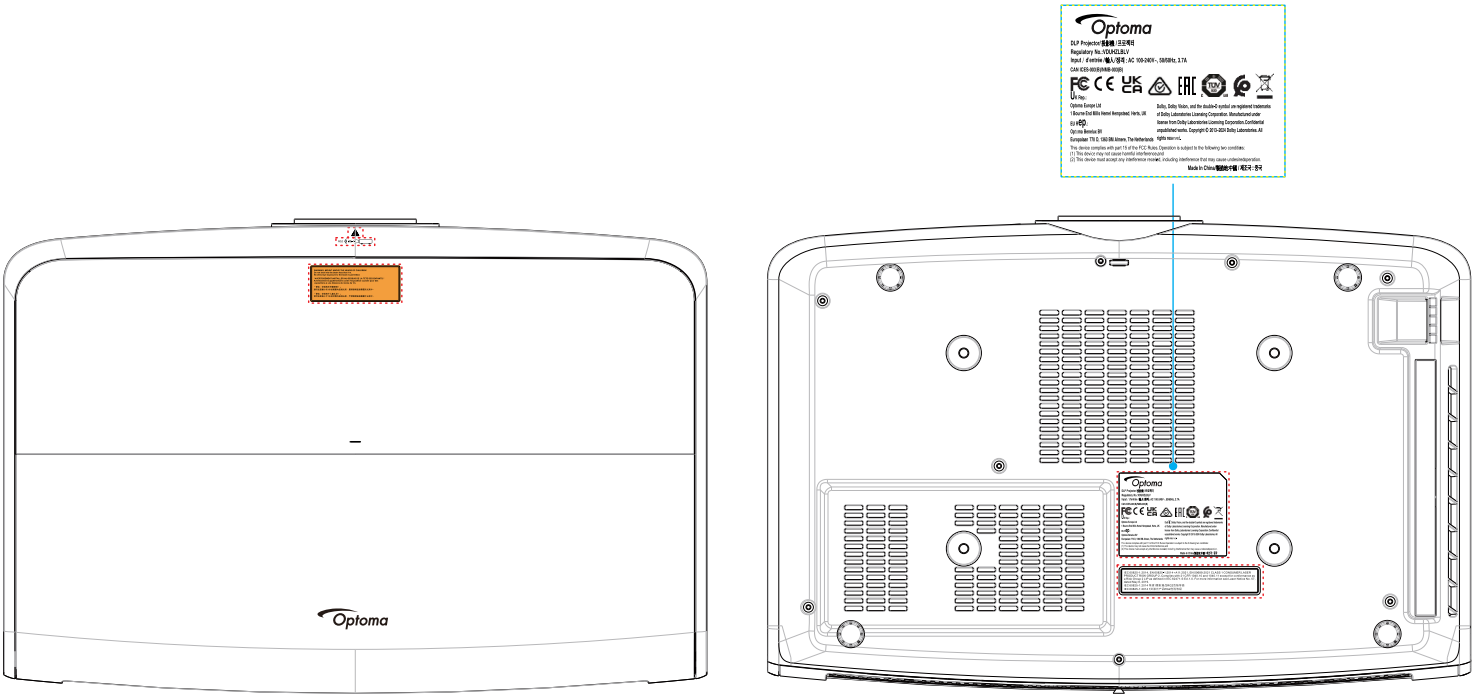

Note: *For power supply, power ratings, and product information, please refer to the label on the bottom of the product.*

INTRODUCTION

Thank you for purchasing an Optoma laser projector. For full list of features please visit the product page on our website, where you will also find additional information and documentation such as FAQs.

Package Overview

Carefully unpack and verify that you have the items listed below under standard accessories. Some of the items under optional accessories may not be available depending on the model, specification and your region of purchase. Please check with your place of purchase. Some accessories may vary from region to region.

The warranty card is only supplied in some specific regions. Please consult your dealer for detailed information.

Standard accessories

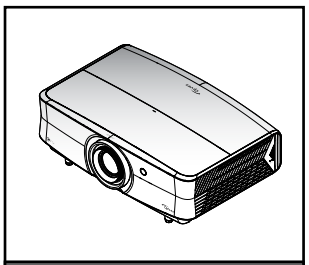

Projector

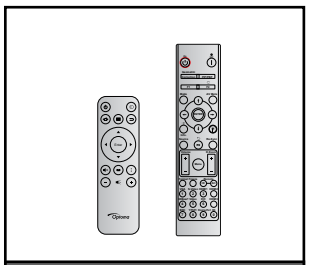

Remote control

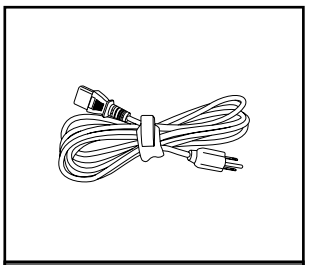

Power cable

☑ Quick Start User Manual

Documentation

Note:

- *For access to the setup information, user manual, warranty information, and product updates – please scan the QR Code or visit the following URL: https://www.optoma.com/support/download*
- *Accessories may differ in different countries.*
- *Wi-Fi dongle is an optional accessory.*

INTRODUCTION

Product Overview

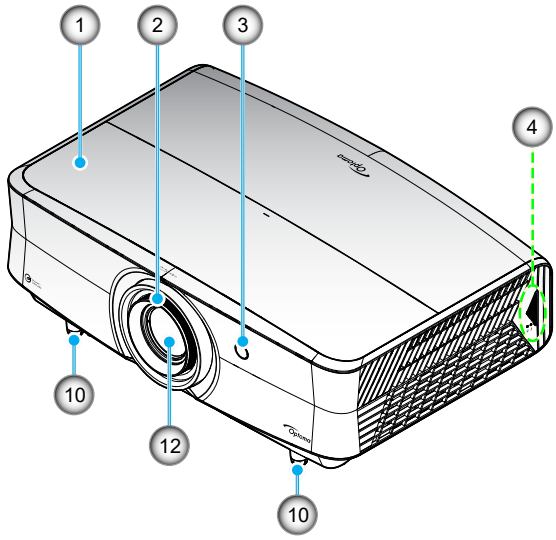

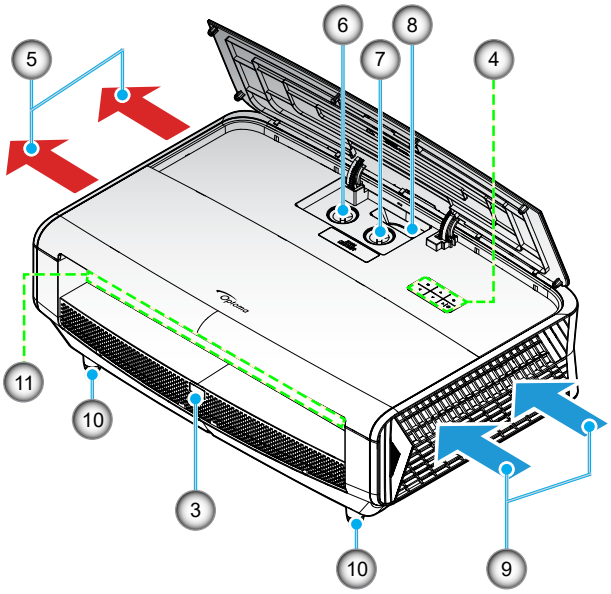

Note:

- *Do not block projector intake and exhaust vents.*
- *When operating the projector in an enclosed space, allow at least 30 cm clearance around the intake and exhaust vents.*

No	Item	No	Item
1.	Top Cover	7.	Lens Shift Dial (Vertical)
2.	Focus Ring	8.	Zoom Lever
3.	IR Receiver	9.	Ventilation (inlet)
4.	Keypad	10.	Tilt-Adjustment Foot
5.	Ventilation (outlet)	11.	Input / Output
6.	Lens Shift Dial (Horizontal)	12.	Lens

INTRODUCTION

Connections

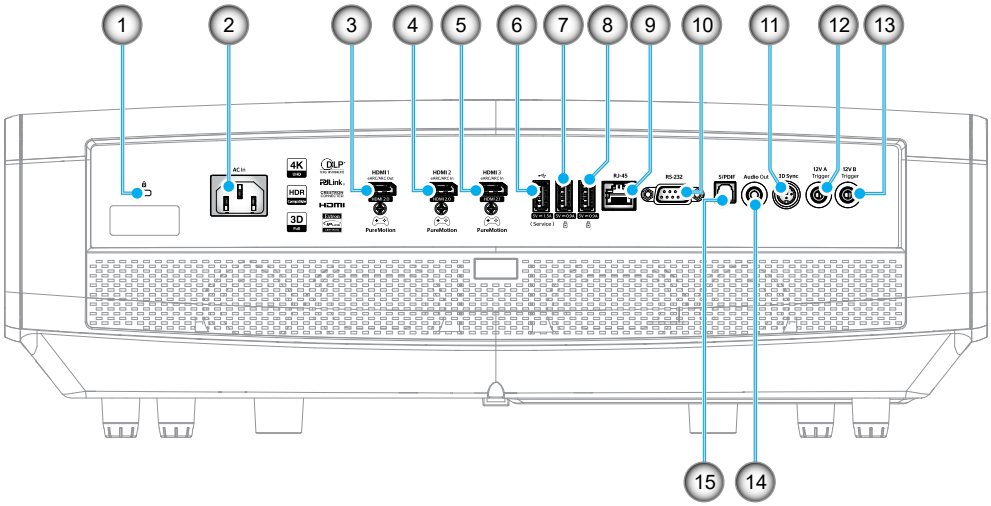

No	Item	No	Item
1.	Kensington™ Lock Port	9.	RJ-45 Connector (*4)
2.	Power Socket	10.	RS232 Connector
3.	HDMI 1 (v2.0) Connector	11.	3D Sync Connector
4.	HDMI 2 (v2.0) Connector	12.	12V OUT Connector
5.	HDMI 3 (v2.1) Connector (*1)	13.	12V OUT Connector
6.	Service and USB Power Out (5V⎓1.5A) Connector (*2)	14.	AUDIO OUT Connector
7.	USB Power Out (5V⎓0.9A) (*3)	15.	S/PDIF Connector
8.	USB Power Out (5V⎓0.9A) (*3)		

Note: *(*1) Support up to 3840 x 2160/120hz and support HDR10+.*

*(*2) For firmware upgrade.*

*(*3) Support Multi-media and WiFi dongle.*

*(*4) Support LAN control, IoT control, and FOTA(FW upgrade).*

INTRODUCTION

Keypad

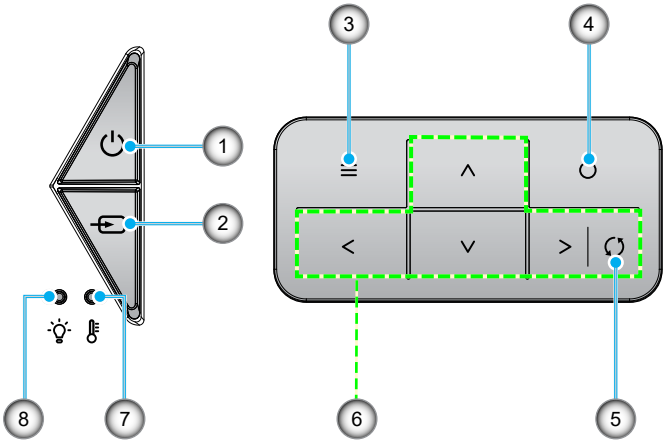

No	Item	No	Item
1.	Power and On/Standby LED	5.	Re-Sync
2.	Source	6.	Four Directional Select Keys
3.	Menu	7.	Temp LED
4.	Enter	8.	Laser LED

INTRODUCTION

Remote control

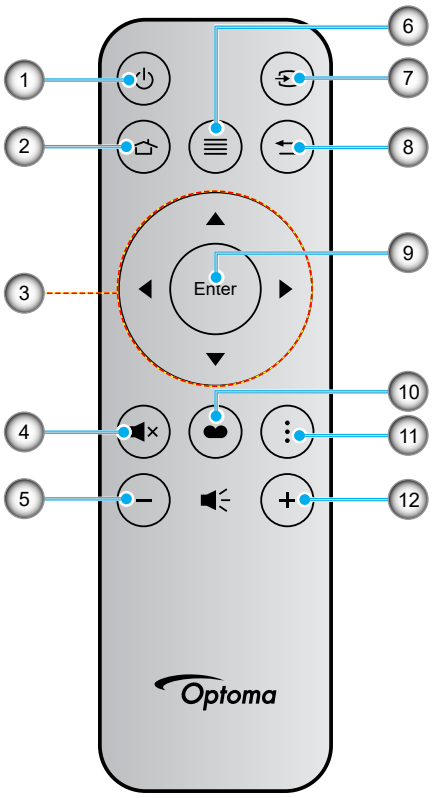

No	Item	No	Item
1.	Power On / Off	7.	Source
2.	Home	8.	Return
3.	Four Directional Select Keys	9.	Enter
4.	Mute	10.	Display Mode
5.	Volume -	11.	APP menu
6.	Menu	12.	Volume +

Note:

- *Some keys may have no function for models that do not support these features.*
- *Before using the remote control for the first time, remove the transparent insulation tape. For more information on battery installation, refer to page 21.*

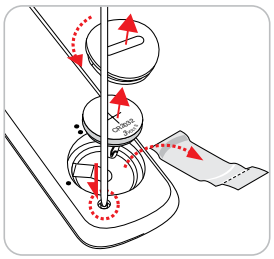

- *The inclusion of the battery for the remote control may vary depending on the region.*

INTRODUCTION

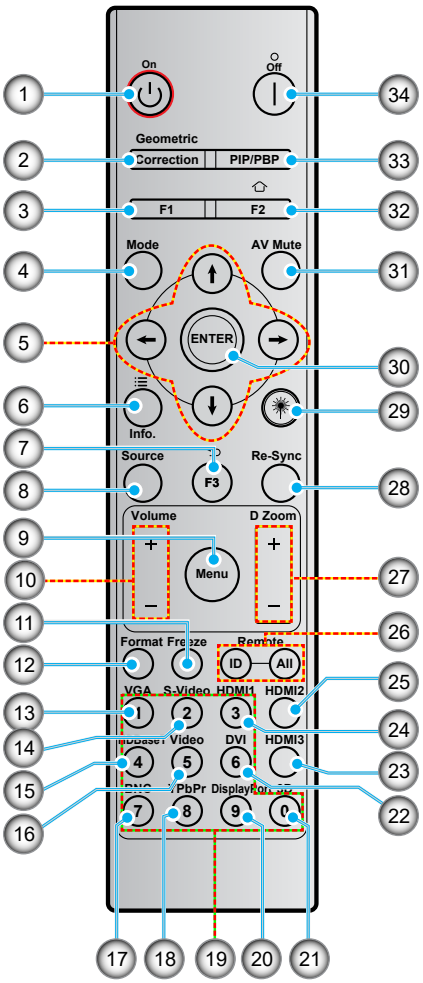

No	Item	No	Item
1.	Power on	18.	YPbPr (not supported)
2.	Geometric Correction	19.	Numeric keypad (0-9)
3.	Function button (F1) (Assignable)	20.	Display port (not supported)
4.	Mode	21.	3D
5.	Four directional select keys	22.	DVI (not supported)
6.	APP settings	23.	HDMI3
7.	Back	24.	HDMI1
8.	Source	25.	HDMI2
9.	Menu	26.	Remote ID / Remote all
10.	Volume - / +	27.	Digital Zoom - / +
11.	Freeze	28.	Re-sync
12.	Format (Aspect Ratio)	29.	Laser pointer (*)
13.	VGA (not supported)	30.	Enter
14.	S-Video (not supported)	31.	AV Mute
15.	HDBase-T (not supported)	32.	Home
16.	Video (not supported)	33.	PIP/PBP (not supported)
17.	BNC (not supported)	34.	Power off

Note:

- *Some keys may have no function for models that do not support these features.*
- *(*) Function availability depends on the region.*

SETUP AND INSTALLATION

Installing the projector

Your projector is designed to be installed in one of four possible positions.

Your room layout or personal preference will dictate which installation location you select. Take into consideration the size and position of your screen, the location of a suitable power outlet, as well as the location and distance between the projector and the rest of your equipment.

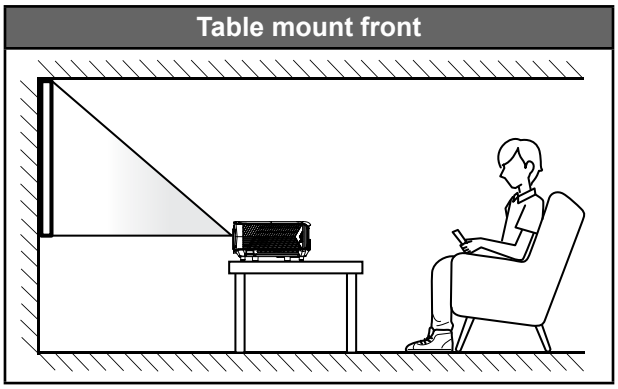

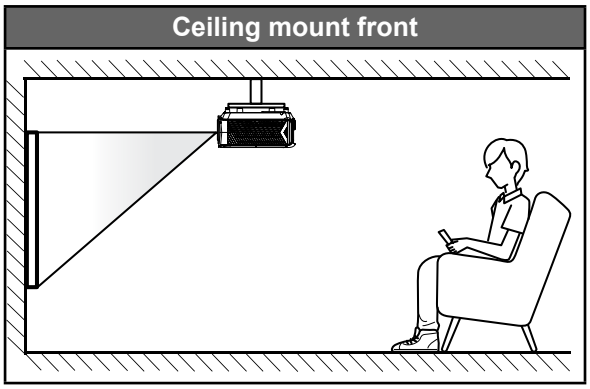

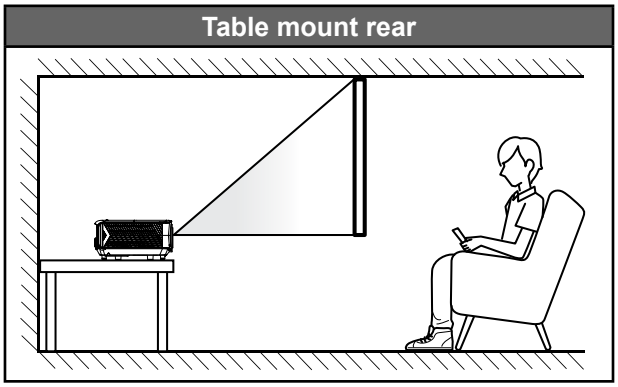

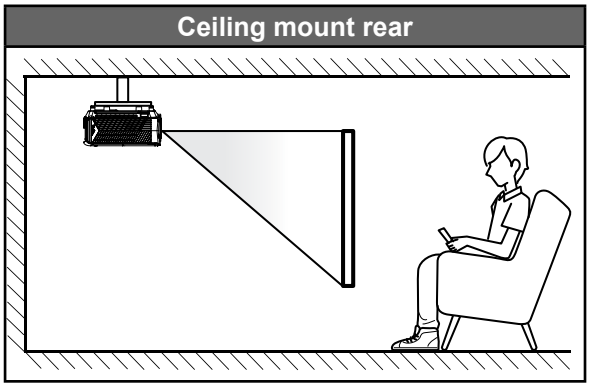

Projector should be placed flat on a surface and 90 degrees / perpendicular to the screen.

- How to determine projector location for a given screen size, please refer to distance table on page *76*.
- How to determine screen size for a given distance, please refer to distance table on page *76*.

Note: *The further away the projector is placed from the screen the projected image size increases and vertical offset also increases proportionally.*

SETUP AND INSTALLATION

Projector installation notice

- 360° free orientation operation

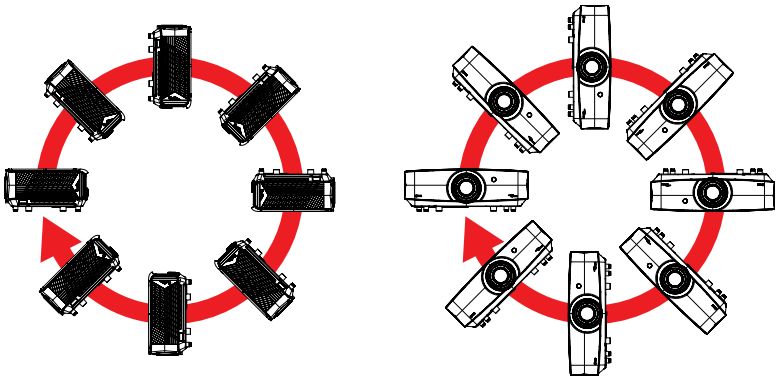

- Allow at least 30 cm clearance around the exhaust vent.

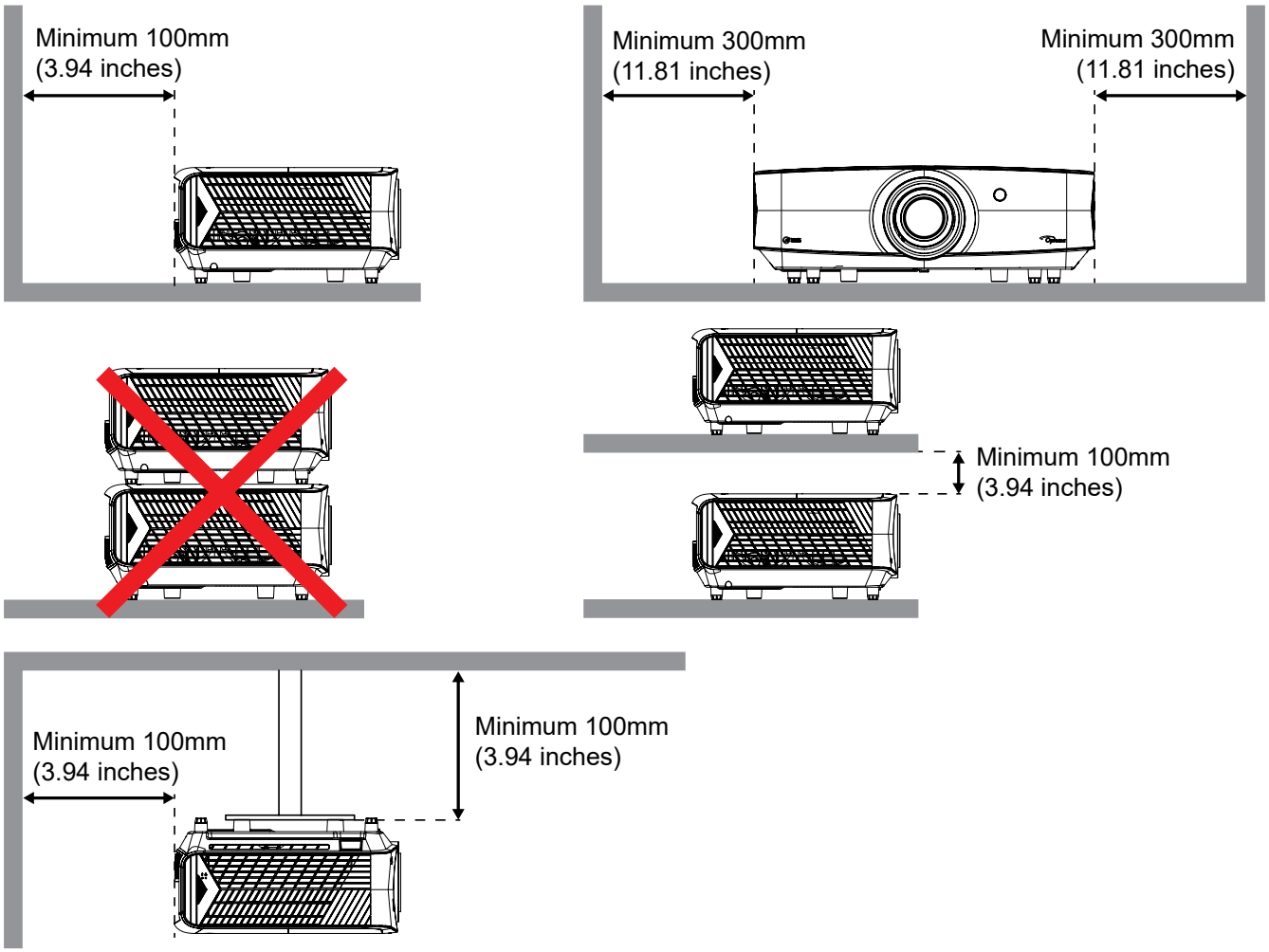

- Ensure that the intake vents do not recycle hot air from the exhaust vent.
- When operating the projector in an enclosed space, ensure that the surrounding air temperature within the enclosure does not exceed operation temperature while the projector is running, and the air intake and exhaust vents are unobstructed.
- All enclosures should pass a certified thermal evaluation to ensure that the projector does not recycle exhaust air, as this may cause the device to shutdown even if the enclosure temperature is with the acceptable operation temperature range.

SETUP AND INSTALLATION

Connecting sources to the projector

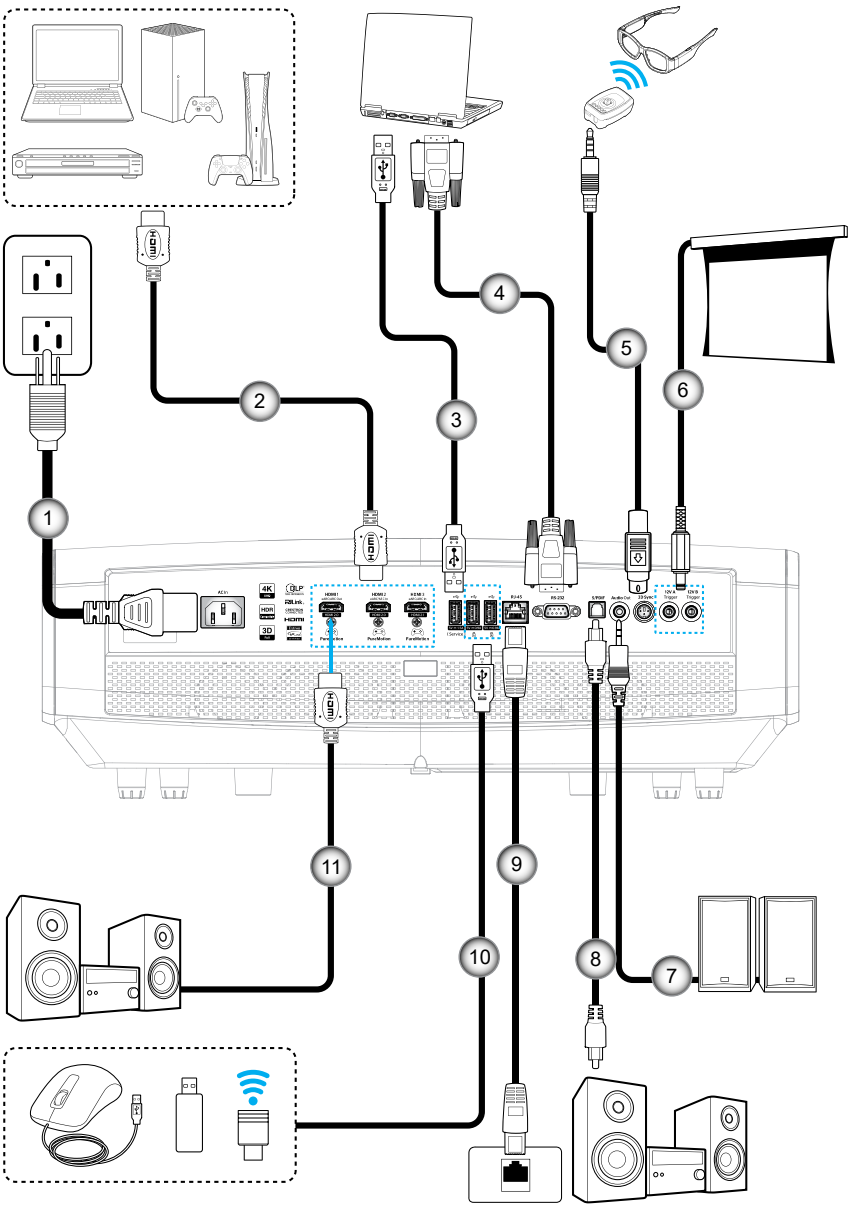

No	Item	No	Item
1.	Power Cord	7.	Speaker Cable
2.	HDMI Cable	8.	S/PDIF Out Cable
3.	USB Cable	9.	RJ-45 Cable
4.	RS232 Cable	10.	USB Cable
5.	3D Emitter Cable	11.	HDMI Cable
6.	12V DC Jack		

Note: *To ensure the best image quality and avoid connection errors, we recommend the use of High Speed or Premium Certified HDMI cables up to 5 meters.*

SETUP AND INSTALLATION

Adjusting the projector image

Image height

The projector is equipped with elevator feet for adjusting the image height.

1. Locate the adjustable foot you wish to adjust on the underside of the projector.
2. Rotate the adjustable foot clockwise or counterclockwise to raise or lower the projector.

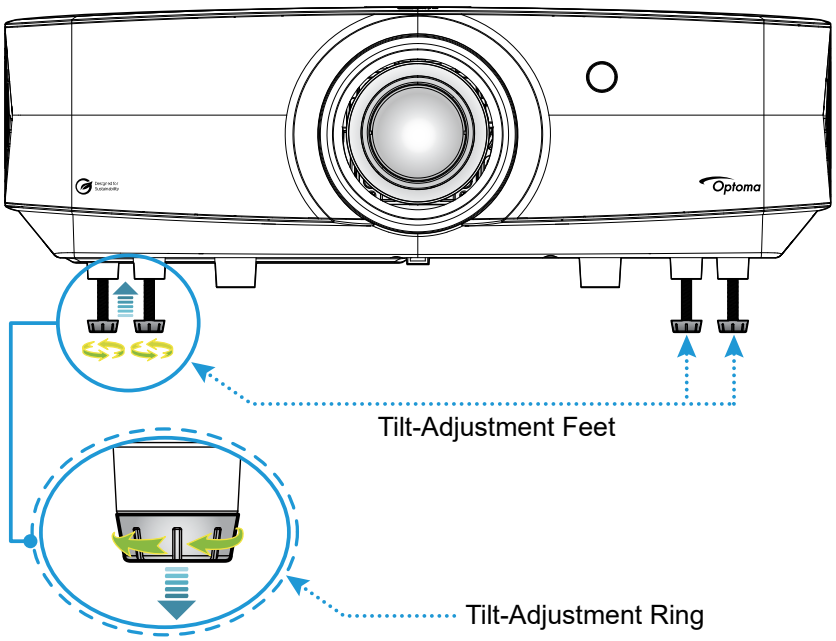

SETUP AND INSTALLATION

Zoom, lens shift, and focus

- To adjust the image size and position, do the following:

  a. Push down firmly on the middle of the top cover to unlock the latch. Then open the top cover.

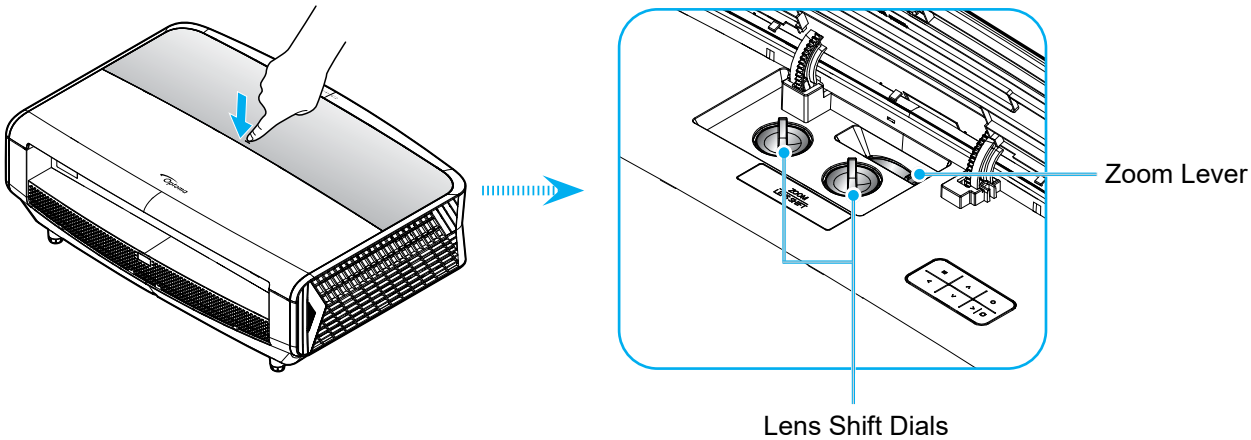

  b. To adjust the image size, turn the zoom lever clockwise or counterclockwise to increase or decrease the projected image size.

  c. To adjust the image position, turn the lens shift dial clockwise or counterclockwise to adjust the position of the projected image vertically or horizontally.

- To adjust the focus, turn the focus ring clockwise or counterclockwise until the image is sharp and legible.

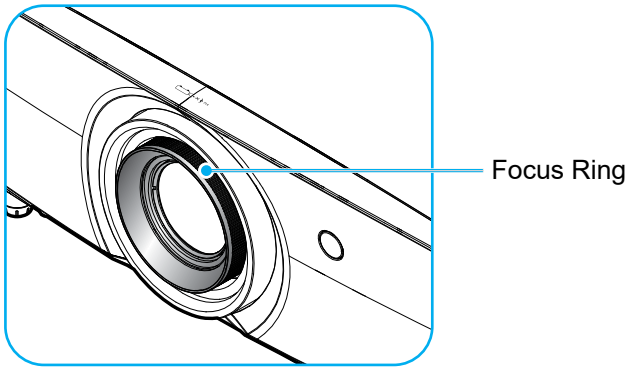

Note: *The projector will focus at a distance of 1m to 10m.*

SETUP AND INSTALLATION

Remote setup

Installing / replacing the battery

1. Push the button and unscrew the battery cover. Use a coin to turn the battery cover counterclockwise until the cover opens.
2. Install new battery into the compartment.
   Remove the old battery and install new one (CR2032). Ensure that the side with a “+” is facing up.
3. Put the cover back. Then use a coin to turn the battery cover clockwise to lock it in place.

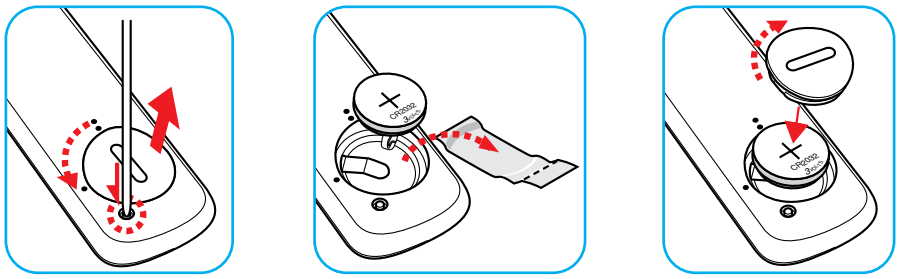

CAUTION:

To ensure safe operation, please observe the following precautions:

- Use CR2032 type battery.
- Avoid contact with water or liquid.
- Do not expose the remote control to moisture or heat.
- Do not drop the remote control.
- If the battery has leaked in the remote control, carefully wipe the case clean and install new battery.
- Risk of an explosion if battery is replaced by an incorrect type.
- Dispose of used battery according to the instructions.

Warning: Do not ingest battery, Chemical Burn Hazard.

- This product contains a coin / button cell battery. If the coin / button cell battery is swallowed, it can cause severe internal burns in just 2 hours and can lead to death.

Warning: Keep new and used batteries away from children.

- If the battery compartment does not close securely, stop using the product and keep it away from children.If you think batteries might have been swallowed or placed inside any part of the body, seek immediate medical attention.

SETUP AND INSTALLATION

Installing / replacing the batteries

Two AAA size batteries are supplied for the remote control.

1. Remove the battery cover on the back of the remote control.
2. Insert AAA batteries in the battery compartment as illustrated.
3. Replace back cover on remote control.

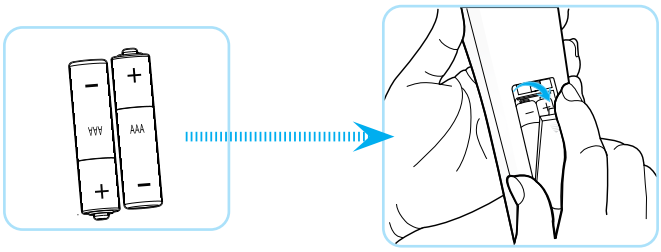

Note: *Replace only with the same or equivalent type batteries.*

CAUTION: To ensure safe operation, please observe the following precautions:

- Replacement of a battery with an incorrect type that can defeat a safeguard (AAA size battery type).
- Disposal of a battery into a fire, hot oven, mechanically crushing or cutting of a battery, may result in an explosion.
- Leaving a battery in an extremely high temperature surrounding environment that can result in an explosion or the leakage of flammable liquid or gas.
- A battery subjected to extremely low air pressure that may result in an explosion or the leakage of flammable liquid or gas.
- Do not mix old and new batteries. Mixing old and new batteries can shorten the life of new batteries or cause a chemical leak in the old batteries.
- Remove batteries as soon as they are depleted. Chemicals that leak from a battery which comes into contact with your skin can cause a rash. If you find any chemical leakage, wipe thoroughly with a cloth.
- The batteries supplied with this product may have a shorter life expectancy due to storage conditions.
- If you are not using the remote control for an extended period of time, please remove the batteries to reduce risk of chemical leak.

SETUP AND INSTALLATION

Effective range

Infra-Red (IR) remote control sensor is located on the top and front sides of the projector. Ensure to hold the remote control at an angle within 30 degrees perpendicular to the projector's IR remote control sensor to function correctly. The distance between the remote control and the sensor should not be longer than 6 meters (19.7 feet) when holding in an angle ±15° and not longer than 8 meters (26.2 feet) when aiming the sensor at 0°.

- Make sure that there are no obstacles between the remote control and the IR sensor on the projector that might obstruct the infra-red beam.
- Make sure the IR transmitter of the remote control is not being shined by sunlight or fluorescent lamps directly.
- Please keep the remote controller away from fluorescent lamps for over 2 m or the remote controller may malfunction.
- If the remote control is close to Inverter-Type fluorescent lamps, it might become ineffective from time to time.
- If the remote control and the projector are within a very short distance, the remote control might become ineffective.
- When you aim at the screen, the effective distance is less than 5 m from the remote control to the screen and reflecting the IR beams back to the projector. However, the effective range might change according to screens.

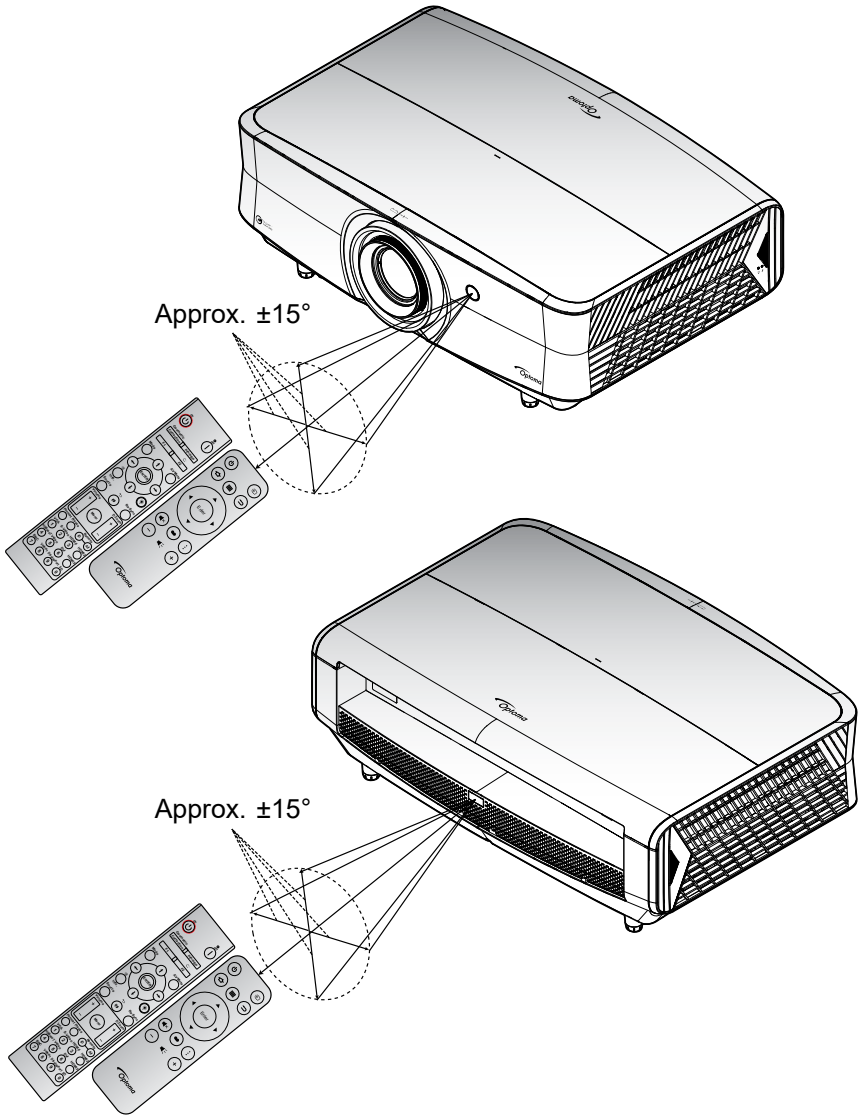

USING THE PROJECTOR

Powering on / off the projector

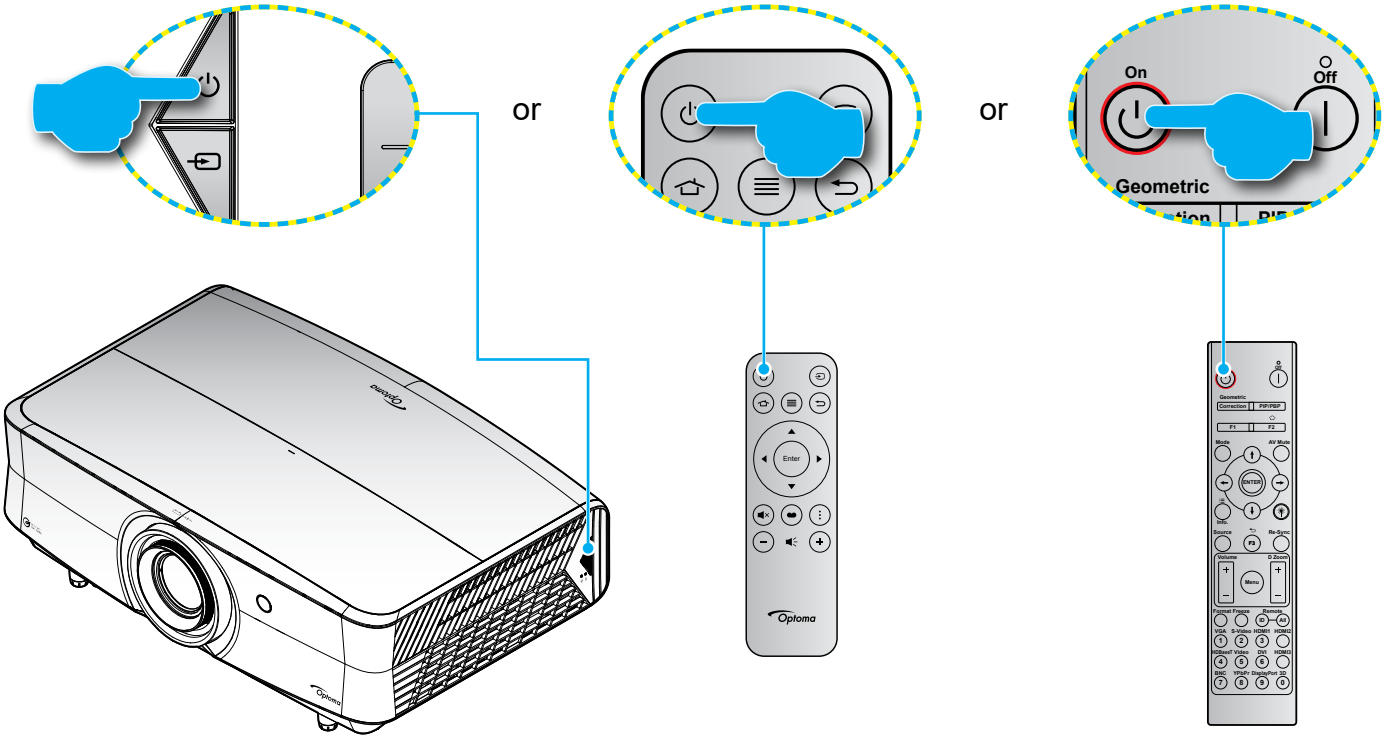

Powering on

1. Securely connect the power lead and signal/source cable. When connected, the Power LED will start breathing blue light.
2. Turn on the projector by pressing the "⏻" button on the projector keypad or the remote control. The Power LED will start flashing blue.
   The Optoma boot logo and then animation are displayed on the screen.

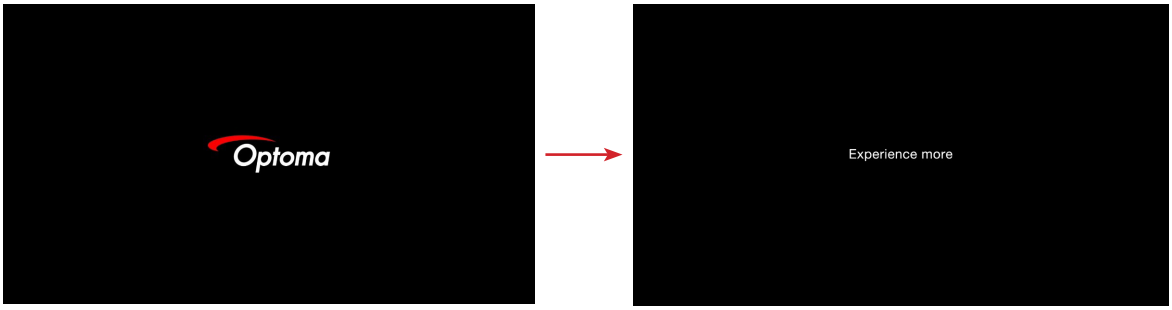

3. A launcher screen will display in approximately 10 seconds and the Power LED will turn steady blue.

USING THE PROJECTOR

The first time the projector is turned on, you will be prompted to do the initial setup including selecting the projection orientation, preferred language, configuring network settings, and more. Once the ***Setup Complete!*** screen appears, it indicates the projector is ready to use.

[Projection screen]

[Language screen]

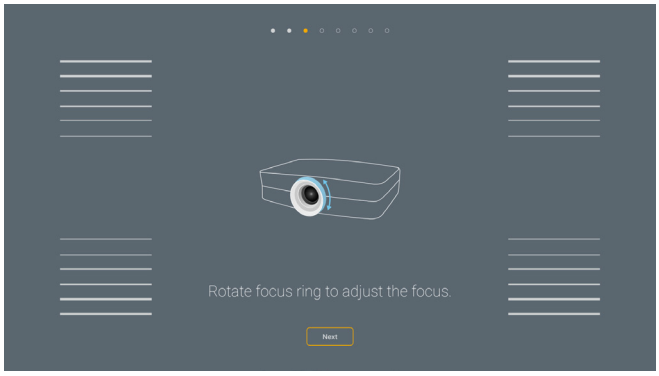

[Focus adjustment screen]

[Wi-Fi dongle installation screen]

[Wi-Fi dongle installation screen (continued)]

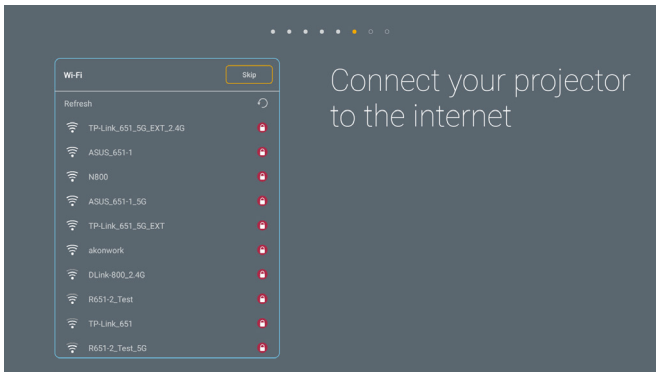

[Network screen]

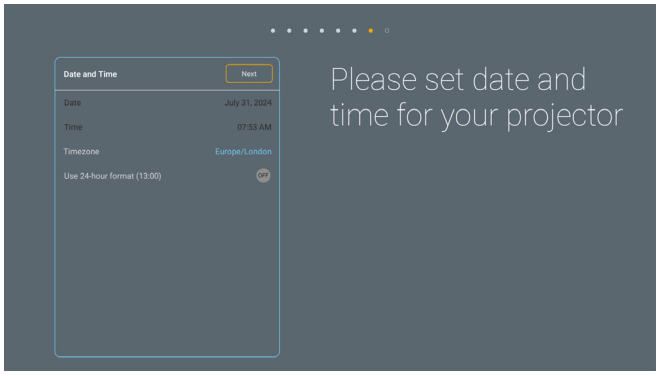

[Date and time screen]

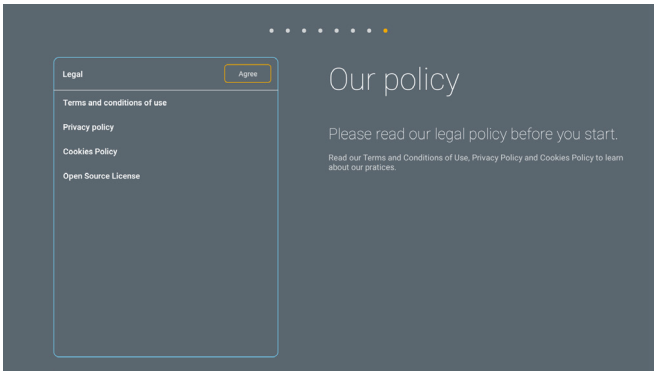

[Regulation screen]

USING THE PROJECTOR

Powering off

1. Turn off the projector by pressing the ⏻ button on the projector keypad or the remote control.
2. The following message will be displayed:

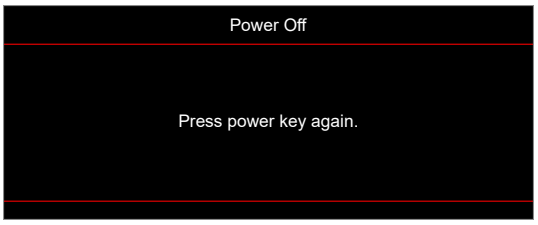

3. Press the ⏻ button again to confirm, otherwise the message will disappear after 15 seconds. When you press the ⏻ button for the second time, the projector will shut down.
4. When the projector is in standby mode, simply press the ⏻ button again to turn on the projector.
5. Disconnect the power lead from the electrical outlet and the projector.

Note: *It is not recommended that the projector is turned on immediately, right after a power off procedure.*

USING THE PROJECTOR

Selecting an input source

Turn on the connected source that you want to display on the screen, such as computer, notebook, video player, etc. The projector will automatically detect the source. If multiple sources are connected, press the button on the projector keypad or the remote control to select the desired input.

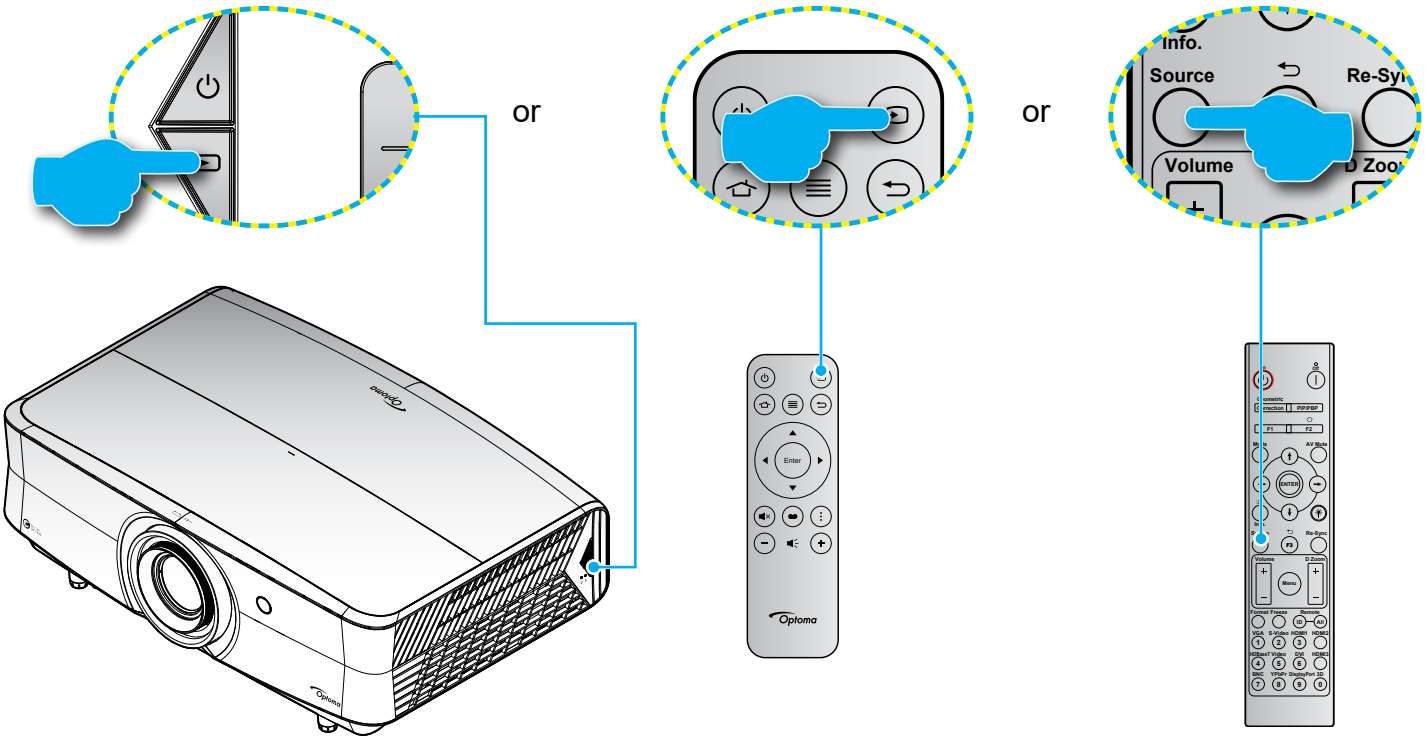

USING THE PROJECTOR

Launcher screen overview

The Launcher screen is the Home page to start the projector. It contains system status, shortcuts to access various apps, and more.

To navigate the Launcher screen, simply use the buttons on the remote control.

You can return to the Home screen at any time by pressing " ⌂ " on the remote control, regardless of your position in the user interface.

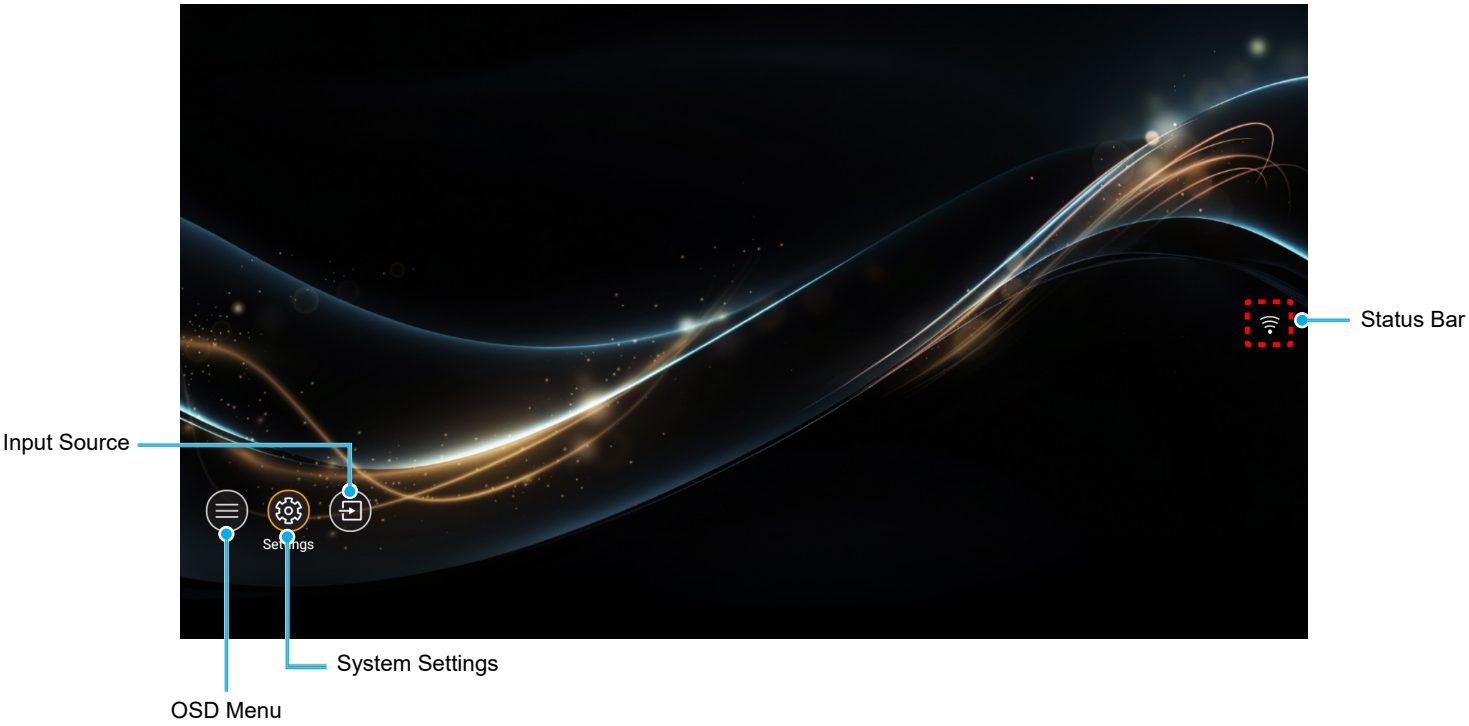

Note: *The selected menu or item is highlighted in yellow color, for example "Settings" on the image above.*

USING THE PROJECTOR

Menu navigation and features

The projector has multilingual on-screen display menus that allow you to make image adjustments and change a variety of settings.

General menu navigation

Operation	Using the Remote Control	Using the Projector Keypad
Open the OSD menu	Press the ≣ button	Press the ≡ button
Select an item	Press the ▲/▼ button	Press the ∧/∨ button
Enter the submenu	Press the **Enter** button	Press the ○ button
Adjust the setting	Press the ▲/▼/◀/▶ button	Press the ∧/∨/<|> button
Confirm the selection	Press the **Enter** button	Press the ○ button
Move to the previous item	Press the ≣ button	Press the ≡ button
Close the OSD menu	Press the ≣ button	Press the ≡ button

Note: *You can also open the OSD menu by selecting **OSD menu** (≣) on the Home screen.*

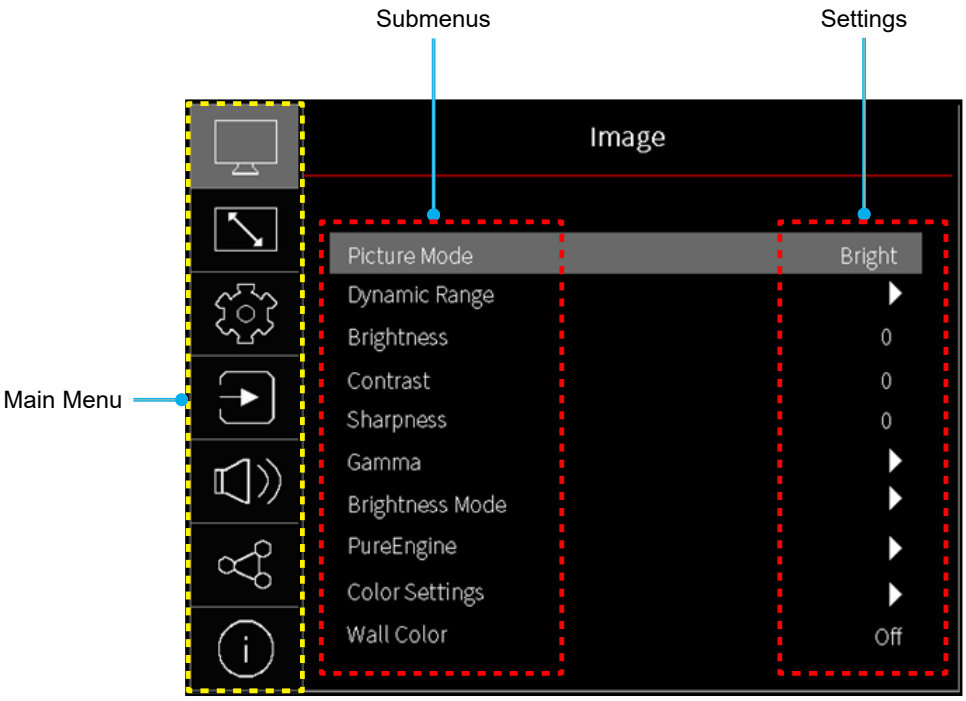

OSD Menu tree

Note: The OSD menu tree items and features are subject to models and region. Optoma reserve the right to add or remove items to improve product performance without notice.

Main Menu	Sub Menu	Sub Menu 2	Sub Menu 3	Sub Menu 4	Values
Image	Picture Mode				Vivid
					HDR
					HLG
					Cinema
					Game
					Reference
					WCG
					Bright
					Dolby Vision Bright
					Dolby Vision Dark
					Dolby Vision Vivid
					HDR10+
					AI-PQ
					3D
					ISF Day
					ISF Night
					ISF Day HDR
					ISF Night HDR
					ISF 3D
	Dynamic Range		HDR / HLG		Auto / Off
	Brightness				-50 ~ 50
	Contrast				-50 ~ 50
	Sharpness				1 ~ 15
	Gamma				Film
					Graphics
					1.8
					2.0
					2.2
					2.4
	Brightness Mode				DynamicBlack 1
					DynamicBlack 2
					DynamicBlack 3
					Power = 100% / 95% / 90% / 85% / 80% / 75% / 70% / 65% / 60% / 55% / 50%
	PureEngine Ultra		PureContrast		Off / 1 / 2 / 3
			PureLight		Off / 1 / 2 / 3
			PureColor		Off / 1 / 2 / 3
			PureMotion		Off / 1 / 2 / 3
			PureDetail		Off / 1 / 2 / 3
	Color Settings	Color			-50 ~ 50
		Tint			-50 ~ 50
		BrilliantColor™			1 ~ 10

USING THE PROJECTOR

Main Menu	Sub Menu	Sub Menu 2	Sub Menu 3	Sub Menu 4	Values
Image	Color Settings	Color Temperature			Warm
					Standard
					Cool
					Cold
		11 Points RGB Balance			-50 ~ 50
		Color Gamut			Native
					DCI-P3
					Rec.709
		CMS	Color		White / Red / Green / Blue / Cyan / Magenta / Yellow
			Hue		-50 ~ 50
			Saturation		-50 ~ 50
			Luminance		-50 ~ 50
			Reset		No
					Yes
		RGB Gain/Bias	Red Gain		-50 ~ 50
			Green Gain		-50 ~ 50
			Blue Gain		-50 ~ 50
			Red Bias		-50 ~ 50
			Green Bias		-50 ~ 50
			Blue Bias		-50 ~ 50
			Reset		No
					Yes
		Color Space			Auto / RGB(0~255) / RGB(16~235)
	Wall Color				Off
					Blackboard
					Light Yellow
					Light Green
					Light Blue
					Pink
					Grey
	3D	3D Mode			Off
					On
		3D Sync Type			DLP-Link
					3D Sync
		3D Format			Auto
					Side by Side
					Top and Bottom
					Frame Sequential
					Frame Packing
		3D Sync Invert			Off
					On
		Reset			No
					Yes
	Reset				

USING THE PROJECTOR

Main Menu	Sub Menu	Sub Menu 2	Sub Menu 3	Sub Menu 4	Values
Display	Low Latency Mode				On
					ALLM
					Off
	Aspect Ratio				4:3
					16:9
					V-Stretch
					Full [Video]
					21:9
					32:9
					Native
					Auto
	Geometric Correction	V Keystone			-30 ~ 30
		H Keystone			-30 ~ 30
		Four Corner Adjustment			
		Warping			Off
					On
		Warping Adjustment			Press “Up”/ ”Down”/ ”Left”/ “Right” to focus the point and press “OK” to select the point. Then press “Up”/ ”Down”/”Left”/ “Right” to shift the selected point location. [Default: Top-Left].
		Grid Color			Green
					Magenta
					Red
					Cyan
		Reset			
	Edge Mask				0 ~ 10
	Digital Zoom	Zoom			-5 ~ 20
	Image Shift	H			-100 ~ 100
		V			-100 ~ 100
	Reset				
Setup	Test Pattern				Green Grid
					Magenta Grid
					White Grid
					White
					Off
	Projection Orientation				Front
					Rear
					Ceiling-Top
					Rear-Top
	Language				English
					Arabic
					Czecho
					Danish
					Dutch

Main Menu	Sub Menu	Sub Menu 2	Sub Menu 3	Sub Menu 4	Values
Setup	Language				Farsi
					Finnish
					French
					German
					Greek
					Hungarian
					Indonesian
					Italian
					Japanese
					Korean
					Norwegian
					Polish
					Portuguese
					Romania
					Russian
					Simplified Chinese
					Spanish
					Swedish
					Thai
					Traditional Chinese
					Turkish
					Vietnam
	Menu Settings	Menu Location			Top Left
					Top Right
					Center
					Bottom Left
					Bottom Right
		Menu Timer			Off
					5s
					10s
					20s
					30s
		Information Hide			Off
					On
	High Altitude				Off
					On
	Power Settings	Direct Power On			Off
					On
		Signal Power On			Off
					On
		Auto Power Off (min.)			0, 2 ~ 180 (1 min increments)
		Sleep Timer (min.)			0 ~ 990 (30 min increments)

USING THE PROJECTOR

Main Menu	Sub Menu	Sub Menu 2	Sub Menu 3	Sub Menu 4	Values
Setup	Power Settings	Power Mode (Standby)			Eco
					Communication
		12V Trigger A			Off
					On
		12V Trigger B			Off
					On
	Security	Security			Off
					On
		Security Timer	Month		
			Day		
			Hour		
		Change Password			
	Keypad Settings	Keypad Lock			Off
					On
	Background Color				None
					Blue
					Red
					Green
					Grey
	Device Reset	Reset OSD			No
					Yes
		Reset All Settings			No
					Yes
Input	Auto Source				Off
					On
	Rename Input Source	HDMI 1 / HDMI 2 / HDMI 3 / HOME			Default
					Custom
	Input Hide	HDMI 1 / HDMI 2 / HDMI 3 / HOME			No
					Yes
	HDMI CEC Settings	HDMI Link			Off
					On
		Power On Link			Mutual
					PJ → Device
					Device → PJ
		Power Off Link			Mutual
					PJ → Device
					Device → PJ
	Reset				No
					Yes

USING THE PROJECTOR

Main Menu	Sub Menu	Sub Menu 2	Sub Menu 3	Sub Menu 4	Values
Audio	Volume				0 ~ 10
	Mute				Off
					On
	Audio Mode				Auto
					Standard
					Movie
					Game
	Audio Output				Auto
					Internal Speaker
					Line Out (3.5mm)
	Audio Output Settings				Analog
					SPDIF
					eARC
	Reset				No
					Yes
Control	Device ID				0 ~ 99
	LAN	Network Status			(read only; Connected / Disconnected)
		MAC Address			(read only)
		DHCP			Off / On
		IP Address			192.168.0.100
		Subnet Mask			255.255.255.0
		Gateway			192.168.0.254
		DNS 1			192.168.0.51
		DNS 2			0.0.0.0
		Reset			
	Control	Crestron			Off
					On
		Extron			Off
					On
		PJ Link			Off
					On
		AMX Device Discovery			Off
					On
		Telnet			Off
					On
		HTTP			Off
					On
		Control 4			Off
					On
	Reset				No
					Yes

Main Menu	Sub Menu	Sub Menu 2	Sub Menu 3	Sub Menu 4	Values
Information	Regulatory				
	Serial Number				
	Source Info.				Source
					Resolution(00x00)
					Refresh Rate(0.00Hz)
	Picture Mode				
	Color Info.				Color Bit Depth
					Color Gamut
					Color Space
	Power Mode (Standby)				Communication/Eco
	Light Source Hours				
	Brightness Mode				
	Device ID				00 ~ 99
	IP Address				
	Network Status				
	Mac Address				
	Bluetooth Remote Status				
	FW Version	DDP			
		MCU			
		Scalar			

USING THE PROJECTOR

Image menu

Learn how to configure image settings.

Submenus

- Picture Mode
- Dynamic Range
- Brightness
- Contrast
- Sharpness
- Gamma
- Brightness Mode
- PureEngine
- Color Settings
- Wall Color
- 3D

Picture Mode

There are several predefined display modes that you can choose from to suit your viewing preference. Each mode has been fine-tuned by our expert colour team to ensure superior colour performance for wide range of content.

- **Vivid**: Selecting this mode balances colour saturation and brightness for a brighter display. Choose this mode for setups with ambient lighting, or where brighter images/presentations are necessary.
- **HDR / HLG**: Decodes and displays High Dynamic Range (HDR) / Hybrid Log Gamma (HLG) content for the deepest blacks, brightest whites, and vivid cinematic color using DCI-P3 color gamut. This mode will be automatically enabled if HDR/HLG is set to Auto (and HDR/HLG Content is sent to projector – 4K UHD Blu-ray, 1080p/4K UHD HDR/HLG Games, 4K UHD Streaming Video). While HDR/HLG mode is active, other display modes (Cinema, Reference, etc.) cannot be selected as HDR/HLG delivers color that is highly accurate, exceeding the color performance of the other display modes.
- **Cinema**: Provides the best balance of detail and colors for watching movies.
- **Game**: Optimises your projector for maximum contrast and vivid colours allowing you to see shadow detail when playing video games.
- **Reference**: This mode reproduces colours as close as possible the image the way the movie director intended. Color, color temperature, brightness, contrast and gamma settings are all configured to Rec.709 color gamut. Select this mode for the most accurate colour reproduction when watching movies.
- **WCG (Wide color gamut)**: Provides a wider range of colors. WCG is a non-HDR display mode and can only be used with SDR content. WCG along with Reference Picture Mode represent the most color accurate non-HDR Picture Modes (SDR).
- **Bright**: This mode is suitable for environments where extra-high brightness is required, such as using the projector in well-lit rooms.
- **Dolby Vision Bright**: Dolby Vision Decodes and Displays stunning HDR images by decoding dynamic metadata which allows excellent tone mapping on a per scene basis and superior Bit Depth and Contrast. Dolby Vision Bright features brighter visual brightness than Dolby Vision Dark, providing whiter whites and enhancing warm and skin tones.

- **Dolby Vision Dark**: Dolby Vision Decodes and Displays stunning HDR images by decoding dynamic metadata which allows excellent tone mapping on a per scene basis and superior Bit Depth and Contrast. Dolby Vision Dark focuses on darker visual brightness than Dolby Vision Bright, resulting in more robust contrast including deeper blacks.

  Note: *The Source Content (Streaming Video, 4K HDR Blu-ray and 4K Games) and Source Player (FireTV 4K Stick/Cube, Shield TV 4K, Xbox Series X, 4K HDR Blu-ray Player)* ***must*** *support Dolby Vision. PS5 does not support Dolby Vision.*

- **Dolby Vision Vivid**: Dolby Vision Decodes and Displays stunning HDR images by decoding dynamic metadata which allows excellent tone mapping on a per scene basis and superior Bit Depth and Contrast.Dolby Vision Vivid applies a more bright and more vivid optical algorithm, providing higher brightness and more vivid visual performance.
- **HDR10+**: Decodes and displays HDR10+ content by decoding dynamic metadata on a frame-by-frame basis, enhancing the details in bright and dark areas of HDR10+ content and delivering superior HDR over HDR10 visual experience.

  Note: *The Source Content (Streaming Video, 4K HDR Blu-ray and 4K Games) and Source Player (FireTV 4K Stick/Cube, Shield TV 4K, Xbox Series X, 4K HDR Blu-ray Player)* ***must*** *support HDR10+. PS5 does not support HDR10+.*

- **AI-PQ (AI-Picture Quality)**: Real-time face and scene recognition using the integrated AI processing units for the best visual experience. The AI-PQ optimizes the image quality on all screens simultaneously.
- **3D**: Optimized settings for watching 3D content.

  Note: *To experience the 3D effect, you will need to have compatible DLP Link 3D glasses. See 3D section for more information.*

- **ISF Day**: Optimize the image with the ISF Day mode to be perfectly calibrated and high picture quality.
- **ISF Night**: Optimize the image with the ISF Night mode to be perfectly calibrated and high picture quality.
- **ISF Day HDR**: Optimize the image with the ISF Day HDR mode to be perfectly calibrated and high picture quality.
- **ISF Night HDR**: Optimize the image with the ISF Night HDR mode to be perfectly calibrated and high picture quality.
- **ISF 3D**: Optimize the image with the ISF 3D mode to be perfectly calibrated and high picture quality.

Note: *When utilizing HDR, HDR10+, Dolby Vision and eARC, please use 4K120/8K30 HDMI 2.1 Cables (as these are high quality and low to no signal attenuation).*

Dynamic Range

HDR / HLG

Configure the High Dynamic Range (HDR) / Hybrid Log Gamma(HLG) setting and its effect when displaying video from 4K Blu-ray players and streaming devices.

- **Auto**: Auto detect HDR/HLG/HDR10+/Dolby Vision signal.
- **Off**: Turn off HDR/HLG/HDR10+/Dolby Vision Processing. When set to Off, the projector will NOT decode HDR/HLG/HDR10+/Dolby Vision content.

Brightness

Adjust the brightness of the image.

Contrast

The contrast controls the degree of difference between the lightest and darkest parts of the picture.

Sharpness

Adjust the sharpness of the image.

Gamma

Set up gamma curve type. After the initial setup and fine tuning is completed, utilize the Gamma Adjustment steps to optimize your image output.

- **Film**: For home theater.
- **Graphics**: For PC / Photo source.
- **1.8 / 2.0 / 2.2 / 2.4**: For specific PC / Photo source.

Brightness Mode

Adjust the brightness mode settings.

- **DynamicBlack1/ DynamicBlack2/ DynamicBlack3**: Use to automatically adjust the picture brightness in order to give optimum contrast performance.
- **Power**: Choose the power percentage for brightness mode.

PureEngine Ultra

Adjust the PureEngine parameters.

- **PureContrast**: Use to automatically optimize the brightness of the display during dark / light movie scenes to be shown in incredible detail.
- **PureLight**: Use to enhance the bright area brighter for SDR/ HDR. Select between Off, 1, 2, 3 for the varying levels on bright area.
- **PureColor**: Use to significantly increase the image's vividness.
- **PureMotion**: Use to preserve a natural motion of the displayed image.
- **PureDetail**: Use to significantly increase the image's sharpness.

Color Settings

Color

Adjust a video image from black and white to fully saturated color.

Tint

Adjust the color balance of red and green.

BrilliantColor™

This adjustable item utilizes a new color-processing algorithm and enhancements to enable higher brightness while providing true, more vibrant colors in picture.

Color Temperature

Select a color temperature from Warm, Standard, Cool, or Cold.

11 Points RGB Balance

Adjust the color balance of red, green and blue.

Color Gamut

Adjust the color gamut from Native, DCIP-3, and Rec.709.

CMS

Select the following options:

- **Color**: Adjust the red, green, blue, cyan, yellow, magenta, and white level of the image.
- **Hue**: Adjust the color balance of red and green.
- **Saturation**: Adjust a video image from black and white to fully saturated color.
- **Luminance**: Adjust the luminance of the selected color.
- **Reset**: Return the factory default settings for color adjustment.

RGB Gain/Bias

This setting allows to configure the brightness (gain) and contrast (bias) of an image.

- **Red / Green / Blue Gain:**: Adjust the color of the image's bright areas.
- **Red / Green / Blue Bias**: Adjust the color of the image's dark areas.
- **Reset**: Return the factory default settings for gray scale (white balance) adjustment.

Color Space

Select an appropriate color matrix type from the following: Auto, RGB(0-255), or RGB(16-235).

Wall Color

Designed to adjust the colors of the projected image when projecting on to a wall without a screen. Each mode has been fine-tuned by our expert colour team to ensure superior color performance.

There are several predefined modes that you can choose from to suit the colour of your wall. Select between off, blackboard, light yellow, light green, light blue, pink, and grey.

Note: *For accurate color reproduction, we recommend using a screen.*

USING THE PROJECTOR

3D

Note:

- *This projector is a full 3D projector with DLP-Link 3D solution.*
- *Please ensure that 3D glasses are in use for DLP-Link 3D content before enjoying your video.*
- *This projector supports frame sequential (page-flip) 3D via HDMI1/HDMI2/HDMI3 ports.*
- *To reach the best performance, resolution 1920x1080 is recommended, please note that 4K (3840x2160) resolution is not supported in 3D mode.*

3D Mode

Use this option to disable or enable the 3D function.

- **Off**: Select “Off” to turn off 3D mode.
- **On**: Select “On” to turn on 3D mode.

3D Sync Type

Use this option to select 3D technology.

- **DLP-Link**: Select to use optimized settings for DLP 3D Glasses.
- **3D Sync**: Select to use optimized settings for IR, RF or polarized 3D Glasses.

3D Format

Use this option to select the appropriate 3D format content.

- **Auto**: When a 3D identification signal is detected, the 3D format is selected automatically.
- **Side by Side**: Display 3D signal in “Side-by-Side” format.
- **Top and Bottom**: Display 3D signal in “Top and Bottom” format.
- **Frame Sequential**: Display 3D signal in “Frame Sequential” format.
- **Frame Packing**: Display 3D signal in “Frame Packing” format.

3D Sync Invert

Use this option to enable/disable the 3D sync invert function.

Reset

Return the factory default setting for 3D settings.

- **No**: Select to cancel Reset.
- **Yes**: Select to return the factory default settings for 3D.

Reset

Return the factory default settings for image settings.

USING THE PROJECTOR

Display menu

Learn how to configure the settings to properly project images according to your installation circumstances.

Submenus

- Low Latency Mode
- Aspect Ratio
- Geometric Correction
- Edge Mask
- Digital Zoom
- Image Shift

Low Latency Mode

Enable this feature to reduce response times (input latency) when gaming with PC, Xbox Series X|S, PS4, PS5, Switch, Steam Deck, Asus Ally X and more. All geometry settings (example: Keystone, Warping) will be disabled when Low Latency Mode is enabled. Geometry settings require processing and processing hurts “impact lag”.

Source Timing	Input Lag
1080p60	~20ms
1080p120	~12.5ms
1080p240	~8.5ms
4K60	~20ms

ALLM allows supported Game Consoles (Xbox Series X|S, PS5, and PC (with supported GPU – Graphics Processing Unit) to send a signal to the projector which will result in the projector automatically enabling low-latency, low-lag mode for gaming. To use ALLM, set ALLM setting under Display on the main menu in the OSD to “ALLM”. When ALLM is enabled, there is no need to turn low latency on and off.

Aspect Ratio

Select the aspect ratio of the displayed image between the following options:

- **4:3**: This format is for 4:3 input sources.
- **16:9**: This format is for 16:9 input sources, like HDTV and DVD enhanced for Wide screen TV.
- **V-Stretch**: This mode stretches a 2.35:1/2.4:1 image vertically removing the black bars.
- **Full [Video]**: Use this special 2.0:1 aspect ratio to display both 16:9 and 2.35:1 aspect ratio movies without black bars at the top and bottom of the screen.
- **21:9**: This format is for 21:9 input source, like HDTV and DVD enhanced for Wide screen TV.
- **32:9**: This format is for 32:9 input source, like HDTV and DVD enhanced for Wide screen TV.
- **Native**: This format displays the original image without any scaling.
- **Auto**: Automatically selects the appropriate display format.

Note:

- *Detailed informations about V-Stretch mode:*
  - *Some Letter-Box Format DVDs are not enhanced for 16x9 TVs. In this situation, the image will not look right when displaying image in 16:9 mode. In this situation, please try to use the 4:3 mode to view the DVD. If the content is not 4:3, there will be black bars around the image in 16:9 display. For this type of content, you can use V-Stretch mode to fill the image on the 16:9 display*
  - *If you use an external anamorphic lens, this V-Stretch mode also allows you to watch a 2.35:1 content (include Anamorphic DVD and HDTV film source) that supports anamorphic wide is enhanced for 16x9 Display in a wide 2.35:1 image. In this case, there are no black bars. Light source power and vertical resolution are fully utilized*

- *To use the Full Screen format, do the following:*
  - *a) Set the screen aspect ratio to 2.0:1.*
  - *b) Select "Full Screen" format.*
  - *c) Align the projector image correctly on the screen.*

4K UHD DMD scaling table:

16:9 screen	480i/p	576i/p	720p	1080i/p	2160p
4x3	Scale to 2880 x 2160				
16x9	Scale to 3840 x 2160				
21x9	Scale to 3840 x 1644				
32x9	Scale to 3840 x 1080				
V-Stretch	Get the central 3840 x 1620 image, and then scale to 3840 x 2160 for display				
Full screen	Scale to 5068 x 2852 (132% Enlarge), then get the central 3840x2160 image				
Auto	If the source is 4:3, auto resize to 2880 x 2160				

4K UHD DMD auto mapping rule:

Auto	Input resolution		Auto/Scale	
	H-resolution	V-resolution	3840	2160
4:3	800	600	2880	2160
	1024	768	2880	2160
	1280	1024	2880	2160
	1400	1050	2880	2160
	1600	1200	2880	2160
Wide Laptop	1280	720	3840	2160
	1280	768	3600	2160
	1280	800	3456	2160
SDTV	720	576	2700	2160
	720	480	3240	2160
HDTV	1280	720	3840	2160
	1920	1080	3840	2160

Geometric Correction

V Keystone

Adjust image distortion vertically and make a squarer image. Vertical keystone is used to correct a keystoned image shape in which the top and bottom are slanted to one of the sides. This is intended for use with vertically on-axis applications.

H Keystone

Adjust image distortion horizontally and make a squarer image. Horizontal keystone is used to correct a keystoned image shape in which the left and right borders of the image are unequal in length. This is intended for use with horizontally on-axis applications.

Four Corner Adjustment

This setting allows the projected image to be adjusted from each corner to make a square image when the projection surface is not level.

Warping

Enable or disable warping adjustment.

Warping Adjustment

Press ▲/▼/◀/▶ keys to focus the point and press the **Enter** key to select the point. Then press ▲/▼/◀/▶ to shift the selected point location.

Grid Color

Select a grid color for warp pattern between green, magenta, red, and cyan.

Reset

Return the factory default setting for geometric correction settings.

Edge Mask

Use this function to remove the video encoding noise on the edge of video source.

Digital Zoom

Use to reduce or magnify an image on the projection screen. Digital Zoom is not the same as optical zoom and can result in degradation of image quality.

Note: *Zoom settings are retained on power cycle of the projector.*

Image Shift

Adjust the projected image position horizontally (H) or vertically (V).

Reset

Return the factory default settings for display settings.

USING THE PROJECTOR

Setup menu

Learn how to set up the projector.

Submenus

- Test Pattern
- Projection Orientation
- Language
- Menu Settings
- High Altitude
- Power Settings
- Security
- Keypad Settings
- Background Color
- Device Reset

Test Pattern

Select the test pattern from green grid, magenta grid, white grid, white, or disable this function (off).

Projection Orientation

Select the preferred projection between front, rear, ceiling-top, and rear-top.

Language

Select the multilingual OSD menu.

Menu Settings

Menu Location

Select the menu location on the display screen.

Menu Timer

Set the duration where the OSD menu stays visible on the screen.

Information Hide

Enable this function to hide the information message.

High Altitude

When “On” is selected, the fans will spin faster. This feature is useful in high altitude areas where the air is thin.

Power Settings

Direct Power On

Choose “On” to activate Direct Power mode. The projector will automatically power on when AC power is supplied, without pressing the “Power” key on the projector keypad or on the remote control.

Signal Power On

Choose “On” to activate Signal Power mode. The projector will automatically power on when a signal is detected, without pressing the “Power” key on the projector Keypad or on the remote control.

Note:

- *If the “Signal Power On” option is turned “On”, the power consumption of the projector in standby mode will be over 3W.*
- *This function is applicable with HDMI source.*

Auto Power Off (min.)

Sets the countdown timer interval. The countdown timer will start, when there is no signal being sent to the projector. The projector will automatically power off when the countdown has finished (in minutes).

Sleep Timer (min.)

Sets the countdown timer interval. The countdown timer will start, with or without a signal being sent to the projector. The projector will automatically power off when the countdown has finished (in minutes).

Note: *The Sleep Timer is reset every time when the projector is powered off.*

Power Mode (Standby)

Set the power mode setting.

- **Eco:** Choose “Eco.” to save power dissipation further < 0.5W.
- **Communication:** More power consumption that allows controlling the projector over the network.

12V Trigger A / 12V Trigger B

Use this function to enable or disable the trigger.

Note: *3.5mm mini jack that outputs 12V 500mA (max.) for relay system control.*

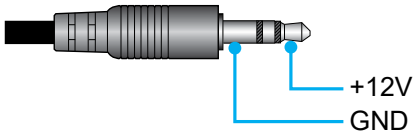

- **On**: Choose “On” to enable the trigger.
- **Off**: Choose “Off” to disable the trigger.

Security

Security

Enable this function to prompt for a password before using the projector.

- **On:** Choose “On” to use security verification when the turning on the projector.
- **Off:** Choose “Off” to be able to switch on the projector without password verification.

Note: *The default password is 1234.*

Security Timer

Select the time (Month/Day/Hour) function to set the number of hours the projector can be used. Once this time has elapsed you will be requested to enter your password again.

Change Password

Use to set or modify the password that is prompted when turning the projector on.

USING THE PROJECTOR

Keypad Settings

Keypad Lock

When the keypad lock function is “On”, the Keypad will be locked. However, the projector can be operated by the remote control. By selecting “Off”, you will be able to reuse the Keypad.

Background Color

Use this function to display a blue, red, green, grey color, or none when no signal is available.

Note: *If the background color is set to “None”, then the background color is black.*

Device Reset

Reset OSD

Return the factory default settings for OSD menu settings.

Reset All Settings

Return the factory default settings for all settings.

Input menu

Learn how to configure the projector input settings.

Submenus

- Auto Source
- Rename Input Source
- Input Hide
- HDMI CEC Settings

Auto Source

Choose this option to let the projector automatically find an available input source.

Rename Input Source

Use to rename the input function for easier identification. The available options include HDMI 1, HDMI 2, HDMI 3, and HOME.

Input Hide

Select the input options that you want to hide from the input source menu. The available options include HDMI 1, HDMI 2, HDMI 3, and HOME.

HDMI CEC Settings

Note: *When you connect HDMI CEC-compatible devices to the projector with HDMI cables, you can control them on the same power on or power off status using the HDMI Link control feature in the projector's OSD. This lets one device or multiple devices in a group power on or power off via HDMI Link Feature in a typical configuration, your DVD player may be connected to the projector through an amplifier or home theater system.*

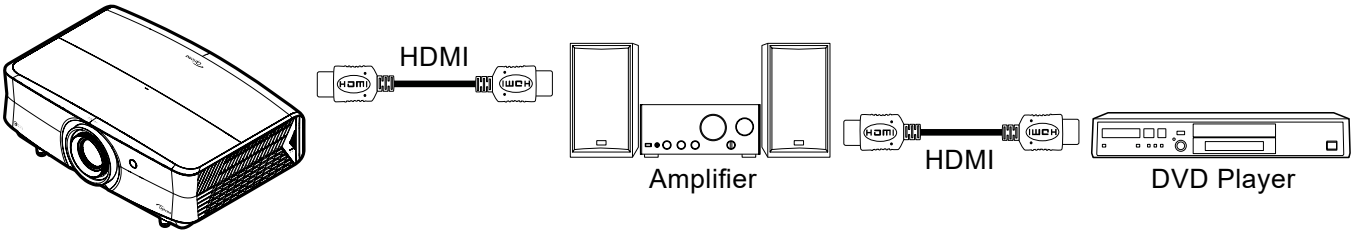

HDMI Link

Enable/disable the HDMI Link function.

Power On Link

CEC power on command.

- **Mutual:** Both projector and CEC device will be turned on simultaneously.
- **PJ → Device:** The CEC device will be turned on only after the projector is switched on.
- **Device → PJ:** The projector will be switched on only after the CEC device is turned on.

Power Off Link

CEC power off command.

- **Mutual:** Both projector and CEC device will be turned off simultaneously.
- **PJ → Device:** The CEC device will be turned off only after the projector is switched off.
- **Device → PJ:** The projector will be switched off only after the CEC device is turned off.

Reset

Return the factory default settings for input settings.

Audio menu

Learn how to configure audio settings.

Submenus

- Volume
- Mute
- Audio Mode
- Audio Output
- Audio Output Settings

Volume

Adjust the volume level.

Mute

Use this option to temporarily turn off the sound.

- **Off:** Choose “Off” to turn mute off.
- **On:** Choose “On” to turn mute on.

Note: *“Mute” function affects both internal and external speaker volume.*

Audio Mode

Select the appropriate audio mode between Auto, Standard, Movie, and Game.

Audio Output

Select the audio output between Auto, Internal Speaker, and Line Out (3.5mm).

Audio Output Settings

Select the audio output format between analog, SPDIF, and eARC.

Note: *eARC support Dolby ATMOS Pass Through to a Dolby ATMOS Soundbar or AVR with Dolby ATMOS Support.*

Reset

Return the factory default settings for audio settings.

USING THE PROJECTOR

Control menu

Control menu is used to configure the settings that allow the projector to communicate with other projectors or control devices.

Submenus

- Device ID
- LAN
- Control

Supplemental information

- Using the web control panel
- Using RS232 command by Telnet

Device ID

ID definition can be set up by menu (range 0-99), and allow user control an individual projector by using RS232 command.

Note: *For a full list of RS232 commands, please refer to the RS232 user manual on our website.*

LAN

Configure the projector's network settings.

Network Status

Display the network connection status. (Read only)

MAC Address

Display the MAC address. (Read only)

DHCP

Turn on DHCP to automatically acquire IP address, subnet mask, gateway, DNS 1, and DNS 2.

IP Address

Assign the projector's IP address.

Subnet Mask

Assign the projector's subnet mask.

Gateway

Assign the projector's gateway.

DNS 1 / DNS 2

Assign the projector's DNS.

Reset

Reset the network settings to default factory values.

USING THE PROJECTOR

Control

This projector can be controlled remotely by a computer or other external devices through the wired network connection. It allows the user to control one or more projectors from a remote control center, such as powering the projector on or off, and adjusting the image brightness or contrast.

Use the Control submenu to select a control device for the projector.

Crestron

Control the projector with Crestron controller and related software.

For more information, please visit http://www.crestron.com.

Extron

Control the projector with Extron devices.

For more information, please visit http://www.extron.com.

PJ Link

Control the projector with PJLink v2.0 commands.

For more information, please visit http://pjlink.jbmia.or.jp/english.

AMX Device Discovery

Control the projector with AMX devices.

For more information, please visit http://www.amx.com.

Telnet

Control the projector using RS232 commands though Telnet connection.

For more information, refer to “RS232 by Telnet Function” on page 62.

HTTP

Control the projector with web browser. (Port: 8088)

For more information, refer to “How to use web browser to control your projector” on page 52.

Control 4

Control the projector with Control 4 controller and related software.(Port: 53595)

Control Port

Control	Crestron	Port 41794
	Extron	Port 2023
	PJ Link	Port 4352
	AMX Device Discovery	Port 9131
	Telnet	Port 23
	HTTP	Port 8088
	Control 4	Port 53595

Note:

- *Crestron is a registered trademark of Crestron Electronics, Inc. of the United States.*
- *Extron is a registered trademark of Extron Electronics, Inc. of the United States.*
- *AMX is a registered trademark of AMX LLC of the United States.*
- *PJLink applied for trademark and logo registration in Japan, the United States of America, and other countries by JBMIA.*
- *For more information about the various types of external devices which can be connected to the LAN / RJ45 port and remotely control the projector, as well as the supported commands for these external devices, please contact the Support-Service directly.*

USING THE PROJECTOR

Setup Network Control

LAN RJ45 function

For simplicity and ease of operation, the projector provides diverse networking and remote management features. The LAN / RJ45 function of the projector through a network, such as remotely manage: Power On / Off, brightness, and contrast settings. Also, you can view the projector status information, such as: Video- Source, Sound-Mute, etc.

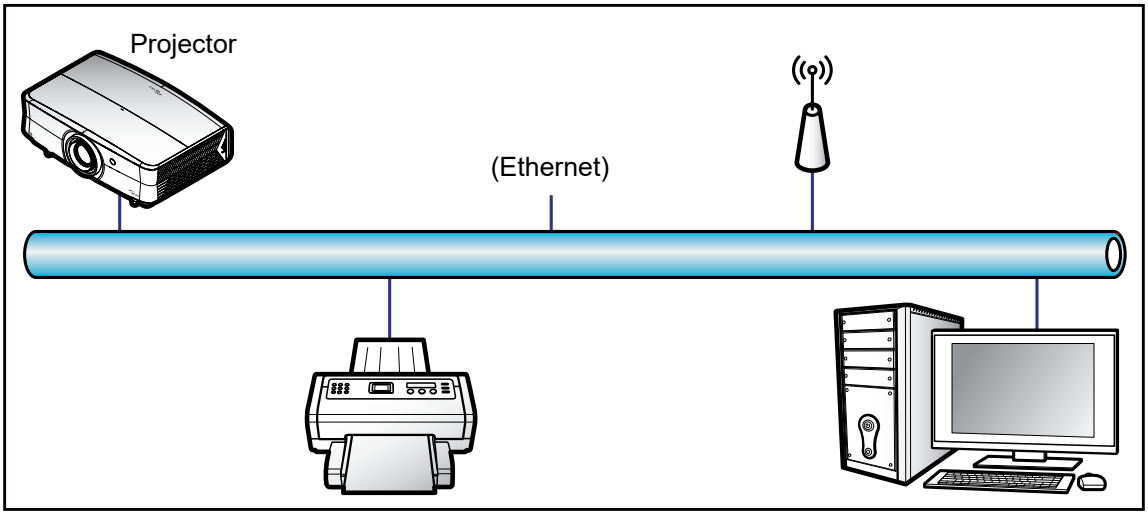

Wired LAN terminal functionalities

This projector can be controlled by using a PC (laptop) or other external device via LAN / RJ45 port and compatible with Crestron / Extron / AMX (Device -Discovery) / PJLink.

- Crestron is a registered trademark of Crestron Electronics, Inc. of the United States.
- Extron is a registered trademark of Extron Electronics, Inc. of the United States.
- AMX is a registered trademark of AMX LLC of the United States.
- PJLink applied for trademark and logo registration in Japan, the United States of America, and other countries by JBMIA.

The projector is supported by the specified commands of the Crestron Electronics controller and related software, for example RoomView®.

http://www.crestron.com/

This projector is compliant to support Extron device(s) for reference.

http://www.extron.com/

This projector is supported by AMX (Device Discovery).

http://www.amx.com/

This projector supports all commands of PJLink Class 2.

http://pjlink.jbmia.or.jp/english/

For more detailed information about the various types of external devices which can be connected to the LAN / RJ45 port and remote control the projector, as well as the supported commands for these external devices, please contact the Support-Service directly.

USING THE PROJECTOR

How to use web browser to control your projector

1. Turn “On” the DHCP option on projector to allow a DHCP server to automatically assign an IP address.
2. Open the web browser in your PC and type in the projector’s IP address (“Control > LAN > IP Address”).
3. Enter the user name and password, and click “Login”.
   The projector’s configuration web interface opens.

Note:

- *The default user name is “admin”.*
- *The steps in this section is based on Windows 10 operating system.*

Making a direct connection from your computer to the projector*

1. Turn “Off” the DHCP option on the projector.
2. Configure the IP address, Subnet Mask, Gateway, and DNS on projector (“Control > LAN”).
3. Open ***Network & Internet*** page on your PC, and assign the identical network parameters to your PC as set on projector. Click “OK” to save the parameters.

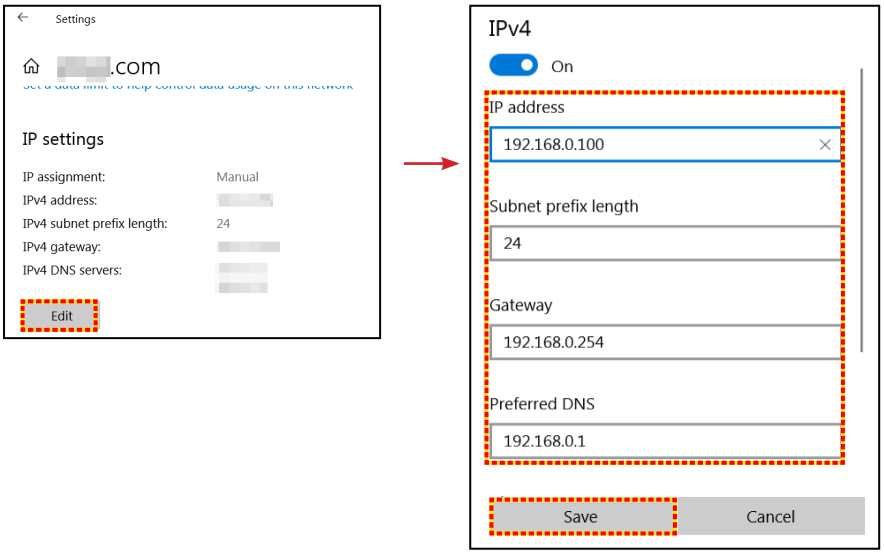

4. Open the web browser on your PC and type in to the URL field the IP address and port, assigned in step 3. Then press “Enter” key.
   Note: *Port table, refer to page 51.*

USING THE PROJECTOR

LAN RJ45

1. Connect an RJ45 cable to RJ45 ports on the projector and the PC (laptop).

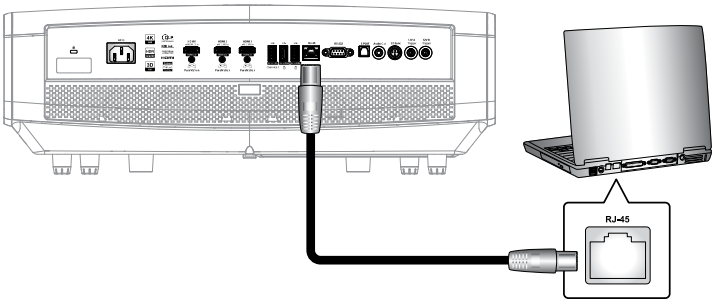

2. On the PC (Laptop), select **Start** > **Settings** > **Network & Internet**.

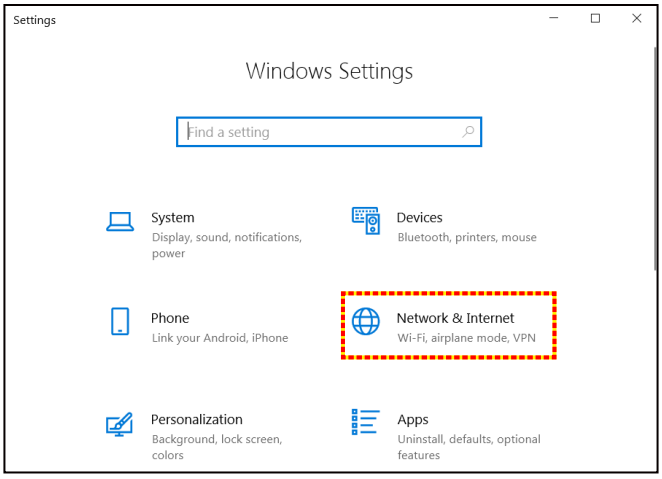

3. In the **Ethernet** section, select **Properties**.

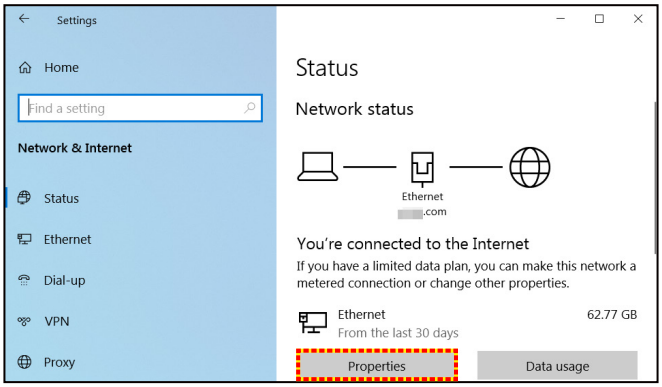

4. In the **IP settings** section, select **Edit**.

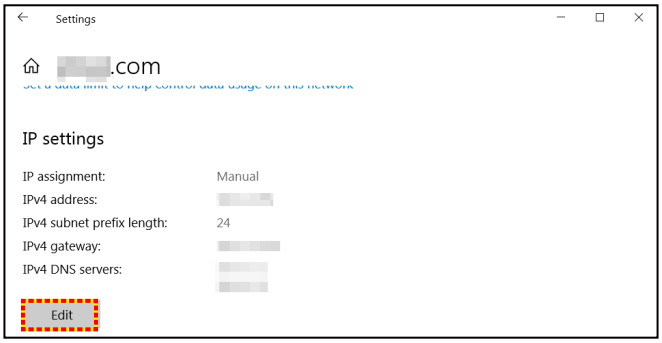

5. Type in the IP address and Gateway, then select “Save”.

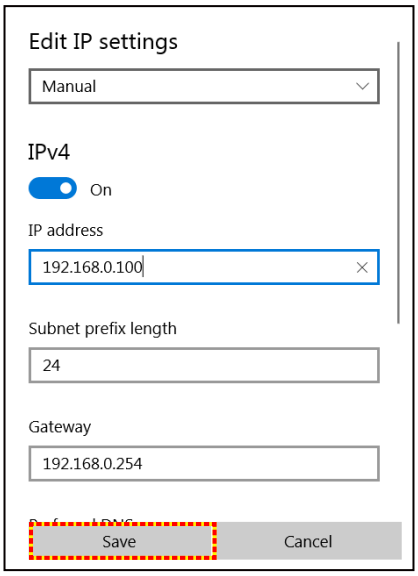

6. Press the “Menu” button on the projector.
7. Open on projector **Control** > **LAN**.
8. Enter the following connection parameters:
   – DHCP: Off
   – IP Address: 192.168.0.100
   – Subnet Mask: 255.255.255.0
   – Gateway: 192.168.0.254
   – DNS: 192.168.0.51
9. Press “Enter” to confirm settings.
10. Open a web browser, for example Microsoft Edge or Chrome with Adobe Flash Player 9.0 or higher installed.
11. In the Address bar, input the projector’s IP address and port: 192.168.0.100:8088.

12. Press “Enter”.

The projector is setup for remote management. The LAN / RJ45 function displays as follows:

Log in

When you open the web page for the first time, you will see a screen like the one below.
Please change the default password.

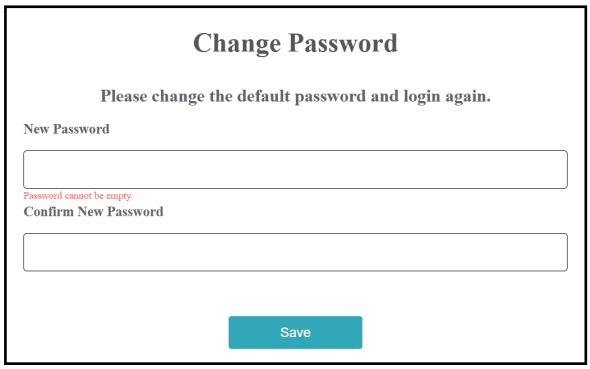

After you have changed the default password, you have to log in again. When you open the web page, enter the new password in the “Password” field and click **Login**.

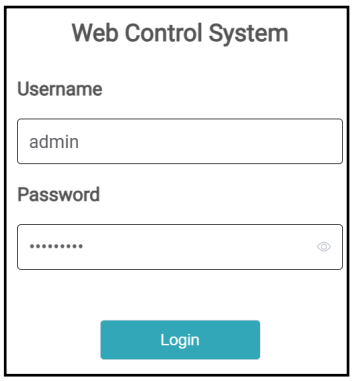

Administrator

The projector name set here is also used in PJLink control.Only alphanumeric characters can be used as projector name. The maximum number of characters is 32.

You can use only alphanumeric characters in the password. The minimum number of characters is 8. If you enter an invalid character, “Invalid Character” warning is displayed.

If the characters of new password and the characters of confirm (new) password do not match, error message will be displayed. In this case, re-enter the password.

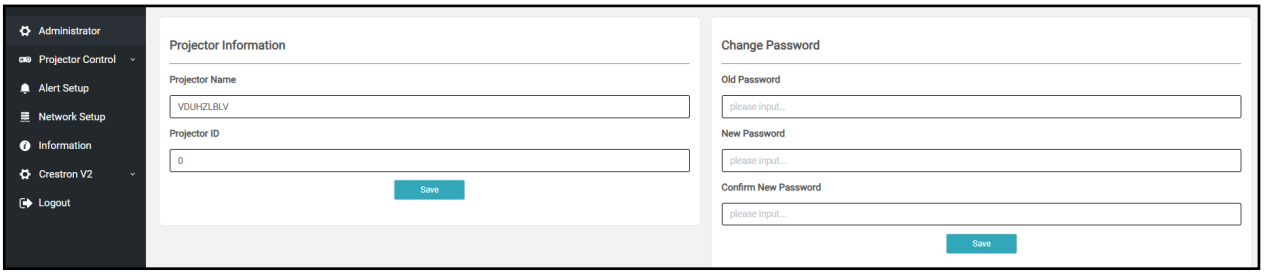

Projector Control

You can control the projector with this item. The items for control are described in this section.

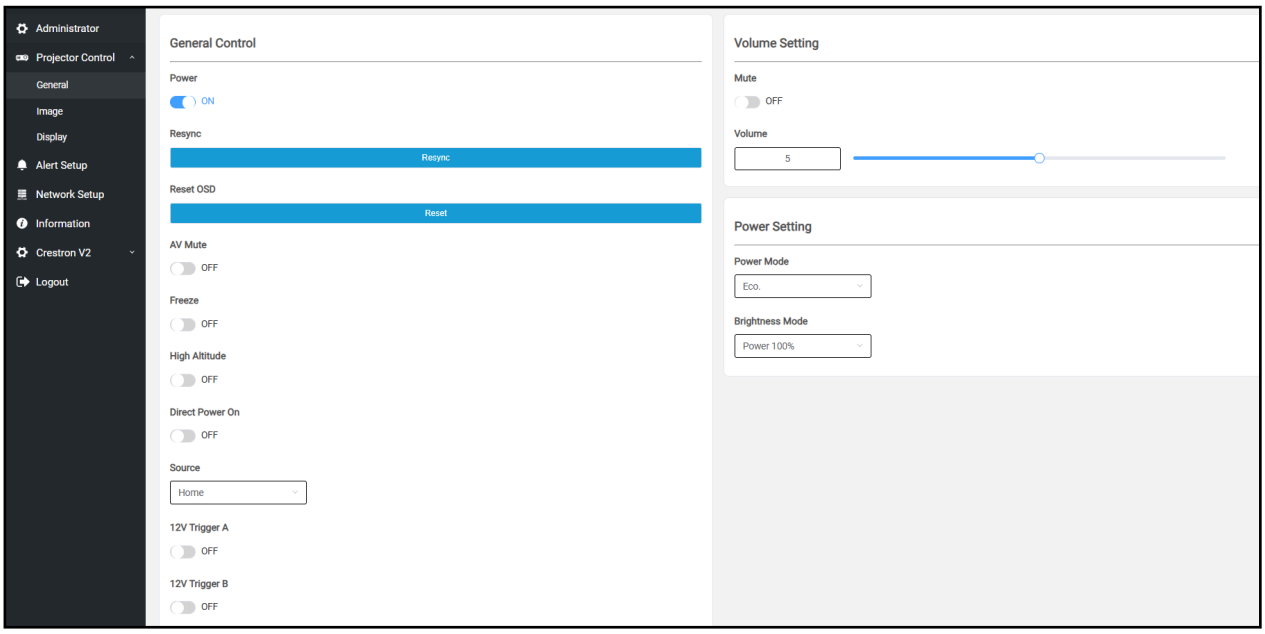

[General]

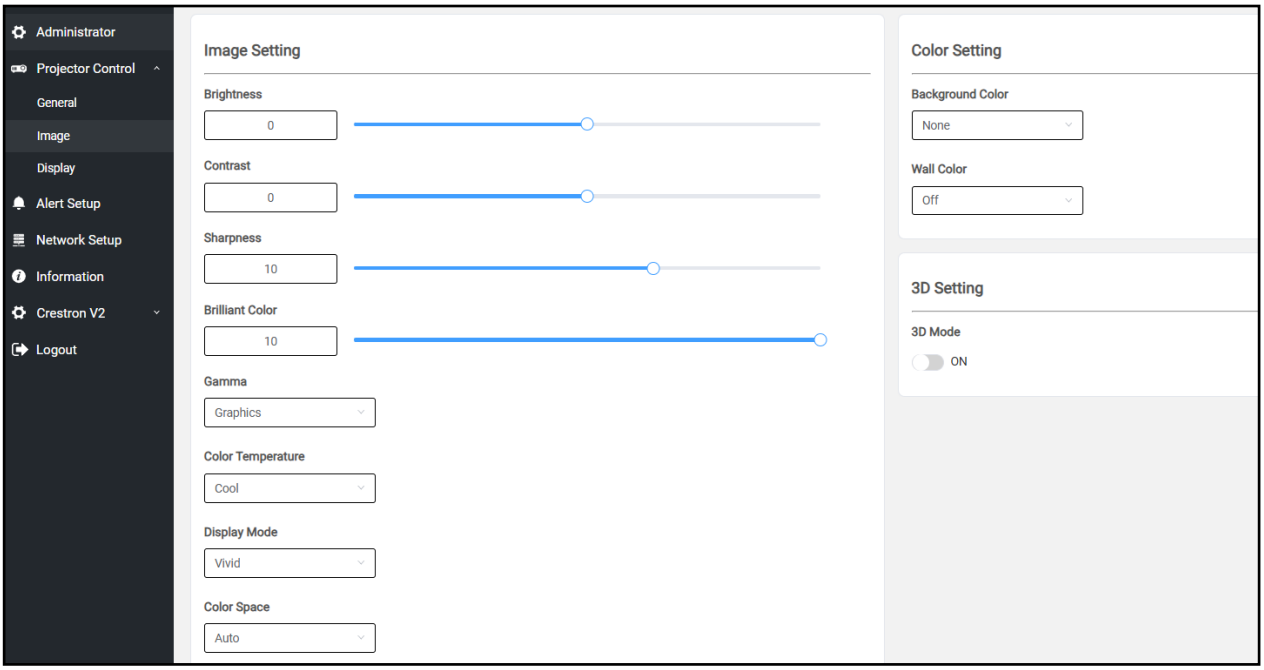

[Image]

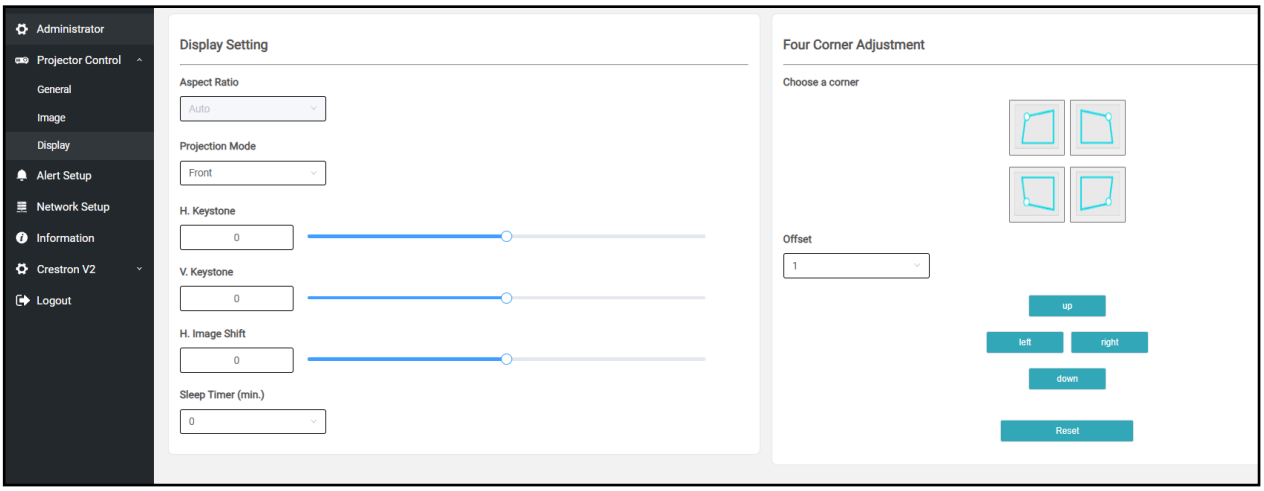

[Display]

Alert Setup

You can send email alerts when an error occurs. You can carry out settings for alert mail in this section.

1. Alert types: Check the type of error for which you want to send alert mail.
2. Alert mail notification: Check and perform the following settings:
   - SMTP Setting: Set the following:
     a) SMTP Server: Server address (server name) (SMTP server)
     b) Port: SMPT secure port. Ex. 25, 465, 587, 2525
     c) User Name: User name of the mail server
     d) Password: Mail server password
     e) From: email address of the sender
   - Email Setting: Set the following:
     a) Mail Subject
     b) Mail Content
     c) To: Enter the e-mail address of the sender.
3. Click “Save” to fix the value.
4. Send Test Mail.

   When you click [Send Test Mail], test email will be sent. The text will be “Email Test xxx.xxx.xxx.xxx *”.

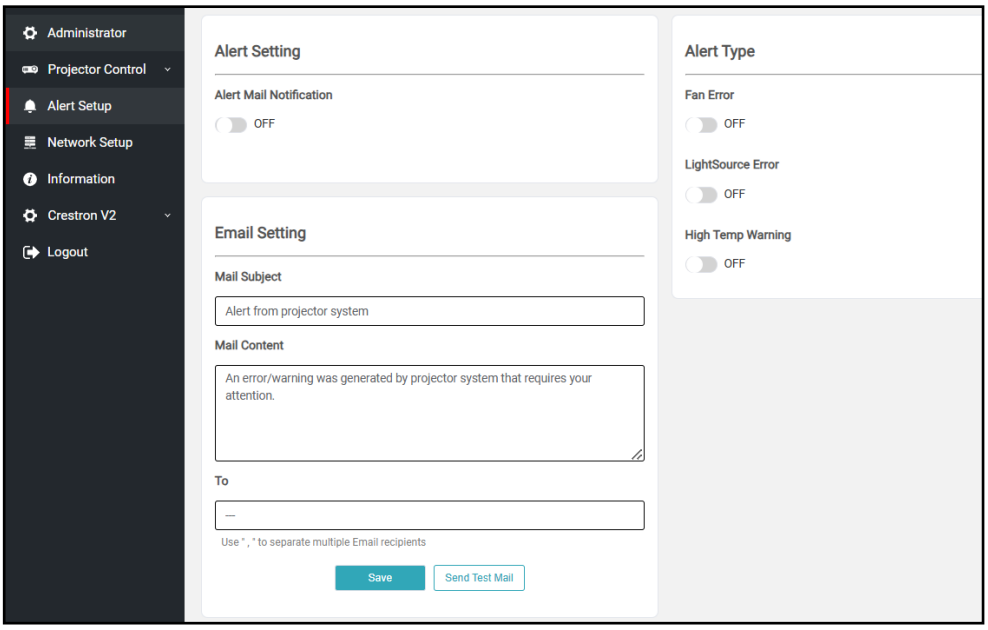

Network Setup

Set the network of the projector.

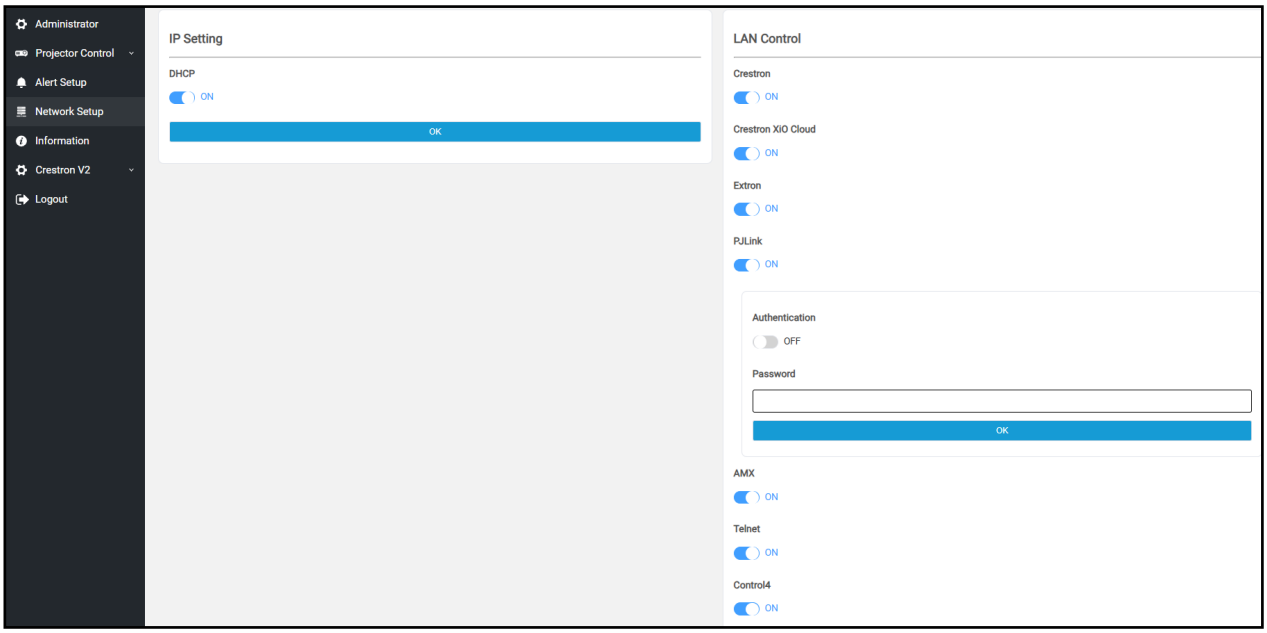

Information

The current status of the projector is displayed. You can check projector model name, firmware version, web control version, and current network configurations.

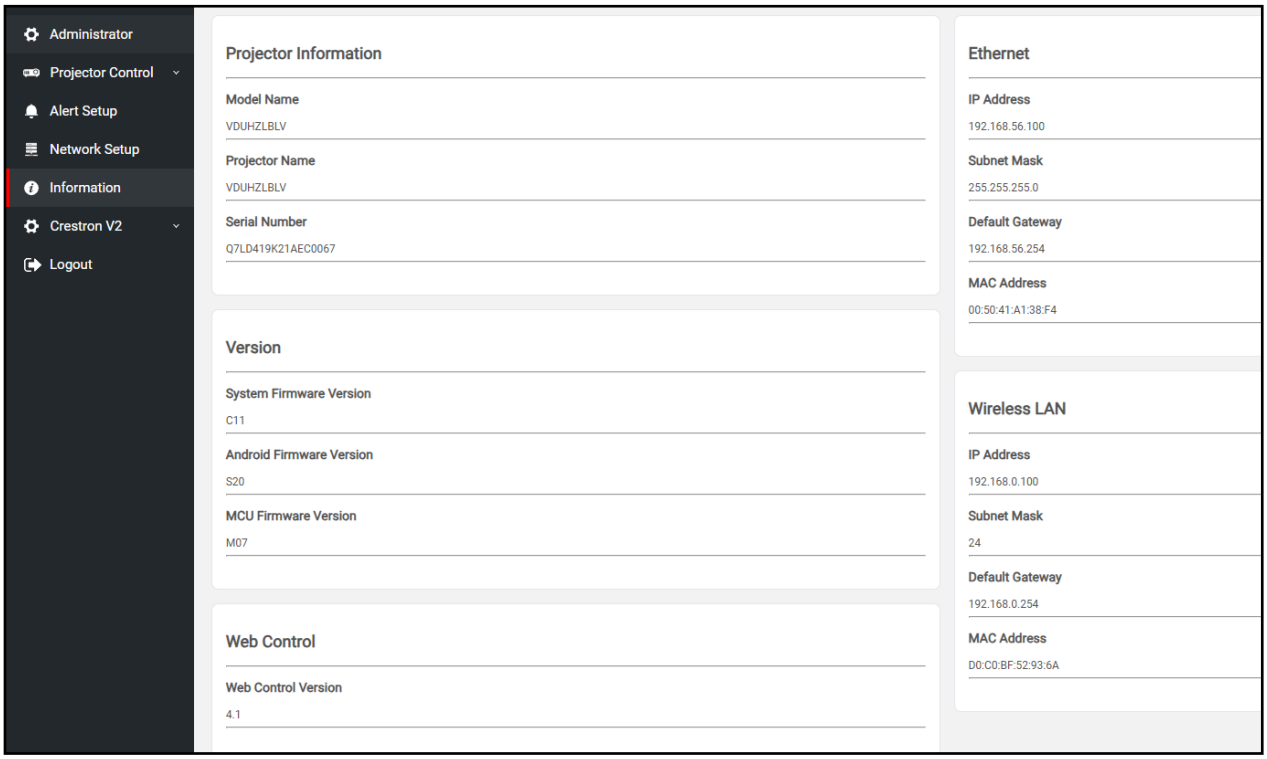

Crestron V2

View the connection status and configure Crestron related settings.

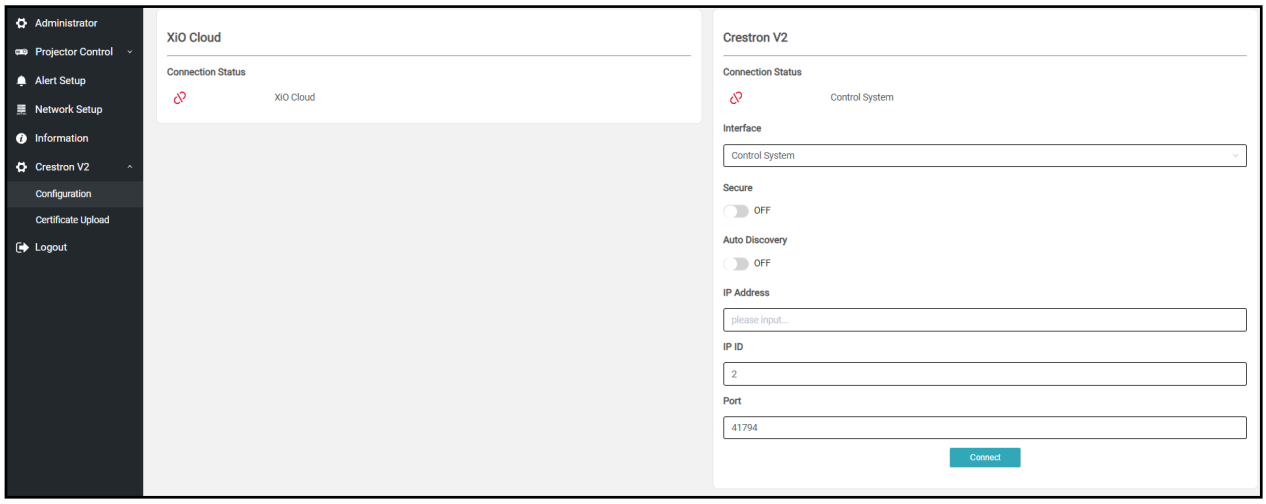

[Configuration]

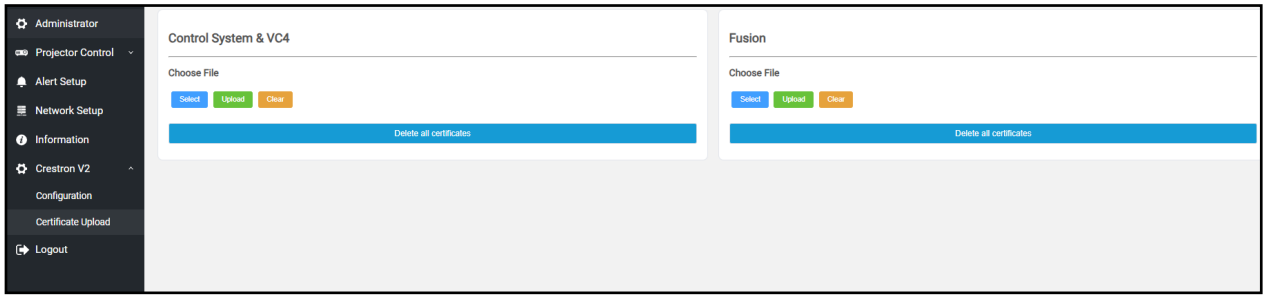

[Certificate Upload]

USING THE PROJECTOR

RS232 by Telnet Function

As an alternative method of control, this projector has RS232 command control by TELNET for LAN / RJ45 interface.

Quick Start-Guide for "RS232 by Telnet"

- Check and get the IP address on OSD of the projector.
- Make sure that the PC / laptop can access the web-page of the projector.
- Make sure that "Windows Firewall" setting is set to disabled in case of "TELNET" function filtering out by PC / laptop.

1. Click on **Search** and then enter "cmd" as a search word. Press the "Enter" key.

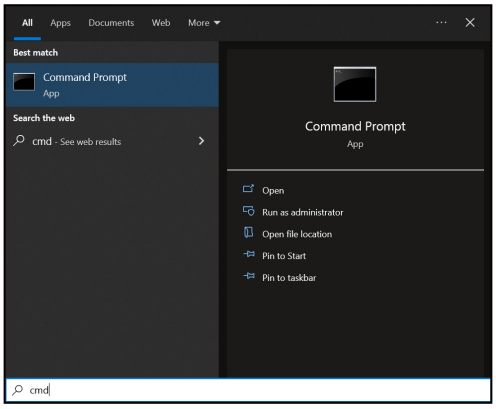

2. Open the Command Prompt app.
3. Input the command format as follows:
   – telnet ttt.xxx.yyy.zzz 23 ("Enter" key pressed)
   – (ttt.xxx.yyy.zzz: IP-Address of the projector)
4. If Telnet-Connection ready, and user can have RS232 command input, then press the "Enter" key and Telnet connection should be ready for RS232 command control.

Specification for "RS232 by TELNET":

1. Telnet: TCP.
2. Telnet port: 23 (for further details, please contact the Optoma service team).
3. Telnet utility: Windows "TELNET.exe" (console mode).
4. To end the Telnet session, just close the Command Prompt app window.
5. Windows Telnet utility directly after TELNET connection ready.
   – Limitation 1 for Telnet-Control: There cannot be more than 50 bytes for successive network payload for Telnet-Control application.
   – Limitation 2 for Telnet-Control: There cannot be more than 26 bytes for successive RS232 command for Telnet-Control.
   – Limitation 3 for Telnet-Control: Minimum delay for next command must be more than 200 (ms).

Reset

Return the factory default settings for control settings.

USING THE PROJECTOR

Information menu

View the projector information about its status and settings. The projector information is read only.

- Regulatory
- Serial Number
- Source Info.
- Picture Mode
- Color Info.
- Power Mode (Standby)
- Light Source Hours
- Brightness Mode
- Device ID
- IP Address
- Network Status
- Mac Address
- Bluetooth Remote Status
- FW Version

System settings

On the Launcher screen, select the **Settings** menu ( ) to configure various system settings.

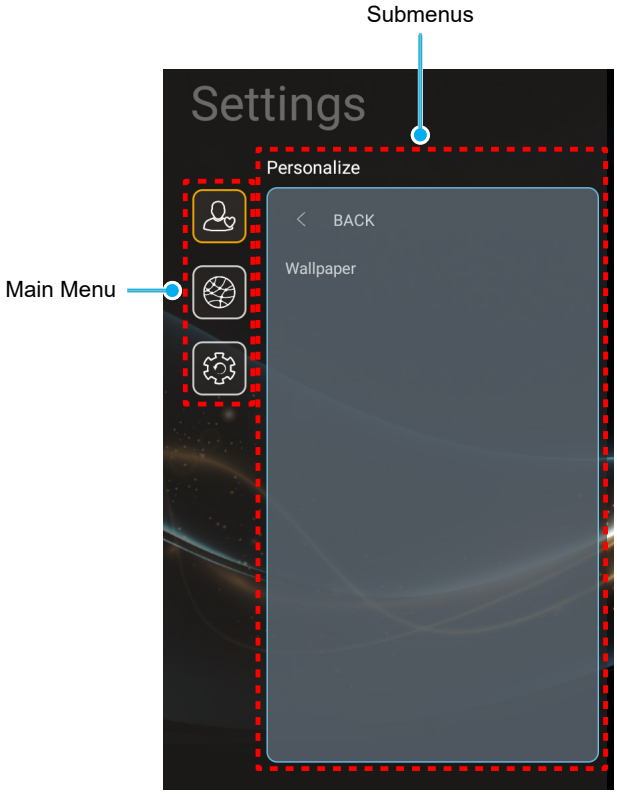

Settings menu tree

Level 1	Level 2	Level 3	Level 4	Value
Personalize	Wallpaper	Optoma style…		
Network	Wireless	Wi-Fi		Off
				On [Default]
		Available Networks SSID (When WiFi On)	Enter password for [Wi-Fi name] (When entering password)	[Pop up dialog] - Title: Enter password for [Wi-Fi name] - Subtitle: Password - Input: (Input text) - Checkbox: Show password - Button: “**Cancel**”/ “**OK**”
			Internet Connection	
			IP Address	
			MAC Address	
			SubNet Mask	
			Gateway	
			DNS1	
			DNS2	
			Signal Strength	

Level 1	Level 2	Level 3	Level 4	Value	
Network	Wireless	Available Networks SSID (When WiFi On)	Proxy Settings	None	
				Manual [Pop up dialog] Title: Enter a valid hostname. Subtitle: Proxy hostname Input hint: proxy.example@com Button: “**Cancel**”/ “**OK**”	
			IP Settings	DHCP	
				Static [Pop up dialog] Title: Enter a valid IP address. Subtitle: IP address Input hint: 192.168.1.128 Button: “**Cancel**”/ “**OK**”	
			Cancel		
			Forget	[Pop up dialog] Hint: [Wi-Fi name] Title: Forget network Content: Your device will no longer join this Wi-Fi network. Button: “**Cancel**”/ “**OK**”	
		Other Options	Add New Network	[Pop up dialog] Title: Enter the name for Wi-Fi network Input: (Input text) Button: “**Cancel**”/ “**OK**”	
				[Pop up dialog] Content: Type of security Button: None, WEP, WPA/WPA2 PSK, 802.1xEAP	
			Portable Hotspot	Portable Wi-Fi Hotspot	On
					Off
				Network name	[Pop up dialog] Title: Rename network Input: (Input text) Button: “**Cancel**”/”**OK**”
				Security	[Pop up dialog] Title: Type of security Button: None, WPA2 PSK
				Password	[Pop up dialog] Title: Change password Input: (Input text) Description: The password must have at least 8 characters. Checkbox: Show password Button: “**Cancel**”/”**OK**”

Level 1	Level 2	Level 3	Level 4	Value
System	Display Share			
	File Manager			
	Keyboard	Current keyboard		
		Manage keyboards	Other Keyboard	On
				Off [Default]
			Kika Keyboard	On [Default]
				Off
	Date and Time	Select time zone		-12:00, -11:00, -10:00, -09:30, -09:00, -08:00, -07:00, -06:00, -05:00, -04:00, -03:30, -03:00, -02:00, -01:00, 00:00, +01:00, +02:00, +03:00, +03:30, +04:00, +04:30, +05:00, +05:30, +05:45, +06:00, +06:30, +07:00, +08:00, +08:30, +8:45, +09:00, +09:30, +10:00, +10:30, +11:00, +12:00, +12:45, +13:00, +14:00
		Daylight Saving Time		On
				Off [Default]
		Use 24-hour format		On
				Off [Default]
	System Update			
	Legal	Terms and Conditions of Use		
		Privacy Policy		
		Cookies Policy		
		Open Source License		

Note:

- *Functions vary depending on model definition.*
- *All specifications are subject to change without notice.*

USING THE PROJECTOR

Personalize menu

Wallpaper

Set the wallpaper for the Home screen.

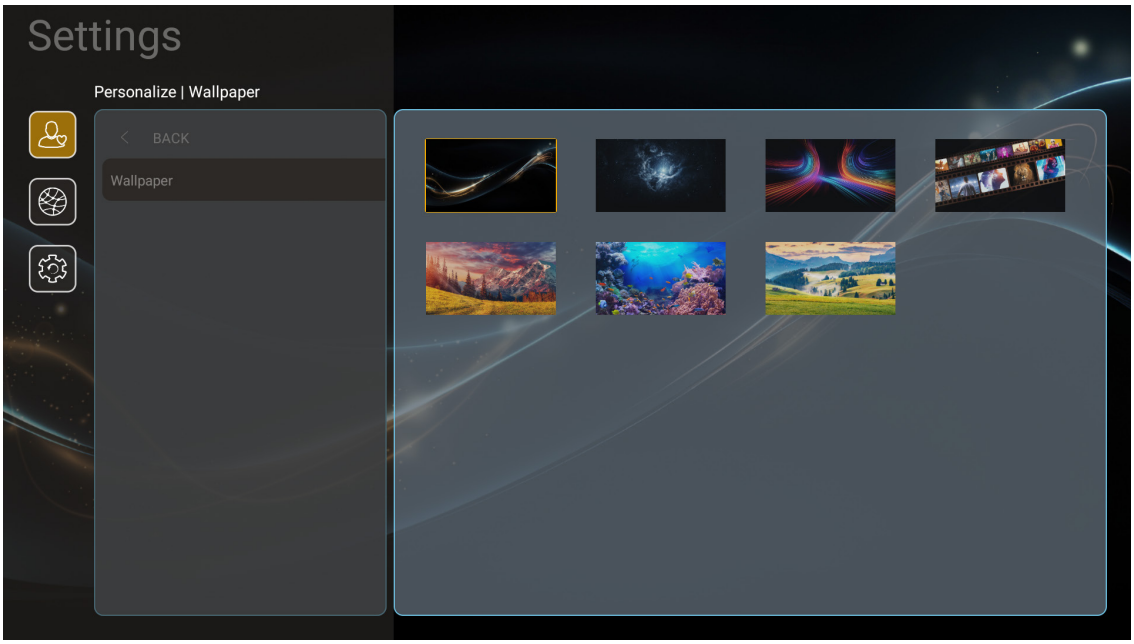

Network menu

Wireless

Configure wireless network settings.

- **Wi-Fi:** Set the Wi-Fi option to “On” to enable wireless network feature.
- **Available Network SSID:** Select your desired wireless access point and enter or configure the necessary connection parameters (if required), for example password, proxy settings, and IP address. For information, you can review the signal strength.

  Choose “Cancel” to return to the Network menu without saving settings. Choose “Forget” to delete the wireless network profile.

  Note: *Whenever you need to input symbols, the system will automatically pop-up an onscreen keyboard.*
- **Other Options:** Configure advanced wireless network settings, such as “Add New Network” (manually enter network name), and “Portable Hotspot” (configure the projector to behave as a wireless access point for other devices).

USING THE PROJECTOR

System menu

Display Share

Launch ***Display Share*** app. See page *71*.

File Manager

Launch ***File Manager*** app. See page *72*.

Keyboard

Select and manage the keyboard.

Date and Time

Configure date and time settings.

- **Select time zone:** Select the time zone in your location.
- **Daylight Saving Time:** Set to “On” if daylight saving time is observed in your region.
- **Use 24-hour format:** Set to “On” to display time in 24-hour format. Set to “Off” to display time in 12-hour format (AM/PM).

System Update

System will look for updates automatically every time the projector is connected to the Internet (OTA).

Legal

Review legal documents including “Terms and Conditions of Use”, “Privacy Policy”, “Cookies Policy”, and “Open Source License”.

Note: *You can review legal documents online as well. Please refer to the following web addresses:*

- *Terms and Conditions of Use: https://www.optoma.com/terms-conditions/.*
- *Cookies Policy: https://www.optoma.com/cookies-policy/.*
- *Privacy Policy: https://www.optoma.com/software-privacy-policy/.*

USING THE PROJECTOR

Selecting an input source manually

If the Auto Source function is off and the desired input source is not visible on the Home screen, select **Input Source** ( ) on the Home screen or press the button on the remote control and then select your preferred input source.

Selecting an app

To view all installed apps, select the **Settings** menu ( ). Then select your desired app (**Display Share** or **File Manager**).

Display Share

To get the App, you can do either of the following:

- if you are using the mobile device, scan the QR code on the screen.
- if you are using the computer, simply go to the link.

Then install the Display Share app in your computer or mobile device.

Before you get started, make sure to connect your computer or mobile device to the same Wi-Fi as the projector. Then follow the on-screen instructions to operate the App.

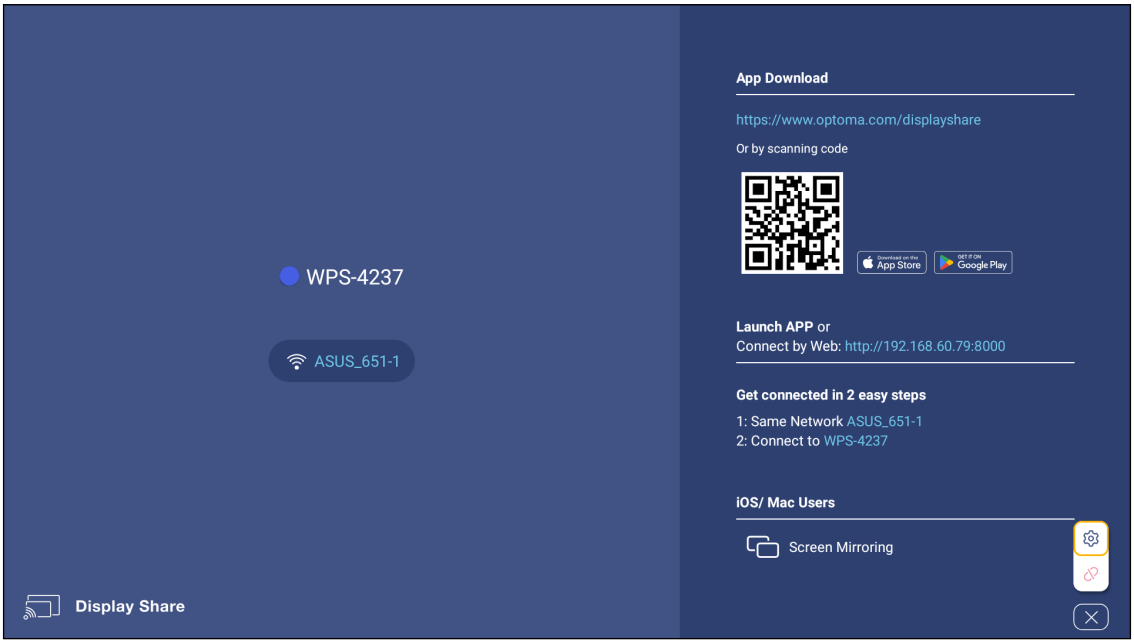

Note: *For initial activation of the iOS screen mirroring function, please ensure the projector is connected to the internet, then launch the Display Share app. You are only required to perform this initial step once and after the initial connection is established, the Display Share app does not need to be open for future use of the iOS screen mirroring function.*

File Manager

With the File Manager app, you can manage the files stored in the internal storage, external storage, and cloud storage.

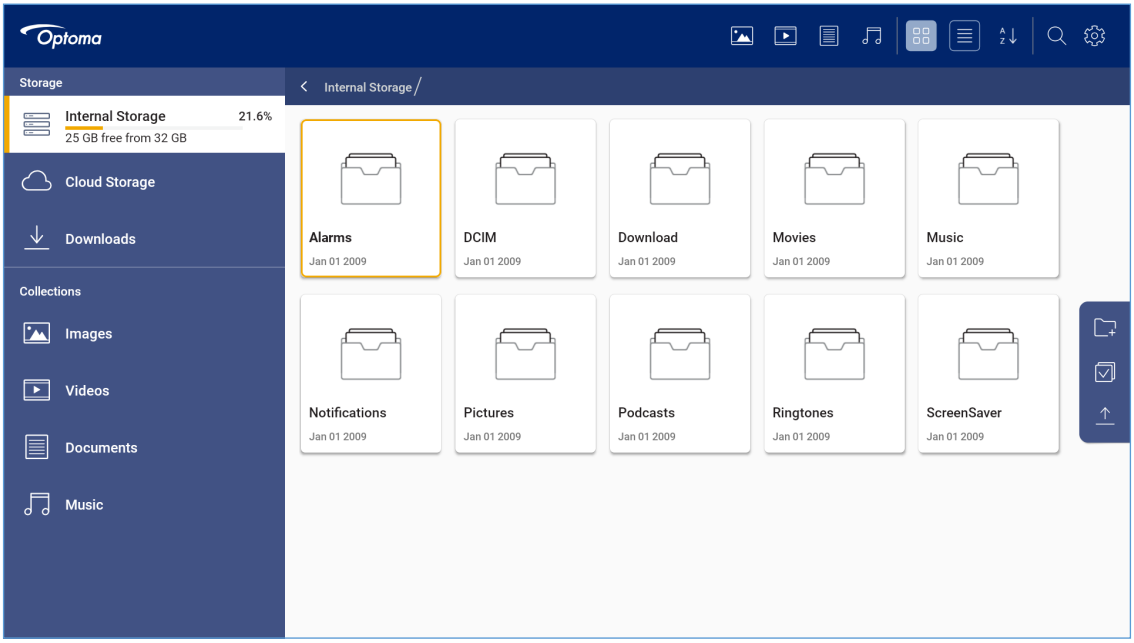

ADDITIONAL INFORMATION

Compatible resolutions

Input Signal for HDMI

Signal	Resolution	Refresh Rate(Hz)	Notes for Mac
VGA	640x480	60/67/72/75	Mac 60/75
	720x400	70	
SVGA	800x600	56/60/72/75	Mac 60/75
	832x624	75	Mac 75
XGA	1024x768	60/70/75/120	Mac 60/70/75
SDTV(480P)	720x480	60	
SDTV(576P)	720x576	50	
HDTV(720P)	1280x720	60/120	Mac 60
WXGA	1280x800	60	Mac 60
	1440x900	60	
WXGA	1366x768	60	
SXGA	1280x1024	60/75	Mac 60/75
	1440x900	60	
SXGA+	1400x1050	60	
UXGA	1600x1200	60	
HDTV(1080I)	1920x1080	60	
HDTV(1080p)	1920x1080	24/50/60/120/240	Mac 60
WQHD	2560x1440	120	
UHD(2160p)	3840x2160	24/30/50/60/120	
	4096x2160	24/50/60/120	

3D Support Timing

HDMI1.4a 3D Timing For Blue-Ray 3D

Signal	Timing
720p (Frame Packing)	1280x720@50Hz
720p (Frame Packing)	1280x720@60Hz
1080p (Frame Packing)	1920x1080@23.98/24Hz
720p (Top and Bottom)	1280x720@50Hz
720p (Top and Bottom)	1280x720@60Hz
1080p (Top and Bottom)	1920x1080@23.98/24Hz
1080i(Side by Side(Half))	1920x1080@50(25)Hz
1080i(Side by Side(Half))	1920x1080@60(30)Hz

PC 3D timing

Signal	Timing
Frame Sequential	1920x1080@120Hz
	1280x720@120Hz
	1024x768@120Hz

ADDITIONAL INFORMATION

EDID (Digital)

B0/Established Timing			B0/Standard Timing			B0/Detail Timing	
Resolution	V [Hz]	H [KHz]	Resolution	V [Hz]	Ratio	Resolution	V [Hz]
720x400	70.0	31.5	1024x768	120.0	4:03	3840x2160	60.0
640x480	60.0	31.5	1280x720	60.0	16:09		
640x480	66.6(67)	34.9	1280x720	120.0	16:09		
640x480	72.0	37.9	1280x800	60.0	16:10		
640x480	75.0	37.5	1280x1024	60.0	5:04		
800x600	56.0	35.1	1440x900	60.0	16:10		
800x600	60.0	37.9	1400x1050	60.0	4:03		
800x600	72.0	48.1	1600x1200	60.0	4:03		
800x600	75.0	46.9					
832x624	75.0	48.9					
1024x768	60.0	48.4					
1024x768	70.0	56.5					
1024x768	75.0	60.0					
1280x1024	75.0	80.0					
1152x870	75.0	67.5					

B1/Video Mode		B1/Detail Timing		
Resolution	V [Hz]	Resolution	V [Hz]	Normal
640x480p 4:3	60.0	1920x1080	240.00	V
720x480p 16:9	60.0	2560x1440	120.00	V
1280x720p 16:9	60.0			
1920x1080i 16:9	60.0			
1920x1080p 16:9	60.0			
720x576p 16:9	50.0			
1280x720p 16:9	50.0			
1920x1080i 16:9	50.0			
1920x1080p 16:9	50.0			
1920x1080p 16:9	24.0			
1920x1080p 16:9	120.0			
2560 x 1080p 64:27	50.0			
2560 x 1080p 64:27	60.0			
3840 x 2160p 16:9	24.0			
3840 x 2160p 16:9	30.0			
3840 x 2160p 16:9	50.0			
3840 x 2160p 16:9	60.0			
4096 x 2160p 256:135	24.0			
4096 x 2160p 256:135	60.0			
3840x2160 16:9	120.0 *Only For HDMI 2.1			
4096x2160 256:135	120.0 *Only For HDMI 2.1			

ADDITIONAL INFORMATION

Audio Data			
Format	eARC	SPDIF	LPCM
LPCM(IEC 60958 PCM[30,31]	V	V	V
Dolby Digital(5.1)	V	V	
DTS	V	V	
Dolby Digital Plus(7.1)	V		
DTS-HD			
Dolby TrueHD/MAT	V		
ATMOS Passthrough	V		

ADDITIONAL INFORMATION

Image size and projection distance

(a) Screen Size		(b) Projection Distance				(c) Image Height		(d) Vertical Offset	
		minimum		maximum					
inch	mm	inch	mm	inch	mm	inch	mm	inch	mm
30.00	762	31.38	797	50.20	1275	14.71	374	2.35	60
40.00	1016	41.84	1063	66.94	1700	19.61	498	3.14	80
50.00	1270	52.29	1328	83.67	2125	24.51	623	3.92	100
60.00	1524	62.75	1594	100.41	2550	29.42	747	4.71	120
70.00	1778	73.21	1860	117.14	2975	34.32	872	5.49	139
80.00	2032	83.67	2125	133.87	3400	39.22	996	6.28	159
90.00	2286	94.13	2391	150.61	3825	44.12	1121	7.06	179
100.00	2540	104.59	2657	167.34	4250	49.03	1245	7.84	199
110.00	2794	115.05	2922	184.08	4676	53.93	1370	8.63	219
120.00	3048	125.51	3188	200.81	5101	58.83	1494	9.41	239
130.00	3302	135.97	3454	217.55	5526	63.73	1619	10.20	259
140.00	3556	146.42	3719	234.28	5951	68.64	1743	10.98	279
150.00	3810	156.88	3985	251.01	6376	73.54	1868	11.77	299
200.00	5080	209.18	5313	334.69	8501	98.05	2491	15.69	398
250.00	6350	261.47	6641	418.36	10626	122.57	3113	19.61	498
300.00	7620	313.77	7970	502.03	12751	147.08	3736	23.53	598

Desired image size:

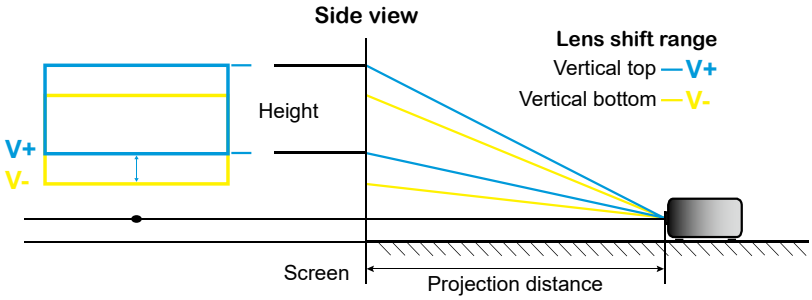

Lens shift range:

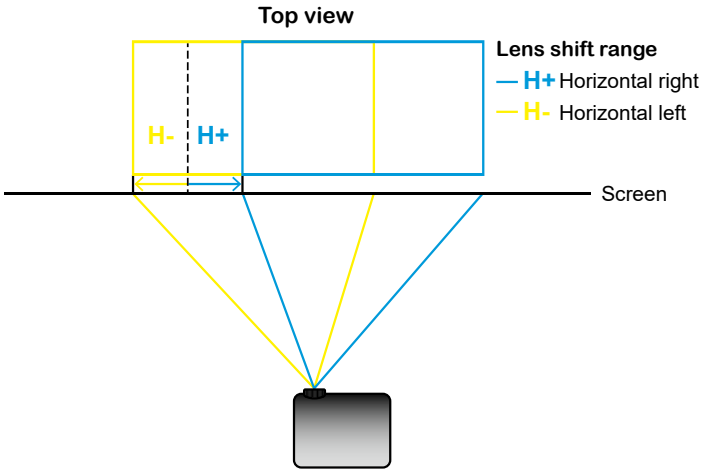

ADDITIONAL INFORMATION

Projector dimensions and ceiling mount installation

1. To prevent damage to your projector, please use the Optoma ceiling mount.
2. If you wish to use a third party ceiling mount kit, please ensure the screws used to attach a mount to the projector meet the following specifications:
   - Screw type: M6*10
   - Minimum screw length: 10mm

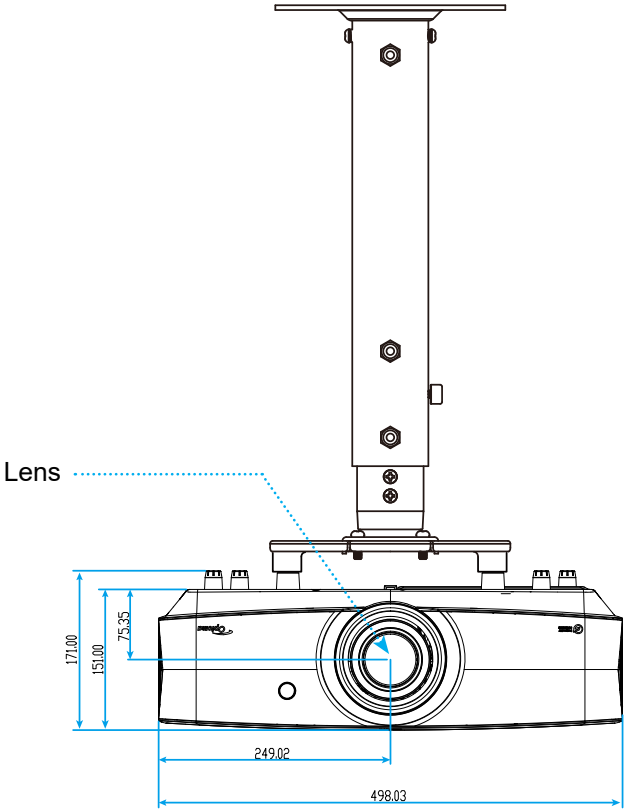

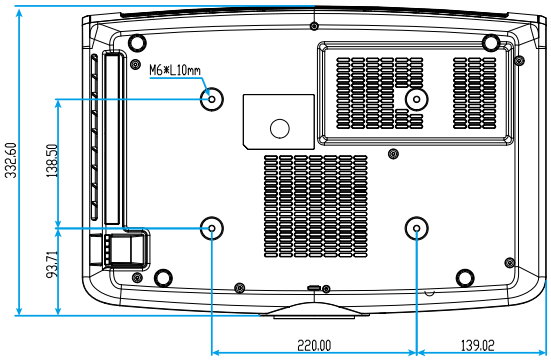

Unit: mm

Note: *Please note that damage resulting from incorrect installation will void the warranty.*

Warning:

- If you buy a ceiling mount from another company, please be sure to use the correct screw size. Screw size will vary depending on the thickness of the mounting plate.
- Be sure to keep at least 10 cm gap between the ceiling and the bottom of the projector.
- Avoid installing the projector near a heat source.

ADDITIONAL INFORMATION

IR remote codes

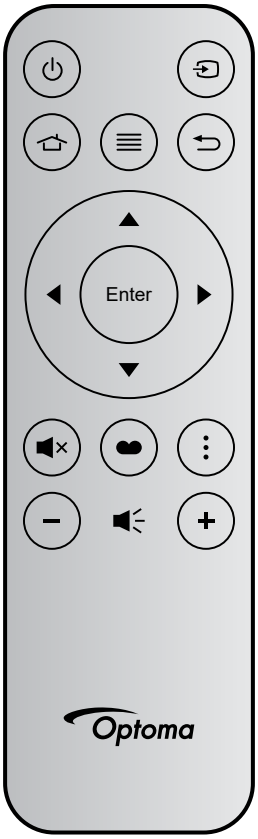

Key		Key num	MTX.	Format	Data0	Data1	Data2	Data3	Description
Power on / off	⏻	K12	04	F1	32	CD	71	8E	Refer to the “Powering on / off the projector” on page 24.
Source	⇥	K3	11	F1	32	CD	18	E7	Press ⇥ to select an input signal.
Home	⌂	K13	03	F1	32	CD	92	6D	Press ⌂ to return to the Home screen.
Menu	≣	K8	17	F1	32	CD	0E	F1	Press ≣ to launch the on-screen display (OSD) menu. To exit OSD, press ≣ again.
Return	⮌	K4	10	F1	32	CD	86	79	Press ⮌ to return to the previous page.
Up	▲	K7	18	F2	32	CD	11	EE	Use ▲ ▼ ◀ ▶ to select items or make adjustments to your selection.
Left	◀	K14	02	F2	32	CD	10	EF	
Right	▶	K5	09	F2	32	CD	12	ED	
Down	▼	K2	19	F2	32	CD	14	EB	
Enter	**Enter**	K9	16	F1	32	CD	0F	F0	Confirm your item selection.
Mute	🔇×	K15	01	F1	32	CD	52	AD	Press 🔇× to turn off/on the projector built-in speaker.
Display Mode	⬬	K10	15	F1	32	CD	91	6E	Press ⬬ to display the Display Mode menu. To exit the Display Mode menu, press ⬬ again.
APP menu	⋮	K6	08	F1	32	CD	25	DA	Press ⋮ to open the APP menu.
Volume -	–	K11	12	F2	32	CD	0C	F3	Press – to decrease the volume.
Volume +	+	K1	05	F2	32	CD	09	F6	Press + to increase the volume.

ADDITIONAL INFORMATION

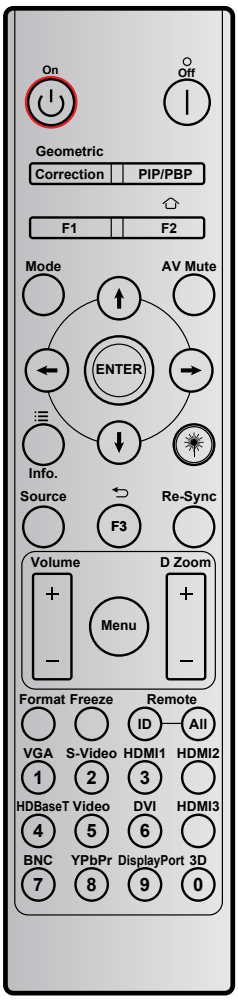

Key	Printing-key definition	Key code				Repeat
		BYTE1	BYTE2	BYTE3	BYTE4	
		customer 0	customer 1	data 0	data 1	
Power On ⏻	On	32	CD	02	#BYTE3	F2
Power Off |	Off	32	CD	2E	#BYTE3	F2
Geometric Correction	Geometric Correction	32	CD	96	#BYTE3	F2
PIP/PBP	PIP/PBP	32	CD	78	#BYTE3	F2
F1	F1	32	CD	26	#BYTE3	F2
Home	F2/Home	32	CD	27	#BYTE3	F2
Mode	Mode	32	CD	95	#BYTE3	F2
Four directional select keys (↑/↓/←/→)	Up arrow	32	CD	C6	#BYTE3	F2
	Down arrow	32	CD	C7	#BYTE3	F2
	Left arrow	32	CD	C8	#BYTE3	F2
	Right arrow	32	CD	C9	#BYTE3	F2
Enter	Enter	32	CD	C5	#BYTE3	F2
AV Mute	AV Mute	32	CD	03	#BYTE3	F2
APP Settings	Info./ APP Menu	32	CD	25	#BYTE3	F2

ADDITIONAL INFORMATION

Key	Printing-key definition	Key code				Repeat
		BYTE1	BYTE2	BYTE3	BYTE4	
		customer 0	customer 1	data 0	data 1	
Laser ✷	Laser	N/A				
Source	Source	32	CD	18	#BYTE3	F2
Back	F3/Back	32	CD	66	#BYTE3	F2
Re-Sync	Re-Sync	32	CD	04	#BYTE3	F2
Volume	Volume +	32	CD	09	#BYTE3	F2
	Volume -	32	CD	0C	#BYTE3	F2
D Zoom	D Zoom +	32	CD	08	#BYTE3	F2
	D Zoom -	32	CD	0B	#BYTE3	F2
Menu	Menu	32	CD	88	#BYTE3	F2
Format	Format	32	CD	15	#BYTE3	F2
Freeze	Freeze	32	CD	06	#BYTE3	F2
Remote	ID	3201~ 3299		N/A		
	All	32CD		N/A		
1 / VGA	1/VGA	32	CD	8E	#BYTE3	F2
2 / S-Video	2/S-Video	32	CD	1D	#BYTE3	F2
3 / HDMI1	3/HDMI1	32	CD	16	#BYTE3	F2
HDMI2	HDMI2	32	CD	9B	#BYTE3	F2
4 / HDBaseT	4/HDBaseT	32	CD	70	#BYTE3	F2
5 / Video	5/Video	32	CD	1C	#BYTE3	F2
6 / DVI	6/DVI	32	CD	19	#BYTE3	F2
HDMI3	HDMI3	32	CD	98	#BYTE3	F2
7 / BNC	7/BNC	32	CD	1A	#BYTE3	F2
8 / YPbPr	8/YPbPr	32	CD	17	#BYTE3	F2
9 / DisplayPort	9/DisplayPort	32	CD	9F	#BYTE3	F2
0 / 3D	0/3D	32	CD	89	#BYTE3	F2

ADDITIONAL INFORMATION

Troubleshooting

If you experience a problem with your projector, please refer to the following information. If a problem persists, please contact your local reseller or service center.

Image problems

No image appears on-screen

- Ensure all the cables and power connections are correctly and securely connected as described in the "Installation" section.
- Ensure the pins of connectors are not crooked or broken.
- Ensure that the "Mute" feature is not turned on.

Image is out of focus

- Turn the focus ring clockwise or counterclockwise until the image is sharp and legible. (Please see page *20)*.
- Make sure the projection screen is between the required distance from the projector. (Please refer to page *76*).

The image is stretched when displaying 16:9 DVD title

- When you play anamorphic DVD or 16:9 DVD, the projector will show the best image in 16: 9 format on projector side.
- If you play the V-Stretch format DVD title, please change the format as V-Stretch in projector OSD.
- If you play 4:3 format DVD title, please change the format as 4:3 in projector OSD.
- Please setup the display format as 16:9 (wide) aspect ratio type on your DVD player.

Image is too small or too large

- Turn the zoom lever clockwise or counterclockwise to increase or decrease the projected image size. (Please see page *20)*.
- Move the projector closer to or further from the screen.
- Press "Menu" on the projector panel, go to "Display → Aspect Ratio". Try the different settings.

Image has slanted sides:

- If possible, reposition the projector so that it is centered on the screen and below the bottom of the screen.

Image is reversed

- Select "Setup ➞ Projection Orientation" from the OSD and adjust the projection direction.

ADDITIONAL INFORMATION

Other problems

The projector stops responding to all controls

- If possible, turn off the projector, then unplug the power cord and wait at least 20 seconds before reconnecting power.

If the Lens Shift knobs stop responding (to move the image up/down/left/right), please follow the below steps:

- Turn the lens shift knobs clockwise or counterclockwise with a press-down force. This will release the protection mechanisms and allow them to work once again. (The lens shift knobs have this lock function to prevent from being broken. It will make an obvious sound, to let users know it has already reached the limit position.)

Remote control problems

If the remote control does not work

- Check the operating angle of the remote control is pointed within ±15° to the IR receiver on the projector.
- Make sure there are not any obstructions between the remote control and the projector. Move to within 6 m (19.7 ft) of the projector.
- Make sure batteries are inserted correctly.
- Replace batteries if they are exhausted.

ADDITIONAL INFORMATION

Warning indicators

When the warning indicators (see below) light up or flash, the projector will automatically shutdown:

- “Laser” LED indicator is lit red and if “Power” indicator flashes red.
- “Temp” LED indicator is lit red and if “Power” indicator flashes red. This indicates the projector has overheated. Under normal conditions, the project can be switched back on.
- “Temp” LED indicator flashes red and if “Power” indicator flashes red.

Unplug the power cord from the projector, wait for 30 seconds and try again. If the warning indicator light up or flash, please contact your nearest service center for assistance.

LED lightning messages

Message	Power LED		Temp LED	Laser LED
	(Red)	(Blue)	(Red)	(Red)
Standby state (Input power cord)	Steady light	-	-	-
Power on (Warming)	-	Flashing (0.5 sec off / 0.5 sec on)	-	-
Power on and Laser lighting	-	Steady light	-	-
Power off (Cooling)	-	Flashing (0.5 sec off / 0.5 sec on). Back to red steady light when cooling fan turns off.	-	-
Error (Laser failure)	Flashing	-	-	Steady light
Error (Fan failure)	Flashing	-	Flashing	-
Error (Over temp.)	Flashing	-	Steady light	-
Standby State (Burn in mode)	-	Flashing	-	-
Burn-in (Warming) (*)	-	Flashing	-	-
Burn-in (Cooling) (*)	-	Flashing	-	-
Burn in (Laser lighting) (*)	-	Flashing (3 sec on / 1 sec off)	-	-
Burn in (Laser off) (*)	-	Flashing (1 sec on / 3 sec off)	-	-

Note:

- *(*)If power is less than 0.5W and the power LED is red, change the power LED to flashing red.*
  - *a) Turn all LEDs off after the OSD menu disappears.*
  - *b) Power LED on: No signal; OSD disappears.*
  - *c) Power LED off: Signal is detected; OSD disappears.*

ADDITIONAL INFORMATION

- Power off:

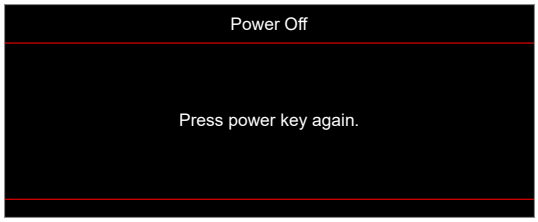

- Temperature warning:

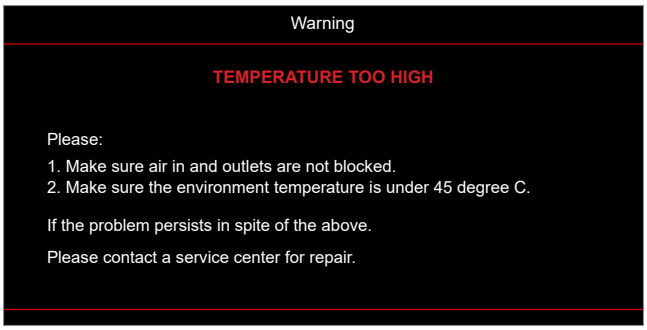

ADDITIONAL INFORMATION

Specifications

Item	Description
Maximum Resolution	• HDMI (2.1): 3840x2160@120Hz • HDMI port is up to 3840*2160/120Hz (FRL)
Lens	• Throw ratio: 1.2~1.92 • F-stop: 2.3~2.8 • Focal length: 17.3~27.88mm • Zoom range: 1.6X
Offset	126%±5%
Image size	30.6”~301.1” (Optimized@82”)
Projection distance	1000mm@30.6” ~ 10000mm@301.1”
I/Os	• HDMI 2.0 x2 • HDMI 2.1 x1 • USB Type-A x3 - 1 for Power USB 5V/1.5A and DLPC7541 FW upgrade - 2 for Power USB 5V/0.9A and multi-media, Wi-Fi dongle, Andriod TV processor FW upgrade • RJ45 x1 • S/PDIF x1 (Support PCM, Dolby Digital) • 3D Sync x1 (3D Sync signal output, Mini-Din 3 Pin connector) • 12V Trigger x2 (DC output. 3.5mm jack female; 12V/0.5A max.) • Audio Out x1 (3.5mm jack, female, black) • RS232 x1 (Male (9-Pin D-sub) type)
Colour	1073.4 Million color
Scan rate	• Horizontal scan rate: 15~255 KHz • Vertical scan rate: 24~240Hz, 240 Hz for 1080P
Speaker	5W x2
Power consumption	• Minimum (ECO mode): - 165 W (typical), 190 W (max.) @110VAC - 160 W (typical), 184 W (max.) @220VAC • Maximum (Bright mode): - 300 W (typical), 345 W (max.) @110VAC - 295 W (typical), 339 W (max.) @220VAC
Input current	3.7A
Installation orientations	Front, Rear, Ceiling, Rear-top
Dimensions (W x D x H)	• Without feet: 498.1 x 331.1 x 154 mm (19.4 x 13.1 x 6.1 inches) • With feet: 498.1 x 331.1 x 171 mm (19.4 x 13.1 x 6.7 inches)
Weight	8.9kg ±0.3kg
Environmental	Operating in 0~40°C, 10% to 80% humidity (non-condensing)

Note: *All specifications are subject to change without notice.*

ADDITIONAL INFORMATION

Optoma global offices

For service or support, please contact your local office.

USA
Optoma Technology, Inc.
47697 Westinghouse Drive.
Fremont, Ca 94539

888-289-6786
510-996-4794
services@optoma.com

Canada
Optoma Technology, Inc.
47697 Westinghouse Drive.
Fremont, Ca 94539

888-289-6786
510-996-4794
services@optoma.com

Latin America
Optoma Technology, Inc.
47697 Westinghouse Drive.
Fremont, Ca 94539

888-289-6786
510-996-4794
services@optoma.com

Europe
1 Bourne End Mills
Hemel Hempstead
Hertfordshire
HP1 2UJ
United Kingdom
www.optoma.eu
Service Tel : +44 (0)1923 691865

+44 (0) 1923 691 800
+44 (0) 1923 691 888
service@tsc-europe.com

Benelux BV
Optoma Benelux BV
Europalaan 770 D
1363BM Almere
The Netherlands
www.optoma.nl

+31 (0) 36 8200 250
+31 (0) 36 548 9052

France
Bâtiment E
81-83 avenue Edouard Vaillant
92100 Boulogne Billancourt, France

+33 1 41 46 12 20
+33 1 41 46 94 35
savoptoma@optoma.fr

Spain
C/ José Hierro, 36 Of. 1C 28529 Rivas
VaciaMadrid, Spain

+34 91 499 06 06
+34 91 670 08 32

Deutschland
Optoma Deutschland GmbH
Am Nordpark 3
41069 Mönchengladbach
Deutschland

+49 (0) 2161 68643 0
+49 (0) 2161 68643 99
info@optoma.de

Scandinavia
Postboks 9515 Åskollen
Kniveveien 29
Drammen
3036
Norway

+47 32 98 89 90
+47 32 98 89 99
info@optoma.no

Korea
https://www.optoma.com/kr/

Japan
https://www.optoma.com/jp/

Taiwan
https://www.optoma.com/tw/

China
Room 2001, 20F, Building 4,
No.1398 Kaixuan Road,
Changning District
Shanghai, 200052, China

+86-21-62947376
+86-21-62947375
www.optoma.com.cn

Australia
https://www.optoma.com/au/