Ducted Passive Heat System for Heat Management

Ducted Passive Heat - Front Discharge: PHFR-MCE-36, PHFR-MCE-48, PHFR-MCE-60, PHFR-MCE-72

Passive Heat Appliance Models: MEZZO-C Series, CRAVE-C Series, ECHELON-C Series

Installation Instructions

Leave this manual with party responsible for use and operation.

CAUTION! Risk of Cuts, Abrasions or Flying Debris. *Wear protective gloves and safety glasses during installation. Sheet metal edges are sharp.*

CAUTION! Do not install damaged components. *If any parts are missing or damaged, contact your dealer before starting installation.* ***DO NOT*** *install a damaged kit.*

DANGER

HOT GLASS WILL CAUSE BURNS.

DO NOT TOUCH GLASS UNTIL COOLED.

NEVER ALLOW CHILDREN TO TOUCH GLASS.

A barrier designed to reduce the risk of burns from the hot viewing glass is provided with this appliance and must be installed for the protection of children and other at-risk individuals.

WARNING! Risk of Fire!

- *Combustible materials MUST NOT overlap or be placed behind a decorative front.*
- *DO NOT apply combustible materials beyond the minimum clearances. Comply with all minimum clearances to combustibles as specified. Overlapping materials could ignite and will interfere with proper operation of decorative fronts.*

Table of Contents

1. Introduction 1
2. Kit Contents 2
3. Preparation 3
4. Framing (2 X 4 Studs) 6
5. Installation Instructions 7
6. Maintenance 15

1. Introduction

The Ducted Passive Heat (PHFR-MCE-XX) System conveys warm air from the fireplace into the same room through a front discharge slot connected to the appliance heat management knock outs with the provided flex ducting. Installation of the Ducted Passive Heat kit must be done in conjunction with the appliance installation.

Installation of this kit MUST be performed by a qualified service technician.

WARNING! Risk of Fire! *DO NOT install the Ducted Passive Heat (PHFR-MCE-XX) Heat Management System with models that are not approved. Overheating will occur.*

Note: The Ducted Passive Heat Trim Kit is required with the Ducted Passive Heat kit and must be purchased separately.

See Table 1. Follow instructions included with the trim kit to complete installation of the Passive Heat system.

The Ducted Passive Heat kit is tested and safe when installed in accordance with this installation manual. It is your responsibility to read all instructions before starting installation and to follow these instructions carefully during installation.

The Passive Heat kit is carefully engineered and must be installed only as specified. If you modify it or any of its components you will void the warranty, and you may possibly cause a fire hazard. Installation must be done according to applicable local, state, provincial, and/or national codes.

REQUIRED TRIM KITS (Purchased Separately)	
Ducted Passive Heat Kit	**Ducted Passive Heat Trim Kit**
PHFR-MCE-36	PHTRIM-MCE-36
PHFR-MCE-48	PHTRIM-PRIMO-48
PHFR-MCE-60	PHTRIM-PRIMO-60
PHFR-MCE-72	PHTRIM-MCE-72

Table 1.1 Required Trim Kits

2. Kit Contents

Verify and remove contents from packaging before beginning installation. See Figure 2.1 (Front Discharge).

Note: The flexible duct used with the Ducted Passive Heat is manufactured and marked to the requirements of UL-181, Class I air duct.

Contents of Ducted Passive Heat Front Discharge Kit

		Ducted Passive Heat SKU			
DESCRIPTION	**SERVICE PART NO.**	**PHFR-MCE-36**	**PHFR-MCE-48**	**PHFR-MCE-60**	**PHFR-MCE-72**
Plenum*	2560-207	2			
	2560-107		2		
	2560-208			2	
	2560-209				2
Collar	SRV659-125	4	4	8	8
Flex Air Duct (6” Diameter x 25 ft.)	659-200	1	1	1	1
Gear Clamp: Large	SRV662-803	4	4	8	8
Hurricane Screw	2005-861	14	14	24	24
	Replacement part: 2005-861/25	1	1	1	1
Finishing Trim	2560-114	1	1	1	1
Self-Tapping #8 Screw	030-860	4	4	8	8
	Replacement Part: 030-860/8	1	1	1	1
Pull Tool	2600-200	1 Set	1 Set	1 Set	1 Set
Inner Flue, Top	Service part not available	2	2	4	4

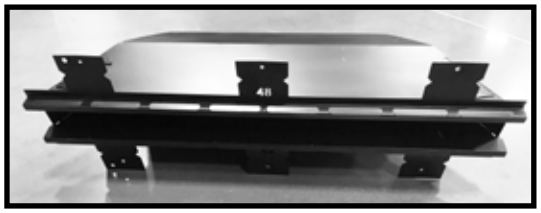

Plenum: 2560-107 Shown (PHFR-MCE-48)

***Actual part number, size and appearance will vary depending on model.**

2005-861
Hurricane Screw

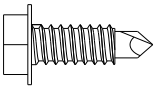

030-860
Self-Tapping #8 Screw

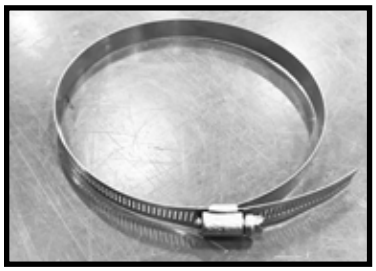

SRV662-803
Gear Clamp: Large

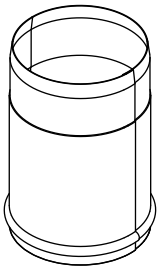

Inner Flue, Top

659-200
6 Inch Round Duct

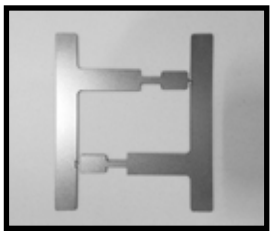

2600-200 Pull Tool
(1 Set)

SRV659-125 Collar

2560-114
Finishing Trim

Figure 2.1 Front Discharge Passive Heat Kit Components

3. Preparation

Plan the location of the appliance and the warm air duct runs. See Table 3.1.

WARNING! Risk of Fire!

- ***DO NOT*** *fold/kink/pinch/obstruct 6 inch flexible ducts. Appliance could overheat.*
- *Maintain 1 inch clearance around all sides of flexible duct.*

AIR DUCT LENGTH (Measurements in Inches)			
SIZE	**MIN.**	**MAX.***	**DUCT Quantity**
36	**28**	**150**	**2**
48	**28**	**150**	**2**
60	**28**	**100**	**4***
72	**28**	**100**	**4***
***This is the maximum vent run length possible with the included flex duct. Additional flex duct required for longer vent runs. Contact dealer to order.**			
Minimum of one inch clearance required around all sides of flexible duct.			

Table 3.1 Air Duct Length & Clearances

*Size 60 And 72 appliance models must use all 4 heat management knock outs unless the addition of 1 alternate heat management system is used (HEAT-OUT-GAS, HEAT-ZONE-GAS) in conjuction with the ducted passive heat.

If alternate heat management systems are used with the Ducted Passive Heat Kit (PHFR-MCE-XX), they must use an outside heat management knockout location on the far left or right of the appliance.

Things to consider:

Electrical Wiring:

It is recommended to maintain wire routing inside the stud pockets to reduce temperatures and visibility of wires.

Construction Materials:

It is recommended to plan ahead to reduce the amount of exposed finishing materials visible through the openings.

Clearance - Sprinkler to Passive Heat

Figure 3.1 references the clearances that must be adhered to when installing a sprinkler head near a passive heat discharge opening.

* If the distance from the top of the passive heat front discharge opening to the ceiling is 36 inches or greater, then there is no 36 inch clearance requirement. This is for a ceiling sprinkler head installation only.

Note: When installing a sprinkler head near a heat discharge opening, it is recommended to use a sprinkler head with an Extra High sprinkler activation temperature rating.

- When installing a sprinkler head exterior of the chase, maintain the following clearances to discharge openings (convection slots, passive heat registers, heat zone registers, etc.): 36 inches top, 18 inches sides and 6 inches bottom.

- **DO NOT** install a sprinkler head inside a chase that is set up for passive heat.

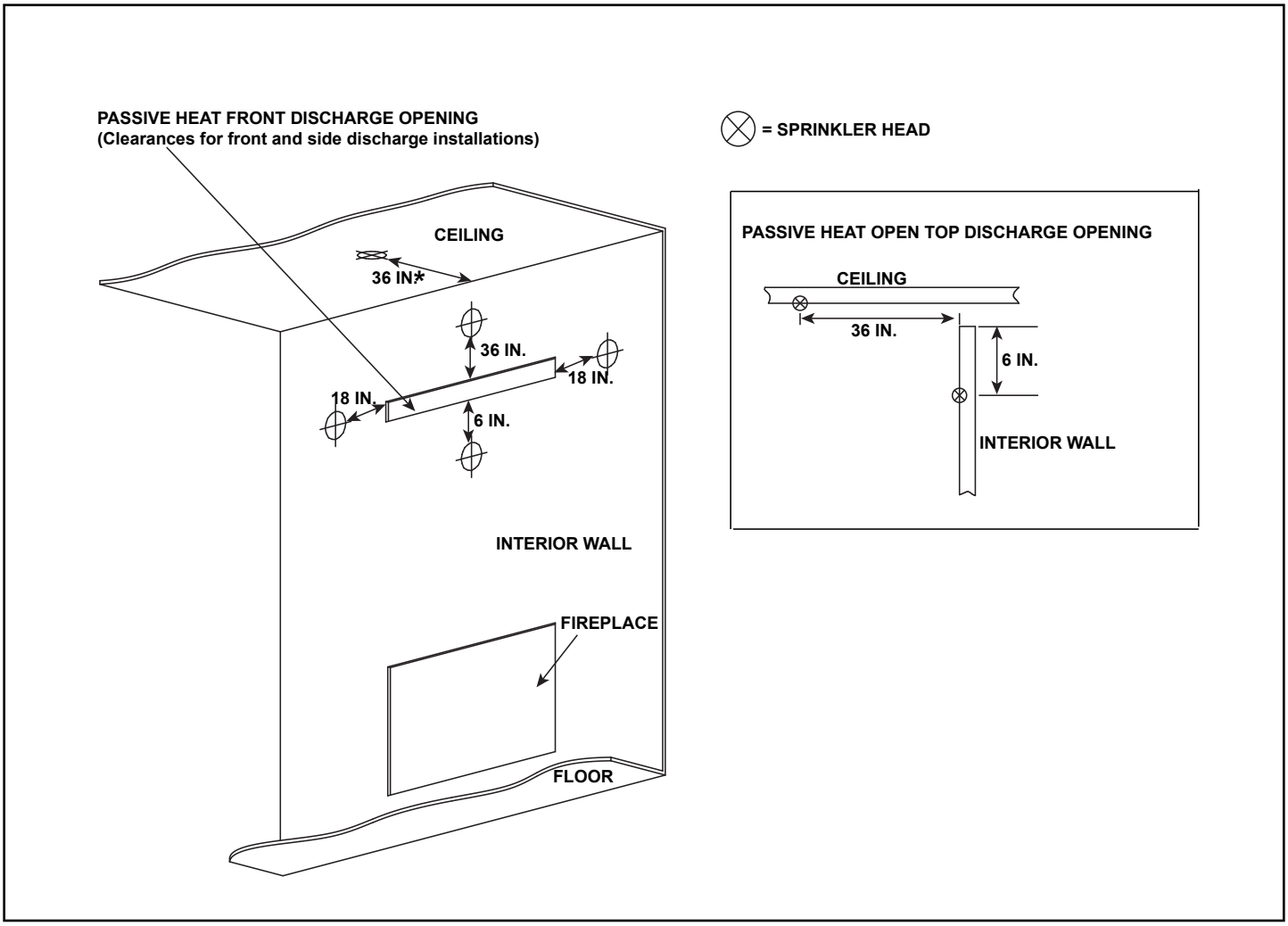

Figure 3.1 Sprinkler Head Clearance

Good Faith Guidelines for TV Installations
Above a MEZZO-C / CRAVE-C / ECHELON-C Fireplace with Passive Heat Option
(Single-Sided Appliance Shown)

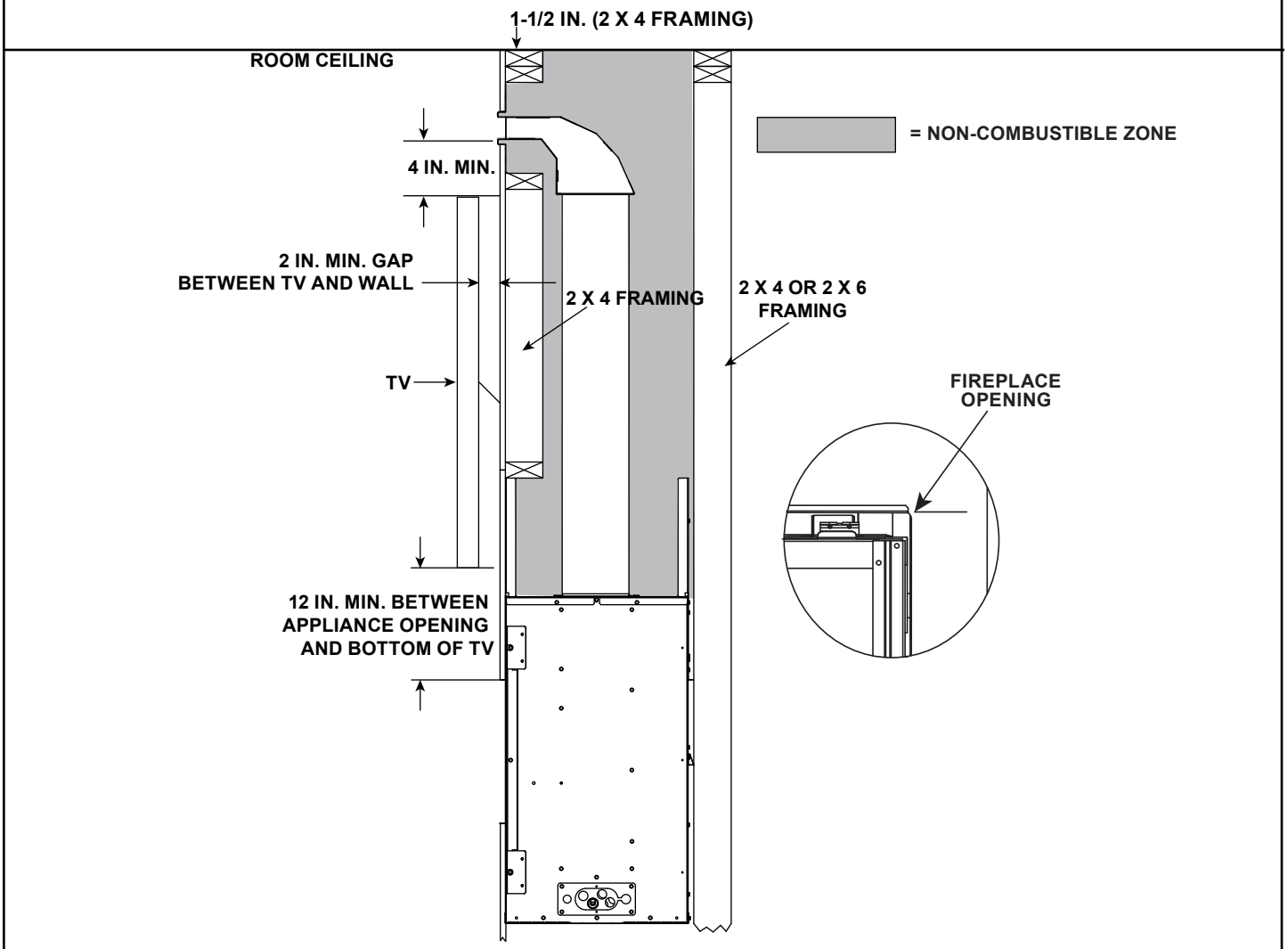

Figure 3.2 Good Faith Guidelines for TV Installations Above a MEZZO-C / CRAVE-C / ECHELON-C Fireplace with Passive Heat Option

4. Framing (2 X 4 Studs)

Clearances to Combustibles

Ducted Passive Heat Front Discharge
Ducted Passive Heat Kit (PHFR-MCE-XX)
Single-Sided or See-Through

***WARNING! Risk of Fire! DO NOT** allow any combustible or non-combustible objects or materials to be placed where the disruption of airflow in discharge zone could occur. Appliance and combustible materials will overheat.*

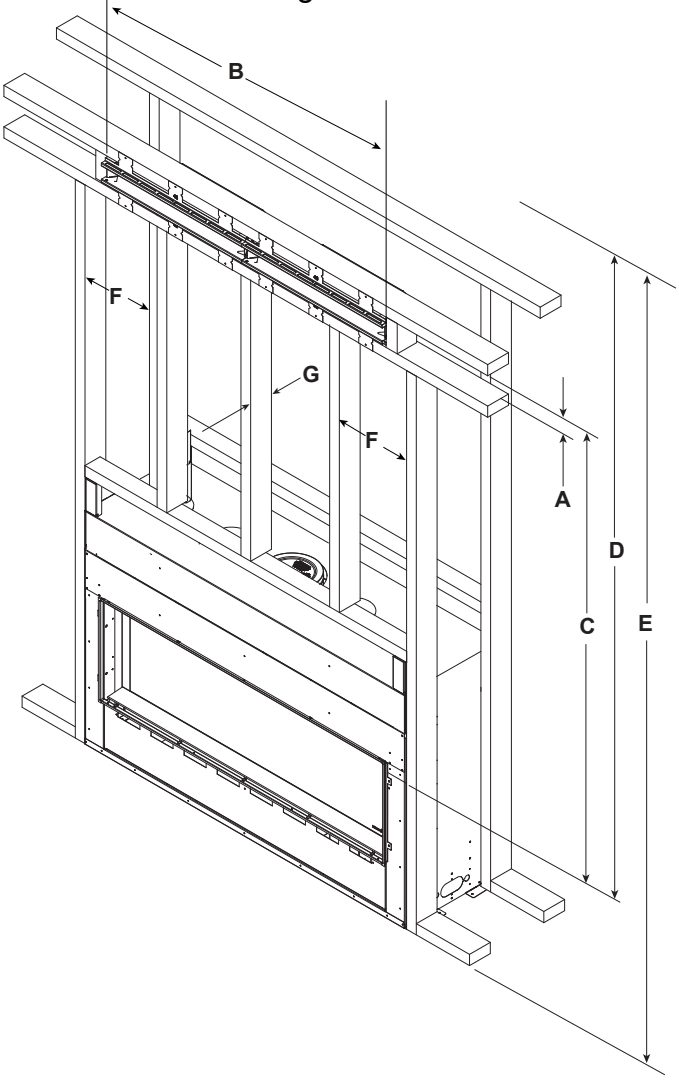

MINIMUM FRAMING DIMENSIONS								
FRONT DISCHARGE								
		A	B	C	D	E	F	G
		Height of Discharge Opening	Width of Discharge Opening	Clearance Opening to Framing	Clearance Opening to Ceiling	Clearance Bottom of Appliance to Ceiling	Framing	2 X 4 Studs
PHFR-MCE-36	Inches	6	38-3/4	50-1/2	53-1/2	78	16 inches (406 mm) on center	3-1/2
	millimeters	152	984	1283	1359	1981		89
PHFR-MCE-48	Inches	6	50-7/8	50-1/2	53-1/2	78		3-1/2
	millimeters	152	1292	1283	1359	1981		89
PHFR-MCE-60	Inches	6	62-3/4	50-1/2	53-1/2	78		3-1/2
	millimeters	152	1594	1283	1359	1981		89
PHFR-MCE-72	Inches	6	74-3/4	50-1/2	72	96-1/2		3-1/2
	millimeters	152	1899	1283	1829	2451		89

Figure 4.1 Clearances to Combustibles - Front Discharge

5. Installation Instructions

WARNING! Risk of Fire! *Remove ONLY the knockouts required for the specific heat management kits being installed. Appliance and combustible materials will overheat.*

CAUTION! Risk of Cuts, Abrasions or Flying Debris. *Wear protective gloves and safety glasses during installation. Sheet metal edges are sharp.*

PHFR-MCE-36 and PHFR-MCE-48 kits must be installed on the two inside passive heat knockouts. Outer knockouts may be used for additional heat management systems (HEAT-OUT-GAS, HEAT-ZONE-GAS). Do not remove the outer knockouts if unused.

PHFR-MCE-60 and PHFR-MCE-72 kits must be installed on all four passive heat knockouts unless a HEAT-OUT-GAS or HEAT-ZONE-GAS will be installed.

One additional heat management system may be used in conjunction with the Ducted Passive Heat kit. If an additional heat management system (HEAT-OUT-GAS, HEAT-ZONE-GAS) is installed, that system must use one of the outer (left or right) knockouts. The other three must be maintained for connection to the Ducted Passive Heat kit.

Only one passive heat option may be installed on a single appliance. Passive Heat kits without ducts may not be used in conjunction with the Ducted Passive Heat kit.

Note: For 36 and 48 sized models the kit will include two collars. The two inside knockout locations are the only ones used.

1. Remove the appropriate knockouts, as called out above, from the top of the appliance by dislodging them with a hammer and then using a screwdriver to remove from the holes. See Figure 5.1.

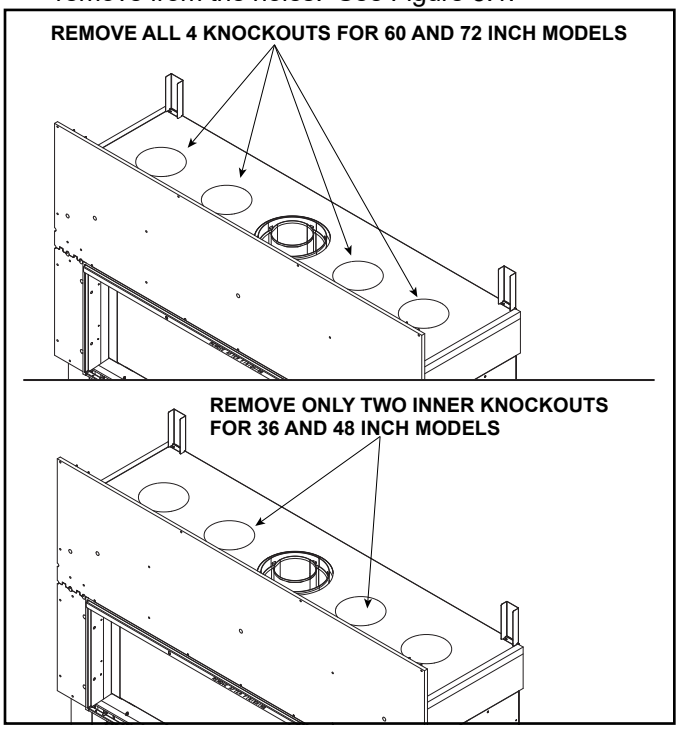

Figure 5.1 Remove Knockouts

2. Remove the insulation plug from each knockout. Discard. See Figure 5.2.

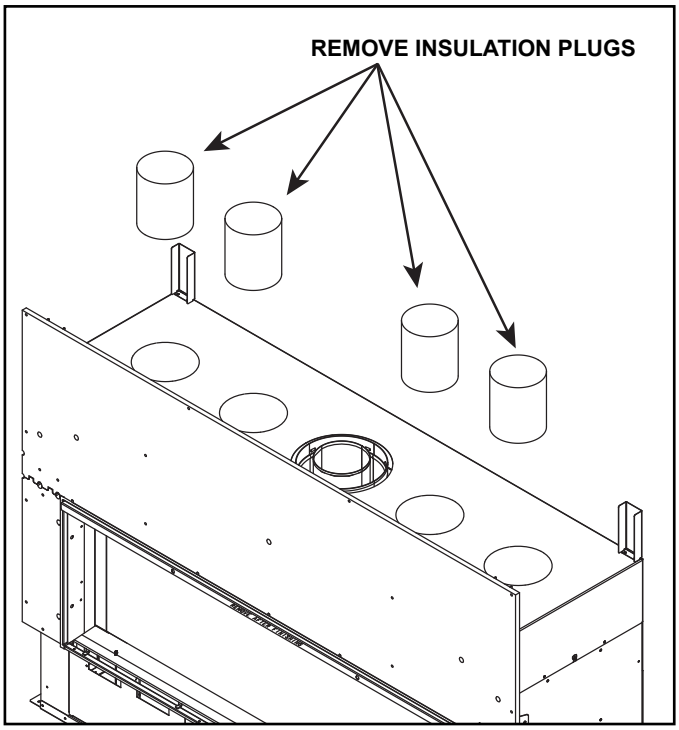

Figure 5.2 Remove Insulation Plugs

3. Set an inner flue in each of the holes where the knockouts were removed. See Figure 5.3.

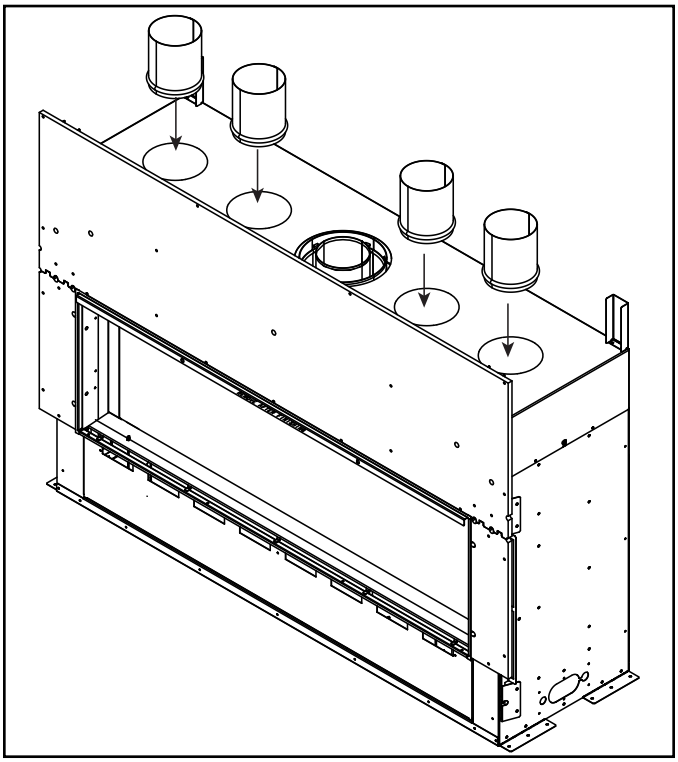

Figure 5.3 Install Inner Flues

4. Remove the screws from the heat shield as shown in Figure 5.7. Quantity and location of screws will vary between models.

5. Bend pull tools and break apart as shown in Figure 5.4 and Figure 5.5.

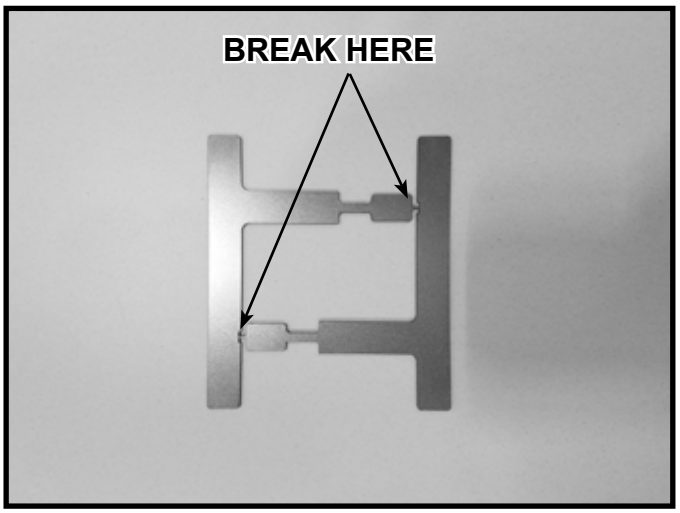

Figure 5.4 Bend and Break Pull Tools Apart

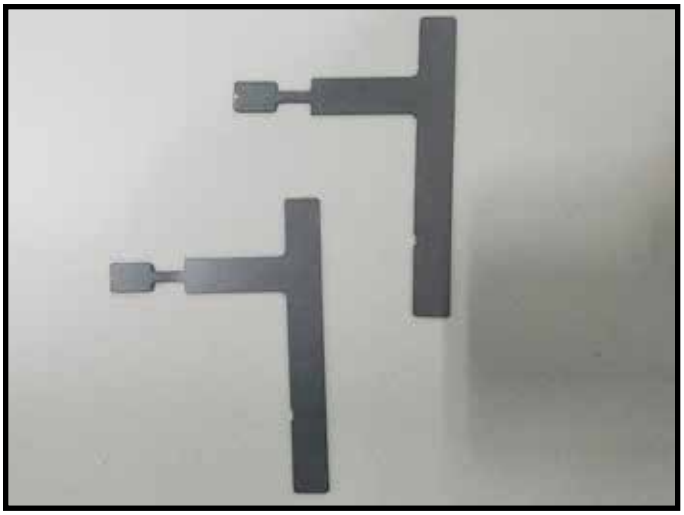

Figure 5.5 Pull Tools Separated

6. Insert pull tool into slots on left and right sides of appliance. See Figure 5.6.
7. Carefully pull the heat shield out of the appliance as shown in Figure 5.7 and Figure 5.8. Discard heat shield. Repeat procedure on other side if application is on a see-through appliance.

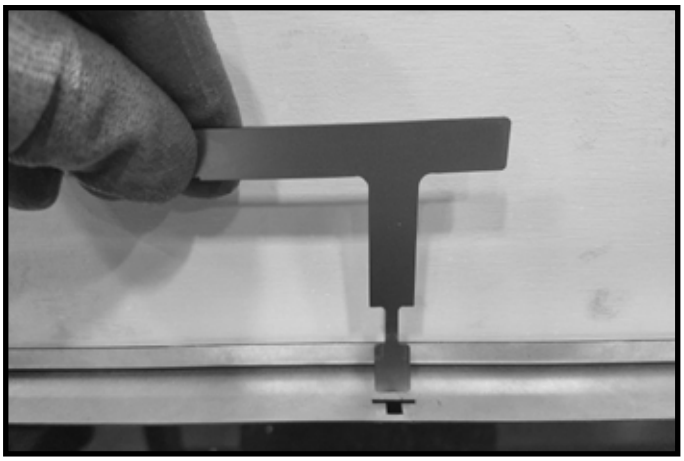

Figure 5.6 Pull Tool Inserted Into Slot

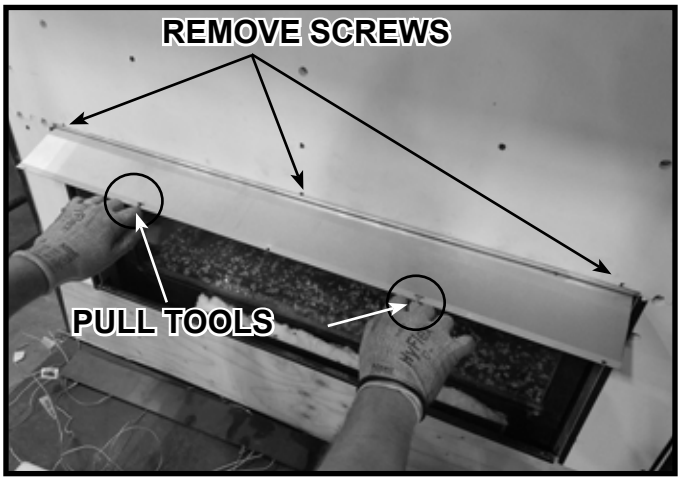

Figure 5.7 Use Pull Tools to Remove Heat Shield

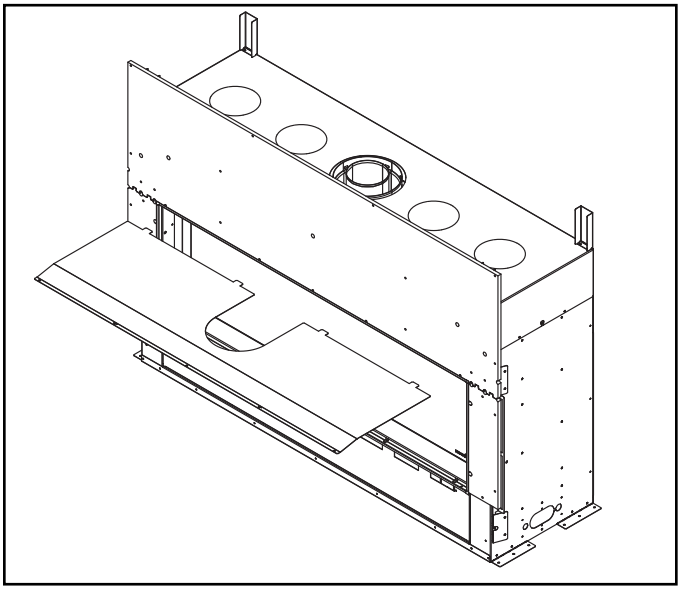

Figure 5.8 Remove Heat Shield

WARNING! Risk of Fire! *Remove all debris and objects from firebox top and appliance top before operating the appliance.*

8. Inspect for and remove all debris that may have accumulated or objects that may have been placed on the firebox top and appliance top during the installation process. All debris and objects must be removed prior to operation of the appliance. Firebox top and appliance top are shown in Figure 5.9.

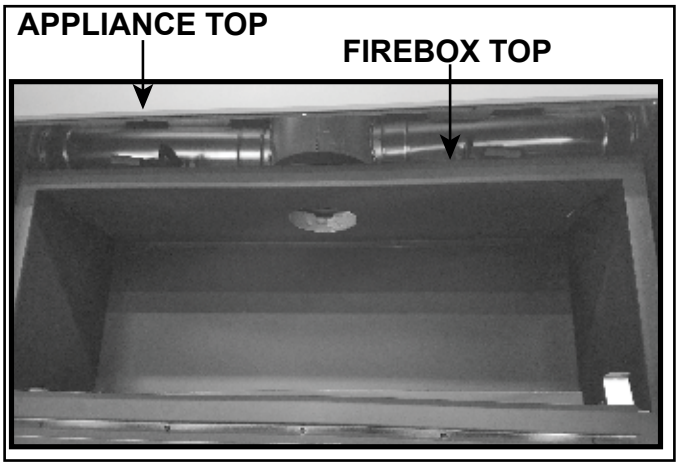

Figure 5.9

Install Plenums and Flexible Duct

9. Install collars over the openings using hurricane screws provided in the kit. PHFR-MCE-36 and PHFR-MCE-48 kits must be installed on the two inside passive heat knockouts. Outer knockouts may be used for alternate heat management systems. See Figure 5.10 and 5.11.

   PHFR-MCE-60 and PHFR-MCE-72 kits must be installed on all four passive heat knockouts. One additional heat management system may be used in conjunction with the Ducted Passive Heat kit. If an additional heat management system (HEAT-OUT-GAS, HEAT-ZONE-GAS) is installed, that system must use one of the outer (left or right) knockouts while the other three must be maintained for connection to the Ducted Passive Heat kit.

   Only one passive heat option may be installed on a single appliance. Passive Heat kits without ducts may not be used in conjunction with the Ducted Passive Heat kit.

WARNING! Risk of Fire! *DO NOT remove appliance heat management knock-outs unless an approved heat management system is installed. Appliance and combustible materials will overheat.*

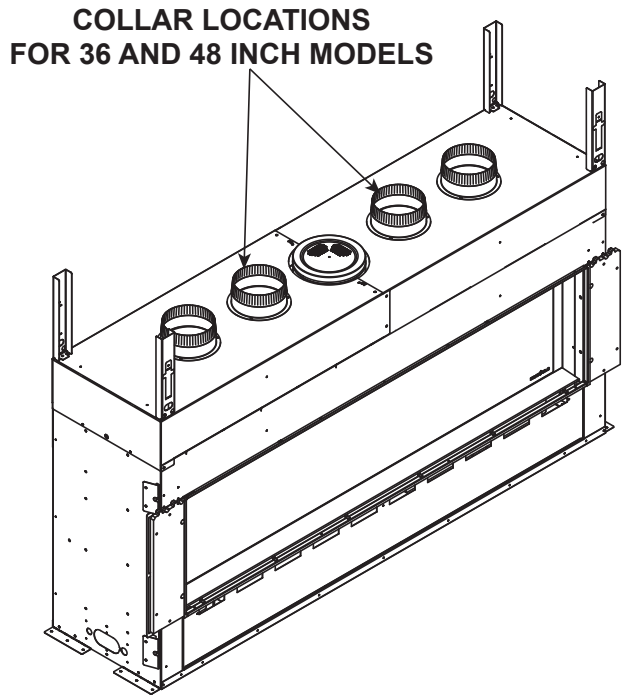

Figure 5.11 Remove Passive Heat Knockouts

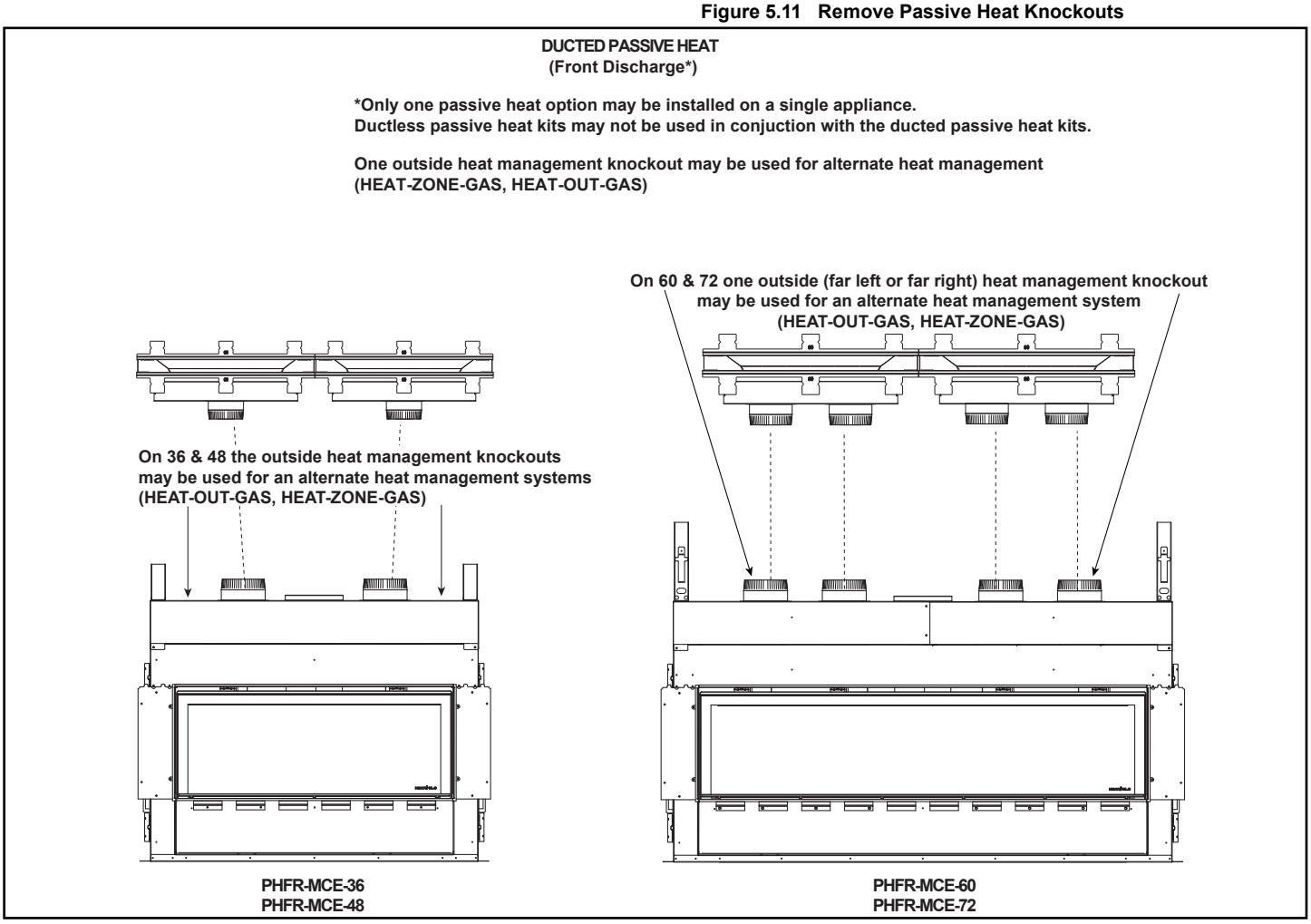

Figure 5.10 Ducted Passive Heat Front Discharge Configuration

10. Locate the finishing trim piece and break at the two places noted in Figure 5.12. Bend as indicated in Figure 5.13, Detail A, B, and C.

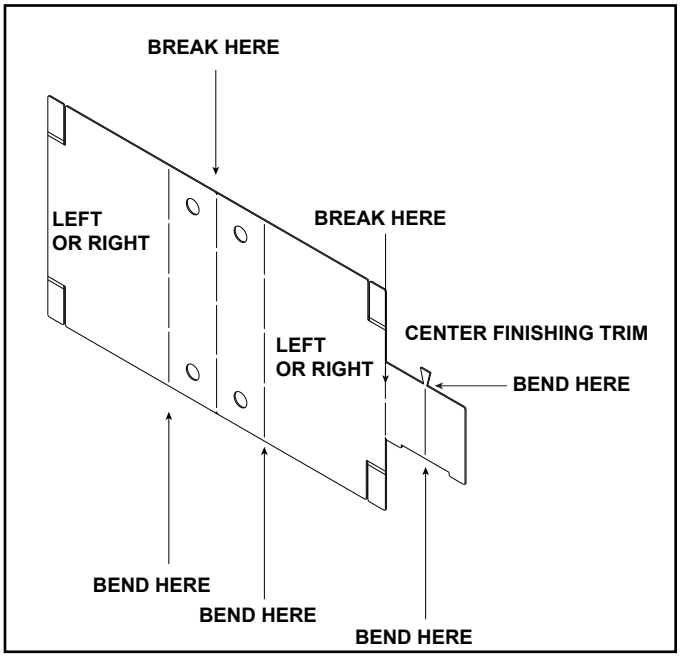

Figure 5.12 Finishing Trim

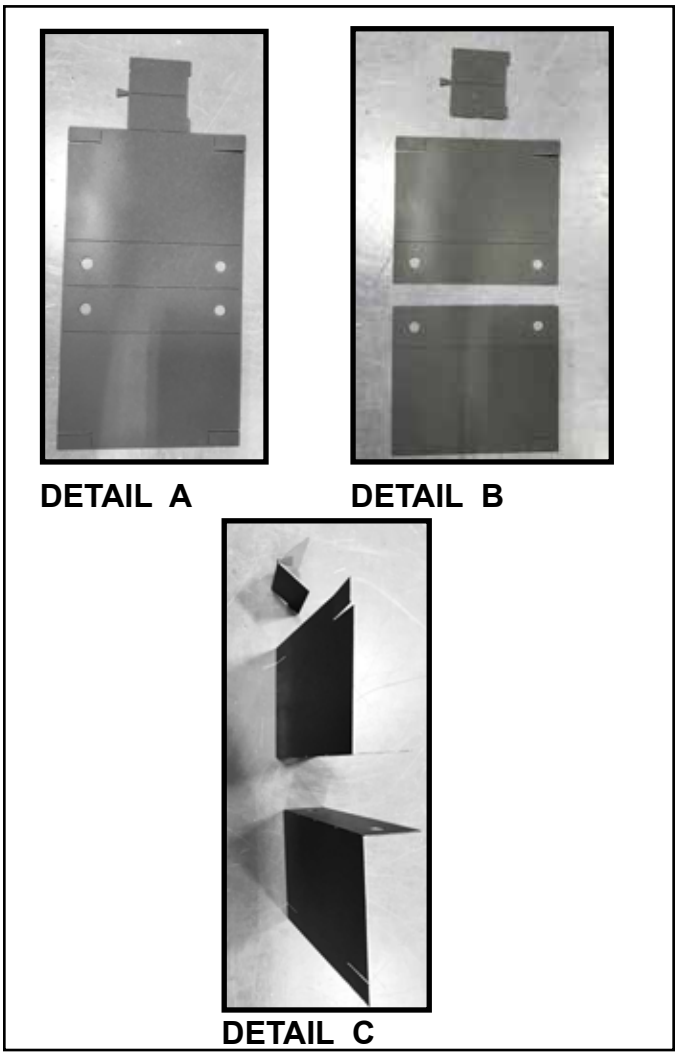

Figure 5.13 Break and Bend Finishing Trim

11. Install the left and right finishing trim pieces on the framing on the sides of the discharge opening using construction screws or nails as shown in Figure 5.14, Detail A and B. Notice that the screws are installed on the back side of the framing. See Figure 5.14 and Figure 5.29.

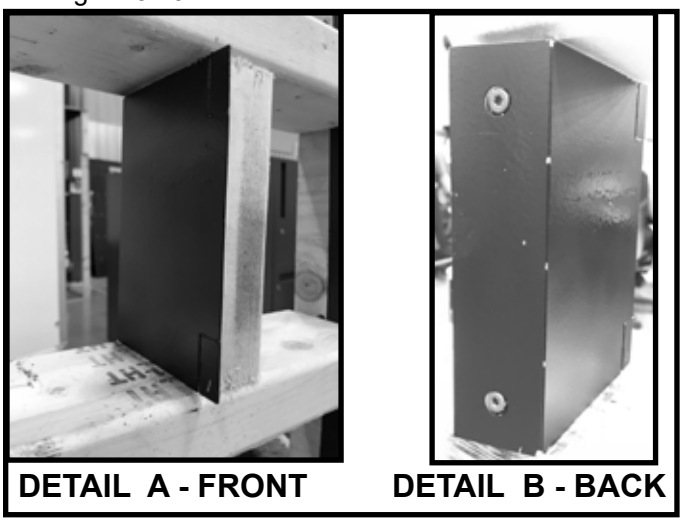

Figure 5.14 Finishing Trim Installed

12. Two passive heat plenums are included with the kit and both must be installed with the appliance or the appliance will overheat. The plenums are placed into the framed opening from inside the chase.

WARNING! Risk of Fire! *Two plenums* ***MUST*** *be installed for passive heat to function correctly. Overheating of appliance and combustible materials will occur.*

13. Position the first plenum into the wall by turning vertically to clear the studs. See Figure 5.15.

Figure 5.15 Turn Plenum Vertically to Clear Framing Studs

14. Turn plenum back to horizontal orientation and tilt to bring bottom nailing tabs through the opening first. Rotate the plenum forward to get the top nailing tabs through. See Figures 5.16, 5.17, and 5.18.

Figure 5.16 Rotate Plenum to Horizontal Orientation

15. Position the plenum adjacent to the finishing trim piece that was installed in Step 11 on the framing as shown in Figure 5.17 and Figure 5.18. The notches in the nailing tabs allow for vertical centering of the plenum and are to be lined up with the edge of the header as shown in Figure 5.19. Mount the plenum into the wall using drywall framing screws or nails. See Figure 5.20.

Note: Finishing trim pieces not installed on all photos.

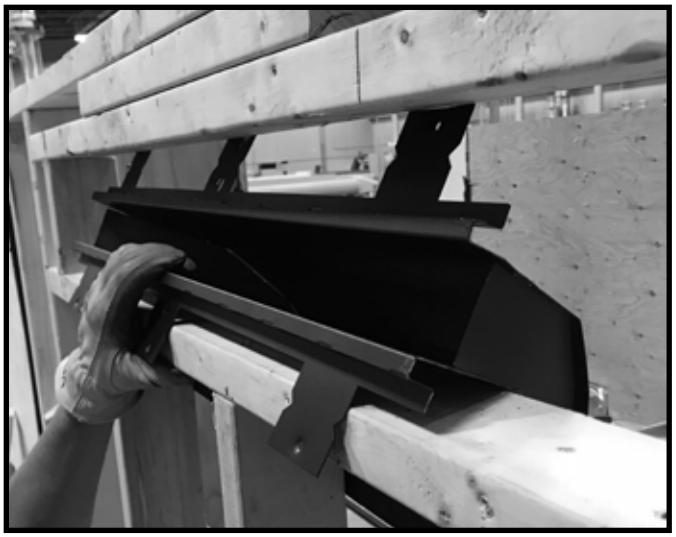

Figure 5.17 Place Plenum From Inside of the Chase

Figure 5.18 Position Plenum

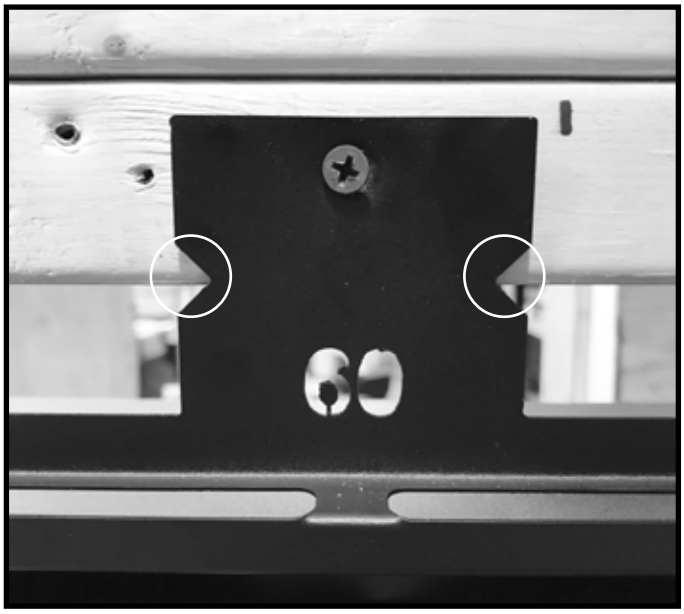

Figure 5.19 Secure Nailing Tabs

Figure 5.20 Plenum Secured in Place

16. Place the second plenum into position so that it sits side by side with the other plenum. The two plenums must be centered left to right in the framed opening.

Note: The two plenums must be touching each other in the center of the opening in order for the trim to fit properly. See Figure 5.21.

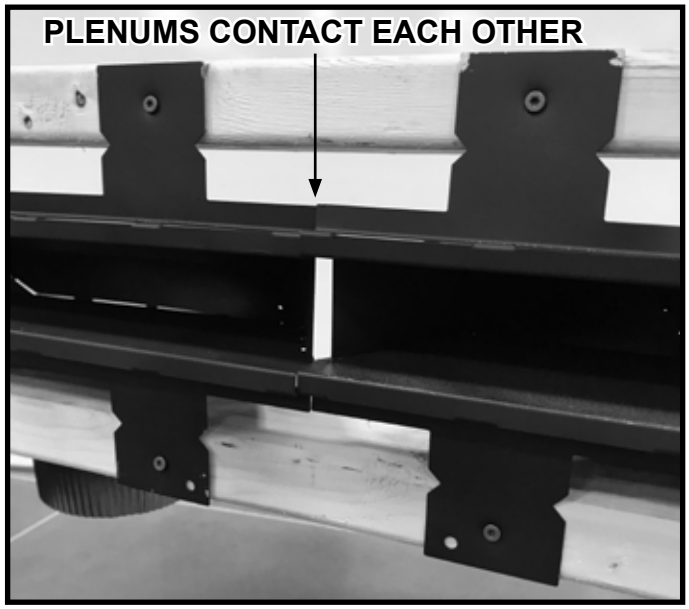

Figure 5.21 Plenums Contact Each Other

17. Insert the center finishing trim piece between the two plenums. See Figure 5.22 and 5.23.

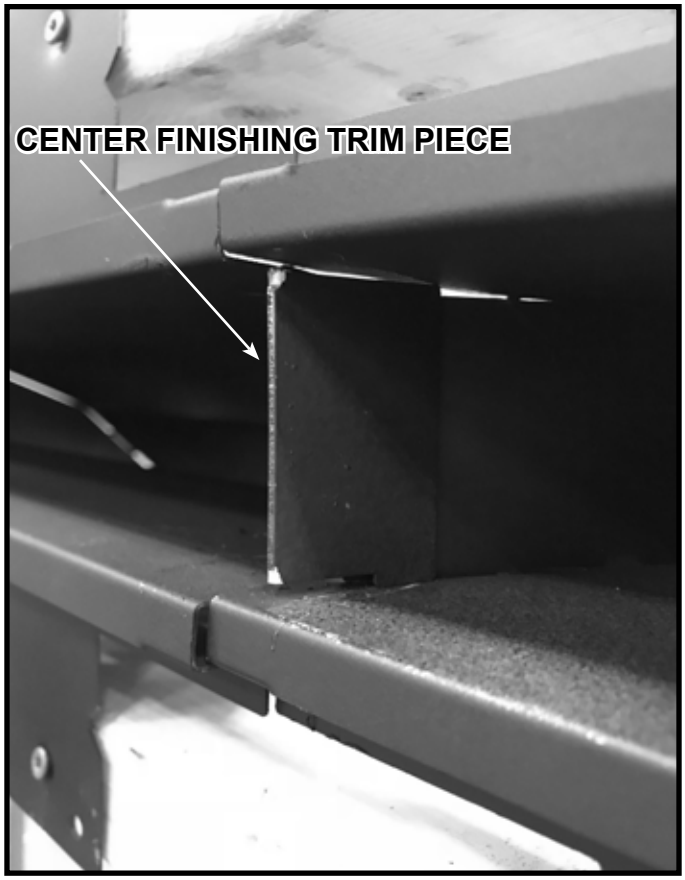

Figure 5.22 Insert Center Finishing Trim Piece

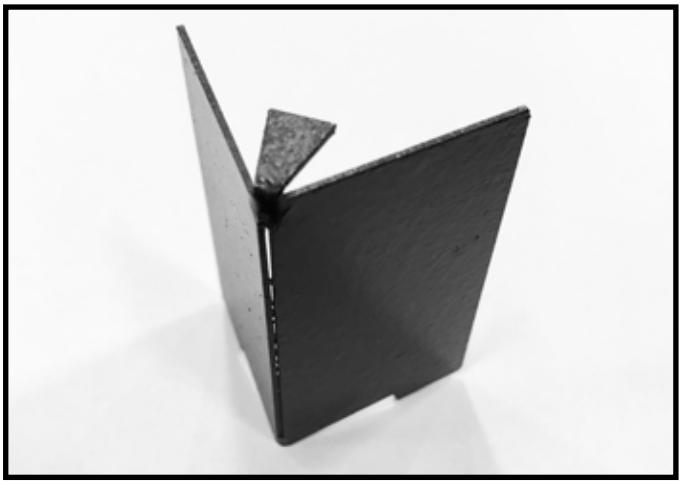

Figure 5.23 Insert Center Finishing Trim Piece

18. Bend the edge of the left and right side trim pieces over for a reference on where to cut the drywall. See Figure 5.24.
19. Install collar to bottom side of each plenum using hurricane screws provided in the kit. See Figure 5.25.

Note: The PHFR-MCE-60 and PHFR-MCE-72 require two collars per plenum.

Figure 5.24 Bend Side Trim Piece

Figure 5.25 Install Collar(s) to Bottom of Plenum

***WARNING! Risk of Fire! DO NOT** fold/kink/pinch/obstruct 6 inch flexible ducts. Overheating of appliance and combustible materials will occur.*

20. Cut flex venting to appropriate length to run from top of appliance to the bottom of the plenum. Ensure there are no kinks. See Figure 5.26 and Figure 5.27.
21. Secure flex venting to collars on both the appliance and the bottom of the plenum using the provided gear clamps. See Figure 5.27 and Figure 5.29.

Figure 5.26 Install Flex Venting to Collar on Bottom of Plenums

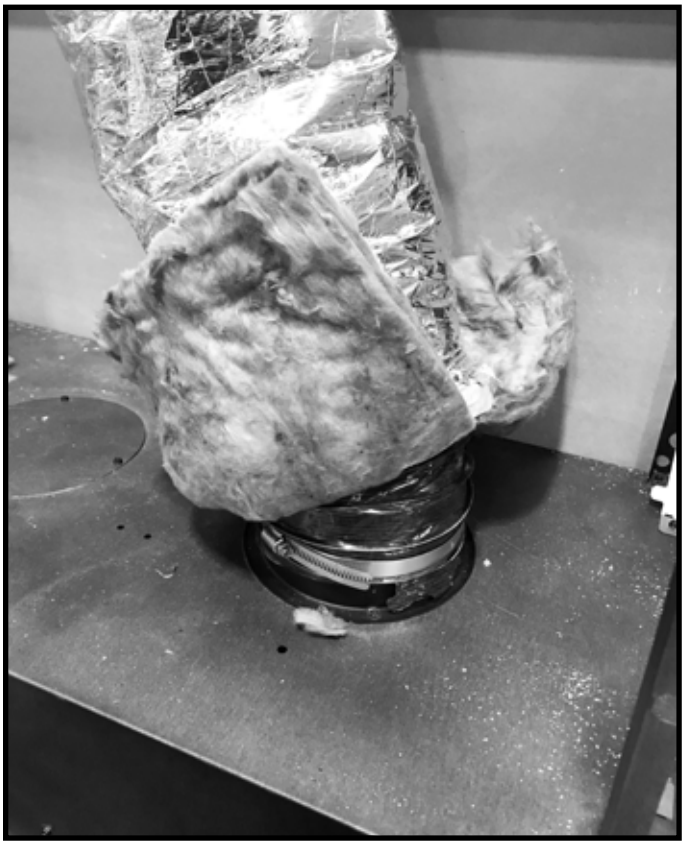

Figure 5.27 Install Flex Venting to Appliance

22. Install self-tapping screw through gear clamp into collar. Repeat for all collars. See Figure 5.28

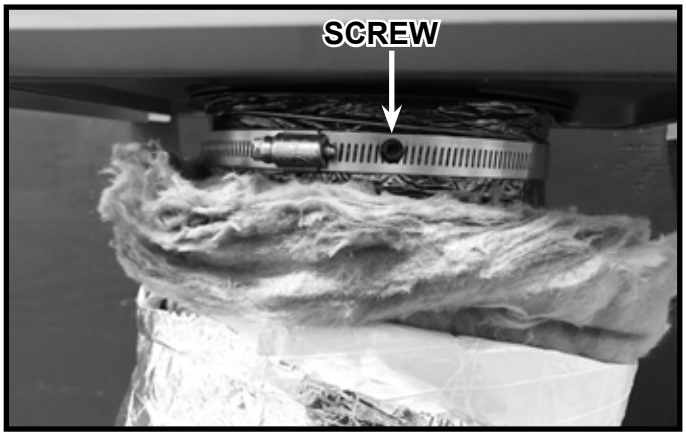

Figure 5.28 Install Screw into Collar

Figure 5.29 Flex Vent Installed with No Kinks

Finishing

1. Apply wall sheathing material, such as drywall up to 1/2 in. (13mm) thick up to the edge of the plenum. See Figure 5.30.

***WARNING! Risk of Overheating! DO NOT** apply wall sheathing past the edge of the plenum. Overheating of appliance and combustible materials will occur.*

***WARNING! Risk of Fire!** DO NOT block passive heat registers! Overheating of appliance and combustible materials will occur.*

2. **Facing Material with Front Trim Kit (PH-FRTTRIM-D)**
   The passive heat kit trim kit is designed to be mounted directly to the drywall surface. Additional facing materials must not be placed behind the trim kit. It is acceptable to place Non-Combustible facing materials up to the edge of the trim kit. See Figure 5.31 and Figure 5.32. Consult the appliance Installation Manual to determine maximum facing material thickness.

3. Install the required trim kit (PH-FRTTRIM-D) as instructed to complete the installation.

4. Install trim kit (PH-FRTTRIM-D) as instructed.

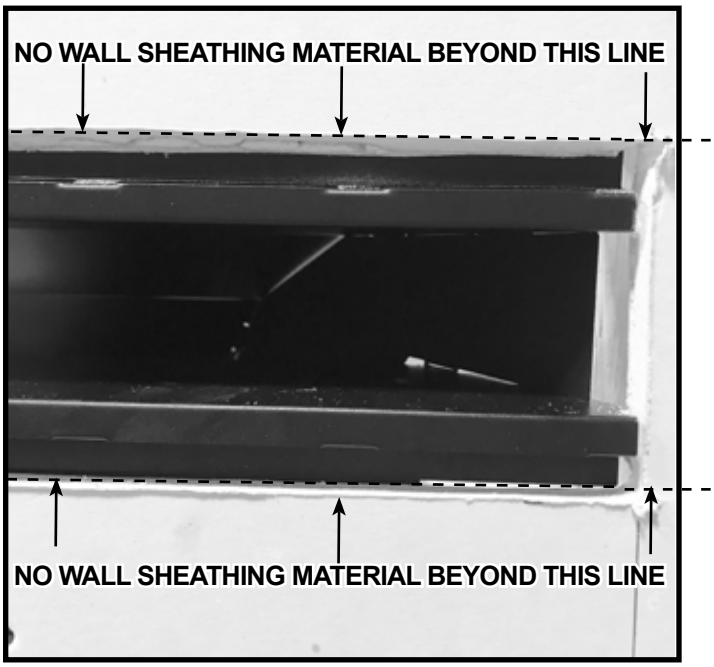

Figure 5.30 Wall Sheathing Installed

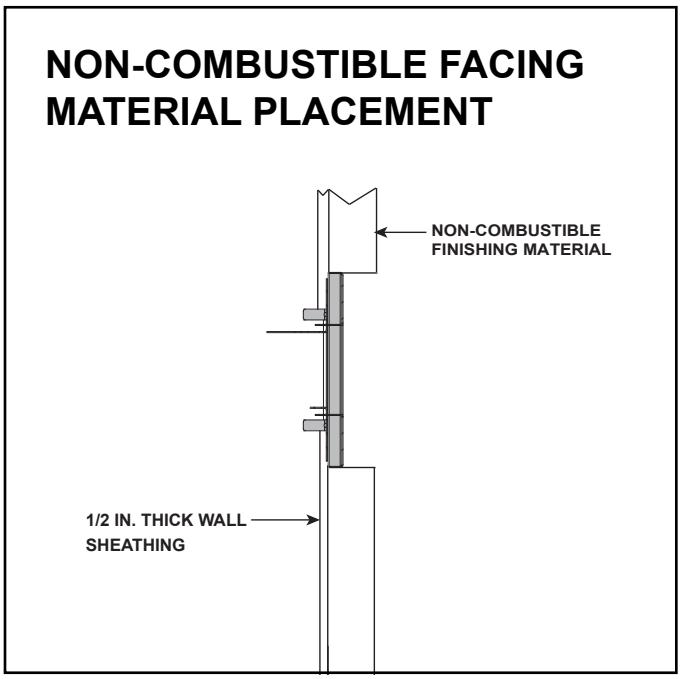

Figure 5.31 Finishing Material Installed

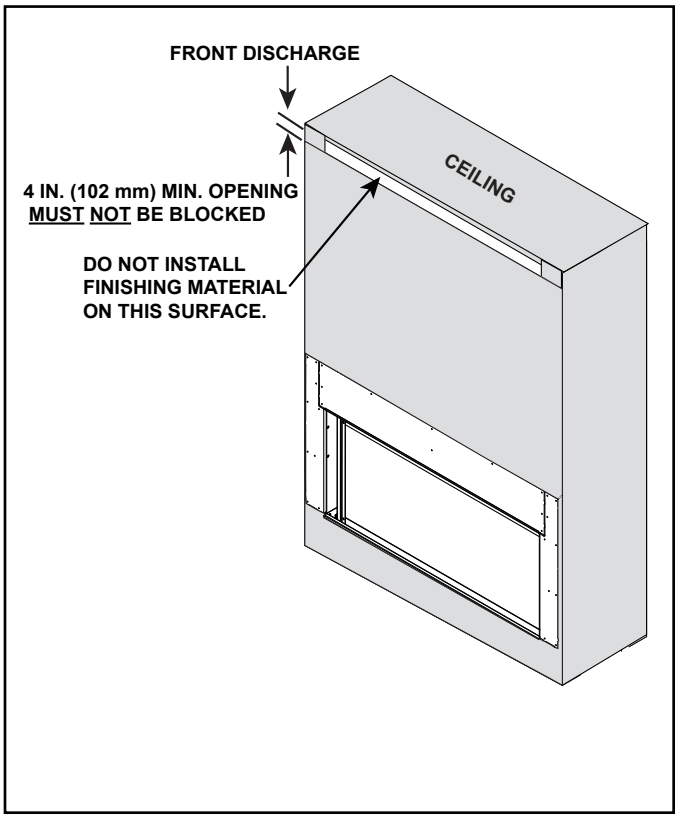

Figure 5.32 Finishing Material Installed

Painting

Front Discharge:

The location of the Passive Heat discharge opening could allow for venting and other construction materials to be visible. It is acceptable to paint the vent pipe and other construction materials using a high temperature paint with a minimum of 300 °F (149 °C) continuous exposure rating. Hearth & Home Technologies recommends using black touch up paint (part number TUP-GBK-12) available from your Hearth & Home Technologies dealer.

6. Maintenance

Service and maintain the gas fireplace per instructions included with the appliance. Keep the air register(s) clean and free of any blockage.

Please contact your Hearth & Home Technologies dealer with any questions or concerns.
For the location of your nearest Hearth & Home Technologies dealer,
please visit www.hearthnhome.com.

Hearth & Home Technologies
7571 215th Street West, Lakeville, MN 55044
www.hearthnhome.com