This product utilizes **R-454B** *refrigerant*

MRCOOL®
Signature Series
TruInverter™
Split System Heat Pump

INSTALLATION & OWNER'S MANUAL

MODELS:

MCAESHV*T*21BA



Read this manual carefully before installation and keep it where the operator can easily find it for future reference.

Due to updates and constantly improving performance, the information and instructions within this manual are subject to change without notice.

Version Date: February 12, 2026

Please visit www.mrcool.com/documentation to ensure you have the latest version of this manual.

MRCOOL®
COMFORT MADE SIMPLE

CONTENTS

1 SAFETY 2
2 UNIT OVERVIEW 8
2.1 Nomenclature 8
2.2 Suggested Tools 9
2.3 Inspection 9
2.4 Unit Size 9
2.5 Location Restrictions 10
2.6 Refrigerant Charge & Room Area Limitations 11
3 Installation 15
3.1 Refrigerant Line 15
3.2 Refrigerant Line Routing 17
3.3 Refrigerant Line Connection 18
3.4 Leakage Check 20
3.5 Evacuation 20
3.6 Open the Service Valves 21
3.7 Low Voltage Connections 21
3.8 High Voltage Connections 23
3.9 System Startup 25
4 POST-INSTALLATION 26
4.1 System Display 26
4.2 Error Codes 27
4.3 Components 28
4.4 Troubleshooting 29
4.5 Schematic 31



This marking indicates that this product should not be disposed with other household wastes throughout North America. To prevent possible harm to the environment or human health from uncontrolled waste disposal, recycle it responsibly to promote the sustainable reuse of material resources. To return your used device, please use the return and collection systems or contact the retailer where the product was purchased. They can take this product for environmental safe recycling.

Safety Precautions

Read Before Using

Incorrect usage may cause serious damage or injury.

The symbols below are used throughout this manual to indicate instructions that should be followed closely or actions that should be avoided to prevent death, injury, and/or property damage.

WARNING	Indicates the possibility of personal injury or loss of life.
CAUTION	Indicates the possibility of property damage or serious consequences.

WARNING FOR PRODUCT INSTALLATION

1. Read the manual fully before installing or using the system.
2. During the installation of the condenser and air handler, no children should be around the systems as accidents can occur.
3. Ensure that the base of the condenser is firmly fixed to installation site.
4. Check that non-condensables can enter the refrigerant system and check for refrigerant leaks before operation.
5. Run a test cycle after installation and record the operating data.
6. Protect the unit with a suitable fuse for the maximum input current or with a similar overload protection device.
7. Ensure that the main voltage corresponds to what is stamped on the rating plate.
8. The system must be equipped with devices capable of disconnection from the main power supply, have a contact separation in all poles to provide full disconnection under "overvoltage category III conditions", these devices must also be incorporated into the fixed wiring in accordance with the wiring rules.
9. The air conditioner must be installed by professionals or qualified personnel.
10. Do not install the appliance at a distance of less than 19.7in(50 cm) from flammable substances (alcohol, etc.) or from pressurized containers (spray cans, etc.).
11. If the appliance is used in areas without ventilation, precautions must be taken to prevent any leaks of refrigerant from remaining in the environment and fire hazard.
12. The packaging materials are recyclable and should be disposed of in separate waste bins. If disposing of the system, contact qualified personnel to uninstall and take to a special water center for disposal.
13. Only use the system as instructed in this manual. These instructions are not intended to cover every possible condition and situation. As with any electrical household appliance, common sense and caution is recommended for installation, operation, and maintenance.
14. This system must be installed in accordance with national and local regulations.
15. Before accessing the terminals, circuits must be disconnected from the power supply.
16. The system can be used by children 8 years or older and persons with reduced physical, sensory or mental capabilities, or those who lack experience/knowledge, if they are given supervision or instruction concerning the use of the appliance in a safe way and understand the hazards involved. Children should not play with the system. Cleaning and user maintenance should not be performed by children without proper supervision.
17. Cleaning and maintenance must be carried out by specialized technical personnel. Always disconnect the system from the main power supply before carrying out any cleaning or maintenance.
18. This system is designed for use in domestic environments and may not be used for any other purpose, such as for drying clothes, cooling food, etc.
19. Always use the system with an air filter. Running the system without an air filter can cause an excessive amount of dust/debris and lead to component failure.

WARNING FOR INSTALLATION CONT.

20. The owner of the system is responsible for having the appliance installed by qualified personnel, who must check earthing/grounding is completed in accordance with national and local codes, and install a proper disconnect and breaker.
21. Do not remain directly exposed to the flow of cool air for a prolonged period. Direct and prolonged exposure to cool air can be dangerous to your health. Care should be taken in rooms where there are children, elderly, or sick persons.
22. If the system gives off smoke or there is a burning smell, immediately cut off the power supply and contact an HVAC service company to inspect the system. Prolonged use of the device in such conditions can cause a fire or electrocution.
23. Repairs must be carried out by an authorized personnel as any incorrect repairs can expose an unexperienced person to multiple hazards.
24. Turn the system off at the breaker if you intend to not use the system for a prolonged period of time or for cleaning/maintenance.

SAFETY RULES & PROHIBITIONS:

- Do not use extensions or gang modules.
- Do not touch the appliance when barefoot or if parts of the body are wet/damp.
- Do not obstruct the air inlet or outlet of the air handler or condenser. Obstruction of these openings can cause a reduction in the efficiency of the system or possible failures/damages.
- Do not alter the characteristics of the system.
- Do not install the appliance in environments where the air can contain flammable gases, oil, sulphuric, or near sources of heat.
- Do not climb on or place heavy or hot objects on top of the system.
- Do not leave windows or doors open while the system is operating.
- Do not direct airflow onto plants or animals.
- Do not put the system in contact with water, this can cause electric shock.
- Do not insert anything into the system as this can cause injury or damage to the system.
- This unit is equipped with a refrigerant leak detector for safety. To be effective, the unit must be electrically powered at all times after installation, other than when servicing.
- This refrigerant sensor can only be replaced with a sensor approved by MRCOOL®. If the sensor is replaced only as part of the component assembly, the component should be labeled.
- The system shall be installed according to MRCOOL®'s instructions.

CAUTION

1. Reference information in this manual to find the dimensions of the space needed for proper installation of the system, including the minimum distances allowed compared to adjacent structures.
2. The system should be installed, operated, and stored in a room with a floor area larger than 43ft^2. (4m^2.).
3. The installation of pipework should be kept to a minimum.
4. The pipework should be protected from physical damage, and should not be installed in an unventilated space if the space is less than 43ft^2. (4m^2.).
5. Compliance of national gas regulations should be observed.
6. Mechanical connections should be accessible for maintenance purposes.
7. Follow the instructions in this manual for handling, installing, cleaning, maintaining, and disposal of refrigerant.
8. Make sure ventilation openings are clear of obstructions.
9. The system should be stored in a room without open flames (ex.operating gas appliances) and ignition sources (ex.operating electric heaters).
10. The system must be stored in a way to prevent mechanical damage from occurring.
11. It is necessary that anyone who is working on a refrigerant circuit holds a valid and up-to-date certification from an assessment authority accredited by the industry that recognizes their competence to handle refrigerants, in accordance with the assessment specification recognized in the industrial sector concerned. Service operations should only be carried out in accordance with the recommendations of MRCOOL®.

! CAUTION CONT.

12. Every working procedure that affects safety means should only be completed by competent personnel.

13. Warning:

- Do not use any means to accelerate the defrosting process or clean the frost on your own. Follow the recommended guidelines from MRCOOL®.
- The system should be stored in a room without continuously operating ignition sources (ex. open flames, operating gas appliances, or an operating electric heater).
- Do not pierce or burn.
- Be aware that refrigerants may not contain an odor.

14. Information on Servicing:

1) Checks to the area:
Prior to beginning work on systems containing flammable refrigerants, safety checks are necessary to ensure that the risk of ignition is minimized. For refrigeration system repair, the following precautions should be taken prior to conducting work on the system.

2) Work Procedure:
Work should be performed under a controlled procedure to minimize the risk of flammable gas or vapor being present while work is performed.

3) General Work Area:
All maintenance staff and others working in the area should be instructed on the nature of the work being performed. Work in confined spaced should be avoided. The area around the workspace should be sectioned off. Ensure that the conditions within the area have been made safe by controlled flammable material.

4) Checking for the Presence of Refrigerant:
The area should be checked with an appropriate refrigerant detector prior to and during work to ensure that the technician is aware of a potential flammable atmospheres. Ensure the leak detection equipment being used is suitable for use with flammable refrigerants, i.e. non-sparking, adequately sealed, or intrinsically safe.

5) Presence of a Fire Extinguisher:
If any hot work is to be conducted on the refrigeration equipment or any associated parts, appropriate fire extinguishing equipment should be available. Have a dry powder or CO2 fire extinguisher adjacent to the charging area.

6) No Ignition Sources:
No personnel carrying out work in relation to a refrigeration system which involves exposing any pipe work should use any sources of ignition in such a manner that it may lead to the risk of fire or explosion. All possible ignition sources, including cigarette smoking, should be kept sufficiently far away from the site of installation, repair, removal/disposal, during which refrigerant can possibly be released to the surrounding space. Prior to work taking place, the area around the equipment is to be surveyed to make sure that there are no flammable hazards or ignition risks. "No Smoking" signs should be displayed.

7) Ventilated Area:
Ensure that the area is in the open or that it is adequately ventilated before breaking into the system or conducting any work that will produce heat. A degree of ventilation should continue during the period that the work is carried out. The ventilation should safely disperse any released refrigerant and preferably expel it externally into the atmosphere.

8) Check to the Refrigeration Equipment:
Where electrical components are being changed, they should be fit for the purpose and to the correct specification. At all times the manufacturer's maintenance and service guidelines should be followed. If in doubt, consult MRCOOL® customer service at 270-366-0457 or at support@mrcool.com.
The following checks should be applied to the installation when using flammable refrigerants;
-- The charge size complies with the room size where the refrigerant-containing parts are installed;
-- The ventilation of machinery and outlets are operating adequately and are not obstructed;
-- If an indirect refrigerating circuit is being used, the secondary circuit should be checked for the presence of refrigerant;

! CAUTION CONT.

--Markings to the equipment should be visible and legible. Markings and signs that are illegible should be corrected.

-- Refrigeration pipe or components are installed in a position where they are unlikely to be exposed to any substance which may corrode refrigerant containing components, unless the components are constructed of materials which are inherently resistant to being corroded or suitably protected against corrosion.

9) Checks to Electrical Devices:

Repair and maintenance to electrical components should include safety checks and component inspection procedures. If a fault exists that could compromise safety, then no electrical supply should be connected to the circuit until the fault is corrected. If the fault cannot be corrected immediately but it is necessary to continue operation, an adequate temporary solution should be used. This needs to be reported to the owner of the equipment so all parties are advised.

Initial safety checks include:

-- Capacitors are discharged: this needs to be done in a safe manner to avoid the possibility of sparking;

-- That no live electrical components or wiring is exposed while charging, recovering, or purging the system;

-- There is continuity of earth bonding.

10) Repairs to Sealed Components:

Sealed electrical components should be replaced.

11) Repairs to Intrinsically Safe Components:

Intrinsically safe components should be replaced.

12) Cabling:

Check that the cabling will not be subject to wear, corrosion, excessive pressure, vibration, sharp edges, or any other adverse environmental effects. The check should also take into account the effects of aging or continual vibration from compressors or fans.

13) Detection of Flammable Refrigerants:

Under no circumstances should potential sources of ignition be used in the searching for or detection of refrigerants leaks. A halide torch (or any other detector using a naked flame) should not be used.

14) Leak Detection Methods:

The following leak detection methods are deemed acceptable for systems containing flammable refrigerants.

Electronic leak detectors should be used to detect flammable refrigerants, but the sensitivity may not be adequate or may need recalibration. (Detection equipment should be calibrated in a refrigerant-free area). Ensure that the detector is not a potential source of ignition and is suitable for the refrigerant used. Leak detection equipment should be set at a percentage of the LFL of the refrigerant and should be calibrated to the refrigerant employed until the appropriate percentage of gas (25% maximum) is confirmed. Leak detection fluids are suitable for use with most refrigerants but the use of detergents containing chlorine should be avoided as the chlorine may react with the refrigerant and corrode the copper pipework. If a leak is suspected, all naked flames should be removed/extinguished. If a refrigerant of leak is found which requires brazing, all of the refrigerant should be recovered from the system, or isolated (by means of shut off valves) in a part of the system remote from the leak. Oxygen free nitrogen (OFN) should be purged through the system both before and during the brazing process.

15) Removal & Evacuation:

When breaking into the refrigerant circuit to make repairs or for any other purpose conventional procedures should be used. However, it is important that best practice is used since flammability is a concern. The following procedure should be adhered to:

-- Remove refrigerant;

-- Purge the circuit with inert gas;

-- Evacuate;

-- Purge again with inert gas;

-- Open the circuit by cutting or brazing.

The refrigerant charge has to be recovered into the correct recovery cylinders. The system should be flushed with OFN to render the unit safe. This process may need to be repeated several times.

! CAUTION CONT.

Compressed air or oxygen should not be used for this task.
Flushing should be achieved by breaking the vacuum in the system with OFN and continuing to fill until the working pressure is achieved, then venting to the atmosphere, and finally pulling down to a vacuum. This process should be repeated until no refrigerant is within the system. When the final OFN charge is used, the system should be vented down to atmospheric pressure to enable work to take place. This operation is vital if brazing operations on the pipe-work are to take place.
Ensure that the outlet for the vacuum pump is not near any ignition sources and ventilation is adequate.

16) Decommissioning:
Before carrying out this procedure, it is essential that the technician is completely familiar with the equipment and all its detail. It is recommended good practice that all refrigerant is recovered safely. Before the task is carried out, an oil and refrigerant sample should be taken in case analysis is required prior to reusing reclaimed refrigerant. It is essential that electrical power is available before the task is completed.
1) Become familiar with the equipment and its operation.
2) Isolate the system electrically.
3) Before attempting the procedure, ensure that:
- mechanical handling equipment is available, if required, for handling refrigerant cylinders;
- all personal protective equipment is available and being used correctly;
- the recovery process is supervised at all times by a competent person;
- recovery equipment and cylinders conform to the appropriate standards.

4) Pump down refrigerant into the system if possible.
5) If a vacuum is not possible, make a manifold so the refrigerant can be removed from various parts of the system.
6) Make sure that the cylinder is properly situated on the scales before recovery takes place.
7) Start the recovery machine and operate in accordance with MRCOOL®'s instructions.
8) Do not overfill cylinders. (No more than 80% volume liquid charge).
9) Do not exceed the maximum working pressure of the cylinder, even temporarily.
10) When the cylinders have been filled correctly and the process completed, make sure that the cylinders and the equipment are removed from the site promptly and all isolation valves on the equipment are closed off.
11) Recovered refrigerant should not be charged into another refrigeration system unless it has been cleaned and checked.

17) Labeling:
Equipment should be labeled stating it has been decommissioned and emptied of refrigerant. The label should be dated and signed. Ensure there are labels on the equipment stating the equipment contains flammable refrigerant.

18) Recovery:
When removing refrigerant from a system, either for servicing or decommissioning, it is recommended good practice that all refrigerants are removed safely.
When transferring refrigerant into cylinders, ensure that only appropriate refrigerant recovery cylinders are employed. Ensure that the correct number of cylinders for holding the total system charge are available. All cylinders to be used are designated for the recovered refrigerant and labeled for that refrigerant (i.e.special cylinders for the recovery of refrigerant). Cylinders should be complete with a pressure-relief valve and associated shut-off valves in good working order.
Empty recovery cylinders are evacuated and, if possible, cooled before recovery occurs. The recovery equipment should be in good working order with a set of instructions concerning the equipment that is available and suitable for the recovery of all refrigerants including, when applicable, flammable refrigerants. In addition, a set of calibrated weighing scales should be available and in good working order. Hoses should be complete with leak-free disconnect couplings and in good condition. Before using the recovery machine, check that it is in satisfactory working order, has been properly maintained, and that any associated electrical components are sealed to prevent ignition in the event of a refrigerant release. Consult MRCOOL® if in doubt.

! CAUTION CONT.

The recovered refrigerant should be returned to the refrigerant supplier in the correct recovery cylinder, and the relevant waste transfer note should be arranged. Do not mix refrigerants in recovery units, and especially cylinders.
If compressors or compressor oils are to be removed, ensure that they have been evacuated to an acceptable level to make certain that flammable refrigerant does not remain within the lubricant.
The evacuation process should be carried out prior to returning the compressor to the suppliers.
Only electric heating to the compressor body should be employed to accelerate this process. When oil is drained from a system, it should be carried out safely.

19) Safety Instructions for Transportation & Storage:
1) No fire source or smoking.
2) According to the local and national rules and laws.

Symbols Displayed on Indoor & Outdoor Unit		
	**DANGER**	This symbol shows that this appliance uses a flammable refrigerant. If the refrigerant is leaked and exposed to an external ignition source, there is a risk of fire.
	**CAUTION**	This symbol shows that the operation manual should be read carefully.
	**CAUTION**	This symbol shows that service personnel should be handling this equipment in reference to the installation manual.
	**CAUTION**	This symbol shows that information is available, such as the operating manual or installation manual.
	**CAUTION**	This symbol shows that when MRCOOL® requires additional charge, record the resulting total refrigerant charge for each refrigerating system.
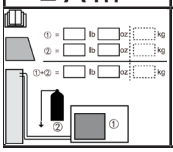	**WARNING**	This symbol shows that the appliance should be installed, operated, and stored in a room with a floor area that is no less than the minimum room area.

Installation Safety Principles:

1. Site Safety



Open Flames Prohibited





Ventilation Necessary

2. Operation Safety



Mind Static Electricity



Must wear protective clothing and anti-static gloves



Do not use a mobile phone

3. Installation Safety:
- Refrigerant Leak Detector
- Appropriate Installation Location

The picture to the right shows a refrigerant leak detector.



Please note that:

1. The installation site should be well-ventilated.
2. The site for installing and maintaining an air conditioner using R-454B should be free from open fire, welding, smoking, ovens, or any other heat source higher than 745°F (396°C), which can easily produce a fire.
3. When installing the system, it is necessary to take appropriate anti-static measures such as wearing anti-static clothing and/or gloves.
4. It is necessary to choose the site most convenient for installation or maintenance wherein the air inlet and outlet of the indoor and outdoor units should not be surrounded by obstacles or close to any heat source or combustible and/or explosive environment.
5. If the air handler has a refrigerant leak during installation, it is necessary to immediately turn off the valve of the outdoor unit and all personnel should leave the space until the refrigerant completely disperses for 15 minutes or more. If the product is damaged, it must be repaired off-site.
6. It is necessary to choose a place where the inlet and outlet of the air handler is level.
7. It is necessary to avoid areas where there are other electrical products, power switches, plugs, sockets, kitchen cabinets, beds, sofas, or other valuables under or on the sides of the air handler.

2.1 Nomenclature

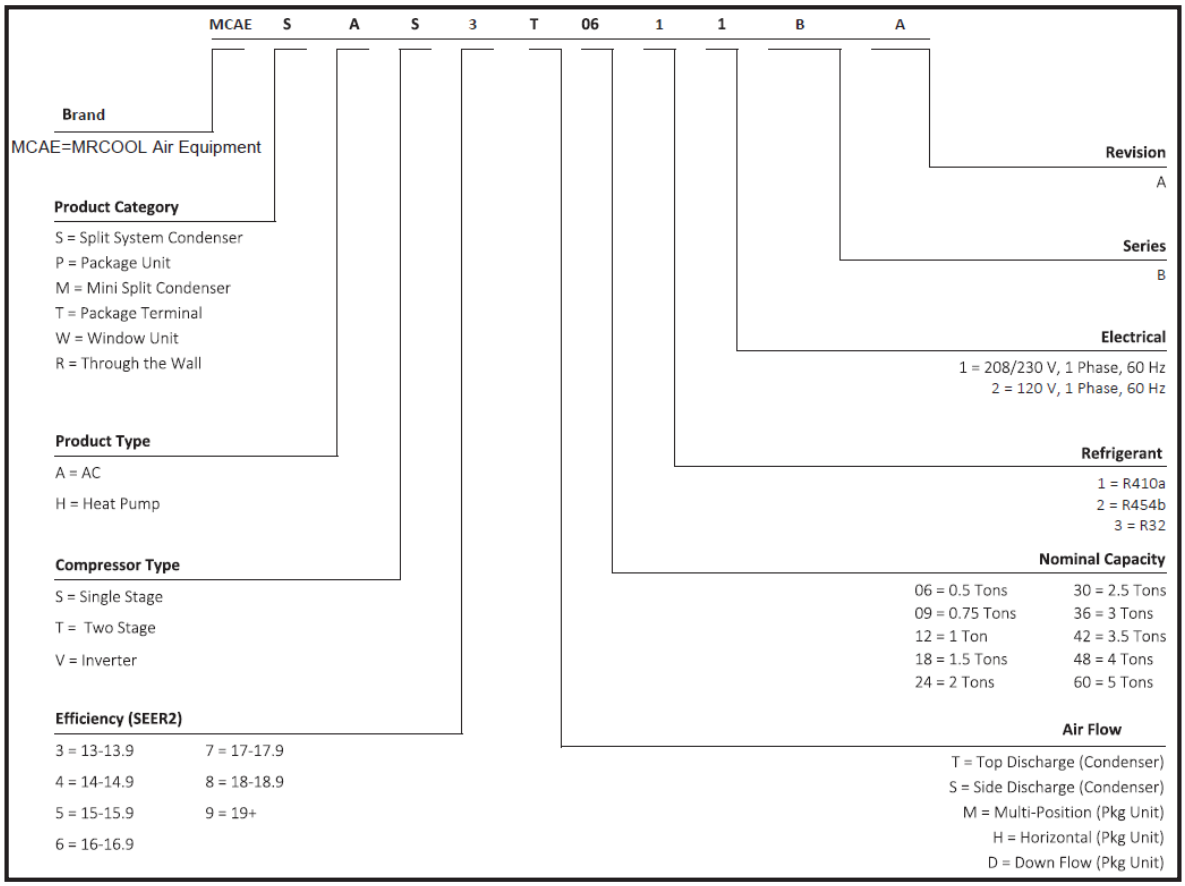

2.2 Suggested Tools

Tool	Picture	Tool	Picture	Tool	Picture
Standard Wrench		Pipe Cutter		Vacuum Pump	
Adjustable/ Crescent Wrench		Screw Drivers (Phillips & Flat)		Safety Glasses	
Torque Wrench		Manifold & Gauges		Anti-Static Gloves	
Hex Keys or Allen Wrenches		Level		Refrigerant Scale	
Drill & Drill Bits		Flaring Tool		Micron Gauge	
Hole Saw		Clamp on Amp Meter		Torch	

2.3 Inspection

The condenser is packaged for shipment to avoid damage during normal transit and handling. It is the receiving party's responsibility to inspect the condenser upon arrival. Any obvious damage to the box should be reported on the bill of lading ,then a claim should be filed with the transportation company, as well as notifying MRCOOL®. All condensers should be stored in the box in a dry location until installation. Carefully remove the packaging and inspect for hidden damage. Any hidden damage should be recorded and MRCOOL® should be notified. The gauge port can be used to ensure the refrigerant charge has been retained during transit.

2.4 Unit Size

When mounting the condenser on the roof or on a pad, be sure that its dimensions are ≥ 29in (73.66 cm) x 29in (73.66 cm).

Unit	H x W x D in (cm)
MCAESHV8T2421BA	24.94 x 29.125 x 29.125 (63.35 x 73.98 x 73.98)
MCAESHV9T3621BA	24.94 x 29.125 x 29.125 (63.35 x 73.98 x 73.98)
MCAESHV8T4821BA	33.81 x 29.125 x 29.125 (85.88 x 73.98 x 73.98)
MCAESHV7T6021BA	33.81 x 29.125 x 29.125 (85.88 x 73.98 x 73.98)

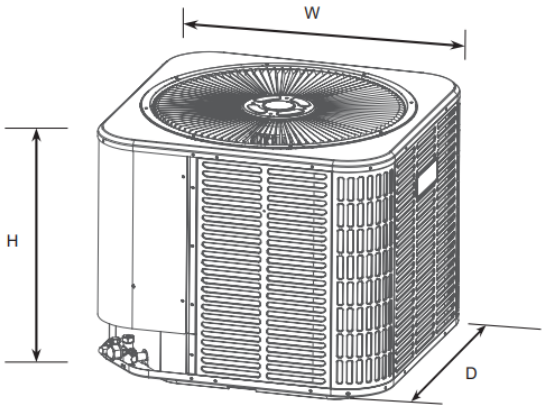

2.5 Location Restrictions

! CAUTION

Exposure to corrosive environments may shorten the lifespan of the system, corrode metal parts, or negatively affect the system's performance. Corrosive elements include, but are not limited to: sodium chloride, sodium hydroxide, sodium sulfate, and other compounds commonly found in ocean water, sulfur, chlorine, fluorine, fertilizers, and various chemical contaminants from industry/manufacturing plants. If the system is installed in areas where it may be exposed to corrosive environments, attention should be given to the system's placement and maintenance.

- Do not have lawn sprinklers/waste water spraying directly onto the system for prolonged periods.
- In coastal areas, install the system on the side of the structure away from the waterfront.

Installation Clearance Requirements:

- Ensure the top of the system's discharge area is unrestricted 60in (152cm) above.
- Do not locate the condenser near bedrooms, as the noise can cause a disturbance.
- Position the condenser in a way that allows adequate space for unobstructed airflow, wiring, refrigerant line set routing, and maintenance.
- Allow a minimum clearance of 12in (30.48cm) on the access panels side to a wall and a minimum of 24in. (60.96cm) on the other side of the access panel.
- Maintain a minimum distance of 24in (30.48cm) Between condensers.

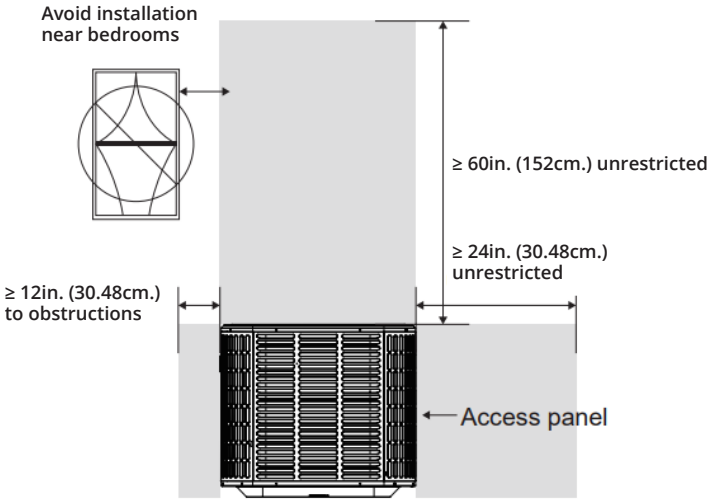

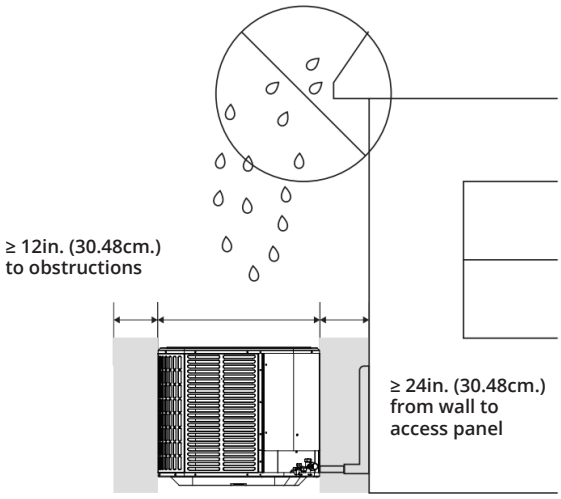

- Position the condenser in an area where water, snow, or ice from roofs or overhangs are not able to fall directly on the condenser.

- Take precautions for condensers installed in areas where snow accumulation and prolonged below freezing temperatures occur.
- Elevate the unit per local climate and code requirements.
- Additional height will allow the condenser to drain snow and ice that is melted during the defrost cycle to flow out prior to it refreezing.
- Installation of a snow drift barrier is recommended to be installed around the condenser to prevent a build-up of snow accumulation.

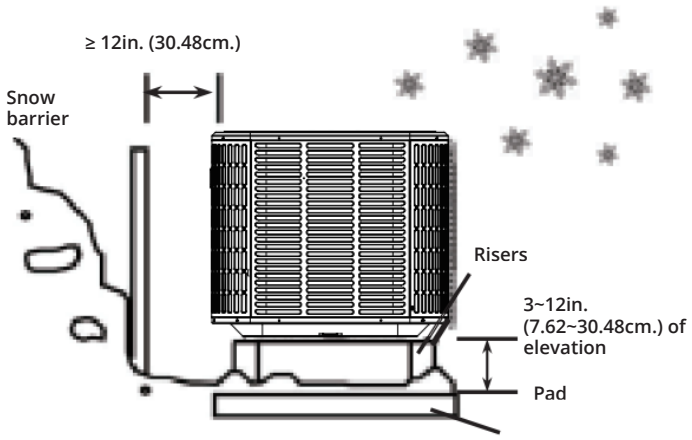

Condenser Position:

- When mounting the condenser on a roof, ensure the roof will support the weight of the condenser, located on the nameplate.
- Proper placement of the condenser is recommended to prevent sound or vibration to the building's structure.

2.6 Refrigerant Charge & Room Area Limitations

- In UL/CSA 60335-2-40, R-454B refrigerant is classified as class A2L, which is mildly flammable. Therefore, R-454B refrigerant will limit the area of the rooms being served by the system.
- Similarly, the total amount of refrigerant in the system should be less than or equal to the allowable maximum refrigerant charge. The allowable maximum refrigerant charge depends on the area of the rooms being served by the system.

NOTE:
The abbreviations in this section are explained as follows:
Mc - the actual refrigerant charge in the system
A - the actual room area where the appliance is installed
Amin - the required minimum room area
Mmax - the allowable maximum refrigerant charge in a room
Qmin - the minimum circulation airflow
Anvmin - the minimum opening area for connected rooms
TAmin - the required minimum total area of the conditioned space (for units serving two or more rooms with an air duct system)
TA - the total area of the conditioned space connected by air ducts (for units serving two or more rooms with an air duct system)

Room Area Calculation Requirements

! CAUTION

The space considered should be any space which contains refrigerant-containing parts or into which refrigerant could be released. The room area (A) of the smallest, enclosed, occupied space should be used in the determination of the refrigerant quantity limits.

- For determination of room area (A), when used to calculate the refrigerant charge limit, the following shall apply:
  - The room area (A) shall be defined as the room area enclosed by the projection to the base of the walls, partitions, and doors of the space in which the appliance is installed. Spaced connected by only drop ceilings, ductwork, or similar connections should not be considered a single space.
- Units mounted higher than 70.86in (1.79m), and spaces divided by partition walls that are no higher than 62.98in (1.59m), shall be considered a single space.

- Rooms on the same floor and connected by an open passageway between the spaces can be considered a single room when determining compliance to Amin, if the passageway complies with all of the following:
  1. It is a permanent opening.
  2. It extends to the floor.
  3. It is intended for people to walk through.
- The area of the connected rooms, on the same floor,connected by a permanent opening in the walls and/or doors between occupied spaces, including gaps between the wall and the floor, can be considered a single room when determining compliance to Amin provided all of the following conditions are met, as well as those in the figure.
- **Low Level Opening**
  - The opening shall not be less than Anvmin in the following table.
  - The area of any openings above 11.81in (30cm) from the floor shall not be considered when determining compliance with Anvmin.
  - At least 50% of the opening area of Anvmin shall be below 7.88in (20cm) from the floor.
  - The bottom of the opening is not more than 3.94in (10cm) from the floor.
  - The opening is a permanent opening that cannot be closed.
  - For openings extending to the floor, the height shall not be less than 0.78in (1.98cm) above the surface of the floor covering.
- **High Level Opening**
  - The opening shall not be less than 50% of Anvmin in the following table.
  - The opening is a permanent opening that cannot be closed.
  - The opening shall be at least 59in (1.49m) above the floor.
  - The height of the opening is not less than 0.78in (1.98m).
- **Room Size Requirement**
  - The room into which refrigerant can leak, plus the connected adjacent room(s) shall have a total area no less than Amin. Amin is shown in the following table
  - The room area in which the unit is installed shall be no less than 20% Amin. Amin is shown in the following table on pg. 13.

NOTE: The requirement for the second opening can be met by drop ceilings, ventilation ducts, or similar arrangements that provide an airflow path between the connected rooms.

- The minimum opening for natural ventilation (Anvmin) in connected rooms is related to the room area (A), the actual ventilation (Anvmin) in connected rooms is related to the room area (A), the actual refrigerant charge of refrigerant in the system (Mc), and the allowable maximum refrigerant charge in the system (Mmax), Anvmin can be determined according to the following table on pg 13.

Opening Conditions for Connected Rooms

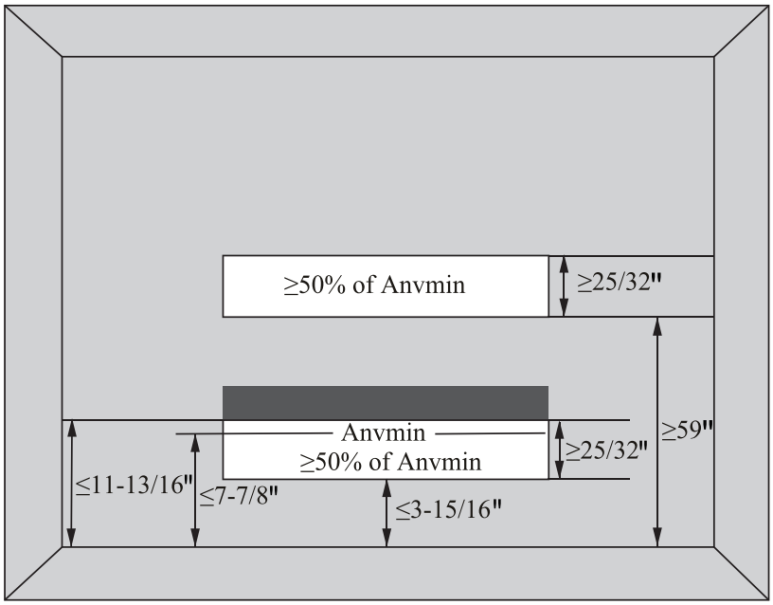

A	Mc		Mmax		Anvmin
ft²	lb	oz	lb	oz	ft²
40	9	9	2	10	0.9
50	9	9	3	5	0.8
60	9	9	4	0	0.7
70	9	9	4	10	0.6
80	9	9	5	5	0.6
90	9	9	6	0	0.5
100	9	9	6	10	0.4
110	9	9	7	5	0.3
120	9	9	8	0	0.2
130	9	9	8	10	0.2
140	9	9	9	5	0.1
150	9	9	10	0	0.0
160	9	9	10	10	0.0

Note: Take the Mc=17lbs. 3oz. as an example.

- For appliances serving two or more rooms with an air duct system, the room area calculation shall be determined based on the total area of the conditioned space (TA) connected by ductwork, taking into consideration the circulating airflow distributed to all the rooms by the unit's integral indoor fan will mix and dilute the leaking refrigerant before entering any room.

Allowed Maximum Refrigerant Charge & Required Minimum Room Area

- If the fan inside the unit is being continuously operated or operation is initiated by a refrigerant detection system with a sufficient circulation airflow rate, the allowable maximum refrigerant charge (Mmax) and the required minimum room area (Amin/TAmin) is shown in the following tables.

Allowable Maximum Refrigerant Charge

A/TA	Mmax		A/TA	Mmax	
ft²	lb	oz	ft²	lb	oz
40	2	10	160	10	10
50	3	5	170	11	5
60	4	0	180	12	0
70	4	10	190	12	10
80	5	5	200	13	5
90	6	0	210	14	0
100	6	10	220	14	10
110	7	5	230	15	5
120	8	0	240	16	0
130	8	10	250	16	10
140	9	5	260	17	5
150	10	0			

Required Minimum Room Area

Mc		Amin/ TAmin	Mc		Amin/ TAmin
lb	oz	ft²	lb	oz	ft²
4	6	66.1	11	0	165.3
4	13	72.7	11	7	171.9
5	4	79.3	11	14	178.5
5	11	86	12	5	185.1
6	2	92.6	12	12	191.7
6	9	99.2	13	3	198.4
7	0	105.8	13	10	205
7	7	112.4	14	1	211.6
7	15	119	14	8	218.2
8	6	125.6	14	15	224.8
8	13	132.2	15	6	231.4
9	4	138.8	15	14	238
9	11	154.5	16	5	244.6
10	2	152.1	16	12	251.2
10	9	157.7	17	3	257.9

Minimum Circulation Airflow

Mc		Qmin	Mc		Qmin
lb	oz	CFM	lb	oz	CFM
4	6	119	11	0	298
4	13	131	11	7	310
5	4	143	11	14	322
5	11	155	12	5	334
6	2	167	12	12	346
6	9	179	13	3	358
7	0	191	13	10	370
7	7	203	14	1	382
7	15	215	14	8	394
8	6	227	14	15	405
8	13	239	15	6	418
9	4	251	15	14	430
9	11	263	16	5	442
10	2	275	16	12	454
10	9	287	17	3	466

! CAUTION

- **The Allowable Maximum Refrigerant Charge** or the **Required Room Area** is only used if the following conditions are met:
- Minimum velocity of 3.28ft/s, which is calculated using the air handlers air flow divided by the nominal face area of the outlet. The grille area should not be deducted.
- The **Minimum Circulation Airflow** rate must correspond with the table, which is related to the actual refrigerant charge of the system (Mc).
- The R-454B refrigerant leakage sensor is configured.
- The maximum refrigerant limit described above applies to unventilated areas. If adding additional measures, such as areas with mechanical ventilation or natural ventilation, the maximum refrigerant charge can be increased or the minimum room area can be reduced. The R-45B refrigerant leakage sensor is configured for the indoor unit, meets the incorporated circulation airflow requirements, the maximum refrigerant charge or minimum room area can be determined according to the tables for the **Allowable Maximum Refrigerant Charge** and the **Required Minimum Room Area**.
- If the actual room area, air outlet height, and refrigerant charge amount are not reflected in the above table, more severe cases need to be reconfigured according to the data from the tables.

3.1 Refrigerant Line

Refrigerant Line Limitations:

- Use only the line set sizes indicated in the table below to determine the required line set length.
- Do not use suction lines other than what is recommended if the line set length is greater than 50ft (15.24m).

Line Sizes & Maximum Length

Model	Suction Line	Liquid Line	Total Equivalent Length ft (m)				
	Dimensions in Inches		25 (7.62)	50 (15.24)	75 (22.86)	100 (30.48)	164 (49.99)
			Maximum Elevation Difference ft (m)				
MCAESHV8T2421BA	3/8	3/4	25 (7.62)	50 (15.24)	45 (13.72)	40 (12.19)	/
MCAESHV9T3621BA	3/8	3/4	25 (7.62)	50 (15.24)	50 (15.24)	40 (12.19)	/
MCAESHV8T4821BA	3/8	7/8	25 (7.62)	50 (15.24)	50 (15.24)	40 (12.19)	35 (10.67)
MCAESHV7T6021BA	3/8	7/8	25 (7.62)	50 (15.24)	50 (15.24)	40 (12.19)	35 (10.67)

Maximum Line Length =___ft (m)

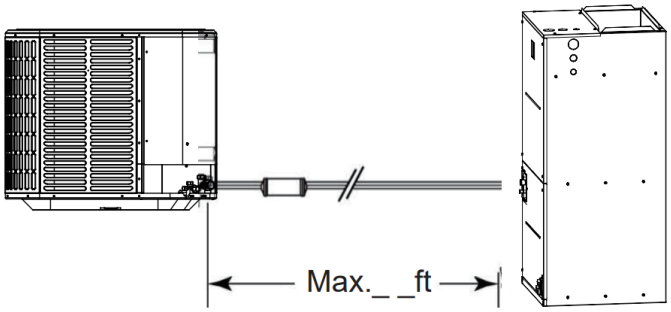

Maximum Elevation Difference =___ft (m)

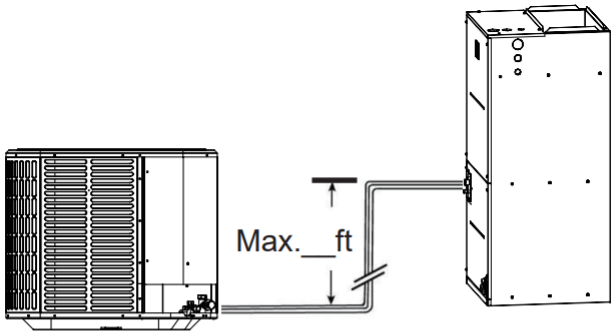

Refrigerant Charge

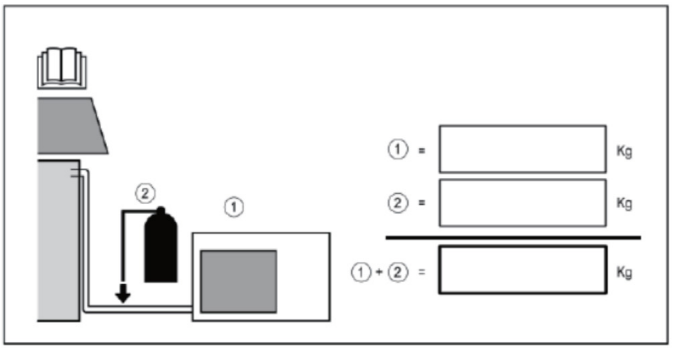

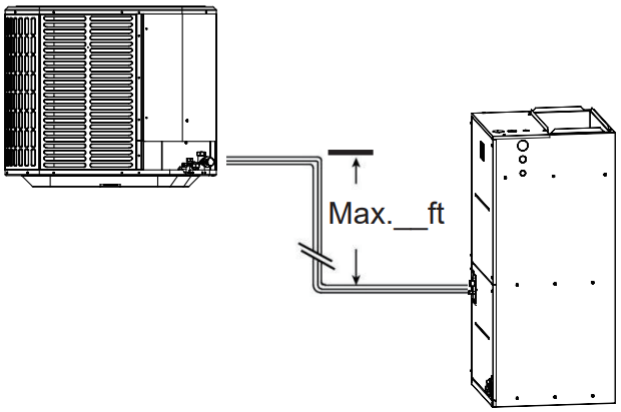

①= Precharged part (see nameplate)
②= Added during install
①+②= Total amount

Piping Length & Additional Refrigerant

Model	MCAESHV8T2421BA	MCAESHV9T3621BA	MCAESHV8T4821BA	MCAESHV7T6021BA
Length of pipe with standard charge ft(m)	25 (7.62)	25 (7.62)	25 (7.62)	25 (7.62)
Refrigerant capacity of standard charge lbs(kg)	4.75 (2.15)	6.28 (2.85)	8.82 (4)	8.82 (4)
Longest pipe length ft(m)	100 (30.48)	100 (30.48)	165 (50.29)	165 (50.29)
Additional refrigerant charge lbs/ft(kg/m)	0.0335 (0.0489)	0.0335 (0.0489)	0.0335 (0.0489)	0.0335 (0.0489)
Max. diff. between the indoor and outdoor unit ft(m)	50 (15.24)	50 (15.24)	50 (15.24)	50 (15.24)

Example: a 36K model has a pipe length of 100ft. (30.48m.), the additional refrigerant charge is (100-25) x 0.0335 = 2.51 lbs. ((30.48-7.62) x 0.0489 = 1.12 kg.). The total refrigerant capacity is 6.28 + 2.51 = 8.97 lbs. (2.85 + 1.12 = 3.97 kg.)

Total Refrigerant Capacity lb (kg)

Model	Category	LFL (lbs/ft^3)	h_0(ft)	Pipe Length ft (m)				
				25 (7.62)	49 (14.94)	66 (20.12)	98 (29.87)	164 (49.99)
MCAESHV8T2421BA	R-454B	0.0185	7.2	4.74 (2.15)	5.57 (2.53)	6.12 (2.78)	7.22 (3.27)	/
MCAESHV9T3621BA				6.28 (2.85)	7.11 (3.23)	7.66 (3.47)	8.76 (3.97)	/
MCAESHV8T4821BA				8.82 (4)	9.65 (4.38)	10.2 (4.63)	11.3 (5.13)	13.5 (6.12)
MCAESHV7T6021BA				8.82 (4)	9.65 (4.38)	10.2 (4.63)	11.3 (5.13)	13.5 (6.12)

Minimum Room Area ft^2 (m^2)

Model	Category	LFL (lbs/ft^3)	h_0(ft)	Pipe Length ft (m)				
				25 (7.62)	49 (14.94)	66 (20.12)	98 (29.87)	164 (49.99)
MCAESHV8T2421BA	R-454B	0.0185	7.2	71 (6.6)	26 (2.42)	28 (2.6)	33 (3.07)	/
MCAESHV9T3621BA				95 (8.83)	32 (2.97)	35 (3.25)	40 (3.72)	/
MCAESHV8T4821BA				40 (3.72)	44 (4.09)	47 (4.37)	52 (4.83)	62 (5.76)
MCAESHV7T6021BA				40 (3.72)	44 (4.09)	47 (4.37)	52 (4.83)	62 (5.76)

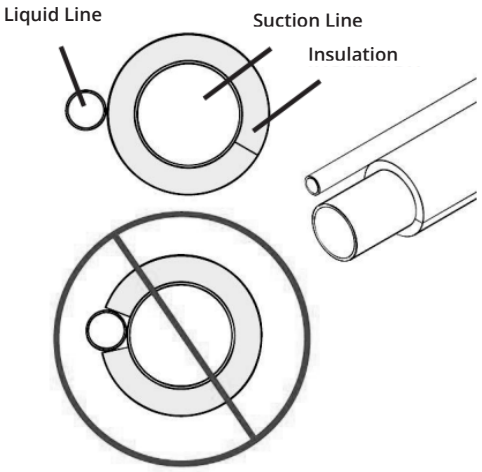

Refrigerant Line Insulation:

- The suction line must always be insulated.
- Do not allow the suction and liquid line to come into direct contact with metal.

Reusing Existing Refrigerant Lines

For applications where the existing refrigerant lines will be used, the following precautions should be taken:

- Ensure the refrigerant lines are the correct size according to the **Line Size & Maximum Length** table.
- It is not recommended to use a suction line that is larger than the standard size as this can result in poor oil return for an inverter compressor.

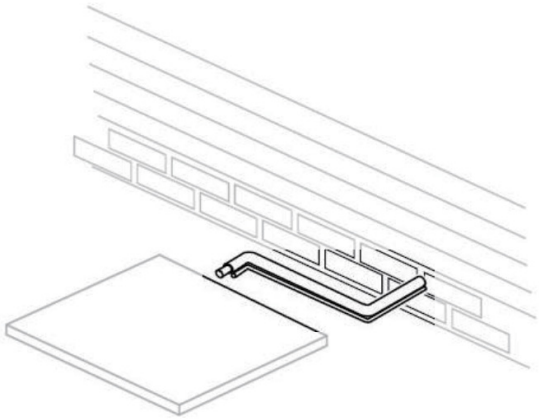

Note:
If using existing refrigerant lines, make sure that all joints are brazed, not soldered.

MRCOOL® recommends that only compatible indoor and outdoor systems should be installed. All split systems are certified by AHRI, the indoor unit is equipped with a piston or TXV, and the model of piston and TXV is selected by MRCOOL®; please do not change those by yourself. The benefits of installing a compatible indoor and outdoor split system are maximum efficiency, best performance, and best overall system reliability.

3.2 Refrigerant Pipeline Routing

Note:
Take preventative measures to prevent excess noise throughout the building casued by refrigerant pipline vibrations. For example:

- When the refrigerant pipeline must be fixed on floor joists or other framework, use isolated hangers.
- When the refrigerant pipeline runs in the column space or closed ceiling, the isolation hanger should also be used.
- When refrigerant lines pass through walls or windowsills, they should be insulated and isolated.
- Isolate the pipeline from all piping systems.
- Try to reduce the number of 90° laps.

Comply with national, state, and local regulations when isolating the wire group from joists, rafters, walls, or other structural elements.

Isolated from beam/rafter:

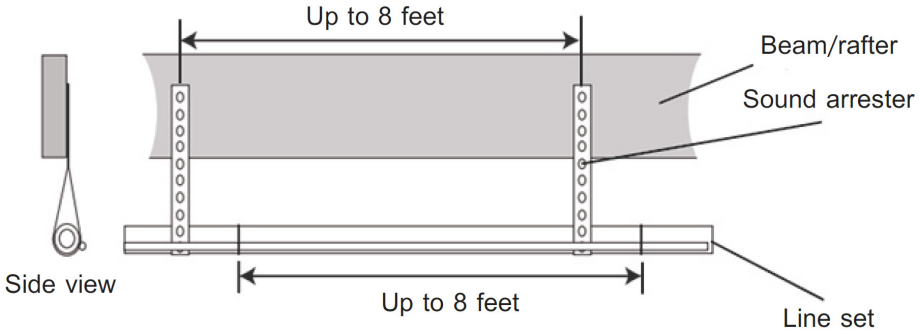

Use isolators to fix the pipes on the beams every 8ft (2.44m). Every 8ft (2.44m), tape, wire, or other suitable methods are used to fix the liquid line directly to the suction line.

Isolated on the wall:

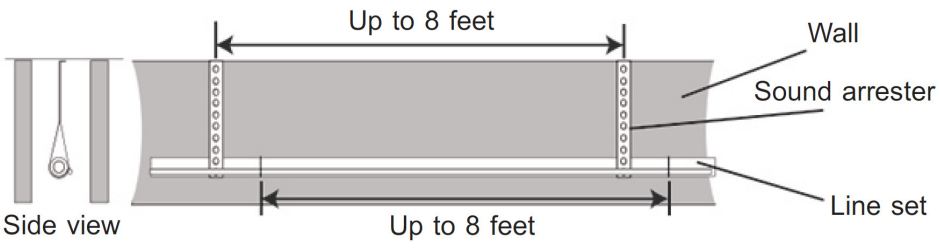

Use isolators to fix the suction line every 8ft (2.44m). Every 8 ft (2.44m), tape, wire, or other suitable methods are used to fix the liquid line directly to the suction line.

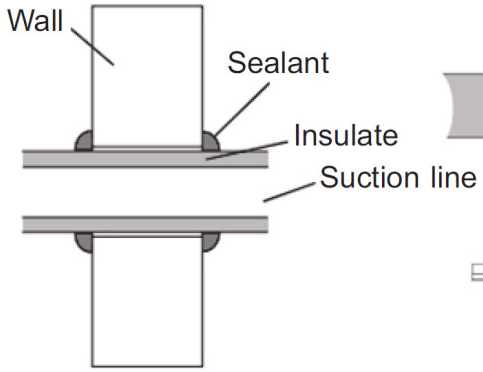

Wall Isolation

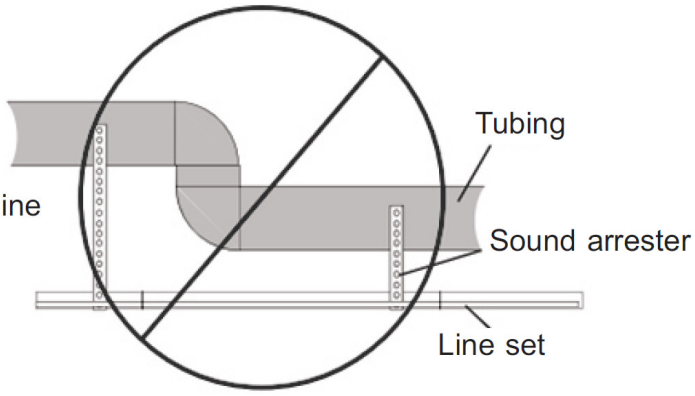

Do not hang the pipeline on the duct work.

3.3 Refrigerant Line Connection

WARNING

- The condenser has been prefilled with refrigerant (check the condenser's nameplate for specific refrigerant amounts).
- Do not use the allen wrench to open the stop valves before ensuring the pipes are connected and verify that there are no non-condensables in the line sets.
- Do not install the line set until the air handler and condenser have been installed. Make sure to insulate the gas and liquid line sets to prevent condensation.
- Take precautions to not damage, dent, or deform the pipe while cutting. This will reduce the heating efficiency of the system.

Cutting Pipes:

When preparing the refrigerant lines, take precautions to cut and flare the piping properly. This will ensure efficient operation and minimize the need for future maintenance.

- Measure the distance between the air handler and condenser.
- Cut the pipes longer than the measured distance.

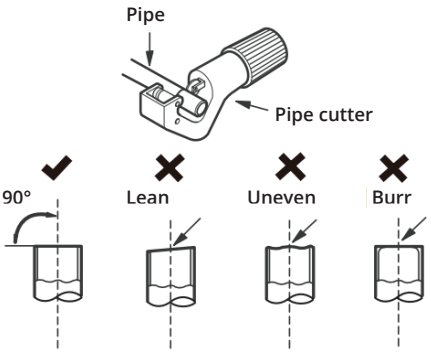

Remove Burrs:

Burrs can affect the seal on the refrigerant lines. Make sure to completely remove them.

- Completely remove all burrs from the cross section of the piping.
- Place the end of the copper lines in a downward position as you remove the burrs to avoid dropping burrs into the tubing.

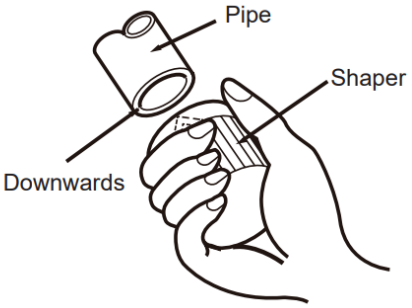

Flaring:

Perform flaring using a flaring tool as shown.

Flaring Dimensions

Outside Diameter in.	A in.
3/8	0.03~0.04
3/4	0.02~0.03
7/8	0.02~0.03

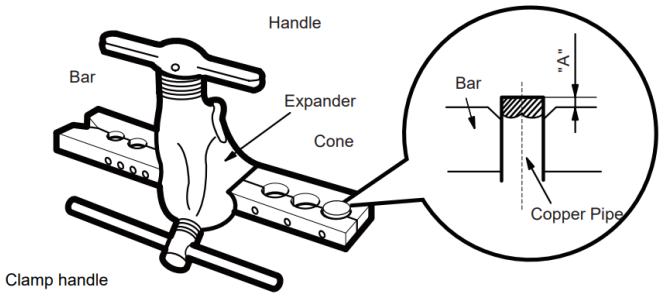

Firmly hold the copper piping in a die using the dimensions shown in the table above.

Checking Work:

- Compare flaring work with the figure shown.
- If the flare is defective, cut off the flared section and repeat.

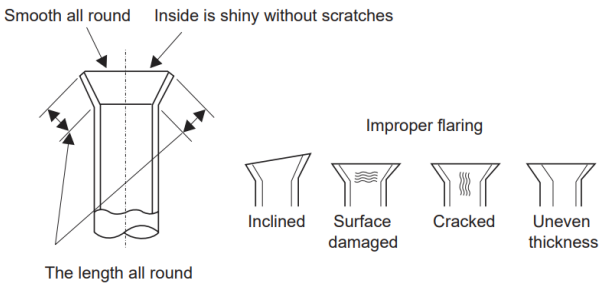

Note:
Connect piping to the air handler first, then connect to the condenser.

Connection:

Connect the suction line first, then the liquid line.

1. Align the center of the two pipes you will be connecting.
2. Tighten the flare nut as tight as possible by hand.
3. Use a wrench and grip the nut on the unit's tubing.

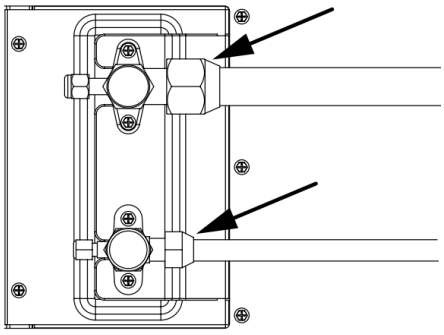

Note:
Use two wrenches to connect the piping with the air handler/condenser to keep the copper from cracking.

4. While firmly gripping the nut, use a torque wrench to tighten the flare nut according to the torque values.
5. Insert the connecting pipe from the air handler into the reamer transfer nozzle flaring of the condenser, and braze the connecting port.
6. Insulate all piping including the gas valve on the condenser.

Torque Values

Connecting Pipe Size (in.)	Torque Values (lbf*in)
3/8	327~372
3/4	620~664
7/8	690~735

! CAUTION

Make sure to wrap insulation around the piping. Direct contact with bare piping may result in burns or frostbite.
Make sure the pipe is properly connected. Over-torquing may damage the bell mouth and under torquing may lead to leaks.
Check to make sure there are no refrigerant leaks after completing pipe installation. If there is a refrigerant leak, ventilate the area immediately and evacuate the system.

3.4 Leakage Check

1. Use dry nitrogen to pressurize the refrigerant line and evaporator coil to 150 PSIG.



2. Use soapy water or foam at each soldering position to check for leaks.

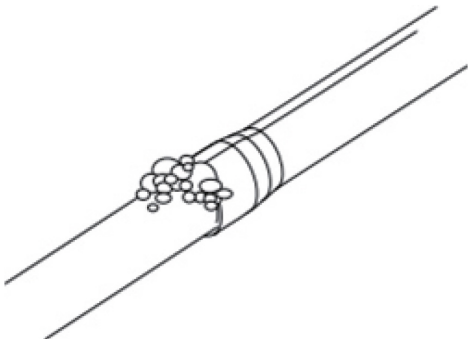

WARNING

- After the completion of field piping for split systems, the field pipework should be pressure tested with an inert gas and then vacuum tested prior to refrigerant charging, according to the following requirements:
  - Entire line set and evaporator coil should hold 600 psig for 1 hour.
  - Field-made refrigerant joints indoors should be tightness-tested. The test method should have a sensitivity of 5g per year of refrigerant or better under a pressure of at least 0.25 times the maximum allowable pressure. No leak should be detected.

3.5 Evacuation

NOTE: Do not open the service valve until the leakage inspection and emptying of refrigerant lines and indoor coils are completed.

1. Evacuate until the micrometer reading is not higher than 350 micrometers, and then close the valve of the vacuum pump.

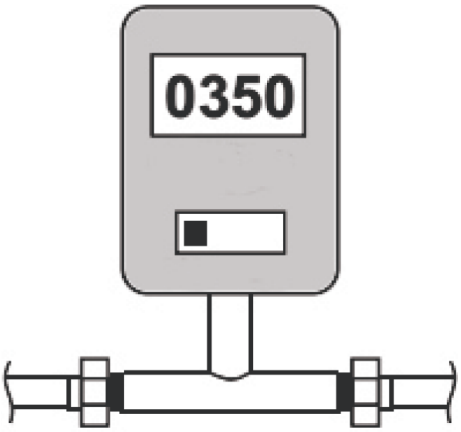

2. Observe the micrometer gauge. If the meter does not rise above 500 micrometers within (1) minute, the evacuation is completed. After the evacuation, turn off the vacuum pump and micrometer, and close the valve on the manifold instrument cluster.



3.6 Open the Service Valve

WARNING

- When opening the liquid side service valve, be extra careful. Turn counterclockwise until the valve stem just touches the hem. No torque is required. Failure to observe this warning will result in a sudden release of system pressure, and may result in personal injury and/or property damage.
- Before opening the service valve, the leakage inspection and emptying must be completed. The valve of copper welded pipe installation should be used for leakage inspection and vacuum pumping. The use of a separate suction port in this process will lead to refrigerant loss.
- Before opening the liquid side service valve, the gas side service valve must be opened first.

1. Remove the valve cover.
2. Insert the hex wrench into the valve stem completely and back out counterclockwise until the valve stem just touches the bead.
3. Replace the valve stem cap to prevent leakage. Tighten it with your fingers and turn it for another 1/6 turn.
4. Repeat steps 1-3 for the liquid side service valve.

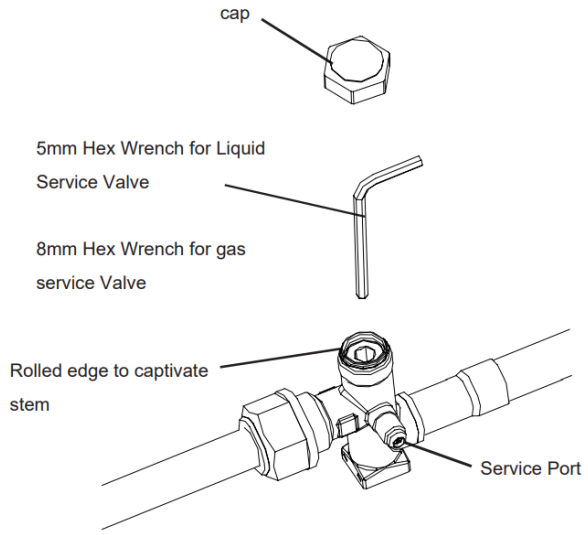

WARNING

- Be cautious when opening the liquid service valve. Turn the valve counterclockwise until the valve touched the rolled edge. No torque is required.
- Failure to follow this will result in abrupt release of the systems charge and may lead to personal injury and/or property damage.

3.7 Low Voltage Electrical Connections

Configure the maximum length of low voltage wiring from the condenser to the air handler, then from the air handler to the thermostat.

Field-installed conduit is required for the low voltage wire entry point. Animals such as frogs, snakes, spiders, etc. may climb into the control box and can damage the PCB.

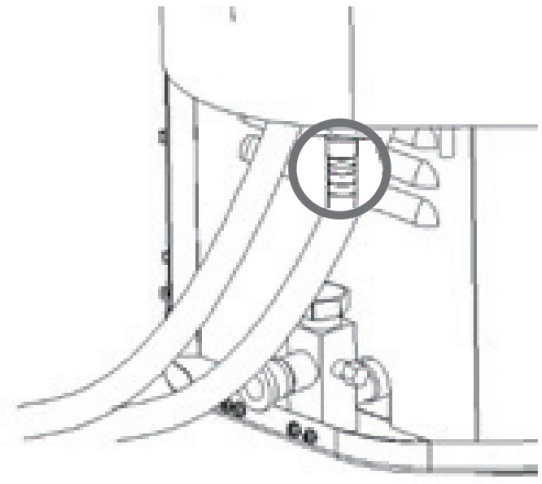

Low Voltage Connection Diagram

Control Wiring	
Wire Size	Max. Wire Length
18 AWG	164ft.

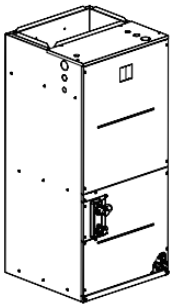

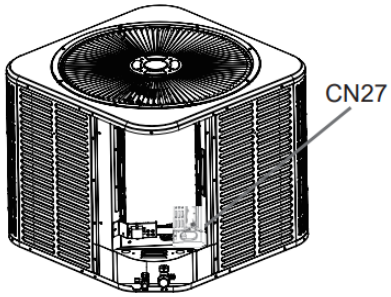

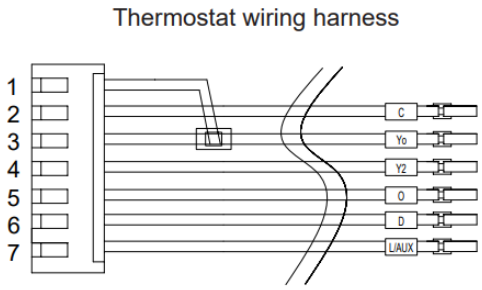

Class 2 low voltage control wiring should not be run in conduit alongside the main power wiring and must be run separately, unless class 1 wire of the proper voltage rating is used.

- Low voltage control wiring should be color-coded 18 AWG.
- Refer to the wiring diagrams attached to the air handler and condenser to be connected.
- Make sure separation between the control wiring and power wiring has been maintained.

Thermostat Wiring Diagram

2 Heat / 2 Cool, Heating Pump

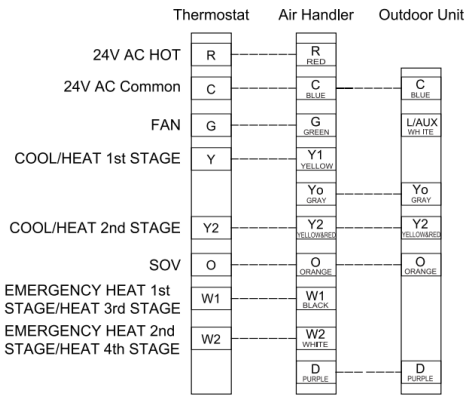

2 Cool / 2 Electric Heat, Cooling Only

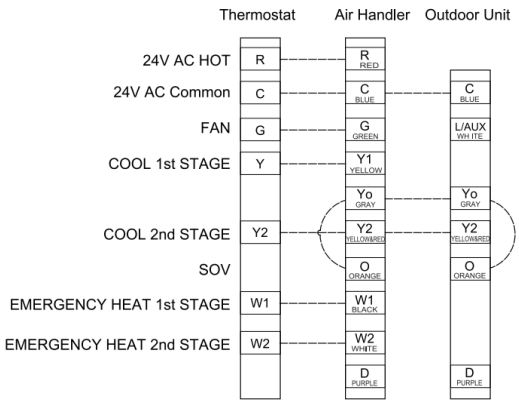

1 Heat / 1 Cool, Heating Pump

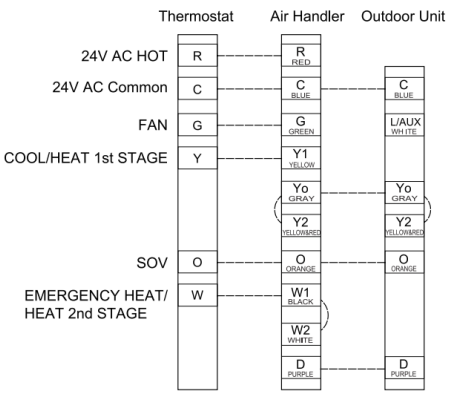

1 Cool, Cooling Only

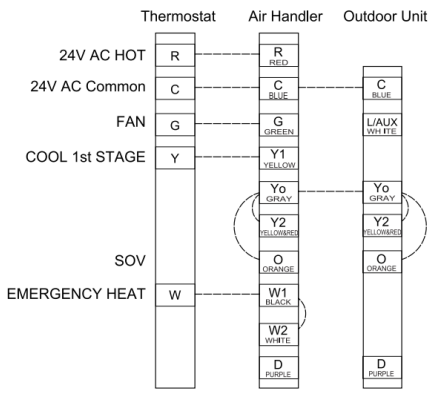

3.8 High Voltage Electrical Connections

Dedicated Distribution Device & Wire For System

Min. Circuit Ampacity of System (A)	Min. Wire Cross-Sectional Area mm²	Specification of Switch (A)	Fuse Specification (A)
≤8	0.75	15	15
>8 and ≤10	1	15	15
>10 and ≤15	1.5	20	25
>15 and ≤24	2.5	25	40
>24 and ≤28	4	35	45
>28 and ≤32	6	40	55

Note:
The table above is only for reference, the installation will need to meet the requirements of local laws and regulations.

WARNING

- During the installation, testing, maintenance, and troubleshooting of this product, it may be necessary to use live electrical parts. Failure to observe all electrical safety precautions when exposed to live electrical parts may result in death or serious injury.
- The high voltage power supply must match the nameplate of the unit (208/230V, 1PH, 60Hz).
- Power supply wiring must comply with national, state, and local regulations.

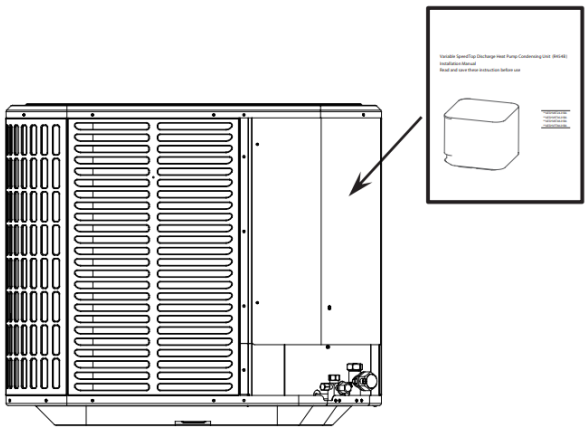

Power Supply			
Model	Voltage	MCA	MOP
MCAESHV8T2421BA	208/230V-1Ph-60Hz	16 A	25 A
MCAESHV9T3621BA		22 A	35 A
MCAESHV8T4821BA		35 A	60 A
MCAESHV7T6021BA		35 A	60 A

Field wiring must comply with the National Electric Code (C.E.C in Canada) and any applicable local ordinance.

WARNING

Disconnect all power to the system before installing or servicing. More than one disconnect switch may be required to de-energize the equipment. Hazardous voltage can cause severe personal injury or death.

Minimum Cross-Sectional Area of Power and Signal Cables

Wiring Material Ampacity	AWG
4	22
7	20
10	18
13	16
18	14
25	12
30	10
40	8
55	6
70	4

The ampacities shown above apply to appliance wiring materials with insulation rated no less than 194°F (90°C).

The supply circuit power wiring must be 167°F (75°C) minimum, copper conductors only.

It is important there is proper power available for connection of the system model that is to be installed.

Refer to the unit's nameplate, wiring diagram, and electrical data.

- Install a branch circuit disconnect of adequate size located within sight of, and readily accessible to, the unit.
- The supply circuit's power wiring must be 167°F (75°) minimum copper conductors. Refer to the electrical data in this section for ampacity, wire size, and circuit protector requirements. Supply circuit protective devices may either be fuses or "HACR" type circuit breakers.

High Voltage Disconnect Switch

Install a separate disconnect switch on the condenser. Field-provided flexible electrical conduit must be used for main power wiring.

In order to retain the warranty on the compressor, it is required that a surge protector be installed to prevent the system from damage caused by abnormal power spikes.

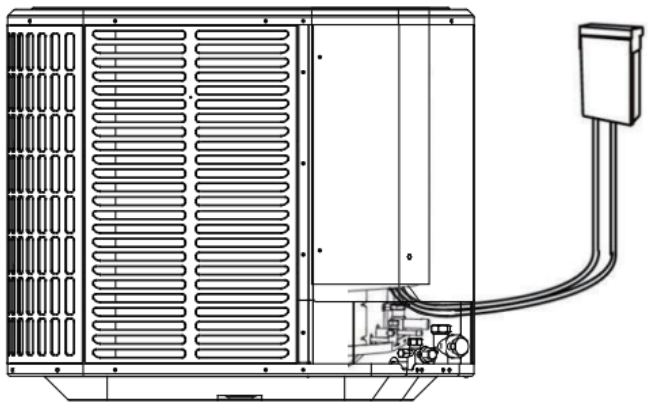

High Voltage Grounding

Ground the outdoor unit according to the requirements of national, state, and local regulations.

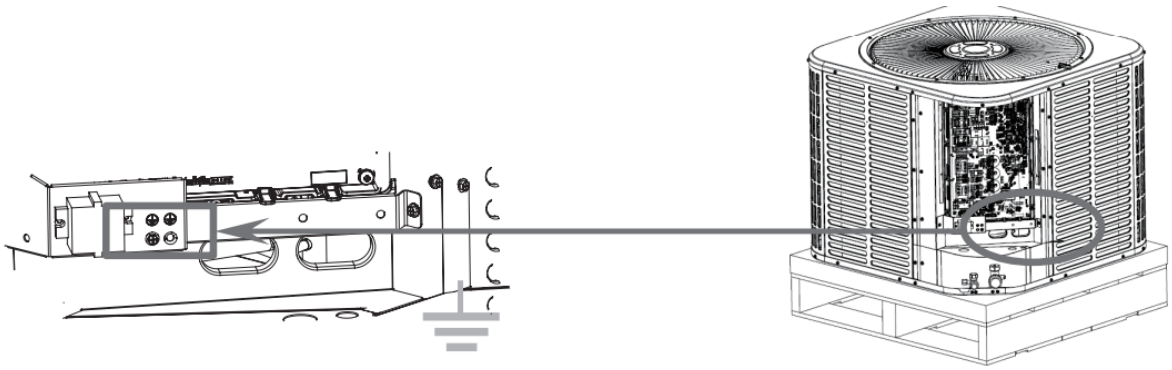

3.9 System Startup

1. Make sure that all previous installation steps have been completed.
2. Set the thermostat to off.
3. Turn on the disconnect switch and turn on the power to the air handler and condenser.
4. Set the thermostat to on.

WARNING

Attempting to use the system in conditions beyond the specified range can cause the systems protection device to trigger and prevent operation. Use only in the following conditions.

Mode/Temperature	Heating	Cooling	Dry
Room Temperature	32°F~30°F (0°C~30°C)	63°F~90°F (17°C~32°C)	
Outdoor Temperature	-5°F~80°F (-20°C~27°C)	5°F~125°F (-15°C~125°C)	

With the power supply connected, restart the system after shutdown, or switch it to a different mode during operation. This will allow the system's protection device to reset and resume operation after 3 minutes.

Heating Operation:

Preheating: When the heating function is enabled, the indoor unit will take 2~5 minutes to preheat. Once the preheating operation is complete, the system will start heating.

Defrosting: During heating operating the condenser will frost and the system will enable an automatic defrosting function to defrost itself. During this cycle, the air handler and condenser fans will cease operation. The system will resume its normal operation automatically once this cycle is complete.

4.1 System Display

Condenser Main PCB LED Display & Fault Table

The LED on the main control board can display the operating status of the condenser.

DSP1-1 DSP1-2 DSP1-3

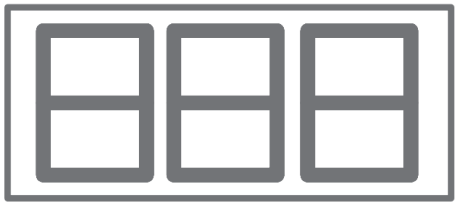

DSP1-1/DSP1-2: Normally blank, but it displays codes accordingly if there is a damaged sensor or command response.

See the fault code table below.

DSP1-3: Displays the outdoor unit's operation mode.

DSP1-3: Displays Condenser's Operation Mode

DSP1-3 Code	Description
0	Standby
1	Ready
2	Cooling
3	Cooling
4	Oil Return Operation
5	Defrosting Operation
6	Forced Defrost
7	Forced Cooling Operation
8	Forced Heating Operation
A	Fault
H	Dehumidification Mode Operation

Dip Switch Settings



SW1 Dip Switch		Description	
No.	Setting Item	Status	Content
SW1-1	Single Cooling/ Heat Pump	On	AC Outdoor Unit
		Digit	HP Outdoor Unit
SW1-2	Operating Capacity	On	Lower Capacity
		Digit	Normal Capacity
SW1-3 SW1-4	Control Mode	On	485 Communication
		Digit	24V On/Off Control

4.2 Error Codes

Error Code	Description
E0	Communication failure between air handler and condenser
E1	Air handler environment temperature sensor failure
E2	Air handler fan coil temperature sensor failure
E3	Condenser fan coil temperature sensor failure
E4	Low refrigerant charge
E5	Model configuration error
E6	Air handler PG/DC fan failure
E7	Condenser ambient temperature sensor failure
E8	Condenser exhaust temperature sensor failure
E9	Condenser IPM module failure/ compressor drive failure
EA	Condenser current sensor failure
Eb	Main control board and display screen communication failure
EC	Condenser module communication failure
EE	Condenser EEPROM fault
EF	Condenser DC fan failure
EH	Condenser air intake sensor failure
EP	Compressor shell top failure
EU	Condenser voltage sensor failure
Ej	Condenser middle coil temperature sensor failure
En	Condenser air pipe temperature sensor failure
Ey	Condenser liquid pipe temperature sensor failure
FA	Compressor phase current detection fault
Fb	Refrigeration and heating overload protection
FC	Reduced frequency power overload protection
FE	Reduced/frequency module current (compressor phase current) protection
FF	Reduced/frequency module temperature protection
FH	Reduced/frequency drive protection
FP	Dewdrop protection

Error Code	Description
FU	Frost protection
P0	IPM module protection
P1	Over and under voltage protection
P2	Overcurrent protection
P3	Other protections
P4	Condenser exhaust temperature is too high
P5	Refrigerant anti-freezing protection
P6	Refrigerant anti-overheating protection
P7	Heating and anti-overheating protection
P8	Condenser temperature too high or too low protection
P9	Compressor drive protection (abnormal load)
PA	Top outlet wind plate communication fault/mode conflict
F0	Infrared sensing sensor failure
F1	Electricity module failure
F2	Exhaust temperature sensor failure
F3	Outer pipe temperature sensor bag failure protection
F4	Refrigerant circuit abnormal protection
F5	PFC protection
F6	Compressor missing/reverse phase protection
F7	Module temperature protection
F8	Four-way valve reversing abnormal protection
F9	Module temperature sensing circuit failure
Fj	Reduced frequency exhaust protection
Fn	Reduced frequency external machine AC current protection
Fy	Reduced frequency lack of fluorine protection
H1	High-pressure switch malfunction
H2	Low-pressure switch malfunction
H3	High-pressure sensor failure
H4	Low-pressure sensor failure
Hd	Air handler refrigerant leak protection

4.3 Components

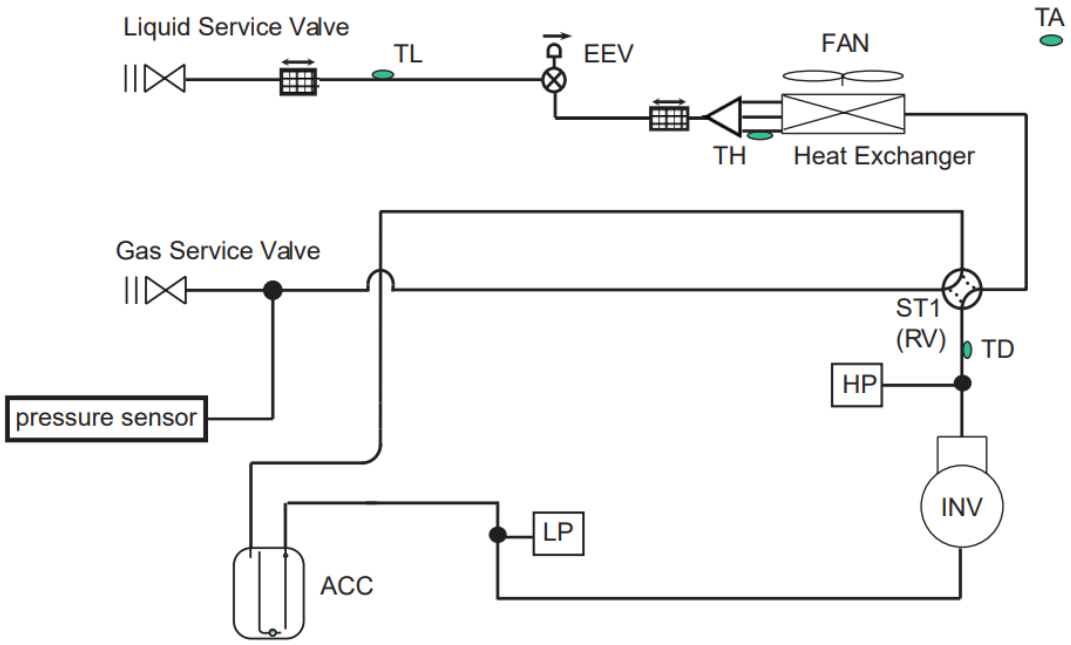

Name	Symbol	Function
Inverter Compressor	INV	Adjusts refrigerant flow rate by changing the speed (RPS) based on objective pressure.
DC Motor	FAN	Outputs heat exchanger capacity by adjusting the motor rotation speed based on operation pressure.
Electronic Expansion Valve	EEV	1. Fully open in cooling mode and defrost. 2. Controls compressor discharge superheat in heating mode.
Reversing Valve	ST1 (RV)	Switches the operation mode between heating and cooling (including defrost control).
Temperature Sensor	TH	Controls defrost during heating operation.
	TA	Detects the outdoor ambient temperature and controls the fan speed.
	TL	Detects the liquid line temperature and calculates sub-cooling (SC).
	TD	Detects the compressor discharge temperature and calculates discharge superheat (DSH).
	TF	Detects the heat sink temperature of the inverter module.
High Pressure Switch	HP	Detects high pressure.
Low Pressure Switch	LP	Detects low pressure.
Accumulator	ACC	Prevents the compressor from ingesting liquid refrigerant.

4.4 Troubleshooting

! CAUTION

If one of the following conditions occur, turn power to the system off immediately and contact a technician or support for further assistance.

- The operation light continues to flash rapidly after the system has been restarted.
- The unit continually trips fuses or circuit breakers.
- A foreign object or water enters the system.
- The indoor unit leaks.
- Other abnormal situations.

The following symptoms are not malfunctions and in most situations will not require repairs.

Problem	Possible Cause
Abnormal condenser noise.	The unit will make different sounds based on its operation mode.
Both condenser and air handler make noise.	The system may hum during operation. This is normal in operation that is caused by refrigerant gas flowing through the system.
	When the system is stopped or in heat mode a hiss may be heard. This sound is normal and is caused by the refrigerant stopping or changing direction through the reversing valve.
The system does not turn on when pressing the On/Off button.	The system has a 3 minute protection that prevents the unit from overloading. The system cannot be restarted within 3 minutes of being turned off.
	Cooling and heating modes: If the operation light and PRE-DEF (Pre-heating/Defrost) indicators are shows, the outdoor ambient temperature is too low and the unit's anti-cold wind function is activated in order to defrost the system.
The unit changes from COOL mode to FAN mode.	The system changes settings to prevent frost from forming. Once the temperature increases, the unit will start operating again.
Both air handler and the condenser emit a white mist.	When the unit restarts in HEAT mode after defrosting, white mist may be emitted due to moisture generated from the defrosting process.
Dust is emitted from either the air handler or condenser.	The unit may accumulate dust during extended periods of non-use which can circulate once the system is powered on. This can be mitigated by covering the unit during long periods of inactivity.
The unit emits a bad odor.	The unit may absorb odors from the environment (such as furniture, cooking, cigarettes, etc.) which will be circulated during operation.
	The air handlers air filter has become moldy and should be cleaned.
The fan of the outdoor unit does not operate.	During operation, the fan speed is controlled to optimize operation.

When some of the issues below occur, please check the following points before contacting a technician.

Problem	Possible Cause	Solution
The system is not working.	Power failure	Wait for power to be restored.
	The power switch is off	Turn on the power.
	The fuse is burned out	Replace the fuse.
	The unit's 3-minute protection has been activated	Wait three minutes after restarting the system.
Poor cooling performance	The temperature setting may be higher than the ambient room temperature	Lower the temperature setting.
	The coils on the air handler or condenser is dirty	Clean the coils.
	The air filter is dirty	Remove the air filter and clean/replace.
	The air inlet or outlet of either unit is blocked	Turn the system off, remove the obstruction, and turn the system back on.
	Doors and windows are open	Make sure that all doors and windows are closed while operating the unit.
	Excessive heat is generated by sunlight	Close windows and curtains during periods of high heat or bright sunshine.
	Low refrigerant due to a leak	Check for leaks, re-seal if necessary, and top off refrigerant (Contact a service technician).
The system starts and stops frequently	There is too much or too little refrigerant in the system	Check for leaks and recharge the system with refrigerant. (Contact a service technician).
	There is air, incompressible gas or a foreign material in the system	Evacuate and recharge the system with refrigerant.
	System circuit is blocked	Determine which circuit is blocked and replace the malfunctioning piece of equipment.
	The compressor is broken	Replace the compressor
	The voltage is too high or too low	Install a manostat voltage regulator to regulate the voltage.
Poor heating performance	The outdoor temperature is lower than 44.5°F (6.9°C)	Check for leaks and recharge the system with refrigerant.
	Cold air is entering through doors and windows	Make sure that all doors and windows are closed during use.
	Low refrigerant due to a leak	Check for leaks, re-seal if necessary, and top off refrigerant.

4.5 Schematic

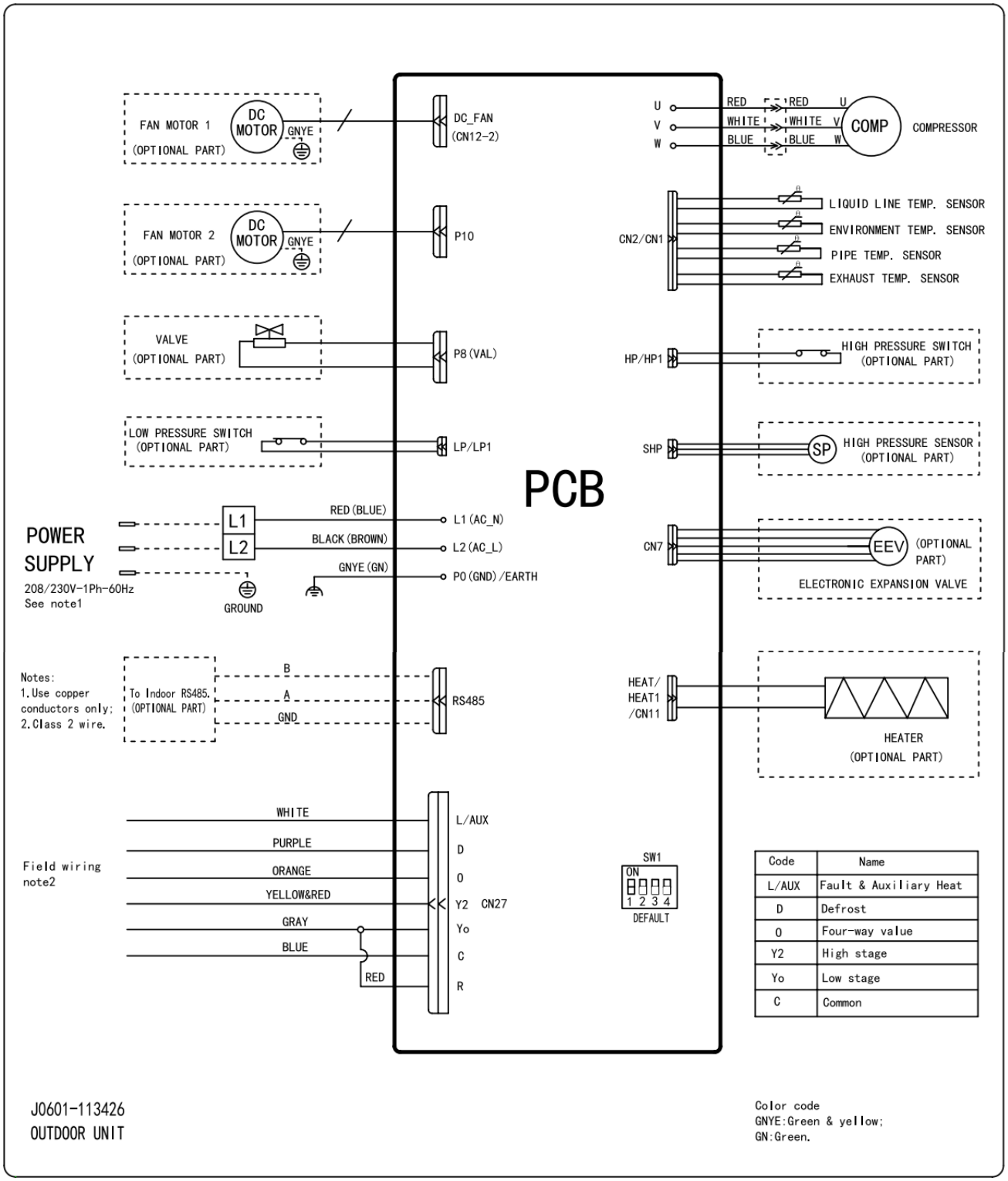



MRCOOL®
Signature Series
TruInverter™
Split System Heat Pump

The design and specifications of this product and/or manual are subject to change without prior notice.
Consult with the sales agency or manufacturer for details.