PRORUN®

60V

OPERATOR'S MANUAL

CORDLESS LITHIUM-ION ZERO TURN RADIUS 42-INCH RIDING LAWN MOWER

MODEL: PZT60V42

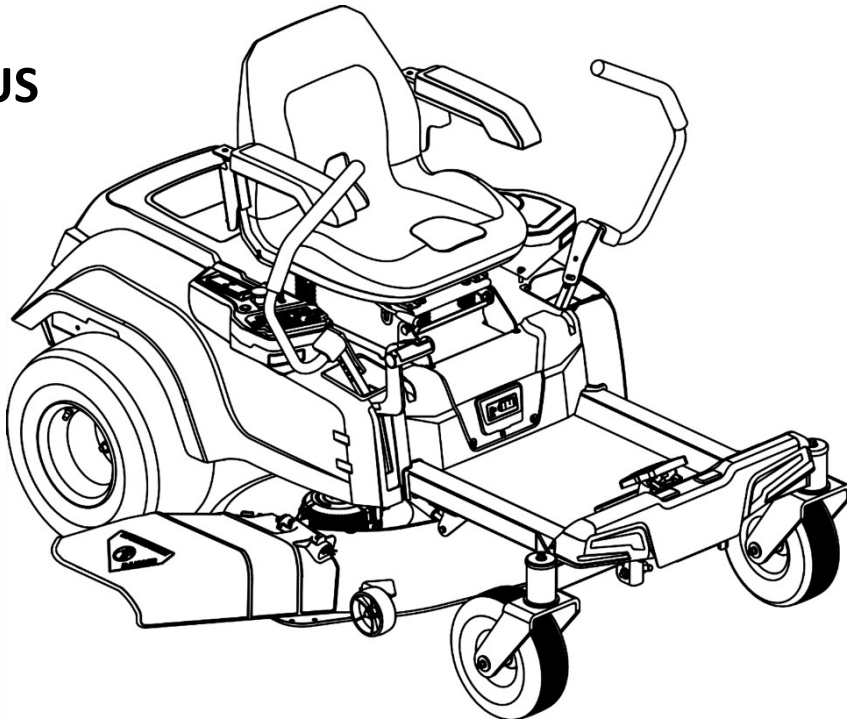

Everything PRORUN

Before using, read the instructions.

⚠ **IMPORTANT – READ CAREFULLY BEFORE USE.**

⚠ **IMPORTANT SAFETY INSTRUCTIONS – SAVE THESE INSTRUCTIONS**

WARNING: To reduce the risk of injury, the user must read and understand the User manual before using this product. Keep these instructions for future reference.

Please let us know what you think. To leave a comment and see our complete product line,

Visit:

PRORUNTOOLS.COM ★★★★★

1-844-905-0882, info@proruntech.com

Version: A – Issue Date: 10/14/2025

1. PRODUCT SPECIFICATIONS

Model	PZT60V42
Compatible Batteries	PB160100, PB16050
Battery Charger (Standard)	WTL6006PNG Input: 100-240V, 50/60Hz, Max. 5A Output: 60-85 V D.C., 1-6A, Max. 450W
Battery Charger (Rapid)	1200BG6018L Input: 120V, 50/60Hz, Max.7A Output: 60-72 V D.C., 1-12A, Max. 750W
Speed Forward (Max)	Control: 3.72 MPH (6 Km/h)
	Standard: 5.59 MPH (9 Km/h)
	Sport: 7.45 MPH (12 Km/h)
Speed Reverse	Up to 3.72 MPH (6 Km/h)
Tires Front/Tires pressure	20 PSI, 1.4 bars (11 x 4.0-5)
Tires Rear/Tires pressure	14.5 PSI, 1.0 bars (18 x 8.5-8)
Turning radius	0 inches (0 mm)
Length	69.96 inches (1777 mm)
Width	56.22 inches (1428mm)
Height	43.23 inches (1098 mm)
Weight	381 Lbs. (173 Kg)
Blade Rotation Speed (RPM)	2600, 2800, 3000, 3200
Cutting Width	42.52 inches (1080 mm)
Mower Deck	Steel
Cutting Heights	1.18 to 4.33 inches (30 to 110 mm)
Blades (Qty)	2
Blade Model	ZJ 494210130101
Measured Sound Power Level L_{WA}, dB(A)	86.4
Measured Sound Power Level K_{WA}, dB(A)	3
Guaranteed sound power level L_{WA}, dB(A)	96.88
Guaranteed sound power level K_{PA}, dB(A)	3.47
Vibration – Handle (left / right), m/s^2	2.593
Vibration – Main Body, m/s^2	0.895
K, m/s^2	1.5

- The declared vibration total value has been measured in accordance with a standard test method and may be used for comparing one machine with another.
- The declared vibration total value may also be used in a preliminary assessment of exposure.
- The vibration emission during actual use of the machine can differ from the declared total value depending on the ways in which the machine is used; and of the need to identify safety measures to protect the operator that are based on an estimation of exposure in the actual conditions of use (taking account of all parts of the operating cycle such as the times when the machine is switched off and when it is running idle in addition to the trigger time).

2. TABLE OF CONTENTS

1. PRODUCT SPECIFICATIONS 2

2. TABLE OF CONTENTS 3

3. GENERAL WARNINGS.....4

4. GENERAL SAFETY REGULATIONS 5

5. SYMBOLS.....12

6. SET UP.....14

7. CONTROLS.....20

8. OPERATIONS 30

9. MAINTENANCE 40

10. STORAGE & TRANSPORT.....52

11. TROUBLESHOOTING 54

12. MOWER STATUS REFERENCE & FAULT CODES 61

13. PRODUCT DIMENSIONS 65

14. EXPLODED VIEWS AND PARTS 66

3. GENERAL WARNINGS

⚠WARNING! FOLLOW THESE INSTRUCTIONS CAREFULLY!
Before using, read and understand the installation and operation instructions in this manual to become familiar with how this lawn mower works. Failure to follow all instructions listed below may result in electric shock, fire, and/ or severe injury.

1. Always follow these operating instructions so that they can be consulted if you need any information about the machine.
2. Only pass the machine to other people together with these operating instructions.
3. Comply with the safety and warning information in these operating instructions.
4. The lawn mowers are supplied with various levels of equipment. Please note that the illustrations may differ from the original. Please contact PRORUN Customer Service if you encounter difficulties in following the descriptions.
5. Comply with the supplied assembly instructions.

⚠ DANGER! THIS MACHINE WAS BUILT TO BE OPERATED ACCORDING TO THE SAFE PRACTICES IN THIS MANUAL.
As with any type of power equipment, carelessness, or error on the part of the operator can result in severe injury. This machine can throw objects and amputate fingers, hands, toes, and feet.
Failure to observe the following safety instructions could result in severe injury or death. Non-observance will result in the risk of severe injury or death to oneself or others.

⚠ CAUTION! CAREFULLY READ THIS INSTRUCTION MANUAL COMPLETELY. ABIDE BY ALL THE SAFETY REGULATIONS BEFORE, DURING, AND AFTER USING THE MACHINE.
Keep this manual and all the attachments for any future consultation.
In case of any change in ownership, the manual must be handed over together with the machine.

HOW TO READ THE MANUAL

Some paragraphs in the manual containing essential information regarding safety and operation are emphasized in the following ways.

⚠ DANGER! INDICATES A HAZARDOUS SITUATION WHICH, IF NOT AVOIDED, WILL RESULT IN DEATH OR SEVERE INJURY.

⚠ WARNING! INDICATES A HAZARDOUS SITUATION WHICH, IF NOT AVOIDED, COULD RESULT IN DEATH OR SEVERE INJURY.

⚠ CAUTION! INDICATES A HAZARDOUS SITUATION WHICH, IF NOT AVOIDED, COULD RESULT IN MINOR OR MODERATE INJURY.

SAFETY INSTRUCTIONS INDICATES A HAZARDOUS SITUATION WHICH MAY ENDANGER HUMAN HEALTH OR THE SAFETY OF THE MACHINE. IT PROVIDES INSTRUCTIONS AND SPECIFIC PROCEDURES TO BE FOLLOWED.

NOTE ADDRESSES PRACTICES AND INFORMATION NOT RELATED TO PERSONAL INJURY. PROVIDES INSTRUCTIONS AND INDICATES THE NEED TO DEAL WITH SPRCIFIC SITUATIONS.

4. GENERAL SAFETY REGULATIONS

DESIGNATED USE

The lawn mower is intended for mowing in domestic gardens and properties with a Max Slope of 15°. Additional applications, such as for mulching, are only permitted if the original accessories are used and in compliance with the maximum load values. This appliance is intended solely for use in noncommercial applications. Any other uses (as well as unauthorized conversions or add-ons) are regarded as contrary to the intended use and will result in exclusion of the warranty. The manufacturer will thus decline any responsibility for damage and / or injury suffered by the user or third parties.

POSSIBLE MISUSE

The lawn mower is not designed for commercial use in public parks and sports grounds, agriculture, or forestry. Check the relevant road traffic regulations before driving the machine on a public road. When transporting the machine on another vehicle, always use approved cargo control tie downs and make sure that the machine is securely held.

⚠ WARNING! READ ALL SAFETY WARNINGS, INSTRUCTIONS, ILLUSTRATIONS, AND SPECIFICATIONS PROVIDED WITH THIS MACHINE.
Failure to follow all instructions listed below may result in electric shock, fire, and/or severe injury.

NOTE SAVE ALL WARNINGS AND INSTRUCTIONS FOR FUTURE REFERENCE.
The term "machine" in the warnings refers to your battery-operated (cordless) machine.

⚠ WARNING! WHEN USING ELECTRIC RIDING MOWERS, BASIC SAFETY PRECAUTIONS SHOULD ALWAYS BE FOLLOWED TO REDUCE THE RISK OF FIRE, ELECTRIC SHOCK, AND PERSONAL INJURIES.
Become familiar with the basic precautions outlined in the following pages.

1. WORK AREA SAFETY

- **Keep the work area clean and well-lit.** Cluttered or dark areas invite accidents.
- **Do not operate the machine in an explosive atmosphere, such as in the presence of flammable liquids, gases, or dust.** The machine can create sparks which may ignite dust or fumes.
- **Keep children and bystanders away while operating the machine.** Distractions can cause you to lose control.

2. ELECTRICAL SAFETY

- **Machine plugs must match the outlet. Never modify the plug in any way. Do not use any adapter plugs with grounded or earthed machines.** Unmodified plugs and matching outlets will reduce the risk of electric shock.
- **Avoid body contact with grounded or earthed surfaces, such as pipes, radiators, ranges, and refrigerators.** There is an increased risk of electric shock if your body is grounded or earthed.
- **Do not expose the machine to rain or wet conditions.** Water entering the machine will increase the risk of electric shock.
- **Do not abuse the cord. Never use the cord for carrying, pulling, or unplugging the machine. Keep all cords away from heat, oil, sharp edges, and moving parts.** Damaged or entangled cords increase the risk of electric shock.
- **When operating the machine outdoors, use an extension cord suitable for outdoor use.** The use of a cord suitable for outdoor applications reduces the risk of electric shock.
- **If operating the machine in a damp location is unavoidable, use a residual current device (RCD) protected supply.** Use of an RCD reduces the risk of electric shock.

3. PERSONAL SAFETY

- **Stay alert, watch what you are doing, and use common sense when operating the machine. Do not use the machine while you are tired or under the influence of drugs, alcohol, or medication.** A moment of inattention while operating the machine may result in severe personal injury.
- **Use personal protective equipment. Always wear eye protection.** Protective equipment such as a dust mask, non-skid safety shoes, hard hat, or hearing protection used for appropriate conditions will reduce personal injuries.
- **Prevent unintentional starting. Ensure the switch is in the OFF position before transporting or connecting to any power source and / or battery pack.** Moving an energized machine or having your finger on the ON / OFF switch invites accidents and serious injuries.
- **Remove any tool, adjust key, or wrench before turning the machine on.** A tool, wrench, or key left attached to a rotating part of the machine may result in personal injury.
- **Always keep proper sitting and balance.** This enables better control of the machine in unexpected situations.
- **Dress properly. Do not wear loose clothing or jewelry. Keep your hair and clothing away from moving parts.** Loose clothes, jewelry, or long hair can be caught in moving parts.
- **Do not let familiarity gained from frequent use of the machine allow you to become complacent and ignore correct safety principles.** A careless action can cause severe injury within a fraction of a second.

4. MACHINE USE AND CARE

- **Do not force the machine. Use the machine correctly for your applications.** The machine will do the job better and safer at the rate for which it was designed.
- **Do not use the machine if the switch does not turn it ON and OFF.** Any machine that cannot be controlled with the switch is dangerous and must be repaired.
- **Disconnect the plug from the power source and / or remove the battery packs from the machine before making any adjustments, changing accessories, or storing the machine.** Such preventive safety measures reduce the risk of starting the machine accidentally.
- **Store idle machines out of the reach of children, and do not allow people unfamiliar with the machine or these instructions to operate the machine.** Machines are dangerous in the hands of untrained users.
- **Maintain the machine and all accessories. Check for misalignment or binding of moving parts, breakage of parts, and any other condition that may affect the machine's operation. If damaged, have the machine repaired by a PRORUN-approved service center before use.** Many accidents are caused by poorly maintained machines.
- **Keep cutting tools sharp and clean.** Properly maintained cutting tools with sharp cutting edges are less likely to bind and are easier to control.

- **Use the machine, tool bits, and all accessories in accordance with these instructions, while considering the working conditions, and the work application to be performed.** Use of the machine for operations different from those intended could result in a hazardous situation.
- **Keep handles and grasping surfaces dry, clean, and free from oil and grease.** Slippery handles, grasping, and standing surfaces do not allow for safe handling and control of the tool in unexpected situations.

5. BATTERY TOOL USE AND CARE

- **Recharge only with the manufactured specified charger.** A charger that is suitable for one type of battery pack may create a risk of fire when used with another battery pack.
- **Use the machine only with specifically designated battery packs.** Use of any other battery packs may create a risk of injury and fire.
- **When the battery pack is not in use, keep it away from other metal objects, such as paper clips, coins, keys, nails, screws, or other small metal objects that can make a connection from one terminal to another.** Shorting the battery terminals together may cause burns or a fire.
- **Under abusive conditions, liquid may be ejected from the battery. Avoid contact. If contact accidentally occurs, flush with water. If liquid contacts eyes immediately seek medical help.** Liquid ejected from the battery may cause irritation or burns.
- **Do not use a battery pack or tool that is damaged or modified.** Damaged or modified batteries may exhibit unpredictable behavior resulting in fire, explosion, or risk of injury.
- **Do not expose a battery pack or tool to fire or excessively high temperature.** Exposure to fire or temperatures above 266 °F (130 °C) may cause an explosion.
- **Follow all charging instructions and do not charge the battery pack or tool outside the temperature range specified in the instructions.** Charging improperly or at temperatures outside the specified range may damage the battery and increase the risk of fire.

6. SERVICE

- Have your machine serviced by a PRORUN-approved repair person using only identical replacement parts. This will ensure that the safety of the machine is maintained.
- The service never damaged battery packs. Service of battery packs should only be performed by the manufacturer or PRORUN-approved service providers.

7. TRAINING

- Become acquainted with the controls and the proper use of the machine. Learn how to stop the machine quickly.
- Never allow the machine to be used by children or individuals who are not familiar with the instructions. Local laws may establish a minimum age for users.
- Do not allow children or other passengers to ride on the machine.
- The user is responsible for accidents or unexpected events occurring to other people or their property. It is the user's responsibility to assess the potential risk of the area where work is to be conducted. Take all the necessary precautions to ensure your safety and that of others, particularly on slopes or rough, slippery, and unstable ground.
- This manual is an integral part of the machine and must always be accompanied by it during temporary or definitive transfers.

8. PRELIMINARY OPERATIONS

PERSONAL PROTECTIVE EQUIPMENT (PPE)

- Wear suitable clothing, strong work shoes with anti-slip soles, and long pants. Do not operate the machine barefoot or wear open sandals. Wear hearing protection devices.
- Use of hearing protection can reduce the ability to hear any warnings (shouting or alarms). Be careful of what occurs around you in the work area.
- Never wear scarves, necklaces, bracelets, loose flowing clothing, necklaces, ties, or any hanging or flapping accessory that could catch in the machine, or any element of the work area.
- Tie up long hair.

9. DURING OPERATION WORK AREA

- Thoroughly inspect the entire work area and remove anything that could be thrown by the machine, or that could damage the cutting means / rotating units (stones, branches, iron wire, bones, etc.)
- Do not use the machine in environments that pose the risk of explosion, or in the presence of flammable liquids, gases, or powders. Electrical contact or mechanical rubbing can generate sparks that can ignite powder or vapor.
- Work only in daylight, or with good artificial light, in good visibility conditions.
- Keep people, children, and animals away from the work area. Another adult should supervise children.
- Avoid working with wet grass, in the rain, and when there is a risk of a thunderstorm or lightning.
- Pay careful attention to uneven ground (hills, dips), slopes, hidden hazards, and obstacles that could limit visibility.
- Be incredibly careful near ravines, ditches, or embankments. The machine could overturn if a wheel slides over the edge or if the earth gives way.

- Pay close attention when on sloping ground which may require special care to prevent the overturning or loss of control of the machine. The main reasons for loss of control are:
  - Insufficient wheel grip.
  - Excessive speed.
  - Sharp changes of direction.
  - Inadequate braking.
  - Type of machine unsuitable for its task.
  - Lack of awareness of the effect of ground conditions.
  - Using the machine for towing.
  - Lack of awareness of traffic when using.

NOTE THE MACHINE DETAILED IN THIS MANUAL IS NOT DESIGNED FOR USE AS A TOWING VEHICLES.

10. CONDUCT

- When working behind the wheel, do not become distracted, and maintain the required level of concentration.
- Exercise caution when reversing or moving backwards. Look behind you to make sure there are no obstacles before and during operations in reverse travel.
- Pay careful attention when using the attachments that can alter the stability of the machine, especially on slopes.
- Always keep hands and feet away from the cutting blades when starting and when using the machine.
- Keep hands and feet away from the seat support. There is the risk of crushing injuries

⚠ WARNING! THE CUTTING BLADES WILL CONTINUE TO ROTATE FOR A FEW SECONDS AFTER DISENGAGEMENT OR AFTER SWITCHING OFF THE MOTOR.

⚠ CAUTION! IF SOMETHING BREAKS OR AN ACCIDENT OCCURS DURING WORK, TURN OFF THE MOTOR IMMEDIATELY AND MOVE THE MACHINE AWAY TO PREVENT FURTHER DAMAGE.
IF AN ACCIDENT OCCURS WITH INJURIES OR THIRD PARTIES ARE INJURED, CONDUCT THE FIRST AID MEASURES MOST SUITABLE FOR THE SITUATION IMMEDIATELY, AND CONTACT THE MEDICAL AUTHORITIES FOR ANY NECESSARY
HEALTH CARE. Following this occurrence, be sure to carefully remove any debris which could cause damage or injury to people or animals if ignored.

11. RESTRICTIONS OF USE

- NEVER use the machine with any damaged parts or accessories.
- NEVER disengage, deactivate, remove, or tamper with the safety systems or micro switches installed.
- DO NOT strain the machine too much, and do not use the machine for inappropriate heavy- duty work. If you use the machine correctly, you will reduce the risk of hazards and improve the quality of your work.

⚠ WARNING! THE MACHINE HAS NOT BEEN TYPE-APPROVED FOR CIRCULATION ON PUBLIC ROADS. IT MUST BE USED (AS INDICATED BY THE HIGHWAY CODE) IN PRIVATE AREAS CLOSED TO TRAFFIC.

12. MAINTENANCE

Ensure regular maintenance and correct storage to maintain machine safety and high- performance levels.

- NEVER use the machine with worn or damaged parts. Faulty or worn-out parts must always be replaced and never repaired.
- Be careful during all adjustments of the machine to prevent entrapment of the fingers between moving cutting blades and fixed parts of the machine.
- Have your machine serviced by a PRORUN-approved service center using only identical replacement parts. This will ensure that the safety of the machine is maintained.
- Do not attempt to repair batteries. Repairs must be conducted by the manufacturer or by a PRORUN-approved service center.

⚠ CAUTION! THE NOISE AND VIBRATION LEVELS SHOWN IN THESE INSTRUCTIONS ARE THE MAXIMUM LEVELS WHEN USING THE MACHINE.

The use of an unbalanced cutting element, the excessive speed of movement, or the absence of maintenance has a considerable influence on noise emissions and vibrations. Consequently, it is necessary to take preventive steps to eliminate possible damage due to high levels of noise and stress from vibration. Maintain the machine well, wear ear protection devices, and take breaks while working

13. STORAGE

- To reduce fire risks, do not leave containers with debris inside a room.

14. ENVIRONMENTAL PROTECTION

Protecting the environment must be a significant and top priority for machine use, to the benefit of civil co-habitation, and of the environment that we live in.

- Comply with local regulations for the disposal of packaging, deteriorated parts, or any elements with a strong environmental impact. This waste must not be disposed of with regular waste but must be separated and taken to collection centers for proper recycling.
- Comply with local regulations for the disposal of waste materials.

- When the machine is withdrawn from service, do not dispose of it in the environment, but take it to a waste disposal facility in accordance with local regulations.

5. SYMBOLS

This page depicts and describes safety symbols that may appear on this product. Read, understand, and follow all instructions on the machine before attempting to assemble and operate. The labels on the machine are to be considered an integral part of the machine. Should a label come off or become illegible, contact PRORUN customer service to replace it.

⚠ WARNING! YOUR RESPONSIBILITY - RESTRICT THE USE OF THIS POWER MACHINE TO PERSONS WHO READ, UNDERSTAND, AND FOLLOW THE WARNINGS AND INSTRUCTIONS IN THIS MANUAL AND ON THE MACHINE.

SAVE THESE INSTRUCTIONS!

SYMBOLS	MEANING
	**READ THE OPERATORS MANUAL'S** Read, understand, and follow all instructions in the manual's before attempting to assemble and operate.
	**WARNING – ROTATING BLADES** Do not put hands or feet near rotating parts or under the cutting deck. Contact with the blades can amputate hands and feet.
	**WARNING – EJECTED OBJECTS** This machine may pick up and throw objects which can cause personal injury.
	**WARNING – ELECTRIC SHOCK** Do not use the charger in the rain and do not run the mower with the charger plugged in. Do not operate mower in rain or wet conditions.
	**BYSTANDERS** Keep bystanders, helpers, children, and pets at least 75 feet from the machine while it is in operation.
	**WARNING – SLOPER OPERATION** Do not operate this machine on a slope greater than 15 degrees. Do not trim horizontally on slopes greater than 10 degrees. Use caution on slopes. Do not use slopes near open water.
	**DANGER – ROTATING BLADES** To reduce the risk of injury, keep hands and feet away. Do not operate unless discharge cover or grass catcher is in its proper place. If damaged, replace immediately.

SYMBOLS	MEANING
	**DANGER – ROTATING BLADES** Never carry passengers. Never carry children, even with the blades off.
	**DANGER – ROTATING BLADES** To avoid a back-over accident, keep children away from the machine while it is in operation.
	**DANGER – ROTATING BLADES** Always look down and behind before and while backing up to avoid a back-over accident.
	**ATTENTION** Remove the key and read instructions before carrying out any maintenance or repair work.
	**WARNING-FIRE HAZARD** Do not allow debris to accumulate as the buildup of the debris can lead to a fire.
	**WARNING – MOWERS STABILITY** The cargo box is not a seat. Do not allow anyone to sit or stand on the cargo box. The storage area has a maximum weight capacity of 20 pounds. Do not overload the cargo box as it may damage the machine and affect its stability.
	**WARNING – FIRE HAZARD** Never use pressure lances to wash the transmission system.

Any damaged or illegible decals must be replaced. Order replacement decals from a PRORUN-authorized service center.

Write the identification data of the machine on the back of the operator's manual for your records.

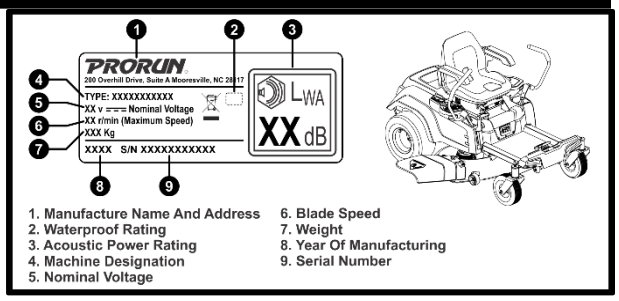

6. SET UP

UNPACKING AND ASSEMBLY

NOTE UNPACKING AND COMPLETING THE ASSEMBLY SHOULD BE PERFORMED ON A FLAT AND STABLE SURFACE, WITH ENOUGH SPACE FOR MOVING THE MACHINE AND ITS PACKAGING, WITH ACCESS AND USE OF SUITABLE EQUIPMENT.

6.1 OPENING THE PACKAGING

1. The machine is shipped partially dismantled and packaged in a crate to protect it during transport. The packaged machine will appear as in Fig 1A.
2. Remove all shrink wraps and cut the plastic straps that surround the package.
3. Lift off the corrugated exterior cover assembly and discard the wooden support posts. Refer to Figure 1B.

Fig 1A

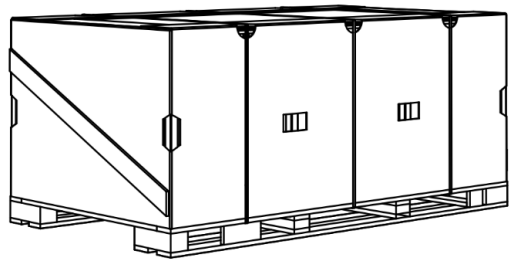

Fig 1B

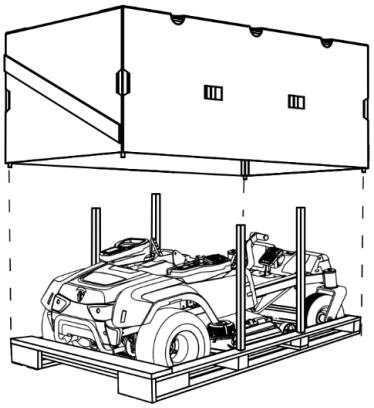

⚠ CAUTION! WEAR HEAVY GLOVES.

NOTE TO PREVENT DAMAGE TO THE CUTTING DECK, RAISE ITS MAXIMUM HEIGHT AND TAKE EXTREME CARE WHEN TAKING THE MACHINE OFF THE PALLET.

6.2 PACKAGE CONTENTS

When unpacking the machine, take care to gather all the individual parts and fittings. Do not damage the cutting deck when taking the machine off the pallet.

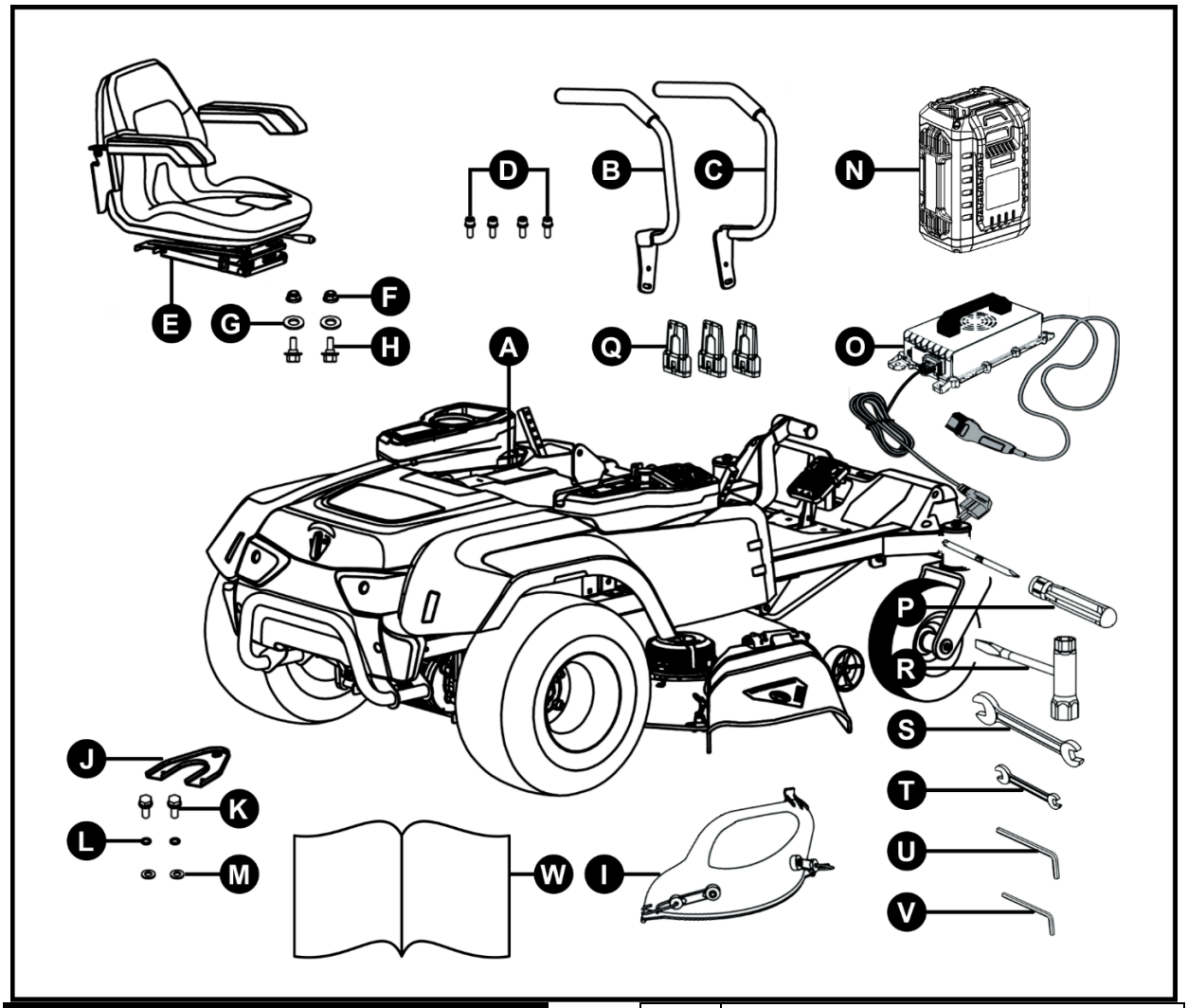

PART	DESCRIPTION
A	60V ZTR LAWN MOWER
B	STEERING LEVER (RIGHT)
C	STEERING LEVER (LEFT)
D	BOLTS (M8 X 25)
E	SEAT
F	NUT (M8 X 2)
G	NYLON WASHER (8 mm)
H	BOLTS (M8 X 2)
I	MULCHING KIT
J	HITCH KIT
K	BOLT (M10 X 1.25 X 20)

L	WASHER (10mm)
M	NUT (M10 X 1.25 X 20)
N	60V BATTERY
O	BATTERY CHARGER
P	SCREWDRIVER
Q	SAFETY KEY
R	MULT-TOOL SCRENCH (13-19mm)
S	OPEN-END WRENCH (13 – 15mm)
T	OPEN-END WRENCH (8 – 10mm)
U	ALLEN WRENCH (S6)
V	ALLEN WRENCH (S5)
W	OPERATOR'S MANUAL

6.3 ASSEMBLY

NOTE FOR STORAGE AND TRANSPORT PURPOSES, SOME OF THE MACHINE'S COMPONENTS ARE NOT INSTALLED AT THE FACTORY AND HAVE TO BE ASSEMBLED AFTER UNPACKING.

STEERING LEVERS INSTALLATION

1. Remove the four M8 X 25 Bolts (2) from the accessory box and set them aside.
2. Lift one of the steering levers (1R, 1L) and align the holes in the steering lever with the holes in the corresponding mounting pole. Select the preferred steering-lever operating height and then use the supplied open-end wrench to secure the steering lever with the two supplied bolts as indicated in Figure 2.
3. Assemble the other steering lever and tighten with the remaining two bolts in the same manner.

Refer to Figure 2.

Fig 2

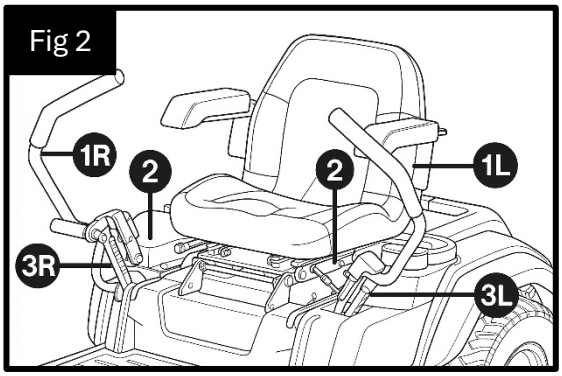

NOTE TO MAXIMIZE OPERATOR COMFORT AND USER CONTROL, THE HEIGHT AND ANGLE OF THE MOWER STEERING LEVERS CAN BE ADJUSTED.

HEIGHT ADJUSTMENT OF THE STEERING LEVERS

- Hole 1 & 3: High steering levers
- Hole 2 & 4: Middle steering levers
- Hole 3 & 5: Low steering levers

Refer to Figure 3.

Fig 3

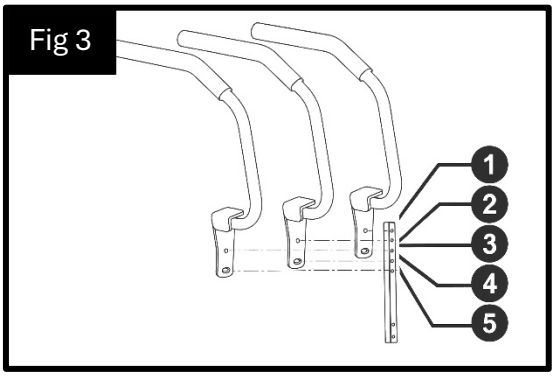

ANGLE ADJUSTMENT OF THE STEERING LEVERS

1. Loosen the M8 X 25 Bolts on the steering levers Mounting Bracket (1A, 1B), but do not remove them.
2. Rotate the Steering Lever (3) forward or backward to achieve the desired angle.
3. Retighten the bolts to secure.

Refer to Figure 4.

Fig 4

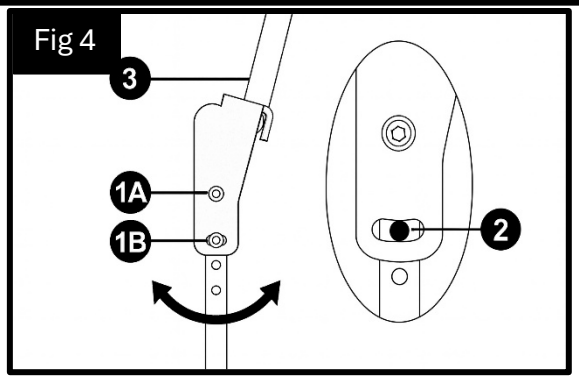

NOTE THE LEFT AND RIGHT STEERING LEVERS SHOULD BE ADJUSTED SO THAT THEY ALIGN WITH EACH OTHER WHEN IN THE NEUTRAL POSITION. NEVER INSTALL THE STEERING LEVERS IN AN ASYMMETRICAL OPERATING HEIGHT.

SEAT ASSEMBLY

1. Align and inset the Seat (1) between the two Seat Brackets welded in the frame.
2. Insert the M8 bolts (4) and the nylon washers (3) through the brackets and the seat's mounting holes.
3. Finalize the assembly by installing and tightening the M8 nuts (2) using the open wrench in the accessory tools.

Refer to Figure 5.

Fig 5

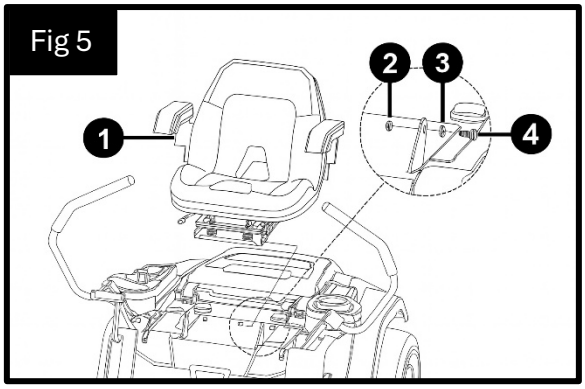

4. Connect the Wire Harness (4B) to the Seat Switch electric coupler (4A) located under the seat.

Refer to figure 6.

Fig 6

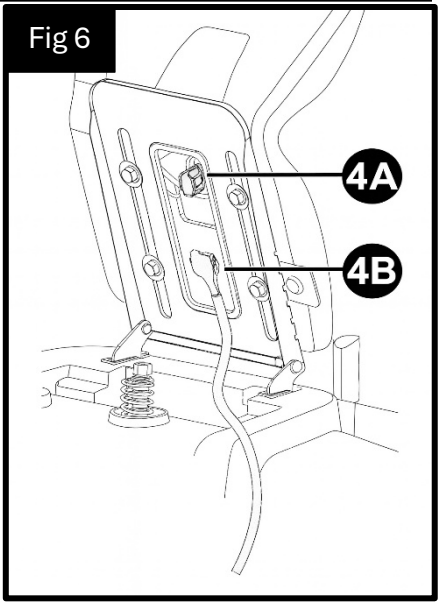

SIDE DEFLECTOR ASSEMBLY

1. Insert the Pin Clip (1) and Washer (2) onto the right end of the Pivot Rod (3).
2. Insert the Pivot Rod assembly into the Side Deflector's sockets (4), through the bracket on the Cutting Deck (6), and through the Torsion Spring (5) as illustrated in Figure 8.
3. Finalize the assembly by inserting the other Washer (2) and Pin Clip (1) at the opposite end.

Refer to Figure 7.

Fig

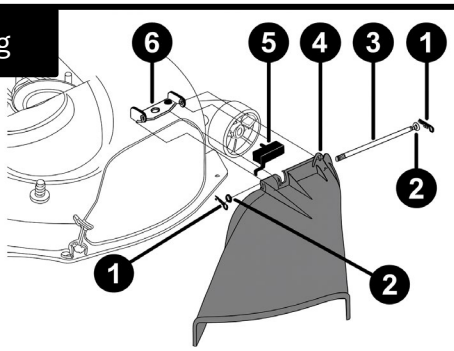

⚠ WARNING! TO PREVENT THE RISK OF INJURY, DO NOT OPERATE OR MOW WHEN THE GUARD IS NOT INSTALLED.

MULCHING KIT ASSEMBLY

1. Open the Side Deflector (A).
2. Pass the Lug Boss (4) on the Mulching Kit (B) through the bottom of the Side Deflector's Pivot Rod (1).
3. Insert the lower right corner of the Mulching Kit (6) into the cutting deck's corresponding hole (3).
4. Insert the right Hook (5) into the Cutting Deck's corresponding hole (2).
5. Insert the left Hook (5) into the Cutting Deck's corresponding hole (2).

Refer to Figure 8.

Fig

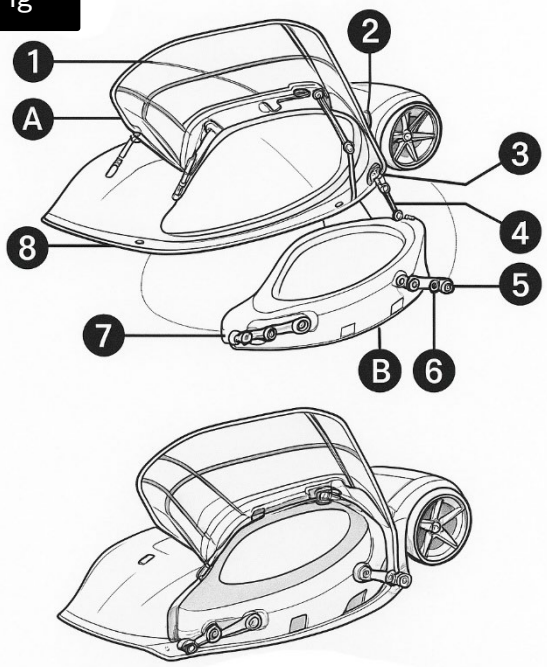

MOUNTING THE REAR TAILGATE

1. Locate the two mounting holes under the rear bumper and align the Tailgate (1)
2. Insert the two sets of M10 X 1.25 Bolts (2), Spring Washers (3), and Flat Washers

(4) into the holes to mount the Tailgate onto the frame.

3. Tighten the assembly.

Refer to Figure 9.

Fig

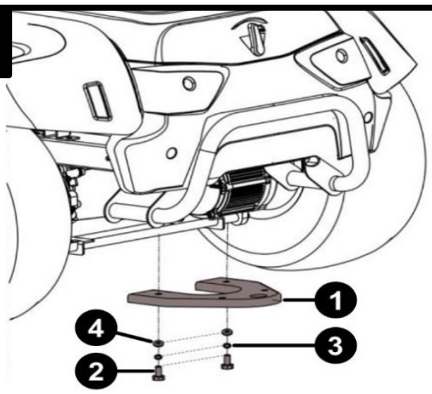

7. CONTROLS

7.1 CONTROLS & FEATURES

NOTE REFERENCES TO LEFT (L), RIGHT (R), FRONT (F), AND BACK / REAR (B) INDICATES THE POSITIONS ON THE MOWER WHEN THE OPERATORS IS FACING FORWARD WHILE SEATED IN THE SEAT.
Refer to Figure 10.

Fig 10

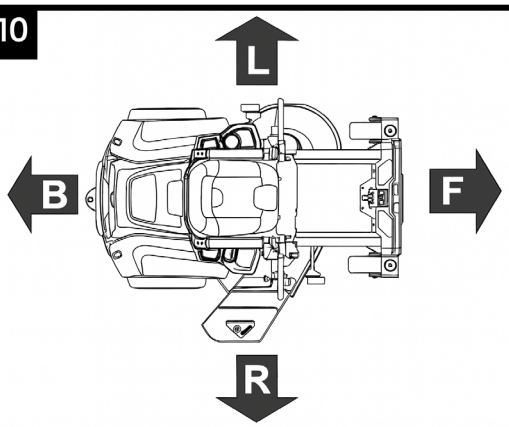

7.2 INDENTIFICATION OF MAIN COMPONENTS

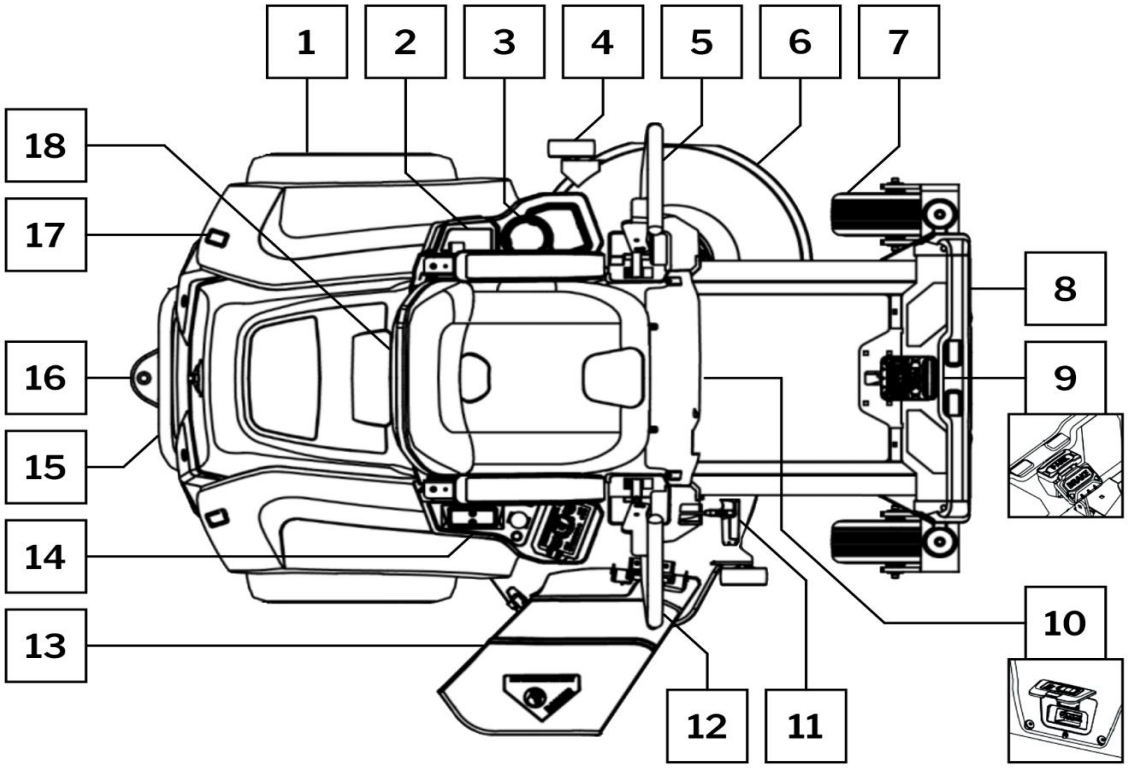

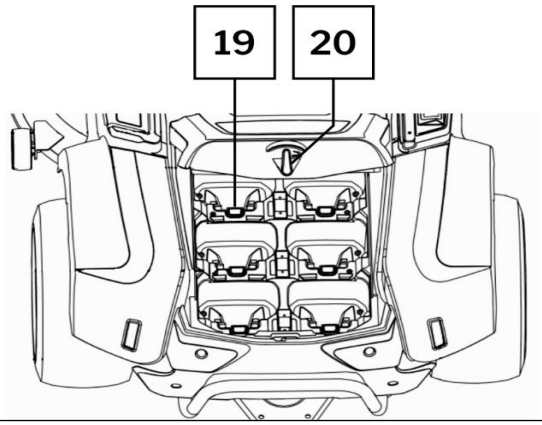

Battery Compartment (Part 18 Open)

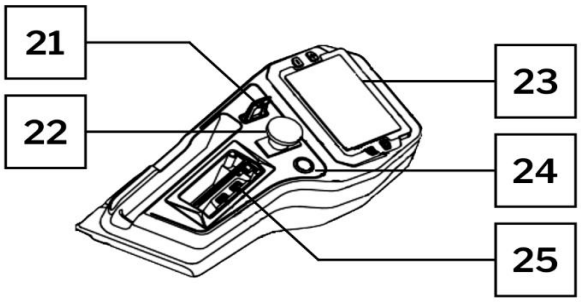

Control Panel (Part 3)

PART	DESCRIPTION
1.	Rear Wheels
2.	Storage Box
3.	Cup Holder
4.	Deck Wheel
5.	Steeling Lever Left
6.	Blade Deck
7.	Front Wheels
8.	LED Headlights
9.	Parking Brake
10.	Charging Port
11.	Deck Lift Handle
12.	Steeling Lever Right
13.	Discharge Chute

14.	Control Panel
15.	Rear Bumper
16.	Rear Tailgate
17.	LED Rear Lights
18.	Seat
19.	Battery Compartment Cover Release Lever
20.	Battery Compartment
21.	Safety Key
22.	Blade Engage and Disengage Knob
23.	LCD Screen
24.	Start / Stop Power Button
25.	USB Port

SAFETY KEY

Safety Key is an authorization device. It must be inserted before the Start / Stop Button is pressed to start the mower. The safety key must be removed when the lawnmower is not used.

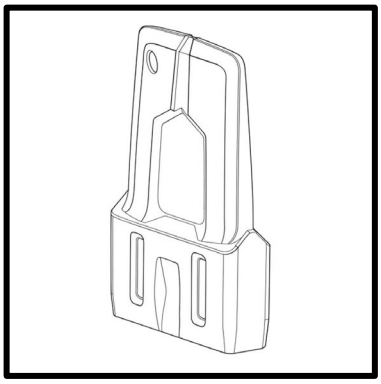

START / STOP BUTTON

The Start / Stop Button powers the machine after the Safety Key is correctly in place.

- To activate the machine, press the Start / Stop Button for five seconds to start the motors. The LCD screen will briefly display “Fuel Gauge” when pressed.
- When the button is pressed again for three seconds, the LCD screen will turn OFF, and the power function will shut off.

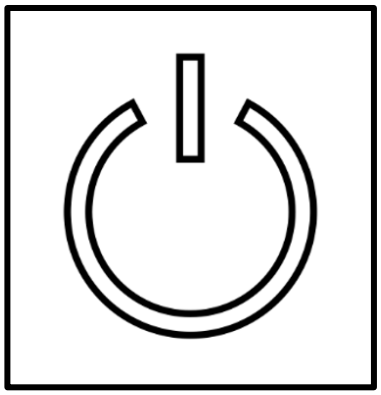

BLADE START / STOP KNOB - PTO (POWER TAKE-OFF)

The Blade Start / Stop Knob operates the electric motors on the deck to engage and stop the rotation of the cutting blades. The PTO switch is a critical safety device developed to prevent unintentional blade actuation of lawn equipment.

- Pull the knob upward to engage the blades or push the knob downward to disengage the blades.

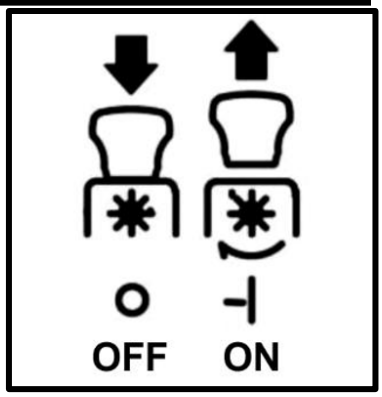

STEERING LEVERS

The left and right Steering Levers control the mower's speed direction, stopping (neutral position), and electric-park brake (open position).

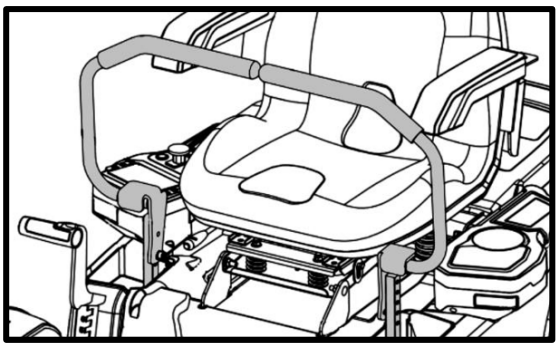

SETTING THE PARKING BRAKE

To set the parking brake:

7. Place the steering levers (1A, 1B) in the open position.
8. Fully depress and hold the Brake Pedal (2).
9. Press your foot forward and fully depress the Parking Brake (3) with the front of your foot.
10. Release the Brake Pedal.

To release the parking brake:

7. Depress and release the Brake Pedal.

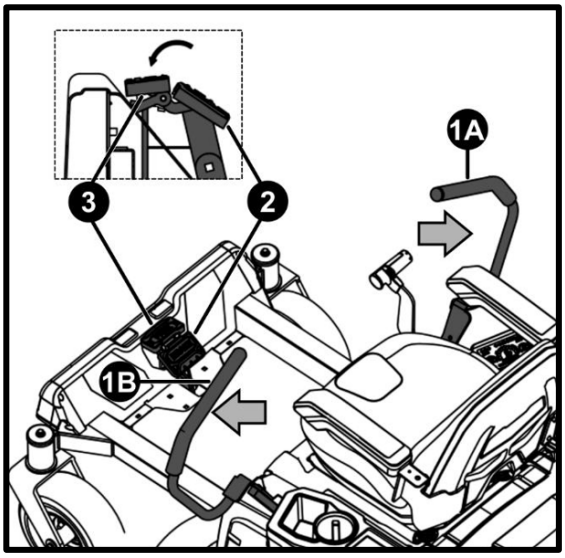

⚠ WARNING! NEVER LEAVE THE MOWER UNATTENDED WHEN THE MOTOR IS RUNNING OR WITH THE KEY IN THE POWER SWITCH. VERIFY THAT THE PARKING BRAKE IS SET AND THE SAFETY KEY HAS BEEN REMOVED. FAILURE TO SET THE PARKING BRAKE COULD CAUSE THE MOWER TO MOVE AND LEAVING THE SAFETY KEY INSERTED COULD ALLOW UNAUTHORIZED USE THAT COULD RESULT IN SEVERE PERSONAL INJURY.

CUTTING HEIGHT ADJUSTMENT LEVER

- Lifts or lowers the Cutting Blade Deck and thereby adjusts the grass cutting height.
- There are seven positions for this lever (shown as 1 to 7 on the label), which correspond to various heights between 1.18 – 4.33 inches (30 - 110 mm).

NOTE THE ELECTRIC ZERO TURN MOWER'S CUTTING DECK IS SET IN THE HIGHEST CUTTING HEIGHT WHEN IT IS SHIPPED. BEFORE USING THE MOWER, THE OPERATOR SHOULD ADJUST THE DECK HEIGHT TO THE CUTTING POSITION BEST SUITED FOR THE LAWN.

1. To lower the cutting height, grasp the Deck-Height Adjustment Lever and move it inwards to disengage it from the slot. Move it downward and engage it into the slot when it arrives at the desired cutting height.
2. To raise the cutting height, grasp the Deck-Height Adjustment Lever and move it inwards to disengage it from the slot. Move it upward and engage it into the slot when it arrives at the desired cutting height.

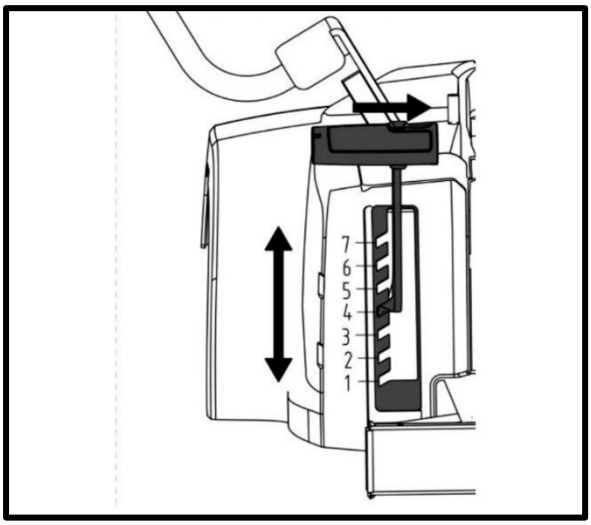

NOTE PRIOR TO MOWING, THE DECK SHOULD BE ADJUSTED TO A SUFFICIENT HEIGHT TO AVOID STUMPS, ROCKS, OR OTHER OBSTACLES THAT CAN DAMAGE THE MOWER DECK.

⚠ DANGER! NEVER ATTEMPT TO MAKE ANY ADJUSTMENTS TO THE MOWER DECK WHILE THE MOWER IS DRIVING OR THE CUTTING BLADE IS ENGAGED. THE MOWER BLADES CANNOT BE SEEN AND ARE LOCATED CLOSE TO THE CUTTING DECK HOUSING. FINGERS AND TOES CAN BE CUT OFF INSTANTLY.

⚠WARNING! HOLD THE DECK-HEIGHT ADJUSTMENT LEVER FIRMLY WHEN SETTING THE DECK HEIGHT AND ONLY RELEASE WHEN IT IS SECURELY ENGAGED IN THE DESIRED SLOT. QUICKLY LETTING GO OF THE LEVER MAY CREATE A PINCHING OR PULLING HAZARD TO THE OPERATOR'S HAND.

NOTE MAKE SURE THAT THE BATTERIES HAVE BEEN REMOVED FROM THE MOWER BEFORE MAKING ANY ADJUSTMENTS.

CENTER CONSOLE

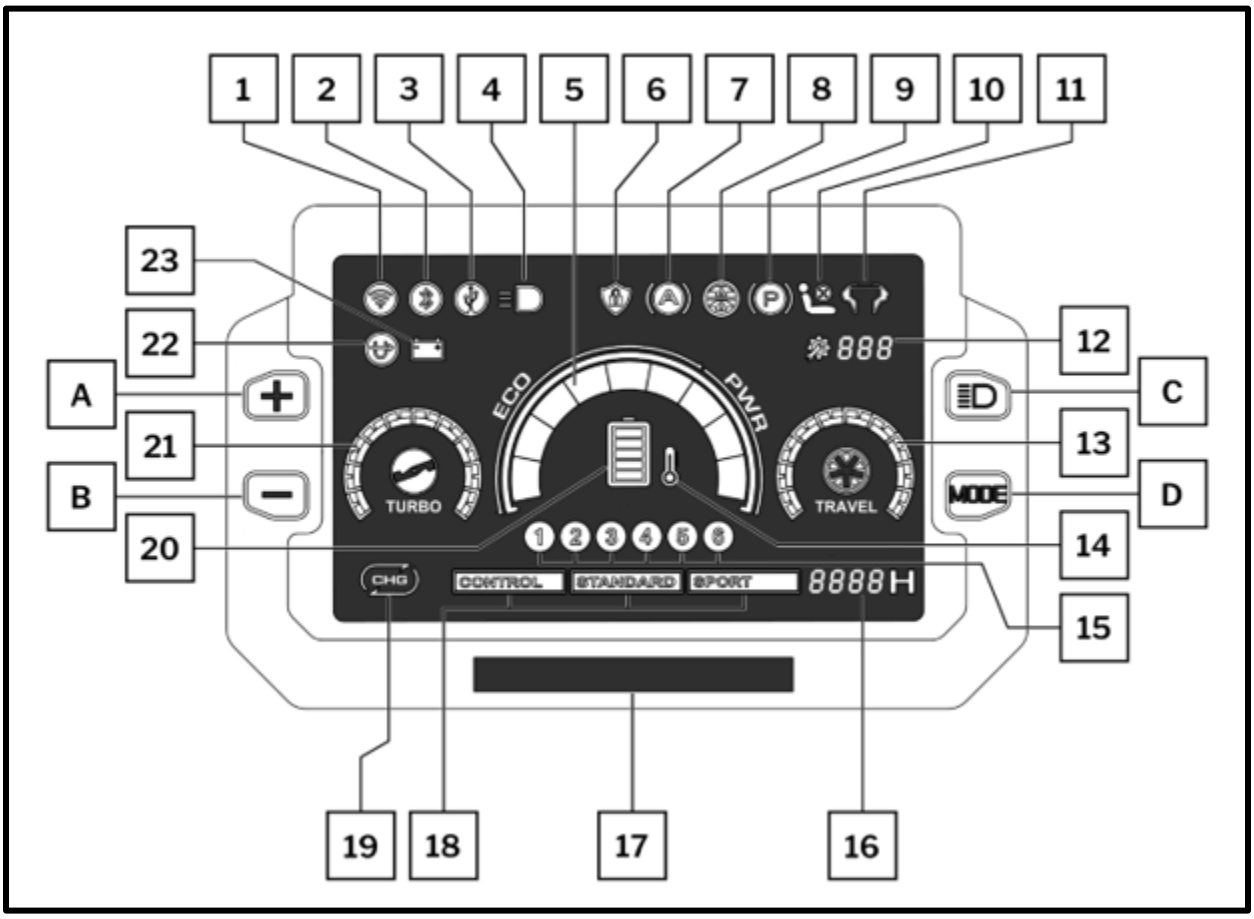

LCD ICONS

1. **WIFI**
The icon lights continuously blue when the WIFI function is engaged.

2. **BLUETOOTH**
The icon lights continuously blue when the Bluetooth function is engaged.

3. **USB**
The icon lights continuously blue to indicate that a USB device is functional. This only occurs after the mower has been started correctly.

4. **LED HEADLIGHTS**
The icon lights continuously blue to indicate that the LED headlights have been turned on.

5. LOAD INDICATOR

The bar graph's segments light continuously green to indicate the current workload of the mower.

- When the bar graph is in the ECO range, the mower is under normal load.
- When the bar graph is in the PWR range, the mower is under heavy load.

6. SAFETY KEY

The icon lights continuously red to indicate when the safety key is correctly inserted.

- Before operating the mower, once the operator is seated the safety key icon will keep flashing as a warning to instruct the operator to insert the safety key.

7. AUTO-PARKING

The icon lights flash continuously red, and the beeping indicator will sound to indicate when the auto-parking function is engaged.
The icon will turn off, and the beeping indicator will no longer sound to indicate that the park- brake pedal has been placed in the braking position.

The auto-parking function will engage using battery power when all the following occurred:

- The operator stops driving on a slope.
- The operator opened the steering levers.
- The operator is off the seat without setting the park-brake pedal at the braking position.

Set the park-brake pedal in the braking position. The auto-parking icon will be off, and the beeping indicator will no longer sound.

WARNING! WHEN THE BATTERY POWER IS DEPLETED, THE MOWER CAN SLIDE DOWN THE SLOPE, WHICH MAY CAUSE SERIOUS MOWER DAMAGE OR PERSONAL INJURY!

8. PTO SWITCH

The icon lights continuously green to indicate when the PTO switch is engaged. The icon lights will turn off to indicate when the PTO switch is disengaged.

9. BRAKE

The icon lights continuously red to indicate when the brake is engaged. The icon lights will turn off to indicate when the brake is disengaged.

10. SEAT
The icon lights continuously red to indicate when the operator is sitting in the seat.
The icon lights will turn off to indicate when the operator has left the seat.

11. STEERING LEVER
The icon flashes continuously red to instruct the operator to reset the steering levers to the open position and/or to release the parking brake.

12. FAULT CODE INDICATOR

NOTE THE ON-BOARD COMPUTER SYSTEM WILL TAKE ACTION TO PROTECT THE OPERATOR AND THE MACHINE WHEN IT DETECTS AN ISSUE.

- When the computer requires that the machine or a component be turned off, the icon lights continuously red to indicate that a fault has occurred, and a fault code will be shown on the LCD screen.
- Please see the FAULT CODE & STATUS INDICATOR REFERENCE section in this manual for reference.

13. TRAVEL SPEED SCROLL BAR
The bar graph's segments light continuously white to indicate the current driving speed.

14. BATTERY TEMPERATURE WARNING
The icon lights continuously red to indicate when the temperature of the battery pack is too high. The icon is not lit when the temperature of the battery pack is normal.

15. BATTERY PACK INSERTION SELECTION
The corresponding battery bin icon lights continuously white to indicate when a battery pack is inserted into the battery bin.
Refer to Figure 18.

16. HOUR METER
The icon lights continuously white to indicate the total driving time of the mower in hours. Use the hour meter to determine when the mower has reached the recommended service intervals outlined in the MAINTENANCE TABLE.
The hour meter cannot be reset.

17. HORIZONTAL LED
The LED lights continuously red to indicate an engaged brake or a fault.
The LED lights continuously green to indicate the machine is functionally normal.

18. DRIVING MODE

The corresponding icon lights continuously white to indicate the current of three driving modes options.

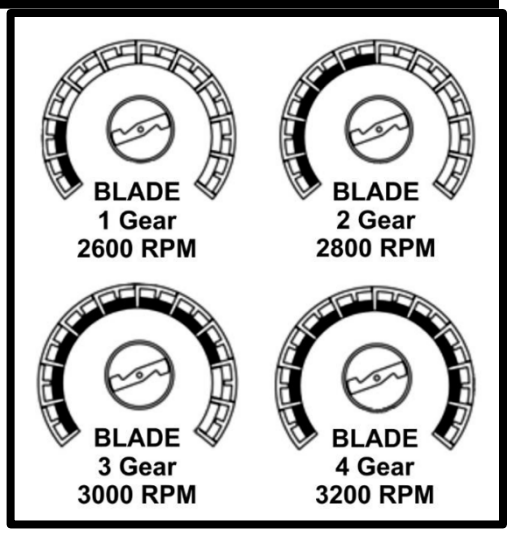

NOTE THE DRIVING MODE CAN ONLY BE SET WHEN THE MACHINE IS STOPPED. THE DRIVING MODE IS LOCKED DURING DRIVING OPERATIONS.

- Place the steering levers in the neutral position as outlined in DRIVING THE ELECTRIC ZERO TURN MOWER.
- Use the Mode Button (D) to set the desired driving mode.
  - CONTROL MODE: 3.7 MPH (6 km/h)
  - STANDARD MODE: 5.6 MPH (9 km/h)
  - SPORT MODE: 7.4 MPH (12 km/h)

19. BATTERY CHARGING

NOTE WHEN THE CHARGER IS INSERTED INTO THE MACHINE'S CHARGING PORT IT WILL FIRST CONDUCT A SELF-CHECK PROCEDURE AND THEN BEGIN TO CHARGE THE BATTERIES.

- The battery charging icon (CHG) will flash continuously green to indicate that the system is in the charging mode.
- When the batteries are fully charged, the charging icon (CHG) lights continuously, and all the bars within the battery power level icon (20) will be lit indicating full capacity.

20. BATTERY POWER LEVEL

- The green bars light continuously indicate the combined batteries power level in real time.
- The red icon bar lights continuously indicate low battery power level.

21. BLADE SPEED SCROLL BAR

The bar graph's segments are continuously light white to indicate the current blade speed.

22. BATTERY WARNING

The icon lights continuously red to indicate a battery fault.

23. LOW BATTERY CHARGE

The icon flashes continuously red to indicate a low battery level charge.

CENTER CONSOLE BUTTONS

THE MOWING SYSTEM HAS FOUR SPEED SETTINGS AND THE MOWING GEAR IS SELECTED THROUGH THE "+" AND "-" BUTTONS ON THE INSTRUMENT PANEL.

A. INCREASE GEAR SETTING

Press the "+" button to change the gear setting from 1 to 4.

B. DECREASE GEAR SETTING

Press the "+" button to change the gear setting from 4 to 1.

C. LED HEADLIGHTS

- Press this button to turn the LED headlights ON and the LED lights Icon (4) will light continuously.
- When the key is pressed again the LED headlights will turn OFF and the LED lights Icon (4) will turn off.

D. MODE

- Put the left and right steering levers in reset.
- Use the Mode Button (D) to set the desired driving mode.
  - CONTROL MODE: 3.7 MPH (6 km/h)
  - STANDARD MODE: 5.6 MPH (9 km/h)
  - SPORT MODE : 7.4 MPH (12 km/h)

The corresponding icon (18) lights continuously white to indicate the current of three driving modes options.

NOTE THE MACHINE RESETS TO STANDARD MODE EVERY TIME YOU POWER ON.

8. OPERATIONS

PRELIMINARY

Before starting to mow, it is necessary to conduct several checks and operations to ensure you can work efficiently and in maximum safety.

BATTERY CHECK

- Charge the batteries fully before using the machine for the first time after purchase.
- Always check the battery charge status before using the machine.

PARKING BRAKE

The Parking Brake is located at the front of the machine.

Refer to Figure 14.

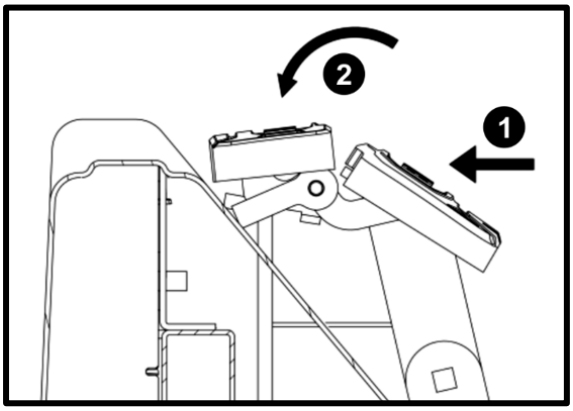

TO SET THE PARKING BRAKE:

1. Place the steering levers (1A, 1B) in the open position.
2. Fully depress and hold the brake pedal (2).
3. Press your foot forward and fully depress the parking brake (3) with the front of your foot.
4. Release the brake pedal.

To release the parking brake:

1. Depress and release the brake pedal.

⚠ WARNING! NEVER LEAVE A POWERED MACHINE RUNNING AND UNATTENDED. ALWAYS DISENGAGE THE BLADE START / STOP KNOB, STOP THE MOWER, SET THE PARKING BRAKE AND REMOVE THE KEY TO PREVENT UNINTENDED STARTING.

NOTE THE PARKING BRAKE MUST BE ENGAGED WHENEVER THE OPERATOR LEAVES THE SEAT.

TIRE PRESSURE

Having the right tire pressure is important for ensuring that the cutting deck and blades are horizontal and mow evenly.

1. Unscrew the protective caps.
2. Connect a compressed air line with a gauge to the valves.
3. Adjust the pressure according to the values indicated in the PRODUCT SPECIFICATIONS on page 2.

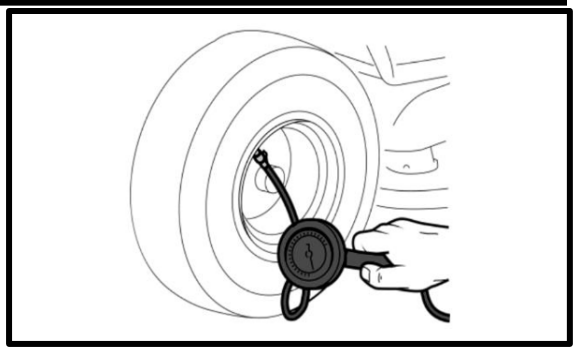

Refer to Figure 15.

RECOMMENDED TIRE PRESSURES:

FRONT 20 PSI / 1.4 bar (11 x 4.0 - 5)
REAR 14.4 PSI / 1 bar (18 x 8.5 - 8)

SEAT ADJUSTMENT

Adjust the seat position to ensure you can make firm contact with the brake pedal before operating the mower.

TO MOVE THE SEAT:

1. Push the seat adjustment lever (1) upwards.
2. Slide the seat (2) forward or backward to adjust to a comfortable position.

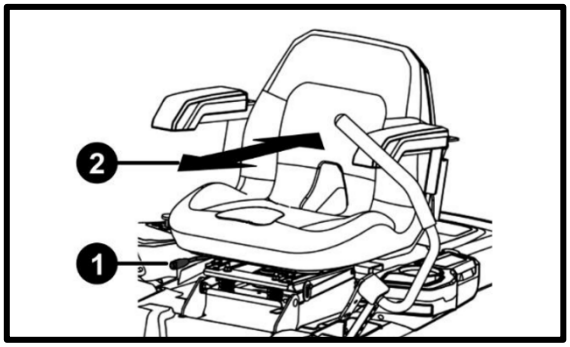

BE SURE THE SEAT IS LOCKED INTO PLACE BEFORE OPERATING THE MOWER. A SEAT THAT IS NOT SECURE CAN CAUSE THE OPERATOR TO SHIFT AND LOSE CONTROL OF THE MOWER AND RESULT IN POSSIBLE DEATH OR SEVERE PERSONAL INJURY.

SAFETY CHECKS

Run the following safety checks and ensure that the results correspond to those outlined in the tables.

- PREPARE THE MACHINE BEFORE STARTING WORK: Make all appropriate adjustments before starting based on how the lawn is to be mowed.
- VERIFY MOWER CONDITION: Inspect the entire product for damaged, missing, or loose parts such as screws, nuts, bolts, caps, etc. Tighten securely all fasteners and caps and do not operate this product until any missing or damaged parts are replaced.

ALWAYS PERFORM SAFETY CHECKS BEFORE USE.

GENERAL SAFETY CHECK

Object	Result
Batteries.	No damage to casing and cover.
Pushbutton panel controls and commands.	Good condition. No damage.
Rear unload guard, grass catcher.	Good condition. No damage. Professionally installed.
Electrical cables	All insulation intact. No mechanical damage.
Operate the machine forwards / reverse and return the drive levers to neutral.	The machine slows down and stops.
Safety devices	Proceed as indicated

TESTING THE SAFETY INTERLOCK SYSTEM

The mower incorporates a separate seat switch that will stop the drive motors and deck motors when the operator is unseated while the mower is operating. This safety feature is designed to prevent runaway or accidental entanglement.

TEST THE SYSTEM TO ENSURE THAT IT IS WORKING CORRECTLY.

1. Position the mower on a level surface.
2. The operator must be on the seat when testing the seat switch.
3. Release the parking brake pedal.
4. Insert the safety key into the mower and press the Start / Stop button for five seconds to power the machine and illuminate the LCD screen.
5. Pull the PTO switch upward to engage the blade motors.
6. Slowly raise yourself off the seat, but do not get off the mower. The deck-blade system should stop.

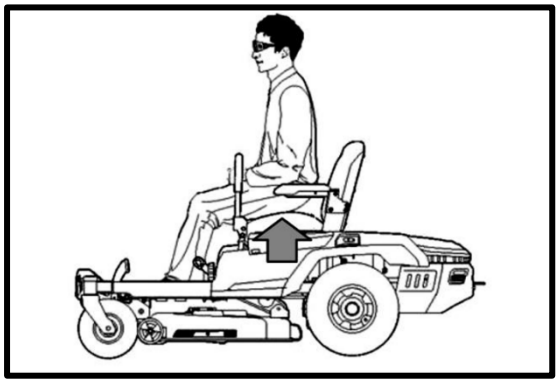

⚠ CAUTION! IF THE DECK-BLADE SYSTEM FAILS TO STOP WHEN THE OPERATOR IS OFF OF THE SEAT AND IF THE CAUSE CANNOT BE DETERMINED AFTER CONFIRMING THE PLUG AND SOCKET CONNECTION OF THE SEAT IS WELL CONNECTED, CONTACT YOUR PRORUN CUSTOMER SERVICE IMMEDIATELY.

⚠ WARNING! DO NOT OPERATE THE MOWER UNTIL THE SAFETY INTERLOCK SYSTEM HAS BEEN REPAIRED BY A PRORUN-APPROVED SERVICE TECHNICIAN.

7. If the blades stopped rotating when the operator left the seat, return to the sitting position, and push the PTO switch downward to disengage the blade motors.
8. Adjust the steering levers from electric park brake position to neutral position.
9. To operate the machine, adjust the steering levers forward or backward to drive the mower; refer to “DRIVING THE MOWER” in this manual.

⚠ CAUTION! ALWAYS PERFORM SAFETY CHECKS BEFORE EVERY USE.

DRIVING & TRANSPORT ON PUBLIC ROADS

Check the relevant road traffic regulations before driving the machine on a public road. When transporting the machine on another vehicle, always use approved security devices and make sure that the machine is secure.

OPERATION ON SLOPES

⚠ WARNING! ONLY MOW ON SLOPES WITH GRADIENTS UP TO THE MAXIMUM AS LISTED IN THIS OPERATOR'S MANUAL.



Slopes are a major factor related to loss of control and tip-over accidents, which can result in severe injury or death. All slopes require extra caution. If you cannot back up the slope, or if you feel uneasy on it, do not mow it.

For your safety, use the slope gauge included as part of this manual to measure slopes before operating this machine on a sloped or hilly area. If the slope is greater than 15-degrees as shown on the slope gauge, do not operate this machine in that area or a severe injury could result.

⚠ DANGER! RISK OF OVERTURNING ON STEEP GRADIENTS.

⚠ DANGER! REDUCE SPEED BEFORE ANY CHANGE OF DIRECTION ON SLOPES! USE THIS SLOPE GAUGE TO DETERMINE IF A SLOPE IS TOO STEEP FOR SAFE OPERATION!

Comply with the limits indicated in the GENERAL SAFETY REGULATIONS / DESIGNATED regardless of the mowing direction.

- Remember there is no such thing as a "safe" slope.
- Driving on grassy slopes requires particular care.
- To prevent overturning or loss of control over the machine:
  - Never mow across the face of the slope.
  - Lawns on slopes must be mowed by moving up and down and never cross them in forward gear.
  - When changing direction, take great care that the wheels facing the slope do not hit any obstacles (such as stones, branches, roots, etc.) that may cause the machine to slide sideways, tip over, or make you lose control.
- Do not stop or start suddenly when going up or downhill.

- Shift into drive gear very gently, paying particular attention to prevent the machine from tipping up.
- Reduce speed:
    - Before changing direction and during tight turns.
    - Before tackling a slope, especially downhill, to ensure a safe braking distance.

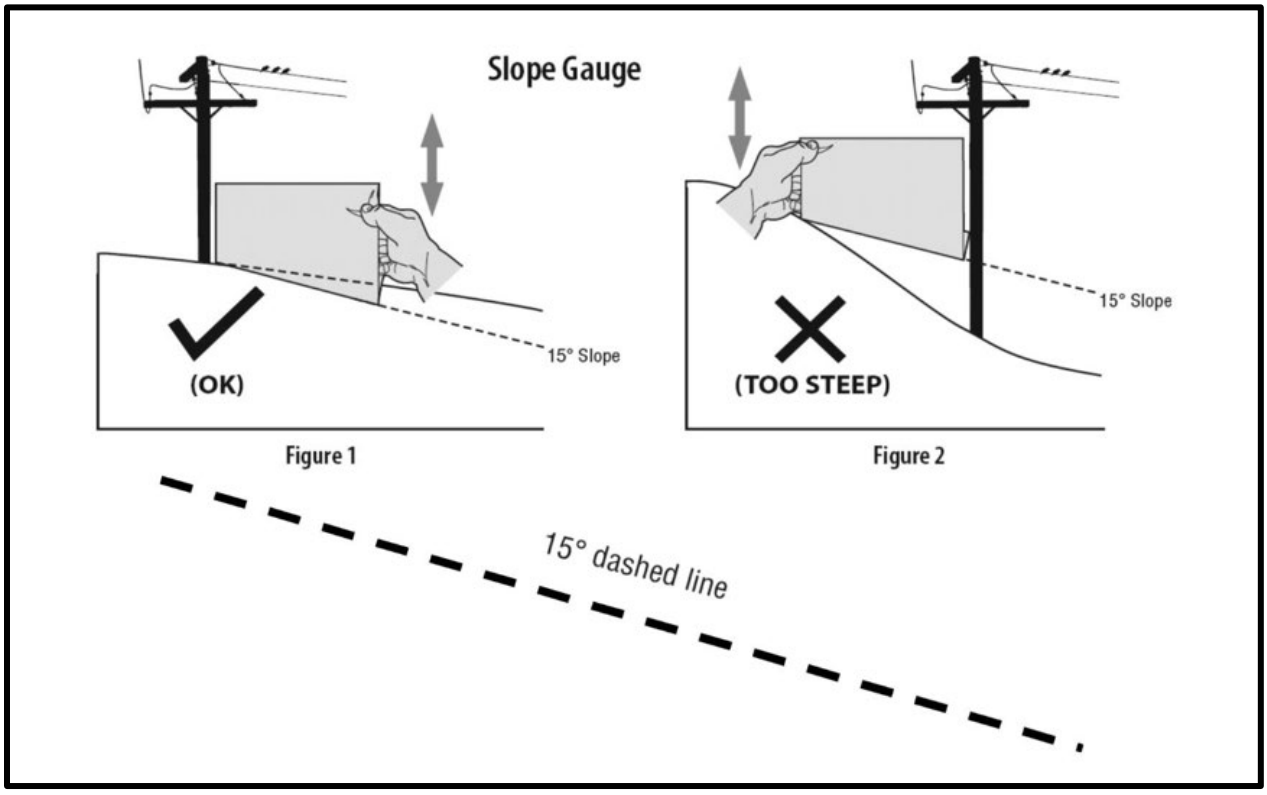

TO CHECK THE SLOPE, PROCEED AS FOLLOWS:

1. Remove this page and fold along the dashed line.
2. Locate a vertical object on or behind the slope (e.g., a pole, building, fence, tree, etc.).
3. Align either side of the slope gauge with the object (see Figure 1 and Figure 2).
4. Adjust gauge up or down until the left corner touches the slope (see Figure 1 and Figure 2).
5. If there is a gap below the gauge, the slope is too steep for safe operation (see Figure 2 above).

SLOPES ARE A MAJOR FACTOR RELATED TO TIP-OVER AND ACCIDENTS WHICH CAN RESULT IN INJURY OR DEATH. DO NOT OPERATE THE MACHINE ON A SLOPE GREATER THAN 15°. ALL SLOPES REQUIRE EXTRA CAUTION.

DO:

- Mow either up or down on a slight diagonal to reduce the possibility of slipping and rolling. It is recommended to avoid mowing across the face of slopes.
- Exercise extreme caution when changing direction on slopes.
- Watch for holes, ruts, bumps, rocks, or other hidden objects. Uneven terrain could overturn the machine. Tall grass can hide obstacles.
- Use slow speed. If the Mower must be stopped on the slope, please choose a speed as low as possible. Avoid starting or stopping on the slope. If the tires are unable to maintain traction, disengage the blades and proceed slowly and carefully straight down the slope.
- Use extra care with any attachments. These can change the stability of the machine.
- Keep all movement on the slopes slow and gradual. Do not make sudden changes in speed or direction. Rapid acceleration or deceleration could cause the front of the machine to lift and rapidly flip over backwards, which could cause severe injury.
- Avoid stopping on a slope if possible. If stopping on a slope is unavoidable, make sure to engage the parking brake. When restarting, use the lowest possible speed. If turning is necessary, exercise extreme caution when changing direction and always turn downhill.

DO NOT:

- Turn on slopes unless necessary; then turn slowly uphill and take extra care while turning.
- Mow near drop-offs, ditches, or embankments. The mower could suddenly turn over if a wheel is over the edge of a cliff, ditch, or if an edge caves in.
- Try to stabilize the machine by putting your foot on the ground.
- Operate the mower in the rain or in wet areas.
- Mow on wet grass. Reduced traction could cause sliding.
- Haul or tow heavy pull-behind attachments (e.g., loaded dump cart, lawn roller, etc.) on slopes greater than 5 degrees. When going downhill, the extra weight tends to push the mower and may cause you to lose control (e.g., mower may speed up, the braking and steering ability can be reduced, or the attachment may jack-knife and cause mower to overturn).
- Turn the power and key OFF and coast downhill.

START-UP

TO START THE MACHINE:

1. Sit in the operator's position.
2. Fully insert the key.
3. Wait for the machine's electrical check to be performed, during which the icons on the pushbutton panel will flash.
4. Press the Start / Stop power button.

NOTE AT THE END OF THE ELECTRICAL CHECK, THE LED TURNS ON MOMENTARILY.

⚠ DANGER! NEVER MAKE SUDDEN STOPS OR SUDDEN DIRECTION REVERSES, ESPECIALLY WHEN MANEUVERING ON A SLOPE. THE STEERING LEVERS ARE DESIGNED FOR SENSITIVE RESPONSE. RAPID MOVEMENT OF THE STEERING LEVERS IN EITHER DIRECTION COULD RESULT IN A REACTION OF THE MOWER THAT CAN CAUSE SEVERE INJURY.

TO STOP THE MACHINE:

1. Return the steering levers to the neutral position.
2. Push the PTO switch downward to disengage the deck motors / mower's cutting blades.
3. Open the steering levers outward into the stop position.
4. Set the parking-brake pedal to the braking position.
5. Press the Start / Stop power button for more than 3 seconds to turn off the mower.

NOTE AFTER MORE THAN 3 MINUTES WITHOUT OPERATING, THE MOWER WILL AUTOMATICALLY SHUT OFF.

6. Remove the safety key from the mower and keep it in a safe place.

⚠ WARNING! DO NOT STOP THE MOWER ON A SLOPE. ALWAYS STOP THE MOWER ON A FLAT, LEVEL SURFACE AND NEVER LEAVE THE MOWER UNATTENDED WITH THE SAFETY KEY INSERTED, EVEN FOR JUST A BRIEF PERIOD. LEAVING THE KEY UNATTENDED MAY ALLOW UNAUTHORIZED USE THAT COULD RESULT IN SERIOUS PERSONAL INJURY.

⚠ WARNING! WHEN THE MOWER IS STOPPED ON A SLOPE AND THE OPERATOR IS OFF THE SEAT WITHOUT SETTING THE PARK BRAKE PEDAL, THE BEEPING INDICATOR WILL SOUND CONTINUOUSLY TO REMIND THE OPERATOR TO SET THE PARK BRAKE BEFORE LEAVING THE MOWER. ALWAYS SET THE PARK BRAKE PEDAL AT THE BRAKING POSITION WHEN LEAVING THE SEAT. OTHERWISE, WHEN THE BATTERY POWER IS DEPLETED, THE MOWER WILL SLIDE DOWN THE SLOPE, WHICH MAY CAUSE SERIOUS MOWER DAMAGE OR PERSONAL INJURY!

DRIVING THE ELECTRIC ZERO TURN MOWER
AFTER STARTING THE MOWER, ENGAGE THE STEERING LEVERS AS FOLLOWS:

- To go forward, push steering levers forward at an equal distance.
- To go in reverse, pull steering levers rearward at an equal distance.
- To turn left, push the right steering lever farther from neutral than the left steering lever.
- To turn right, push the left steering lever farther from neutral than the right steering lever.
- To execute a zero-radius turn, first slow down, and then move one steering lever forward and the other steering lever back of neutral. This allows the rear drive wheels to counter rotate.

Fig 11

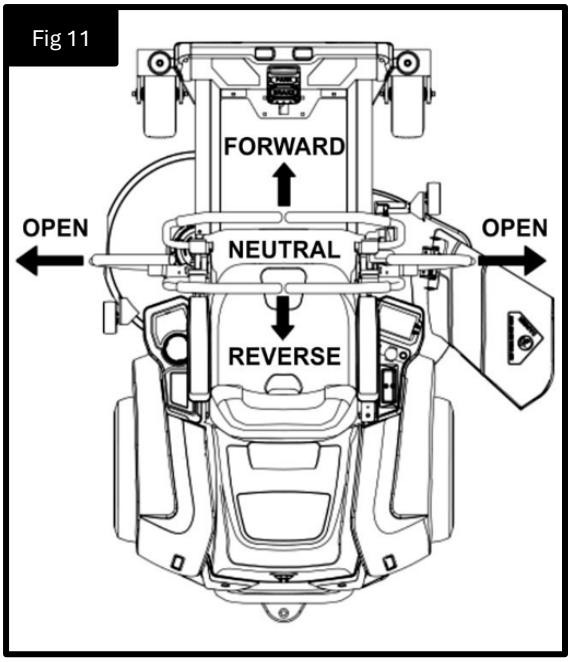

NOTE THE RAPID MOVEMENT OF STEERING LEVERS IS NOT RECOMMENDED AS DAMAGE TO THE ELECTRIC COMPONENTS OF THE MOWER MAY OCCUR.

NOTE AGGRESSIVE TURNING CAN SCUFF OR DAMAGE LAWNS. PERFORM ZERO TURNS AT LOW DRIVING SPEED. ALWAYS KEEP BOTH WHEELS ROTATING WHEN MAKING SHARP TURNS. DO NOT MAKE TURNS WITH THE INSIDE WHEEL COMPLETELY STOPPED. FOR MINIMUM TURNING RADIUS, REVERSE THE INSIDE WHEEL WHILE MOVING THE OUTSIDE WHEEL SLOWLY FORWARD.

- To stop or decrease speed, move the steering levers to neutral. When going forward, pull back gently on the steering levers. When going in reverse, push forward gently on the steering levers.
- To increase speed, increase the steering lever's distance from neutral. The farther forward the steering levers are from the neutral, the faster the mower will travel

Fig 12

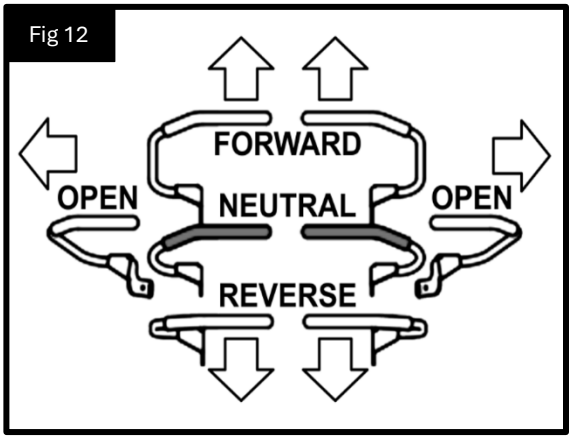

forward. The farther back the steering levers are from the neutral, the faster the mower will go in reverse.

Fig 13

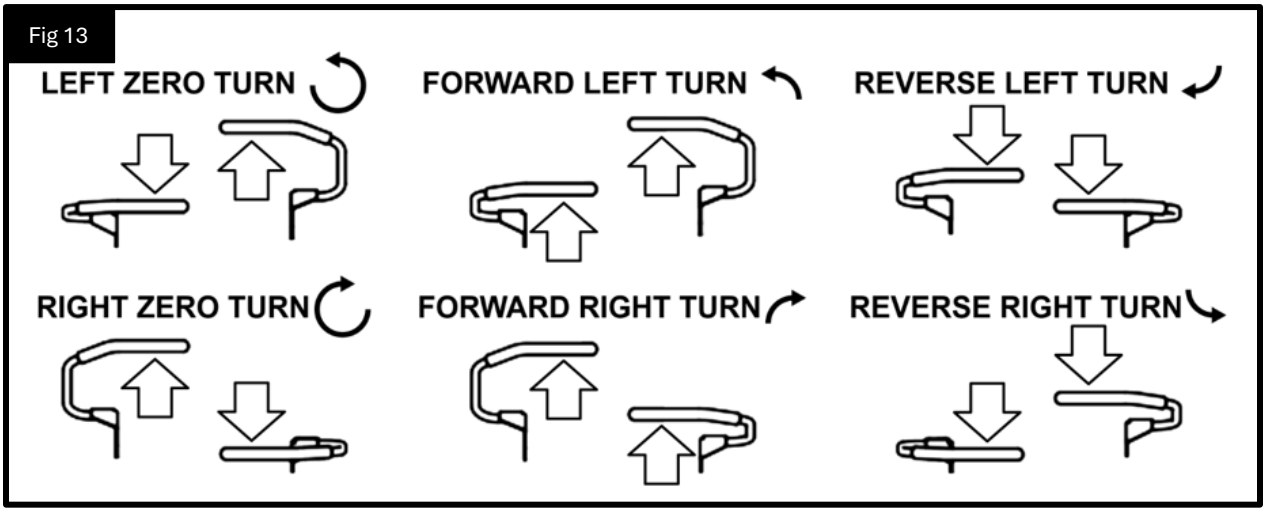

⚠ DANGER! STAY AT LEAST TWO MOWING WIDTHS (7FT) AWAY FROM ANY DITCHES, DROP-OFFS, OR WATER. FRONT WHEELS CAN ROTATE WHEN THE MOWER IS STOPPED, EVEN WITH THE BRAKE APPLIED, AND CAUSE THE MOWER TO GO OVER THE EDGE OR INTO THE WATER. THIS CAN RESULT IN DEATH OR SEVERE PERSONAL INJURY.

⚠ WARNING! BE AWARE OF WHAT IS BEHIND THE MOWER BEFORE BACKING UP. DO NOT MOW IN REVERSE UNLESS ABSOLUTELY NECESSARY. ALWAYS LOOK DOWN AND BEHIND BEFORE AND WHILE BACKING TO MAKE SURE NO CHILDREN, BYSTANDERS, OR PETS ENTER THE MOWING AREA. REMEMBER THAT A CARELESS FRACTION OF A SECOND IS SUFFICIENT TO INFLICT DEATH OR SEVERE INJURY.

⚠WARNING! BE CERTAIN YOU HAVE CORRECTLY SET YOUR INTENDED DIRECTION OF DRIVING WITH THE STEERING LEVERS BEFORE DEPRESSING THE PARKING BRAKE PEDAL. FAILURE TO DO SO COULD RESULT IN YOU DRIVE THE MOWER IN AN UNINTENDED DIRECTION, WHICH COULD CAUSE LOSS OF CONTROL OR AN ACCIDENT.

⚠ WARNING! BE CAUTIOUS WHEN CROSSING OVER GRAVEL PATHS OR DRIVEWAYS. BEFORE CROSSING, DISENGAGE THE BLADES AND RAISE THE CUTTING DECK TO THE HIGHEST POSITION TO MINIMIZE THE POSSIBILITY OF RICOCHET. DRIVE SLOWLY TO AVOID LOSS OF TRACTION AND CONTROL.

GRASS CUTTING

NOTE A SHARP BLADE WILL GREATLY ENHANCE THE PERFORMANCE OF THE MOWER, ESPECIALLY WHEN CUTTING TALL GRASS. MAKE SURE TO CHECK THE SHARPNESS OF THE BLADE BEFORE MOWING.

- Verify that the lawn is free of stones, sticks, wires, and other objects which could damage the mower's cutting blades or motors. Such objects could be

accidentally thrown by the mower in any direction and could cause serious personal injury to the operator and to others.

⚠ WARNING! IF YOU STRIKE A FOREIGN OBJECT, STOP THE MOTORS, AND REMOVE THE BATTERIES. THOROUGHLY INSPECT THE MOWER FOR ANY DAMAGE AND REPAIR THE DAMAGE BEFORE RESTARTING AND OPERATING THE MOWER. EXCESSIVE VIBRATION OF THE MOWER DURING OPERATION IS AN INDICATION OF DAMAGE. THE UNIT SHOULD BE PROMPTLY INSPECTED AND REPAIRED.

- The best mowing results are with a high cutting blade speed and low driving speed. If the grass is not too long and dense, the driving speed can be increased without negatively affecting the mowing result.
- When cutting heavy grass, reduce the driving speed to allow for a more effective cutting and a proper discharge of the clippings.
- Begin with a high cutting height and reduce it until the desired mowing result is attained. Grass over six-inches tall should be mowed twice, at successively lower cutting heights.
- To maintain a healthy lawn, cut off only one-third or less of the total length of the grass.

Fig 14

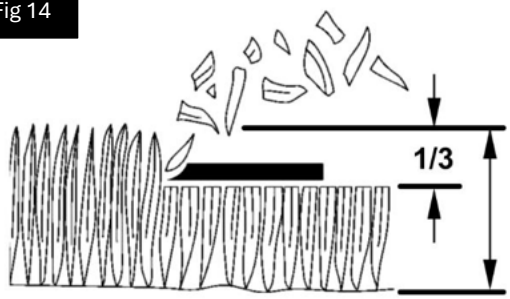

- The average lawn should be approximately 1-1/2 to 2 inches long during cool months, and between 2 to 3- 1/4 inches long during hot months.
- For healthier and better-looking lawns, mow more often after moderate growth. Refer to Figure 14.
- Do not cut wet grass. Mowing on wet surfaces can cause loss of control and the wheels to sink into the soft lawn. Wet grass will stick to the underside of the deck and prevent proper bagging or mulching of the grass clippings.
- New or thick grass may require a narrower cut or a higher cutting height.
- Keep the mower deck and side discharge chute clean. Remove grass clippings, leaves, dirt, and any other accumulated debris before and after each use. See section CLEANING THE MACHINE in this manual.
- When the mulching plug is installed, it is important to mow more frequently.

NOTE THE FORWARD DRIVE SPEED DECREASES IF THE BATTERY CHARGE THRESHOLD FALLS BELOW 40%.

NOTE THE APPEARANCE OF THE LAWN WILL IMPROVE IF YOU ALTERNATE CUTTING IN BOTH DIRECTIONS AT THE SAME HEIGHT. Refer to Figure 15.

Fig 14

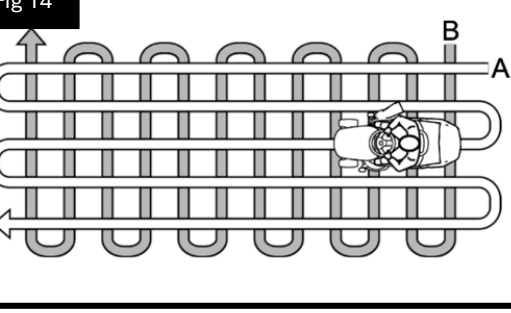

MOWING COMPLETED

WHEN MOWING HAS BEEN COMPLETED:

1. Place the steering levers in the Neutral position.
2. Disengage the blades' rotation (PTO).
3. Raise the cutting deck height to the highest position.

TO TURN THE MACHINE OFF:

1. Place the steering levers to the Neutral position.
2. Push the PTO switch downward to disengage the deck motors / mower's cutting blades.
3. Open the steering levers outward into the Stop position.
4. Set the parking-brake pedal to the braking position.
5. Press the Start / Stop button for more than three seconds to turn off the mower.
6. Turn the machine OFF by removing the key.

NOTE TO SAVE BATTERY POWER, DO NOT LEAVE THE KEY INSERTED WHEN THE MACHINE IS NOT IN USE.

AFTER USE

1. Allow the machine to cool before storing it in an enclosed space.
2. Clean the machine.
3. Make sure there are no loose or damaged components. If necessary, replace the damaged components and tighten any screws and loose bolts or contact a PRORUN-approved service center.
4. Position the machine near a power socket and charge the batteries so that it is ready to be used when next required.

NOTE ALWAYS LEAVE THE MACHINE IN A SHADED AREA OR SHELTERED ENVIRONMENT AT A TEMPERATURE BELOW +95 °F (+35 °C).

9. MAINTENANCE

GENERAL INFORMATION

BEFORE COMMENCING ANY INSPECTIONS, CLEANING, MAINTENANCE, OR ADJUSTMENTS ON THE MACHINE:

Disengage the blade rotation (PTO)

1. Stop the machine.
2. Make sure that all moving parts have come to a complete stop.
3. Remove the safety key.

⚠ DANGER! NEVER LEAVE THE SAFETY KEY INSERTED OR WITHIN REACH OF CHILDREN OR INAPPROPRIATE PEOPLE.

4. Read all relevant instructions.

5. Use suitable clothing, protective gloves, and goggles.

The frequency and type of procedures are outlined in the following MAINTENANCE TABLE. The table will help you maintain your machine's safety and performance. It summarizes the main interventions to be made and the frequency applicable to each of them. Conduct the relevant tasks as soon as they are scheduled to be performed. The use of non-genuine and / or incorrectly assembled spare parts and attachments could adversely affect the machine's operation and safety. The manufacturer shall decline all liability in the event of injuries or damage caused by such parts. Contact PRORUN Customer Service for spare parts and approved dealers / service centers information.

BATTERY

BATTTERY LIFE

The machine's run-time and the area of lawn that is mowed before the batteries require recharging can be affected by the following:

- Higher energy work requirements (e.g. cutting dense, tall, or humid grass).
- End-user's methods of operation:
    - Switching the machine ON and OFF frequently while working.
    - Setting a cutting height that is too low for the lawn conditions.
    - Working at a speed that is too high for the amount of grass to be removed.
- Environmental factors, such as a high ambient temperature above +95 °F (+35 °C).

To optimize the machine's runtime and the area of lawn that is mowed before the batteries require recharging, it is advisable to:

- Cut the grass when the lawn is dry.
- Cut the grass frequently so that it does not grow too tall.
- Set a higher cutting height when the grass is very tall, then set a lower height and cut the lawn a second time to achieve the desired height.
- Cut the grass at a temperature between +40 and +95 °F (+5 and +35 °C).

CHARGE BEFORE FIRST USE

NOTE IN ORDER TO START THIS MOWER, PRORUN BATTERIES TOTALING 20 AH (2 X PB160100) OR MORE ARE REQUIRED.

- For best performance, we recommend the use of PRORUN batteries that total 20 Ah or more.
- When not in use, PRORUN 60V battery packs should be stored in an enclosed area where the temperature will not drop below -4°F (-20°C).
- Optimal charging temperatures are between 40°F (5°C) and 104°F (40°C).

⚠ WARNING! IF ANY PARTS ARE BROKEN OR MISSING, DO NOT ATTEMPT TO ATTACH THE BATTERY PACKS TO THE MOWER OR OPERATE THE MOWER UNTIL THE

BROKEN OR MISSING PARTS ARE REPLACED. FAILURE TO DO SO COULD RESULT IN SEVERE INJURY.

INSTALLING THE BATTERY PACKS

1. Turn Power Unit Cover Release Button (1) Clockwise Refer to Figure 16.
2. Open the Power Unit Cover Refer to Figure 17.

Fig 16

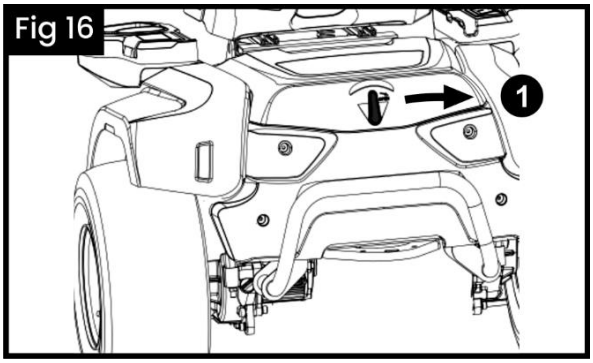

Fig 17

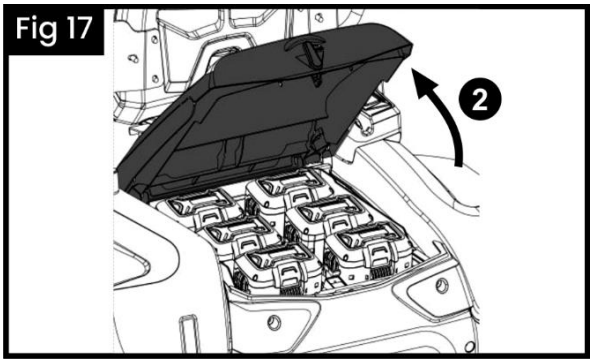

NOTE IF THE POWER UNIT COVER CANNOT BE FULLY OPENED, MOVE THE SEAT FORWARD OR FLIP THE SEAT.

3. The PRORUN Zero Turn electric lawn mower is equipped with six battery compartments to accommodate up to six battery packs at the same time.

Refer to Figure 18.

Fig 18

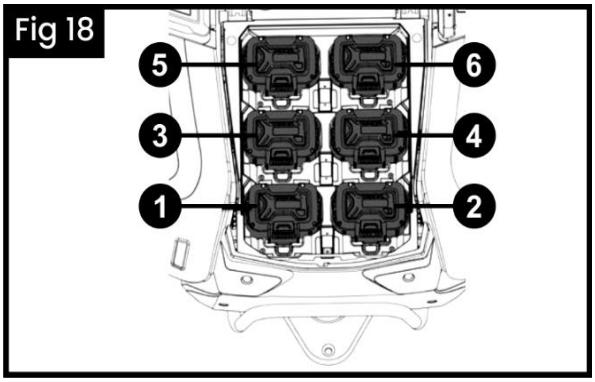

4. Align the grooves in the battery pack with the raised ribs in the battery compartment and then insert the battery pack into the compartment.
5. Lightly push the battery pack downward until you hear a “click”. The battery- release button will spring up when the battery pack is securely attached.
6. Attach more battery packs into the remaining battery compartments in the same manner.

Refer to Figure 19

Fig 19

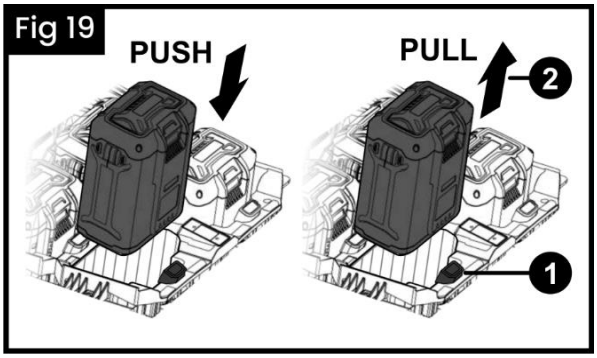

REMOVING THE BATTERY PACKS

1. Open the battery holder cover.
2. Depress the battery-release button (1) to detach the battery pack. The battery pack will spring upward lightly as illustrated in Figure 19 (2) PULL.
3. Lightly lift the battery pack out of the compartment.
4. Close the battery holder cover.

BATTERY CHARGING

The machine battery must always be charged:

- Before using the machine for the first time after purchase.
- When the minimum state of charge is reached.
- After every two months of storage.
- Before starting up the machine after a prolonged period of inactivity.

CHARGE STATUS (SOC)	LED INDICATOR
SOC > 80%	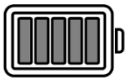
60% ≤ SOC < 80%	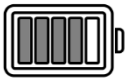
40% ≤ SOC < 60%	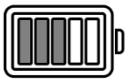
20% ≤ SOC < 40%	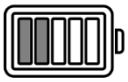
10% ≤ SOC < 20%	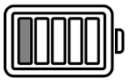

NOTE WHEN THE BATTERY IS NOT CONNECTED TO A PRORUN BATTERY CHARGER, THE BATTERY'S CHARGE WILL GRADUALLY LOSE POWER EVEN IF THE BATTERY IS NOT USED.

If the battery is subject to a deep discharge, it could be seriously damaged to the point that it can no longer be used.

The warranty does not cover damage caused by batteries not charged at regular intervals.

NOTE RECHARGING MUST BE CONDUCTED EXCLUSIVELY UTILIZING A PRORUN EXTERNAL BATTERY CHARGER.

Other recharging systems can irreversibly damage the batteries.

BATTERY CHARGING GUIDELINES

- Use only the battery charger provided with this mower or an approved PRORUN external charger.
- The batteries should be fully charged before each use.
- It is recommended that the mower batteries are charged once every month during off-season storage.
- It will take approximately 10 hours to fully charge the batteries. Leaving the batteries connected to the charger for more than 10 hours will not damage the batteries.
- The batteries do not develop a memory and do not need to be fully discharged before recharging.

- Always disconnect the battery charger (or extension cord, if used) from the electrical outlet first, then disconnect the charging cord from the charging port.
- It is recommended that the mower be charged after each use.
- Storing batteries in a discharged state could reduce future performance.

RECHARGING ENVIROMENT

NO.	ITEMS	TECHNICAL INDICATOR
1	Nominal Working Temperature	77 ° F (25° C)
2	Working Temperature Range	41° - 104°F, (5° - 40°C)
3	Storage Temperature	14° - 113°F, (-10° - 45°C)
4	Relative Humidity	45% to 75%
5	Altitude	Below 6560 feet (2000 m)

NOTE THE BATTERIES MUST ONLY BE CHARGED IN AN AREA PROTECTED AGAINST POOR WEATHER CONDITIONS, IN THE SHADE, AT A RECOMMENDED TEMPERATURE OF BETWEEN +40° TO +105° F (+5° TO +40° C).

The batteries are equipped with a device that inhibits recharging if the environmental temperature is not between +32° and 115° F (+0° and +45° C).

NOTE THE BATTERY CAN BE CHARGED AT ANY TIME, EVEN PARTIALLY, WITH NO RISK OF DAMAGING IT.

⚠ WARNING! DO NOT CARRY OUT MAINTENANCE OR CLEANING OPERATIONS WHILE THE BATTERY IS CHARGING.

CHARGING THE BATTERY ON-BOARD
To charge the battery:

1. Position the machine and the supplied battery charging unit (1) close to a power outlet and remove the safety key.
2. Lift the cap on the recharging socket (3) under front of the seat.

Refer to Figure 20.

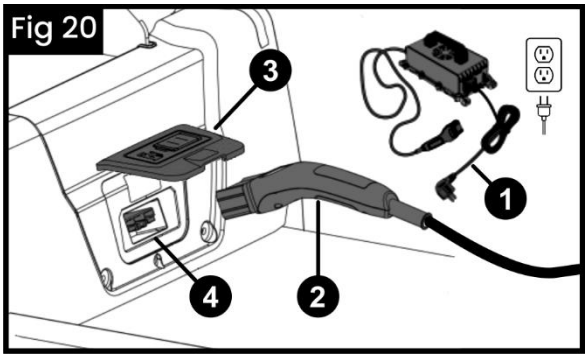

3. Connect the supplied battery charging unit recharging socket's bayonet mount (2) to the recharging socket (3).
4. Connect the battery charger to a grounded / earthed electrical socket by inserting its plug.
5. The BATTERY POWER LEVEL icon on the Center Console LCD screen will depict the charge (5).

Refer to Figure 21.

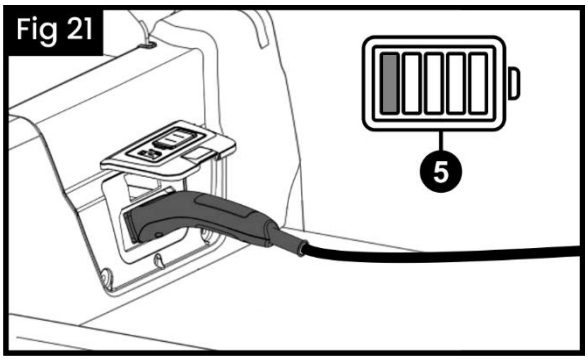

NOTE BATTERY CHARGING TIMES MAY INCREASE IF THE MACHINE HAS BEEN USED IN HEAVY-DUTY WORK CONDITIONS WITH CONSEQUENT INDICATION OF BATTERY OVERHEATING.

NOTE THE BATTERIES CAN BE KEPT UNDER CHARGE INDEFINITELY.

NOTE DURING RECHARGING, THE BATTERY INDICATOR LED BAR GRAPH WILL INCREASE PROGRESSIVELY.
When each individual charge threshold is reached, the respective LEDs will remain constantly lit, while the other LEDs will continue to flash.
Refer to Figure 22

NOTE THE VEHICLE-MOUNTED RECHARGEABLE BATTERY IS CHARGED FROM LOW TO HIGH ACCORDING TO THE ELECTRIC QUANTITY. IT IS THEREFORE ADVISABLE ALWAYS TO CONDUCT A COMPLETE CHARGING.

NOTE WHEN THE CHARGE LEVEL DROPS BELOW THE 30% THRESHOLD, THE FIRST TWO LEDS BEGINS FLASHING. BELOW THE 10% THRESHOLD, THE FIRST BATTERY LED BEGINS FLASHING RAPIDLY AND THE CUTTING MEANS DISENGAGE. STOP MOWING AND RETURN TO BASE TO RECHARGE THE BATTERIES.

NOTE WHILE CHARGING, ALL MACHINE FUNCTIONS ARE DISABLED, EVEN WHEN THE KEY IS FULLY INSERTED.

THE BATTERIES MOUNTED ON THE MACHINE ARE DESIGNED AND MANUFACTURED FOR THIS TYPE OF USE.

- DO NOT replace the batteries with other non-original batteries.
- DO NOT conduct interventions unless they have been indicated in this manual.
- In the event of any problems with the batteries, contact PRORUN Customer Service.

CLEANING

CLEANING THE MACHINE

Thoroughly clean the machine every time it is used:

1. Clean the outside of the machine by washing the plastic parts of the bodywork with a damp cloth. DO NOT wet the electric motors, the batteries, or any parts of the electrical system.
2. To reduce the risk of fire, keep the motors and battery housing free of grass, leaves, residues, or excessive grease.
3. Keep the push button panel free of dirt and debris.

NOTE NEVER USE HIGH PRESSURE WATER OR AGGRESSIVE FLUIDS TO WASH THE BODYWORK AND ELECTRIC MOTORS.

CLEANING THE CUTTING DECK AND BLADES

Your mower's cutting deck is equipped with a water port as part of its deck wash system. Use the smart jet to rinse grass clipping from the deck's underside to prevent the buildup of corrosive chemicals.

Complete the following steps after each mowing:

1. Drive the mower to a level, clear location on your lawn, close enough for your garden hose to reach.

⚠ CAUTION! MAKE CERTAIN THE MOWER'S DISCHARGE CHUTE IS DIRECTED AWAY FROM YOUR HOUSE, GARAGE, PARKED CARS, ETC.

2. Stop the mower, disengage the blades, set the parking brake, and disconnect all power accessories.
3. Thread the end of your garden hose onto the hose coupler.

Fig 22

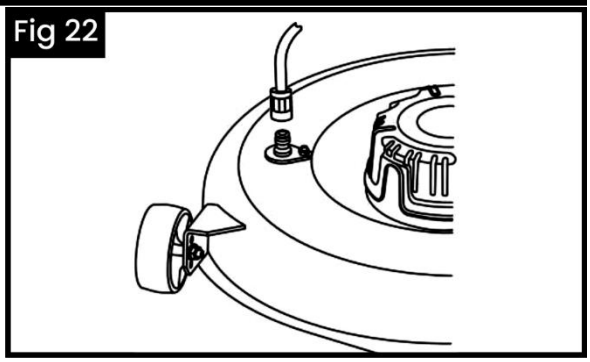

NOTE Contact PRORUN Customer Service if an adapter is required.

4. Attach the hose and coupler to the water port on the cutting deck.

Refer to Figure 22.

5. Turn the water on.
6. While sitting in the operator's position, start the mower as instructed in OPERATIONS of this manual.
7. Engage the blades utilizing the PTO knob.
8. Remain in the operator's position for a minimum of two minutes, allowing the underside of the cutting deck to thoroughly rinse
9. Disengage the blades utilizing the PTO knob.
10. Turn the Key Switch to the OFF position to turn off the mower.
11. Turn the water off and detach the garden hose and coupler from the water port on your cutting deck.

ADJUSTMENTS AND REPLACEMENTS

⚠ WARNING! IMMEDIATELY CONTACT A PRORUN-APPROVED SERVICE CENTER IF THE DRIVE LEVERS' NEUTRAL / FORWARD / REVERSE FUNCTIONS, OR IF THE CUTTING BLADE'S ENGAGEMENT / DISENGAGEMENT SWITCH MALFUNCTIONS.

ADJUSTING THE DECK WHEELS

Move the mower onto a firm and level surface, preferably pavement, and proceed as follows:

1. Place the cutting deck lift handle to the desired mowing height setting.
2. Check the wheels for contact or excessive clearance with the surface below.
3. The deck wheels should have between ¼ to ½ inch of clearance above the ground.

If the Deck Wheels have excessive clearance or contact with the surface, adjust as follows:

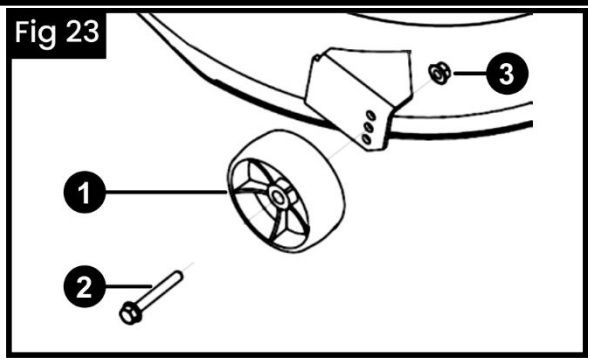

1. Raise the cutting deck lift handle to its highest setting.
2. Remove the front and rear deck (1) wheels by removing the bolts (2) and lock nuts (3).
3. Place the cutting deck lift handle into the desired mowing height setting.
4. Reinsert the bolts (from each deck wheel – Part 1) into the index hole that leaves approximately ¼ to ½ inch between the bottom of the wheel and the pavement.

Refer to Figure 23.

REPLACING FRONT WHEELS

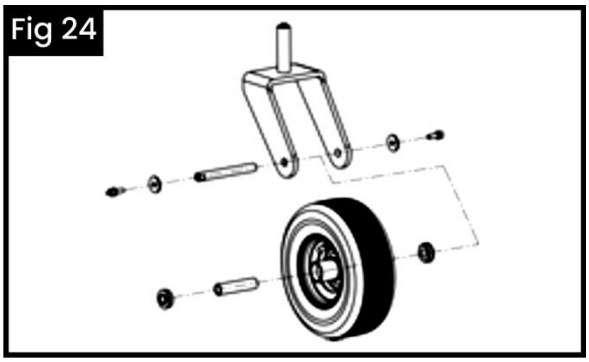

- Stop the machine on flat ground and put a block under a load-bearing part of the frame on the side that the wheel is to be changed.
- The front wheels are fixed with two M8 X 25 bolts.
- Use an S6 Allen wrench to tighten the assembly to a torque of 14.75 to 18.44 Ft / Lbs. (20 to 25 Nm).

Refer to Figure 24.

REPLACING REAR WHEELS

- Stop the machine on flat ground and put a block under a load-bearing part of the frame on the side that the wheel is to be changed.
- The rear wheels are held with four retaining nuts.
- Use an S6 socket wrench to tighten the assembly to a torque of 36.88 to 51.63 Ft / Lbs. (50 to 70 Nm).

Refer to Figure 25

Fig 25

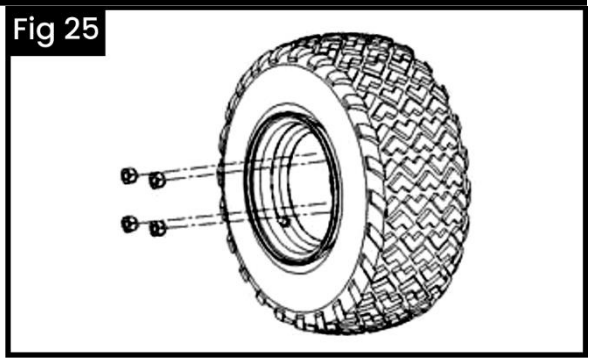

NOTE IF YOU HAVE TO REPLACE ONE OR BOTH REAR WHEELS THEY MUST HAVE THE SAME DIAMETER.
Be sure to check that the cutting deck is horizontal to prevent an uneven cut. You must make sure the key and washer are securely lodged in place.

NOTE BEFORE REMOUNTING THE WHEEL, APPLY GREASE TO AXLE. PUT THE SNAP RING AND SUPPORTING WASHER BACK IN PLACE.

REPAIRING THE TIRES
The tires are "tubeless" and so all punctures must be repaired by a tire repairer following the procedures required for this kind of tire.

CUTTING BLADE MAINTENANCE

⚠ WARNING! DAMAGED OR BENT BLADES MUST ALWAYS BE REPLACED. NEVER TRY TO REPAIR THEM!

⚠ WARNING! BEFORE YOU INSPECT OR REMOVE THE BLADE, DISENGAGE THE POWER, PULL THE SAFETY KEY, AND WAIT FOR THE BLADES TO COMPLETED STOP.

⚠ WARNING! AFTER STRIKING A FOREIGN OBJECT, STOP THE MOWER.
Thoroughly inspect the machine for any damage. Repair the damage before starting and operating.

⚠ WARNING! WHEN REMOVING THE CUTTING BLADE(S) FOR SHARPENING OR REPLACEMENT, PROTECT YOUR HANDS WITH A PAIR OF HEAVY GLOVES OR USE A HEAVY RAG TO HOLD THE BLADE(S).

ALWAYS USE PRORUN SPECIFIED BLADES.

- Make sure the blades are correctly balanced.

- The blades mount differently and rotate in different directions. Make sure you mount them in the correct place by referring to the code stamped on the outside of each blade.
- Periodically inspect the blade adapter(s) for cracks, especially if you strike a foreign object.

FOLLOW THE STEPS BELOW FOR BLADE(S) SERVICE:

1. The deck on the mower should not be removed. To access the blade(s), the mower can be placed on a lift, driven on ramps, or placed on jack stands.

⚠ WARNING! BE SURE THE MOWER IS SECURED, AND THE PARKING BRAKE HANDLE IS SET WHEN REMOVING THE BLADE(S).

2. Remove the screws (1) and the disc washers (2), which hold the blades (3) and the blade adapters (4) to the deck motor spindles (5).
3. Remove the blades and adapters from the deck motor spindles.

Refer to Figure 26.

Fig 26

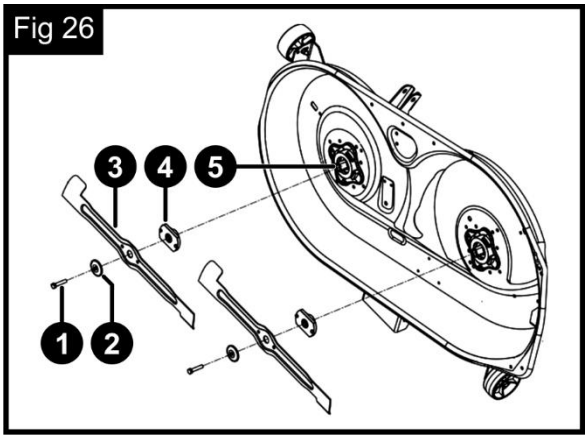

4. Check the balance of the blade on top of a round shaft screwdriver.
5. Remove metal from the heavy side until it balances evenly. When sharpening the blade, follow the original angle of the blade and the cutting edge. Grind or file each cutting edge equally to keep the blade balance.

⚠ WARNING! AN UNBALANCED BLADE WILL CAUSE EXCESSIVE VIBRATION WHEN ROTATING AT HIGH SPEEDS. IT MAY CAUSE DAMAGE TO THE MOTOR OR THE MOUNTING HARDWARE, WHICH COULD CAUSE PERSONAL INJURY.

6. Visually inspect the blade adapter for any damage or cracks.
7. Lubricate the inner surface of the blade adapter with a light oil.
8. Slide the blade adapter onto the deck motor spindle. Place the blade on the adapter such that the side of the blade marked “bottom” (or with part number) faces the ground when the mower is in the operating position. Make sure that the blade is aligned and seated on the blade adapter’s flanges.
9. Place the disc washer with the blade. Replace screw and tighten torque to 35.4 to 38.5 Ft. / Lbs. (48 to 52 Nm).
10. To ensure safe operation of your mower, periodically check the blade screw(s) for correct torque.

CUTTING DECK ASSEMBLY / CUTTING BLADES

ALIGNING THE CUTTING DECK ASSEMBLY

The cutting deck assembly should be correctly adjusted to obtain an evenly mown lawn. If the mowing is uneven, check the tires' pressure.

If this is not sufficient to achieve an even cut, please contact a PRORUN-approved service dealer to adjust the alignment of the cutting deck assembly.

CUTTING BLADES

Badly sharpened cutting blades pull at the grass and cause the lawn to turn yellow.

⚠ WARNING! ALWAYS REPLACE DAMAGED, BENT, OR WORN PAIRS OF THE CUTTING BLADE'S ASSEMBLY TO MAINTAIN THEIR BALANCE.

⚠ WARNING! ALL WORK ON THE CUTTING DECK AND CUTTING BLADES (DISASSEMBLY, SHARPENING, BALANCING, REPAIRING, REASSEMBLY AND/OR REPLACING) ARE DEMANDING JOBS THAT REQUIRE SPECIAL SKILLS AS WELL AS SPECIAL TOOLS. FOR SAFETY REASONS, THESE JOBS ARE BEST CARRIED OUT AT A PRORUN-APPROVED SERVICE CENTER.

REPLACING A FUSE

- The machine is fitted with 20A fuses and 100A fuses. When it blows, the machine will stop, and the dashboard light switches off.
- Eventually, the battery gradually runs out of power, and the machine will have problems starting.
- Remove the fuse and replace it with the same fuse.

NOTE A BLOWN FUSE MUST ALWAYS BE REPLACED BY ONE OF THE IDENTICAL TYPE AND AMPERE RATING, AND NEVER BY ONE WITH ANOTHER RATING.

LUBRICATION

Utilize a grease gun to apply a small, controlled amount of grease directly to the wheel bearing area through the appropriate grease fittings.

- Apply two or three shots of grease and wipe off excess grease.

Lubricate the machine's movable components with engine oil.

- Wipe the area clean, apply a few drops of oil, then wipe up drips or spills.

MAINTENANCE SCHEDULE

MAINATENANCE SCHEDULE	PRIOR TO USE	EVERY 10 HOURS	EVERY 25 HOURS	EVERY 50 HOURS	PRIOR TO OFF-SEASON STORAGE
Lube Front Caster Wheel and Wheel Spindles			X		X
Lube Pedal Pivots		X			X
Grease Front Castings			X	X	
Check Blades	X				
Charge Battery	X				X
Check Hardware	X				

NOTE THE ELECTRICAL COMPONENTS ON THIS MOWER ARE NOT SERVICEABLE. CONTACT PRORUN CUSTOMER SERVICE.

⚠ CAUTION! CONTACT PRORUN CUSTOMER SERVICE FOR REPLACEMENT PARTS. USE ONLY IDENTICAL REPLACEMENT PARTS. THIS WILL ENSURE THAT THE SAFETY OF THE MOWER IS MAINTAINED.

⚠ WARNING! BEFORE PERFORMING ANY MAINTENANCE OR REPAIRS, STOP THE MOWER, DISENGAGE BLADES, SET PARKING BRAKE HANDLE, AND REMOVE THE SAFETY KEY TO PREVENT UNINTENDED STARTING OF THE BLADES OR MOVEMENT OF THE MOWER.

10. STORAGE & TRANSPORT

When you intend to put your machine away for more than 30 days:

- Turn off the power, remove the safety key, and allow the machine to cool down.
- Clean and maintain the machine thoroughly.
- Check the machine for any damage. If necessary, contact a PRORUN-approved service center.

Store the machine:

- With the cutting deck assembly lowered.
- In a dry place.
- Protected against poor weather conditions, at a recommended temperature of between +32° to +105° F (0° to +40 °C).
- Covered with a tarp if possible.
- In a location out of the reach of children.
- Ensure that the keys and maintenance tools are removed.

NOTE MAKE SURE THAT THE BATTERY IS FULLY CHARGED AT LEAST ONCE A MONTH AND ALWAYS BEFORE USE.

When re-starting the machine, review SET-UP and OPERATIONS in this manual.

HANDLING AND TRANSPORT

When handling the machine, always:

- Disengage the cutting blades with the PTO knob.
- Raise the cutting deck assembly to the highest position.
- Turn OFF the power and pull the safety key.

When transporting the machine on a vehicle or trailer, always:

- Use an access ramp of suitable strength, width, and length.
- Load the machine with the electric motor switched off, the safety key removed, without a driver, and pushed by an adequate and safe number of people.
- Position it so that it does not cause a hazard to anyone.
- Lock it firmly on the means of transport using ropes or chains to prevent it from tipping over and possible damage.

IF YOU FEEL UNABLE TO CARRY OUT HANDLING OR TRANSPORT IN SAFE CONDITIONS, CONTACT PRORUN CUSTOMER SERVICE.

ASSISTANCE AND REPAIRS

- This manual provides all the necessary information to run the machine and for correct basic maintenance operations which can be performed by the user.
- Any regulations and maintenance operations not described herein must be carried out by a PRORUN-approved dealer or service center which have the necessary knowledge and equipment to ensure that the work is carried out correctly, maintaining the correct degree of safety and the original operating conditions of the machine.
- Any operations performed in unauthorized service centers or by unqualified persons will totally invalidate the warranty and all obligations and responsibilities of the manufacturer.
- Only PRORUN-approved service centers can carry out guaranteed repairs and maintenance. PRORUN-approved service centers only use genuine spare parts and attachments that have been designed specifically for these machines.
- Non-original parts and attachments are not approved.
- Use of non-original spare parts and attachments will jeopardize the safety of the machine and relieve the manufacturer from all obligations or liabilities.
- It is advisable to send your machine once a year to a PRORUN-approved service center for service, assistance, and safety device inspection.

11. TROUBLESHOOTING

ISSUE	POSSIBLE CAUSE	POSSIBLE REMEDY
The electric zero turn mower fails to drive when the two Steering levers are pushed forward or backward at the beginning. **Steering Level Icon Blinks** 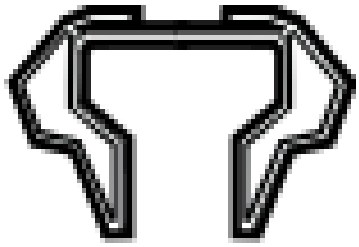	The combined Ah of the inserted batteries is less than 10 Ah.	To start this mower, PRORUN batteries totaling 10Ah or more are required. For best performance, we recommend using batteries that total 40Ah or more.
	The parking brake pedal is set in the braking position.	Fully depress the parking brake pedal to release it from the braking position.
	The steering levers are not in the open position when starting the mower.	Return the steering levers to the open position and restart the mower.
	The operator is not sitting on the seat.	Only when the operator correctly sits on the seat, can they operate the mower.
	The seat switch is not connected correctly.	Remove the battery from the mower and disassemble the seat in the reverse order of the instructions in section SEAT ASSEMBLY in this manual to inspect the seat switch connection. Reassemble the seat and follow the instructions in START THE MACHINE to restart the mower to see if the mower can be started. If not, contact a PRORUN-approved service technician for repair.
	Under extreme cold weather, the driving function may not start successfully due to the low temperature protection.	Always store the mower and battery in a warm environment. Restart the mower when it is warmed up. Please do not make repeated attempts in extreme cold weather which may damage the machine. Recommended operating temperature is 32° F - 104° F (0° C - 40° C).

ISSUE	POSSIBLE CAUSE	POSSIBLE REMEDY
The electric zero turn mower stops driving.	Steering levers require a reset.	Return the steering levers to the open position and restart the mower.
	The electric controlling components of the steering levers have failed.	Contact a PRORUN approve service technician for repair.
	The seat switch got disconnected.	Remove the battery from the mower and disassemble the seat in the reverse order of the instructions in section SEAT ASSEMBLY in this manual to inspect the seat switch connection. Reassemble the seat and follow the instructions in START THE MACHINE to restart the mower to see if the mower can be started. If not, contact a PRORUN-approved service technician for repair.
The driving speed / driving mode cannot be adjusted during driving.	This is a feature of the electric zero turn mower for safe driving.	The function will activate only when the mower wheels are stopped, and the steering levers are open.
The electric zero turn mower fails to start the blades when the PTO switch is engaged. **The PTO Switch Icon Does Not Appear on the Screen** 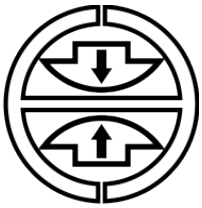	The combined Ah of the inserted batteries is less than 20 Ah.	Push the PTO switch downward and restart the mower's blades.
	The PTO switch is not pushed down when the mower stopped last time.	Start the mower grass cutting in lower blade speed first and do not accelerate the blade speed until the blades are achieving successful rotation.
	Under extreme cold weather, The blade motor may not start successfully due to the low temperature protection.	Always store the mower and battery in a warm environment. Restart the mower when it is warmed up. Please do not make repeated attempts in extreme cold weather which may damage the machine. Recommended operating temperature is 32° F - 104° F (0° C - 40° C).
	The blade interferes with a deformed mower deck.	Contact a PRORUN-approved service technician for repair.

PRORUN		
ISSUE	**POSSIBLE CAUSE**	**POSSIBLE REMEDY**
The blades stop working during grass cutting.	The mower is overloaded.	Raise the deck cutting height or slow down the driving speed to reduce the load of the mower.
	The mower deck is clogged with grass and debris.	Clean the mower deck and make certain that the blades have freedom of movement.
	The battery pack(s) in the mower's battery compartment are overheated, resulting in combined Ah rating of all inserted batteries to be below 20 Ah.	1. If the combined battery Ah rating is less than 20Ah, the mower will not work until more battery packs are inserted into the vacant battery components. Once the overheated battery returns to normal temperature, it will join in powering the mower immediately. 2. Reduce the load of the mower by raising the deck cutting height or slowing down the mowing when resuming operation.
	The mower has hit a foreign object that has resulted in the motor's self-protection.	Push the PTO switch downward and restart the mower blades.
	The mower is overheated.	Reduce the load of the mower by raising the deck cutting height or slowing down the blade / driving speed and allow the mower to cool.
The beeping indicator continues sounding	The mower is in Limp-Home mode, and the blades are not turned off.	Push the PTO switch down to disengage the deck blades. The beeping indicator will stop sounding when the blade stops
	The mower stops driving on a slope and the operator opens the steering levers and is off the seat without setting the parking brake pedal at the braking position.	Set the parking brake pedal in the braking position before leaving the mower on the slope.

ISSUE	POSSIBLE CAUSE	POSSIBLE REMEDY
The mower cuts unevenly with significant height difference front to rear.	The blades are dull.	Sharpen or replace the cutting blade as instructed in this manual.
	The blades are bent.	Replace the bent cutting blade following the instructions in section CUTTING BLADE MAINTENANCE.
	The mower deck is not leveled resulting in different cutting blade height.	Level the mower deck following the instructions in section ALIGNING THE CUTTING DECK ASSEMBLY.
The LCD screen fails to be illuminated with all icons on.	The pressing time on the start/stop button is less than five seconds.	1. The LCD screen will only display FUEL GAUGE when the Start / Stop button is pressed briefly. 2. The LCD screen will turn on after the Start / Stop button has been pressed for five seconds.
The actual grass cutting height is not aligned with the claimed height.	The mower deck nuts are loosened on the suspension linkage.	Adjust the lawn mower deck to make the front and rear heights correct and firmly tighten the four nuts on the suspension connecting rod (two per side).
	The mower deck is damaged or seriously worn.	1. Replace the mower deck. 2. Contact a PRORUN-approved service technician for repair.
The mower does not mulch properly	Wet grass clippings are sticking to the underside of the deck.	Wait until the grass dries before mowing.
	The mower is set to cut too much grass at once.	Raise the deck cutting height.

ISSUE	POSSIBLE CAUSE	POSSIBLE REMEDY
There is excessive vibration.	The cutting blades are loose.	Tighten the blade bolt to the recommended torque 35.4 to 38.5 Ft. / Lbs. (48 to 52 Nm).
	The blades are bent.	Replace the bent cutting blade following the instructions in section CUTTING BLADE MAINTENANCE.
	The mower deck is not leveled.	Contact a PRORUN-approved service technician for repair.
	The mower deck nuts are loosened on the suspension linkage.	Contact a PRORUN-approved service technician for repair.
	The mower is set to cut too much grass at one.	Raise the deck cutting height.
There is grass or debris remaining on the ground after mowing.	The mower is set to cut too much grass at once when the grass is tall.	Begin with a high cutting height and reduce it until the desired mowing result is attained. Grass over six inches tall should be mowed twice at successively lower cutting heights.
	The grass is wet	Do not mow when the grass is wet until the grass dries.
	The driving speed is high.	Slow down the driving speed.
	The blade speed is low.	Increase the blade speed gradually.
There is nominal motor running time with included battery.	Grass conditions and cutting-height setting will greatly affect the battery's run-time. The claimed run-time is based on a light load condition.	Raise the deck cutting height and slow down the blade speed to reduce the cutting load.
The mower is not tracking straight.	The tire pressures for the left and right rear wheels are different.	Check and adjust the air pressure in both rear wheel tires, according to the recommendation in section, RECOMMENDED TIRE PRESSURES, in this manual.
	The driving speeds for the left and right rear wheels are different.	Contact a PRORUN-approved service technician for inspection and have wheel calibration adjusted if needed.

ISSUE	POSSIBLE CAUSE	POSSIBLE REMEDY
The parking brake pedal cannot be released from the braking position or is slow to spring back.	There may be debris or dirt getting inside the parking brake pedal.	Open the parking brake pedal box to thoroughly clean the box inside and close it. Reset the parking brake pedal to see whether the problem is solved. If not, contact a PRORUN-approved service technician for repair.
Lawn mower cannot charge.	The plug of the charger is not correctly inserted into the charging port on the mower.	Reconnect the charger plug to see whether the mower can be charged normally.
	There is no power in the wall outlets.	No action is needed. Wait until the power recovers.
	The charger is malfunctioning.	Contact a PRORUN-approved service technician for inspection and have charger replaced if required.
	The charger port on the mower is defective.	Contact a PRORUN-approved service technician for repair.
The charging time via the mower charging port is too long.	Using the TOPSUN Adapter WTL6008PNG for charging frequently requires an extended period time.	Use TOPSUN charger 1200BG6018L for charging the electric zero turn mower directly.
The battery cannot be fully charged via the mower charging port.	Firmware bug of the riding mower or a charger / battery failure.	Unplug the charger, wait for over one minute, and then reconnect the plug to the power supply. If this does not work, contact a PRORUN-approved service technician for repair.
The mower cannot be started after cleaning.	Improper cleaning may have occurred, such as water getting on electric components, the LCD screen, motors, etc.	Follow the instructions in section CLEANING THE MACHINE to clean the mower correctly.

ISSUE	POSSIBLE CAUSE	POSSIBLE REMEDY
It is easy for the mower to be clogged.	The mower deck is clogged with grass and debris.	1. If the mower has mowed wet grass, allow it to dry for over 12 hours, or use compressed air to dry it completely. 2. Clean the mower deck after each use by following the section, CLEANING THE CUTTING DECK AND BLADES.
The mower easily loses traction when climbing up on the slope.	The tires of the rear wheels are worn.	Contact PRORUN Customer Service to replace the wheel tires.
	The slope is too steep for correct mowing.	Mowing slope should be less than 15-degrees.
When the mower is stopped on a slope with the parking brake pedal pressed, the mower can slide downward the slope.	The brake components are excessively worn due to improper operation of the mower.	Contact a PRORUN- approved service technician for repair.
There is no water coming from the wash port when performing deck washing.	The wash-port quick coupler is not mounted correctly on the wash port.	Re-attach the wash-port quick coupler until you hear a clear click after firmly pushing. If this does not work, contact a PRORUN-approved service technician for repair.
There is abnormal sound when manual pushing the mower without starting.	The sound may be coming from the magnets inside the driving motor.	This is normal and no action is required.

12. MOWER STATUS REFERENCE & FAULT CODES

LCD DISPLAY	DESCRIPTION	LCD FAULT CODE	BEEPER	CAUSE	REMEDY
	The Auto-Parking icon blinks on the LCD. **ICON OFF**	N/A	NO	The mower is parked on a slope and the operator leaves the mower without setting the Brake Pedal at the braking position and the steering levels in the open position.	Set the Brake Pedal at the braking position. The auto-parking icon will turn off.
	Brake Pedal icon is displayed on the LCD. **ICON OFF**	N/A	NO	The parking Brake Pedal is set at the braking position.	Release Parking Brake before starting the mower.
	Temperature icon is displayed on the LCD. **ICON FLASHES RED**	N/A	NO	The Battery is overheating	Stop the machine and remove the Battery until it cools.
	Seat Sensor icon is displayed on the LCD. **ICON FLASHES RED**	N/A	ONE BEEP	The operator leaves the seat or seat switch is disconnected.	If the operator is correctly seated on the seat and the icon is on, stop operating the mower immediately and check the seat connection. If the seat switch is correctly connected to the mower contact a PRORUN-approved service technician for repairs.
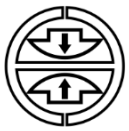	PTO Switch icon blinks. **ICON OFF**	N/A	NO	The blade motor was interrupted in operation, and the PTO switch is not set to the OFF position.	Before restarting the mower, push the PTO switch downward to disengage the deck motor. Please see the TROUBLESHOOTING section in this manual for reference.

LCD DISPLAY	DESCRIPTION	LCD FAULT CODE	BEEPER	CAUSE	REMEDY
	BMU communication failure	B01	ONE BEEP	Battery communication at fault	Replace the battery pack. If the problem persists, Contact PRORUN Customer Service.
	BMU hardware failure	B02		Battery hardware at fault	
	Battery pack FAIL fault	B03	N/A	Battery pack at fault	
	Battery Temperature abnormal alarm	B04	N/A	Battery temperature at fault	
	Battery Capacity is less than 10AH	B46	N/A	Battery pack at fault	
	Mowing Controller communication failure	C01	N/A	Controller at fault	Shut off and restart the mower. If the problem persists, Contact PRORUN Customer Service.
	Connection failure of main and auxiliary mowing controllers	C02	N/A	Controller at fault	
	Mowing Controller timing failure	C03	N/A	Controller at fault	
	Hall fault of mowing motor	C04	N/A	Motor at fault	
	Over-temperature fault of mowing motor	C05	N/A	Motor temperature at fault	
	Mowing Motor overcurrent (blocking) alarm	C06	N/A	Motor at fault	
	Drive controller communication failure	F01	N/A	Controller at fault	
	Undervoltage protection	F12	N/A	Protection function	

LCD DISPLAY	DESCRIPTION	LCD FAULT CODE	BEEPER	CAUSE	REMEDY
	Overvoltage protection	F13	N/A	Protection function	Shut off and restart the mower. If the problem persists, Contact PRORUN Customer Service.
	Drive Controller temperature protection	F14	N/A	Protection function	Automatic recovery after normal temperature is achieved. If problem persists, Contact PRORUN Customer Service.
	Drive Motor overheating protection	F15	N/A	Protection function	
	Leader / Follower selector switch identification error	F16	N/A	Switch at fault	Shut off and restart the mower. If the problem persists, Contact PRORUN Customer Service.
	Main Controller accelerator protection, accelerator input sequence error or failure	F21	N/A	Controller at fault	
	Recharge failure	F22	N/A	Recharge at fault	
	Encoder failure or Motor stall	F23	N/A	Encoder at fault	
	Motor short circuit protection corresponding to main controller	F24	N/A	Motor at fault	
	Overcurrent protection	F25	N/A	Protection function	
	Motor overspeed	F27	N/A	Motor at fault	
	Leader / Follower controller communication timeout	F28	N/A	Controller at fault	

LCD DISPLAY	DESCRIPTION	LCD FAULT CODE	BEEPER	CAUSE	REMEDY
	Slave Controller failure	F29	N/A	Controller at fault	Shut off and restart the mower. If the problem persists, Contact PRORUN Customer Service.
	Brake Coil open or short circuit	F31	N/A	Brake coil at fault	
	5V or 12V voltage output out of range	F41	N/A	Voltage at fault	
	Battery BMS report failure	F42	N/A	Battery at fault	
	Inconsistent Leader / Follower signals	F43	N/A	Signals at fault	
	Master and Slave MCU communication timed out	F44	N/A	Protection function	
	Battery communication timeout	F45	N/A	Protection function	
	Park Switch active	F52	N/A	Park switch notification	
	There is a Throttle input when the powered is on	F53	N/A	Throttle notification	
	Seat Switch malfunction	F54	N/A	Seat Switch at fault	
	EEPROM failure	F83	N/A	Protection function	

13. PRODUCT DIMENSIONS

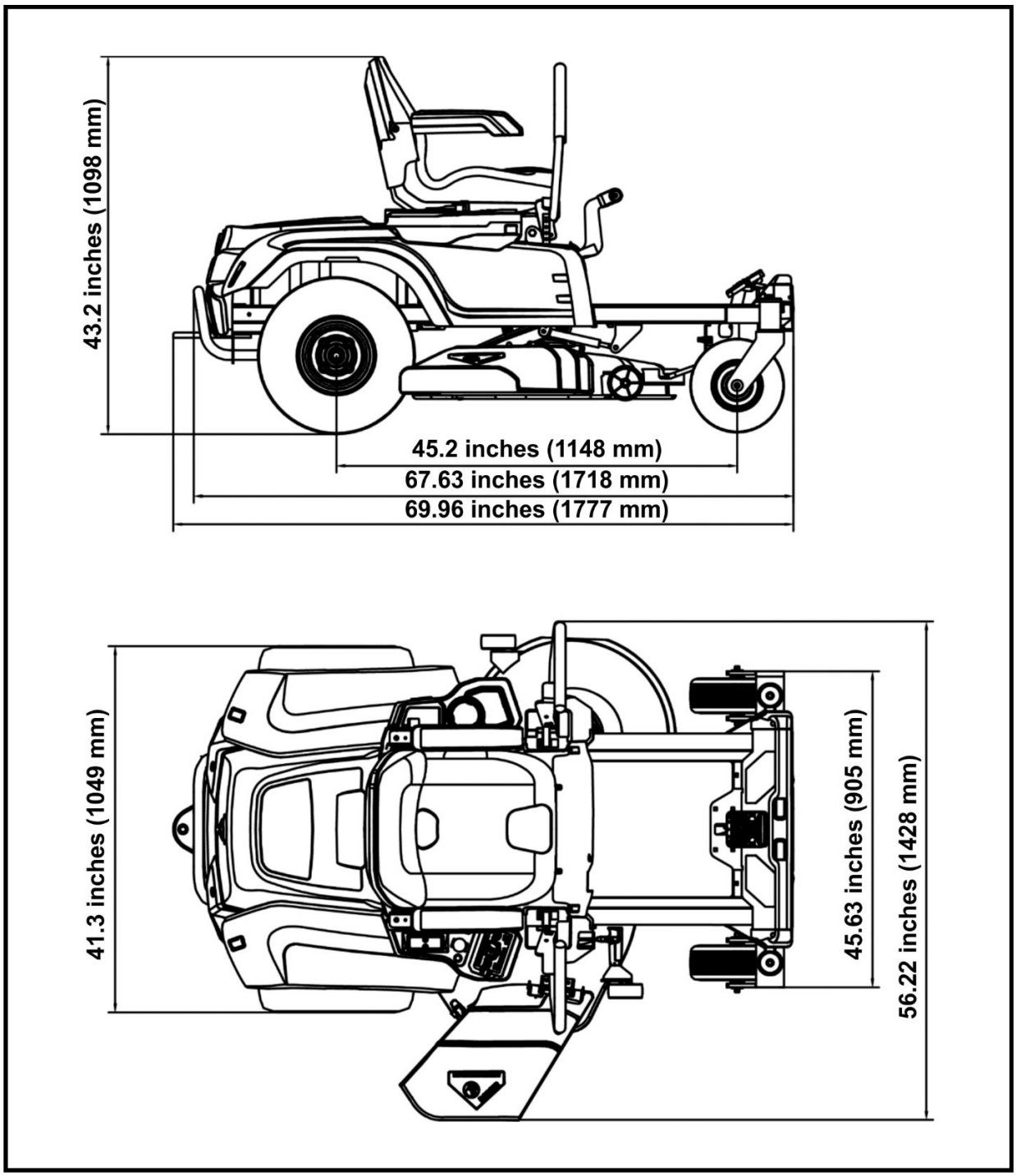

14. EXPLODED VIEWS AND PARTS

FRAME ASSEMBLY

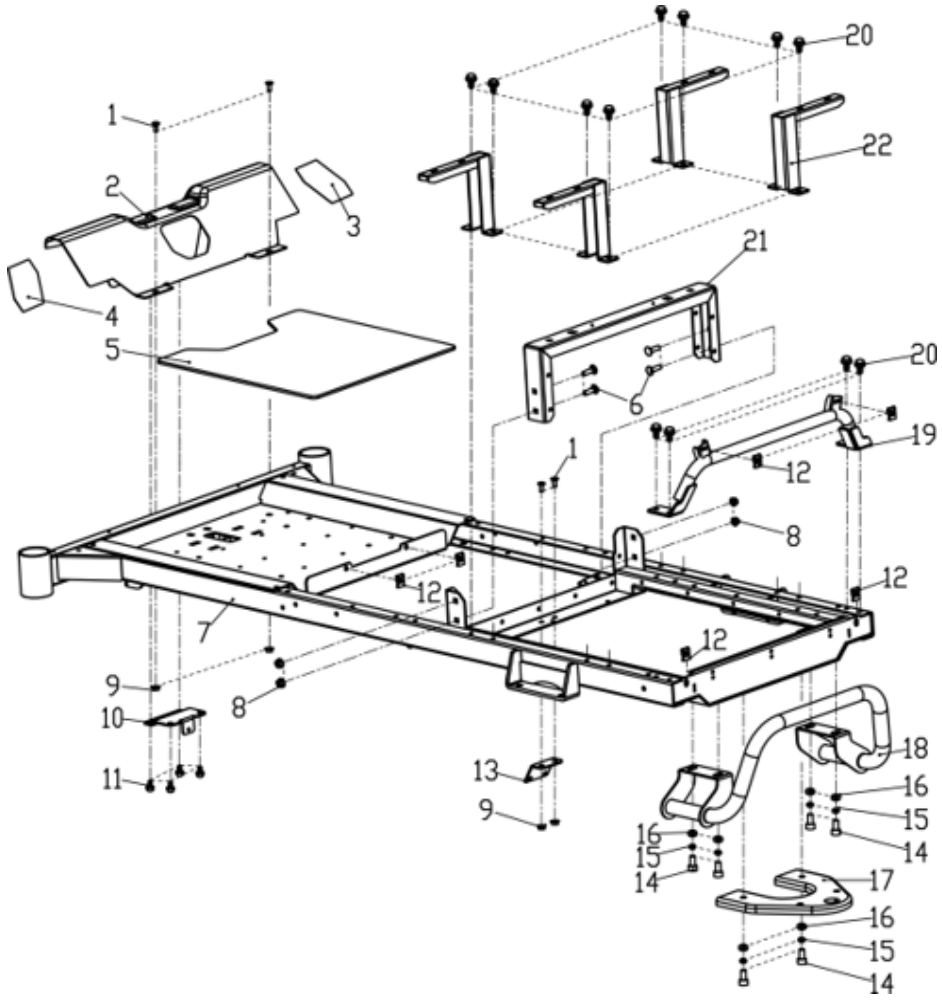

NO	PART NAME	QTY	PART #
1	HEX FLANGE BOLT M6x16	4	20061289
2	FRONT PEDAL	1	20091396
3	FRONT PEDAL MATS RIGHT	1	20091316
4	FRONT PEDAL MATS LEFT	1	20091438
5	PEDAL FOOT MAT	1	20087177
6	SEMICIRCULAR HEAD SQUARE BOLTS M8x20	4	20061299
7	FRAME WELDMENT	1	20091370
8	HEXAGONAL FLANGE LOCK NUT M8	4	20061348
9	HEXAGONAL FLANGE LOCK NUT M6	4	20061385
10	FRONT PEDAL MOUNT	1	20091367
11	HEXAGONAL WASHER LOCKING SCREWS 6x16	4	20082800
12	SNAP NUT M6	6	20070630

13	CABLE PULLING BACKSEAT	1	20091304
14	HEXAGON HEAD BOLTS M10x1.25x20	6	20090199
15	SPRING WASHERS 10	6	20061471
16	FLAT WASHERS 10	6	20061513
17	TRACTION PLATE	1	20091449
18	REAR BUMPER WELDMENT	1	20091380

19	REAR COWL BRACKET	1	20091345
20	HEXAGONAL FLANGE BOLTS 5/16-18TX3/4	12	20082799
21	SIDE REAR BRACKET WELD-ON	1	20091344
22	SIDE COWL BRACKET WELD-ON	4	20091483

CUTTER HEAD COMPONENT

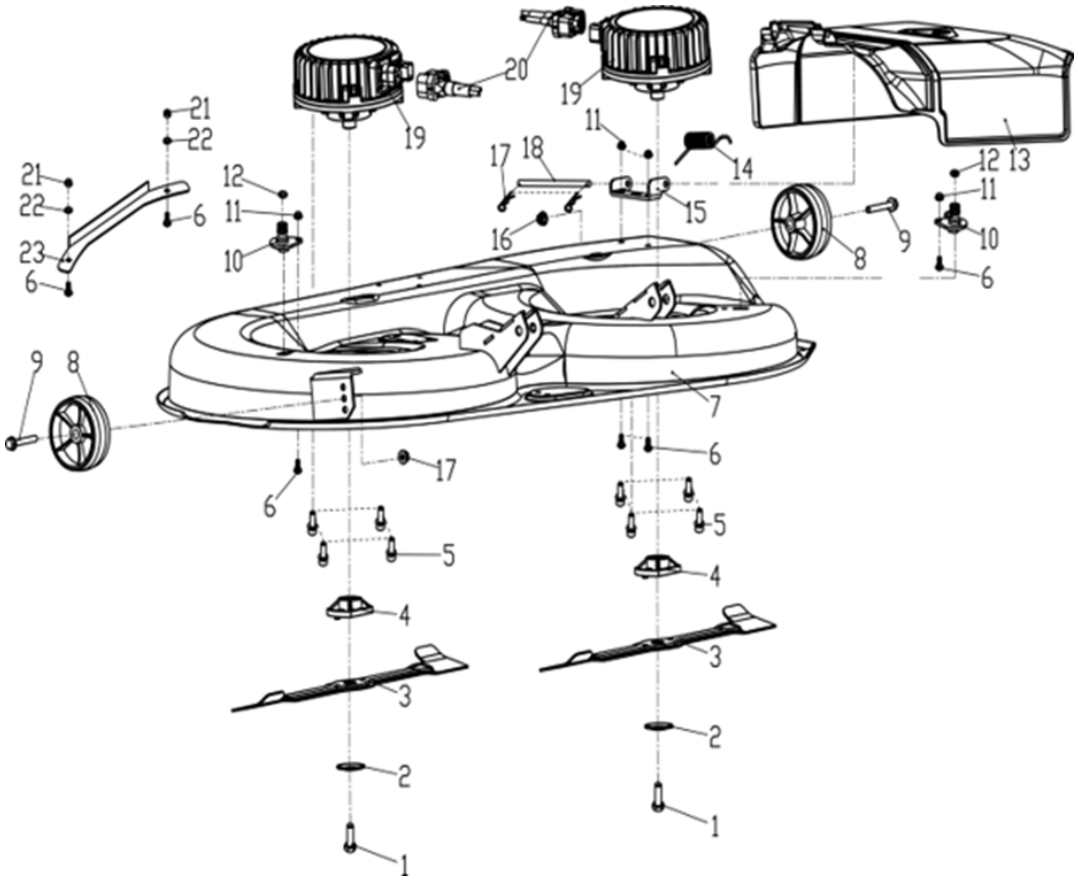

NO	PART NAME	QTY	PART #
1	SHOULDER NUT	2	20061267
2	SAUCER WASHER	2	20070623
3	BLADE	2	20086297
4	BLADE ADAPTER	2	20091438
5	HEX FLANGE BOLT M8x30	8	20075009
6	STEP BOLT M6x16	6	20061289
7	CUTTERHEAD WELDMENT	1	20091414
8	CUTTER WHEEL	2	20088559
9	SMALL WHEEL AXLE	2	20085378
10	SPOUT	2	20070624
11	HEXAGONAL FLANGE LOCK NUT M6	4	20061385
12	O-RING 11.2*2.65	2	20055756
13	GRASS GUARD	1	20086249
14	TORSION SPRING FOR GRASS GUARD	1	20086192
15	DOUBLE EAR SEAT	1	20084843
16	HEXAGONAL FLANGE LOCK NUT M8	2	20061348
17	ELASTIC PIN 2	2	20070576
18	PIN WITH HOLE 8x168	1	20082335
19	KNIFE MOTOR	2	20087169
20	MOTOR WIRING HARNESS	2	20088152
21	HEXAGONAL LOCKNUT M6	2	20061421
22	WASHERS 6	2	20061482
23	CUTTER LEFT REINFORCEMENT PLATE	1	20086368

DECK LIFT SYSTEM

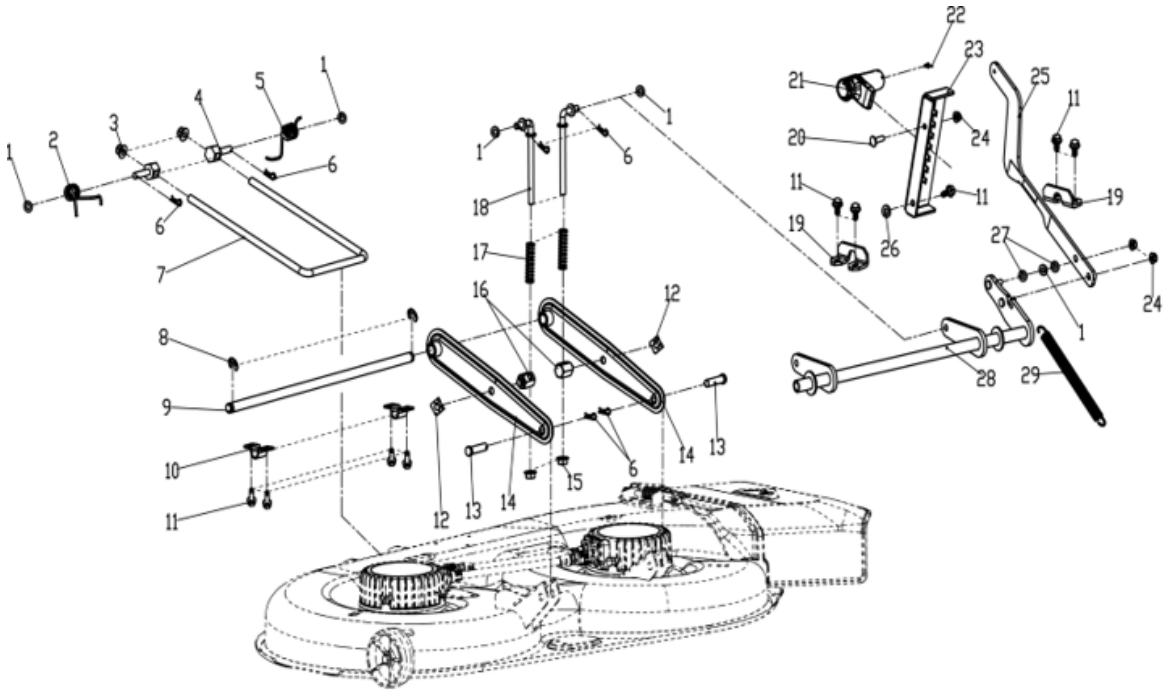

NO	PART NAME	QTY	PART #
1	WASHER 10	5	20061497
2	LEFT TORSION SPRING	1	20087178
3	HEXAGONAL FLANGE FACE LOCKNUT M12x1.25	4	20061359
4	TURNBUCKLE WITH HOLE XCT102	2	20060820
5	RIGHT TORSION SPRING	1	20087184
6	ELASTIC PIN 2	6	20070576
7	FRONT TIE RODS	1	20087208
8	COTTER RING 12	2	20061473
9	REAR ROCKER SHAFT	1	20087194
10	U-SHAPED LEVER	2	20089912
11	HEXAGONAL FLANGE FACE BOLTS 5/16-18TX3/4	9	20082799
12	DK RETAINING CLIPS12	2	20081159
13	TIE ROD PIN	2	20084151
14	REAR ROCKER ARM WELDMENT	2	20091443
15	HEXAGONAL FLANGE LOCK NUT M10x1.25	2	20061405

16	LIFT ROD JOINT	2	20087190
17	CUSHION SPRING	2	20087206
18	LIFT ROD	2	20087209
19	LIFT SHAFT FIXING PLATE	2	20091401
20	SEMICIRCULAR HEAD SQUARE BOLTS M8x20	1	20061299
21	LIFTING HANDLE SLEEVE	1	20091405
22	CROSS RECESSED PAN HEAD TAPPING SCREWS ST4.8x19	1	20051807
23	LIFTING GEAR PLATE	1	20091292
24	HEXAGONAL FLANGE FACE LOCK NUTS M8	3	20061348
25	LIFTING HANDLE	1	20091328
26	FLAT WASHERS 10x20x3	1	20061511
27	SADDLE ELASTIC WASHER 10x21x1	2	20061468
28	SUSPENSION SHAFT WELDMENT	1	20091418
29	LIFT ASSISTED TENSION SPRING	1	20084564

FRONT AXLE ASSEMBLY

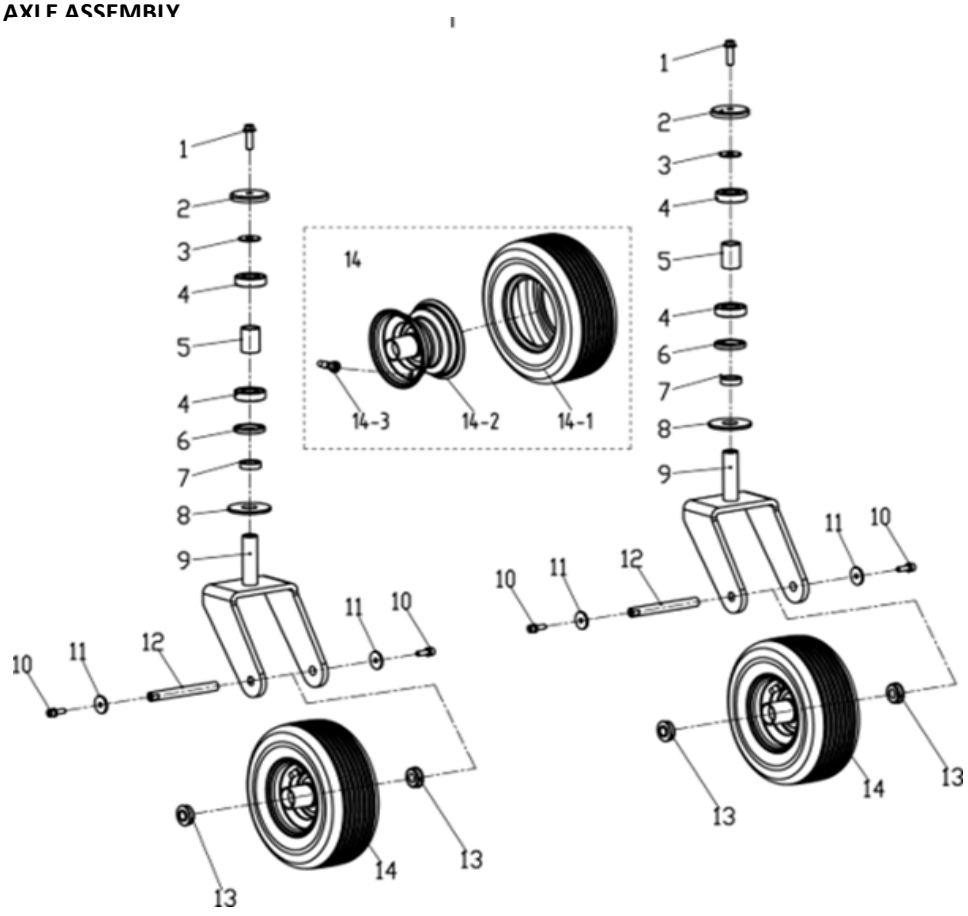

NO	PART NAME	QTY	PART #
1	HEX FLANGE BOLT M10x1.25x30	2	20061283
2	BEARING END CAPS	2	20084052
3	WASHERS 43x10.5x3	2	20073978
4	SINGLE ROW TAPERED ROLLER BEARINGS 30205-2RS	4	20084094
5	BEARING BUSHING	2	20084150
6	OIL SEAL 52x35x8, GB/T13871	2	20084111
7	OIL SEAL BRUSHING	2	20084080
8	WASHER 72x25.4x5	2	20084104
9	FRONT WHEEL BRACKET WELDMENT	2	20091546
10	HEXAGON SOCKET CHEESE HEAD TRIPLE COMBINATION SCREWS M8x25	4	20078651
11	WASHER 43x8.5x3	4	20071743
12	FRONT WHEEL AXLE	2	20087193
13	FLANGE BEARING 1635	4	20061627
14	FRONT WHEEL ASSEMBLY	2	40053848
14-1	VACUUM TIRE BZM160S,11x4-5	1	20087171
14-2	FRONT WHEEL HUB BZM160S,147x89	1	20086296
14-3	VALVE NOZZLE	1	20061665

TRANSMISSION SYSTEM

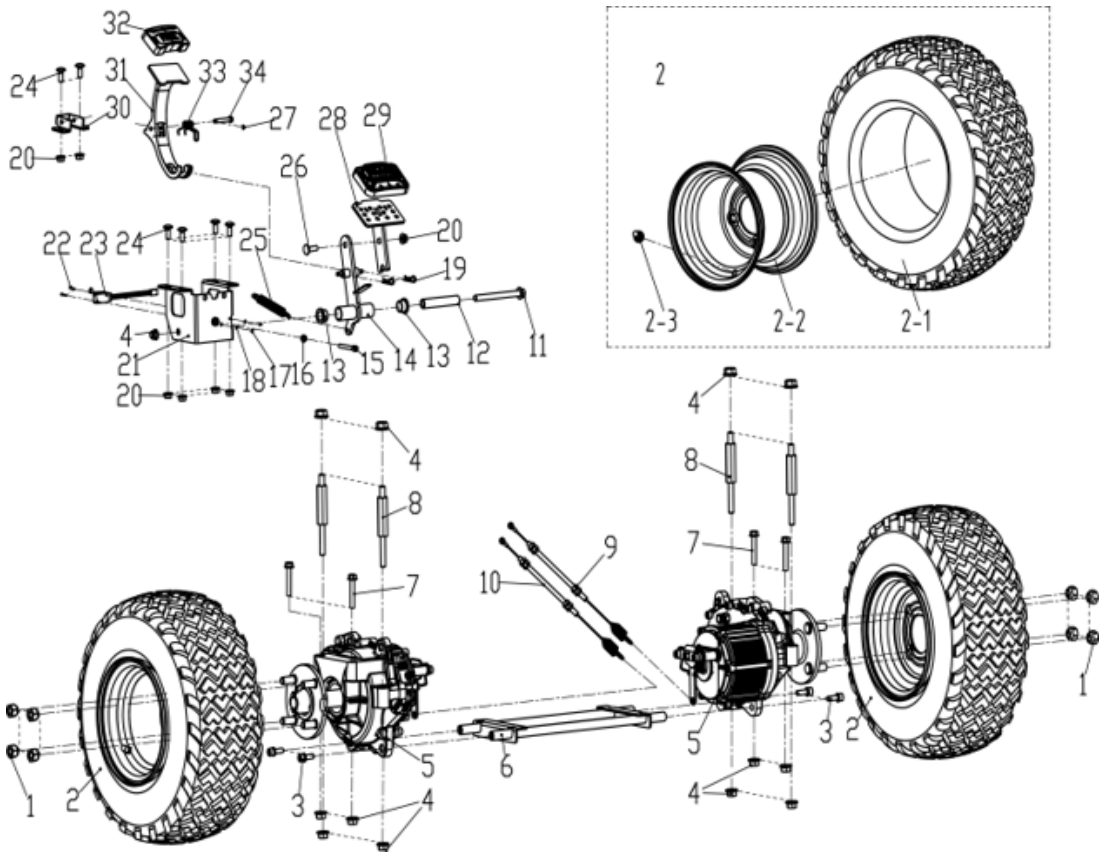

NO	PART NAME	QTY	PART #
1	HUB COVER	8	20084112
2	REAR WHEEL ASSEMBLY BZM160S	2	40053845
2-1	REAR VACUUM TIRE 18x8.5-8	1	20071176
2-2	REAR WHEEL HUB 8x7.0	1	20073902
2-3	VALVE	1	20061665
3	ELASTIC PIN 2 HEXAGON HEAD WITH SPRING FLAT WASHER TRIPLE COMBINATION BOLTS	4	20075009
4	HEXAGONAL FLANGE FACE LOCK NUT M10x1.25	13	20061405
5	TRANSMISSION ASSEMBLY BZM160S	2	20082503
6	REAR AXLE BRACKET WELDMENT	1	20091334
7	HEXAGONAL FLANGE BOLTS M10x1.25x60	4	20062514
8	DOUBLE HEAD STUD	4	20087176
9	BRAKE CABLE ASSEMBLY RIGHT	1	20086291
10	BRAKE CABLE ASSEMBLY LEFT	1	20086294
11	HEXAGONAL FLANGE BOLTS M10x1.25x110	1	20084767
12	BRACKET SPACER 16X10_5X87	1	20084763
13	NYLON SLEEVE	2	20082643
14	BRAKE ARM WELDMENT	1	20091430
15	HEXAGON SOCKET CHEESE HEAD SCREWS M6x65 FULL THREAD	1	20091789
16	HEXAGON NUTS M6	1	20061390
17	HEXAGON NUTS M3	2	20061334
18	SPRING WASHERS 3, GB93-87, BLACKENED	2	20061466
19	ELASTIC PINS 2	2	20070582
20	HEXAGON FLANGE NUTS M8	7	20061348
21	BRAKE ARM BRACKET WELDMENT	1	20091548
22	PHILLIPS PAN HEAD SCREWS M3x20	2	20051763
23	ALARM SWITCH ASSEMBLY	1	20080021
24	SEMICIRCULAR HEAD SQUARE NECK BOLTS M8x20	6	20061299
25	CUTTING TENSION SPRING FRONT	1	20062260
26	HALF ROUND HEAD SQUARE NECK BOLT M8x25	1	20078739
27	BEARING CLAMP	1	20062405
28	BRAKE PEDAL SEAT WELDMENT	1	20091497
29	BRAKE PEDAL	1	20091365
30	PARKING ARM FIXING PLATE	1	20091320
31	PARKING ARM	1	20091319
32	PARK PEDAL	1	20091402
33	PARK ARM TORSION SPRING	1	20091490
34	PARKING ARM PIN	1	20091446

DRIVE CONTROL SYSTEM

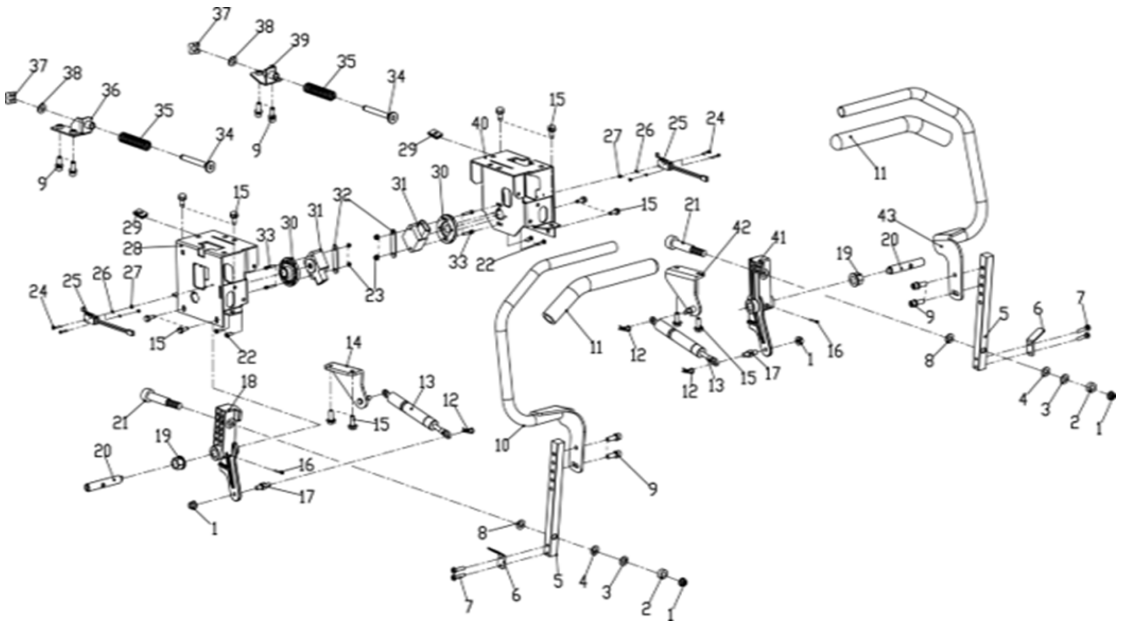

NO	PART NAME	QTY	PART #
1	HEX FLANGE LOCK NUT M8	4	20061348
2	WASHER	2	20088483
3	SADDLE ELASTIC WASHERS 10x21x1	2	20061468
4	SADDLE WASHER	2	20062509
5	HANDLE BRACKET	2	20087189
6	PRESSURE PLATE	2	20091359
7	CROSS RECESSED HEXAGON COMBINATION SCREWS M5x10	4	20089215
8	NYLON WASHERS 10x20x2	2	20091346
9	HEXAGON SOCKET CHEESE HEAD TRIPLE COMBINATION SCREWS M8x25	8	20078651
10	LEFT HANDRAIL WELDMENT	1	20091477
11	ARMREST SHEATH	2	20084764
12	ELASTIC PIN 2	4	20070576
13	DAMPERS	2	20092498
14	WELD FITTINGS FOR LEFT DAMPER HOLDER	1	20091389
15	HEXAGONAL FLANGE BOLTS 5/16-18TX3/4	12	20082799
16	HEXAGON SOCKET CHEESE HEAD SCREWS WITH SPRING WASHERSM6x30	2	20077530
17	DAMPING FIXING BOLTS	2	20092499
18	ACCELERATOR BRACKET LEFT	1	20087180
19	HEXAGONAL SHAFT SLEEVE	2	20070612
20	GAS PEDAL SWIVEL	2	20087199

21	HEXAGON HEAD STEP BOLTS	2	20087186
22	CROSS RECESSED PAN HEAD TAPPING SCREWS ST4.8x10	4	20055752
23	HEXAGONAL FLANGE FACE LOCK NUTS M5, WHITE ZINC PLATED	4	20061341
24	CROSS RECESSED PAN HEAD SCREWS M3x20	4	20051763
25	ALARM SWITCH ASSEMBLY	2	20080021
26	SPRING WASHERS 3, GB93-87, BLACKENED	4	20061466
27	HEXAGON NUTS M3	4	20061334
28	LEFT BRACKET WELDMENT	1	20091467
29	SNAP NUT M6	2	20070630
30	GAS PEDAL CONNECTOR	2	20090839
31	ZERO-TURN ANGLE SENSOR 12V	2	20091318
32	DOUBLE HOLE PLATE	2	20090982
33	HEXAGON HEAD BOLT M5x40	4	20088071
34	RESET ACTUATOR	2	20087203
35	HANDLE RESET SPRING	2	20087200
36	LEFT RESET SEAT WELDMENT	1	20091445
37	DK BLOCK 10	2	20081157
38	FLAT WASHER 10	2	20061497
39	WELD-ON RIGHT RESET SEAT	1	20091356
40	RIGHT BRACKET WELD-ON	1	20091353
41	ACCELERATION BRACKET RIGHT	1	20087204
42	WELD-ON RIGHT DAMPING MOUNT	1	20091462
43	WELD-ON RIGHT HANDRAIL	1	20091332

SEAT ASSEMBLY

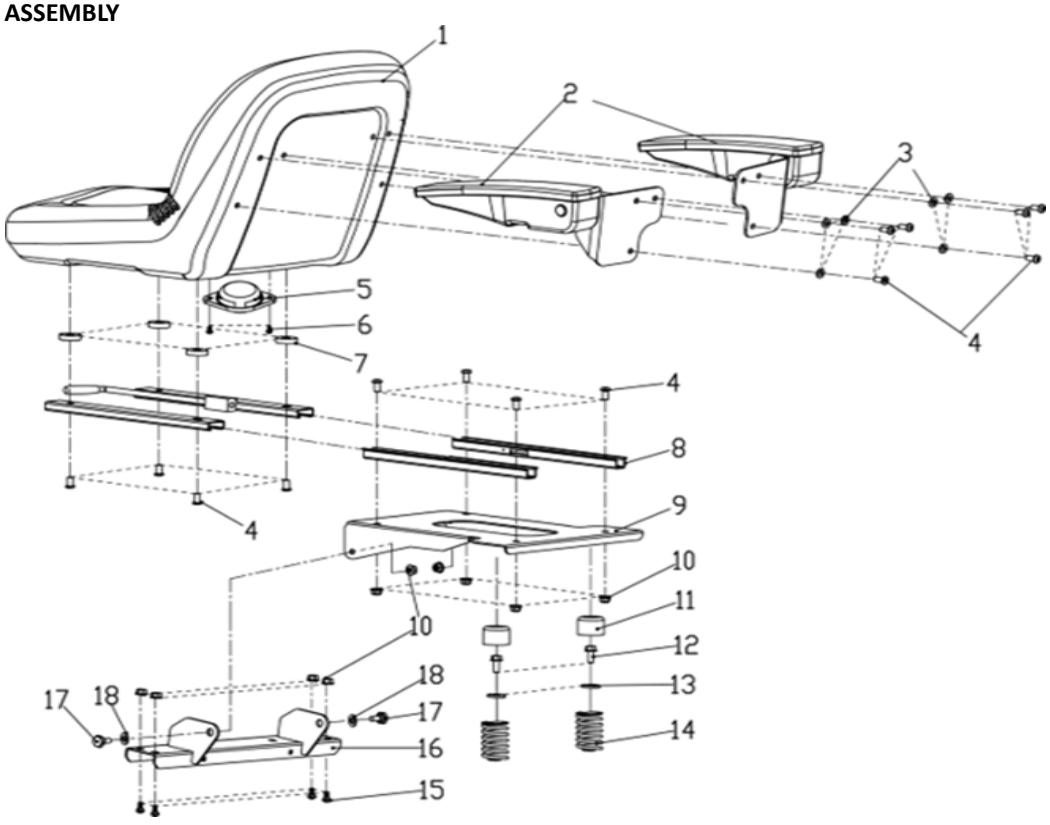

NO	PART NAME	QTY	PART #
1	SEAT ASSEMBLE	1	20073330
2	SEAT ARMRESTS	1	20062262
3	WASHER 8	6	20061426
4	SCREW M8x20	14	20062556
5	SEAT SWITCH ASSEMBLE	1	20091453
6	M5x12	2	20061411
7	WASHER 32x10.5x8	4	20062501
8	SEAT SLIDE	1	20073331
9	SEAT MOUNT PLATE ASSEMBLE	1	20095022
10	HEX FLANGE LOCK NUT M8	10	20061348
11	SPRING CAP	2	20068240
12	HEX FLANGE BOLT M18x20	2	20061274
13	BIG WASHER 8	2	20061541
14	COMPRESSION SPRING	2	20090326
15	BOLT M8x20	4	20061299
16	SEAT FRONT BRACKET WELDMENT	1	20091355
17	SHOULDER SCREW	2	20086979
18	WASHER	2	20087185

ELECTRICAL SYSTEM

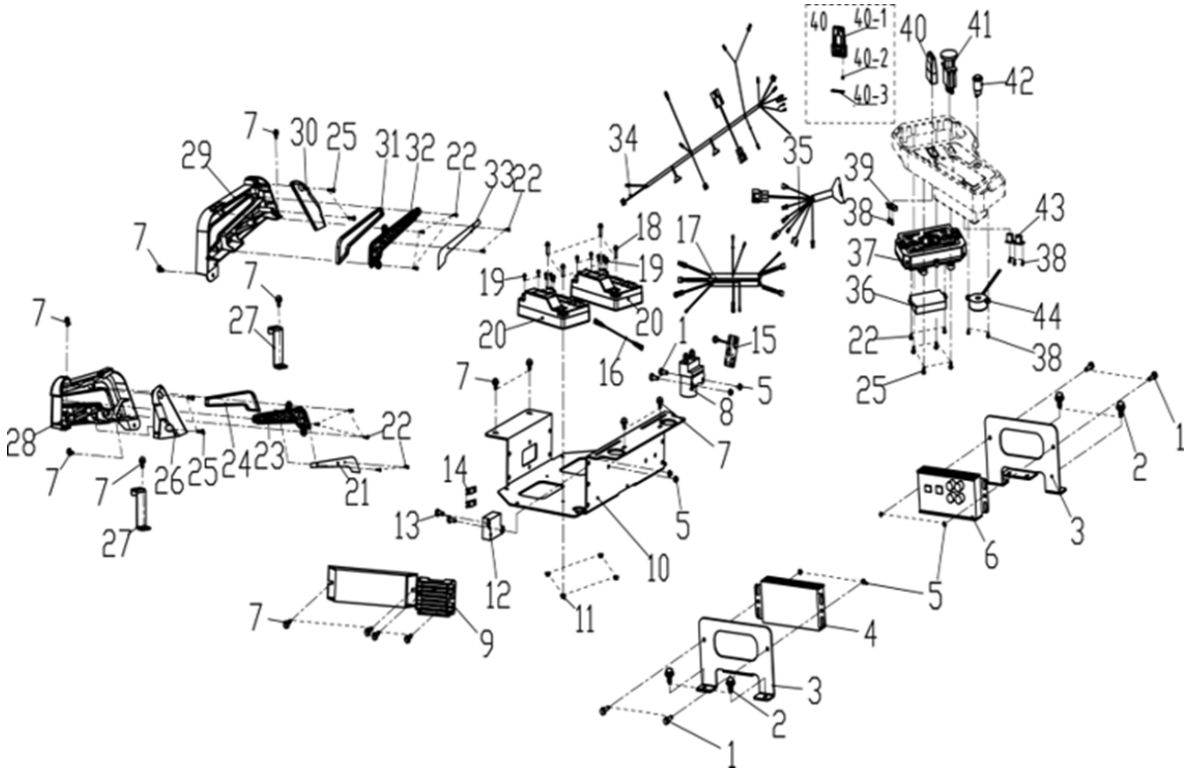

NO	PART NAME	QTY	PART #
1	SHOULDER NUT	6	20061200
2	HEXAGONAL FLANGE FACE BOLTS 5/16-18TX3/4	4	20082799
3	KNIFE CONTROL MOUNTING PLATE	2	20091434
4	KNIFE SUBCONTROLLER	1	20085103
5	HEXAGONAL FLANGE LOCKNUT M6	8	20061385
6	KNIFE MASTER CONTROLLER	1	20085104
7	HEXAGONAL FLANGE FACE TRIANGLE TOOTH SCREWS M5x12	14	20061411
8	DC CONTACTOR DC60V	1	20085099
9	BRAKE RESISTOR	1	20087212
10	ELECTRICAL MOUNTING PLATE	1	20091341
11	HEXAGONAL FLANGE FACE LOCKNUT M5, WHITE ZINC PLATED	4	20061341
12	FUSEHOLDER	1	20085102
13	CROSS RECESSED PAN HEAD SCREWS M6x16	2	20051741
14	FUSE 50A	2	20087165
15	COIL PCB ASSEMBLY	1	20090973
16	LEAD WIRE 1	1	20086213
17	POWER HARNESS	1	20086208
18	FLANGE BOLTS M5x35, DACROMET	4	20061231
19	CROSS RECESSED HEXAGON HEAD TRIPLE COMBINATION SCREWS M5x12	10	20089215
20	DRIVE CONTROLLER	2	20091315
21	LEFT HEADLIGHT HARNESS	1	20086207
22	CROSS RECESSED PAN HEAD TAPPING SCREWS ST4.2x10	12	20051776
23	LEFT HEADLIGHT INNER COVER	1	20091474
24	LEFT HEADLIGHT OUTER COVER	1	20091373
25	CROSS RECESSED PAN HEAD TAPPPING SCREWS ST4.8x19	8	20051807
26	FRONT BUMPER LEFT SIDE COVER	1	20091481
27	LAMP HOLDER SUPPORT PLATE	2	20091413
28	LEFT HEADLAMP HOLDER	1	20091348
29	RIGHT HEADLAMP HOLDER	1	20091411
30	FRONT BUMPER RIGHT SIDE COVER	1	20091301
31	RIGHT HEADLIGHT OUTER COVER	1	20091388
32	RIGHT HEADLIGHT INNER COVER	1	20091297
33	RIGHT HEADLIGHT HARNESS	1	20086205
34	CONTROLL HARNESS	1	20086204
35	CENTER CONTROL WIRING HARNESS	1	20086206
36	VOLTAGE REGULATOR	1	20086190
37	CENTER CONTROL DISPLAY	1	20091473
38	PHILLIPS PAN HEAD TAPPING SCREWS ST2.9x8	7	20051780
39	MAGNETIC SWITCH	1	20087167
40	KEY	1	40053824
40-1	KEYSHELL	1	20091095
40-2	MAGNET 4x3	1	20087170
40-3	KEY COVER	1	20091114
41	RISING KNIFE SWITCH	1	20062234
42	METAL PUSH BUTTON SWITCH 22mm	1	20091127
43	USB MODULE	1	20086293
44	BUZZER	2	20085100

ELECTRICAL SYSTEM

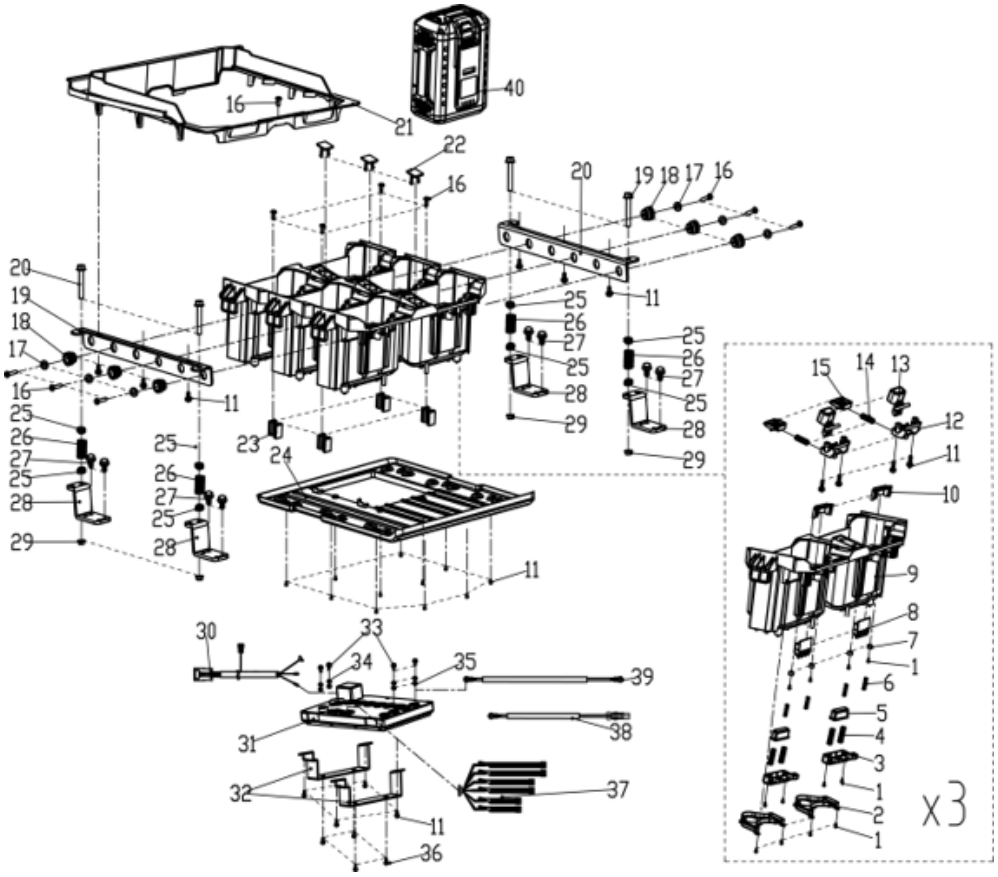

NO	PART NAME	QTY	PART #
1	SCREW ST2.9x12	36	20051775
2	AIR GUIDE HOOD	6	20087240
3	EJECTOR KNOB LIMIT PLATE	6	20088666
4	EJECTOR SPRING	12	20079681
5	EJECTOR KNOB	6	20079677
6	ELASTIC PIN 2	6	20070576
7	LIMIT CAP	12	20088670
8	TAB HOLDER (INCLUDED WITH BMU HARNESS)	2	20088669
9	BATTERY BOX	3	20087241
10	BATTERY TAB SHROUD	6	20088667
11	CROSS RECESSED PAN HEAD TAPPING SCREWS ST4.2x16	33	20055737
12	CLIP HOLDER	6	20087245
13	BATTERY PACK RELEASE BUTTON	6	20087242
14	BATTERY PACK RELEASE BUTTON	6	20079696
15	BATTERY PACK RELEASE BUTTON	6	20087246
16	CROSS RECESSED PAN HEAD TAPPING SCREWS ST4.8x19	11	20051807
17	LARGE WASHER 5x15x1	6	20054562
18	SHOCK ABSORBING RUBBER SLEEVE	6	20087214
19	HEXAGONAL FLANGE FACE BOLTS M6x65	4	20061247
20	BATTERY COMPARTMENT SIDE PLATE	2	20091383
21	BATTERY COMPARTMENT DUST COVER	1	20091433
22	KEYHOLE COVER	3	20087243
23	BATTERY COMPARTMENT CONNECTING BLOCK	4	20087247
24	BATTERY COMPARTMENT BOTTOM PLATE	1	20087248
25	LONG VIBRATION ISOLATOR M7	8	20053339
26	LONG VIBRATION DAMPING SPRING	4	20091132
27	HEXAGONAL FLANGE BOLTS 5/16-18TX3/4	8	20082799
28	BATTERY COMPARTMENT SUPPORT PLATE	4	20091404
29	HEXAGONAL FLANGE LOCKNUT M6	4	20061385
30	CHARGING HARNESS	1	20087168
31	BMU ASSEMBLY	1	40053802
32	BMU PRESSURE PLATE	2	20091055
33	HEXAGON HEAD BOLTS M8x12, WHITE ZINC PLATED	4	20087038
34	SPRING WASHERS 8, WHITE ZINC PLATED	4	20061533
35	FLAT WASHERS 8, WHITE ZINC PLATED	4	20061426
36	HEXAGONAL FLANGE FACE TRIANGLE TOOTH SCREWS M5x12	4	20061411
37	BMU WIRING HARNESS (WITH INSERT HOLDER)	1	20091051
38	BATTERY CONNECTION CABLE (NEGATIVE)	1	20091138
39	BATTERY CONNECTION CABLE (POSITIVE)	1	20091097
40	BATTERY PACK ASSEMBLY BL160-100	1-6	20089782

ELECTRICAL SYSTEM

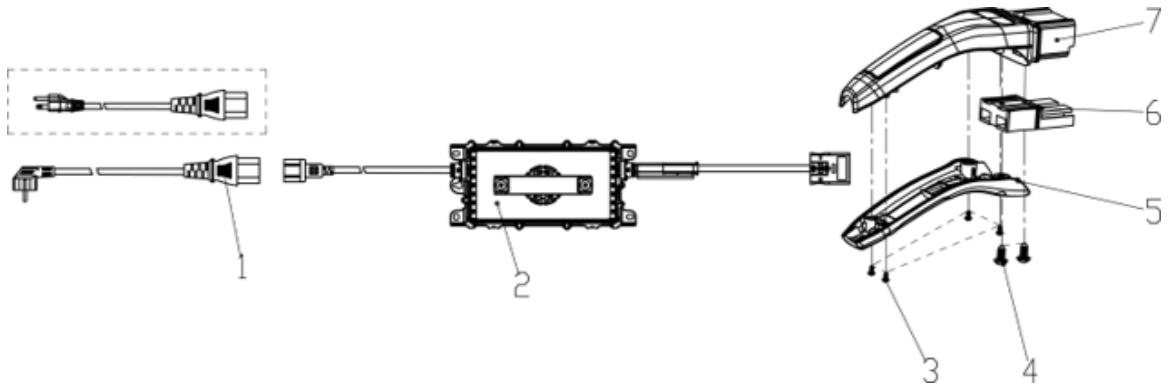

NO	PART NAME	QTY	PART #
1	PIN TAIL POWER CORD 1.2m, US STANDARD	1	20085301
2	CHARGER, INPUT 100-240V OUTPUT 60V6A, US STANDARD	1	20091720
3	PHILLIPS PAN HEAD TAPPING SCREWS ST2.9x13	4	20085532
4	CROSS RECESSED PAN HEAD TAPPING SCREWS ST4.2x16	2	20055737
5	CHARGING GUN COVER, ABS BLACK	1	20085672
6	CHARGING CONNECTOR BTM86E, SJS75X BLUE	1	20086180
7	CHARGING GUN HOLDER	1	20085673

SHELL COMPONENT

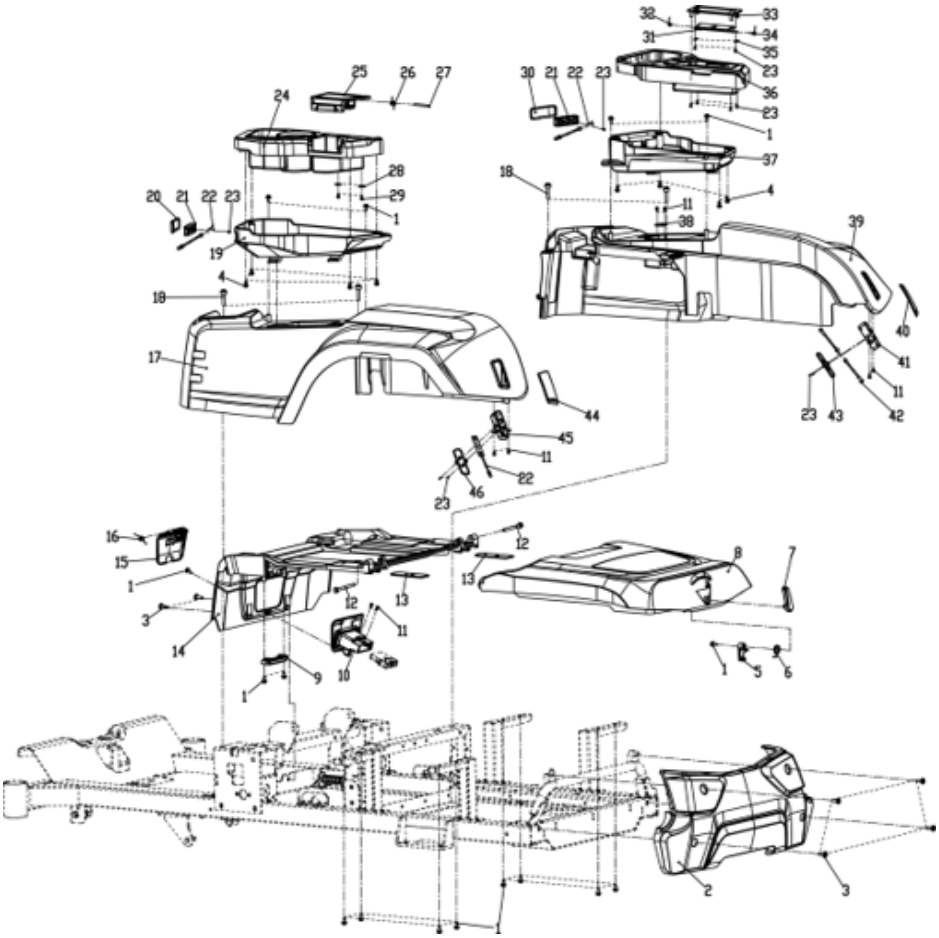

NO	PART NAME	QTY	PART #
1	SCREW ST4.8x16	16	20084298
2	REAR COVER	1	20091436
3	HEXAGON SOCKET LARGE FLAT HEAD SCREWS M6x20	6	20060858
4	SELF-TAPPING SCREWS ST4.8x16	8	20051824
5	BATTERY COMPARTMENT COVER LATCH	1	20091476
6	LOCKING HANDLE TORSION SPRING	1	20087196
7	BATTERY COMPARTMENT COVER LOCK KNOB	1	20091485
8	BATTERY COMPARTMENT COVER	1	20091505
9	CHARGE COVER PLATE	1	20091343
10	CHARGING PORT HOLDER	1	20090963
11	CROSS RECESSED PAN HEAD TAPPING SCREWS ST4.2x16	8	20055737
12	SCREW TURNBUCKLE2	2	20087211
13	REINFORCEMENT PLATE	2	20091324
14	REINFORCEMENT PLATE	1	20091350
15	CHARGING PORT COVER	1	20091491
16	CHARGE PORT TORSION SPRING	1	20087197
17	LEFT SIDE COVER	1	20091470
18	HEXAGON SOCKET CHEESE HEAD SCREWS M6x30	4	20060905
19	LEFT DECORATIVE BOX BASE	1	20091361
20	LEFT DECORATIVE LAMPSHADE	1	20091296
21	DECORATIVE LAMP HOLDER	2	20091479
22	LEFT REVERSING LAMP WIRING HARNESS	3	20086210
23	PHILLIPS PAN HEAD TAPPING SCREWS ST2.9x13	12	20085532
24	LEFT TRIM BOX COVER	1	20091314
25	STORAGE HATCH	1	20091428
26	HATCH TORSION SPRING	1	20087195
27	HATCH SWIVEL ϕ4x48	1	20087191
28	LARGE WASHER 5x15x1	2	20054562
29	CROSS RECESSED PAN HEAD TAPPING SCREWS ST4x8, BLACK ZINC PLATED	2	20051788
30	RIGHT DECORATIVE LAMPSHADE	1	20091385
31	USB HATCH HOLDER	1	20091472
32	FLIP COVER LEFT TORSION SPRING	1	20091440
33	USB HATCH COVER	1	20091452
34	FLIP-THREAD RIGHT TORSION SPRING	1	20091493
35	HATCH PRESSURE PLATE	2	20091551
36	RIGHT TRIM BOX COVER	1	20091423
37	RIGHT TRIM BOX BASE	1	20091342
38	CABLE PRESS PLATE	1	20092102
39	RIGHT SIDE COVER	1	20091518
40	RIGHT SIDE COVER LAMPSHADE	1	20091463
41	RIGHT SIDE COVER LAMP HOLDER	1	20091362
42	RIGHT REVERSE LAMP HARNESS	1	20086211
43	RIGHT SIDE COVER LAMP HOLDER COVER	1	20091349
44	LEFT SIDE COVER LAMPSHADE	1	20091464
45	LEFT SIDE COVER LAMP HOLDER	1	20091354
46	LEFT SIDE LAMP HOLDER COVER	1	20091416

BMU ASSEMBLY

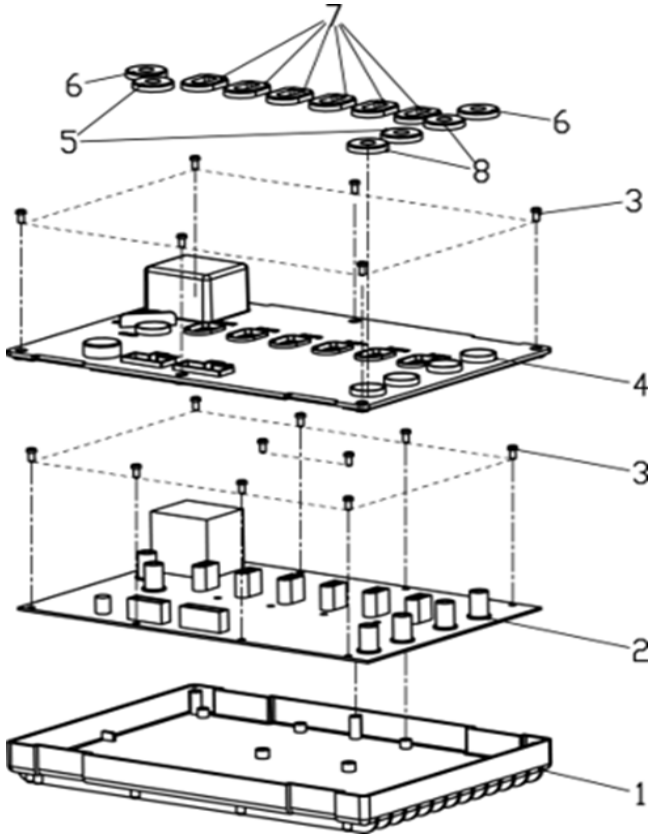

NO	PART NAME	QTY	PART #
1	BMU HOUSING	1	20090929
2	BMU INTEGRATED CIRCUIT BOARDS	1	20090848
3	CROSS RECESSED PAN HEAD SCREWS M3x8, WHITE ZINC PLATED	16	20051751
4	BMU COVER	1	20090923
5	SOLDER POST SEAL (BLACK)	2	20090945
6	SOLDER POST SEAL (RED)	2	20090993
7	XT60 SEAL	6	20090987
8	WELD POST SEAL (YELLOW)	2	20090936

GRASS COVER ATTACHMENT

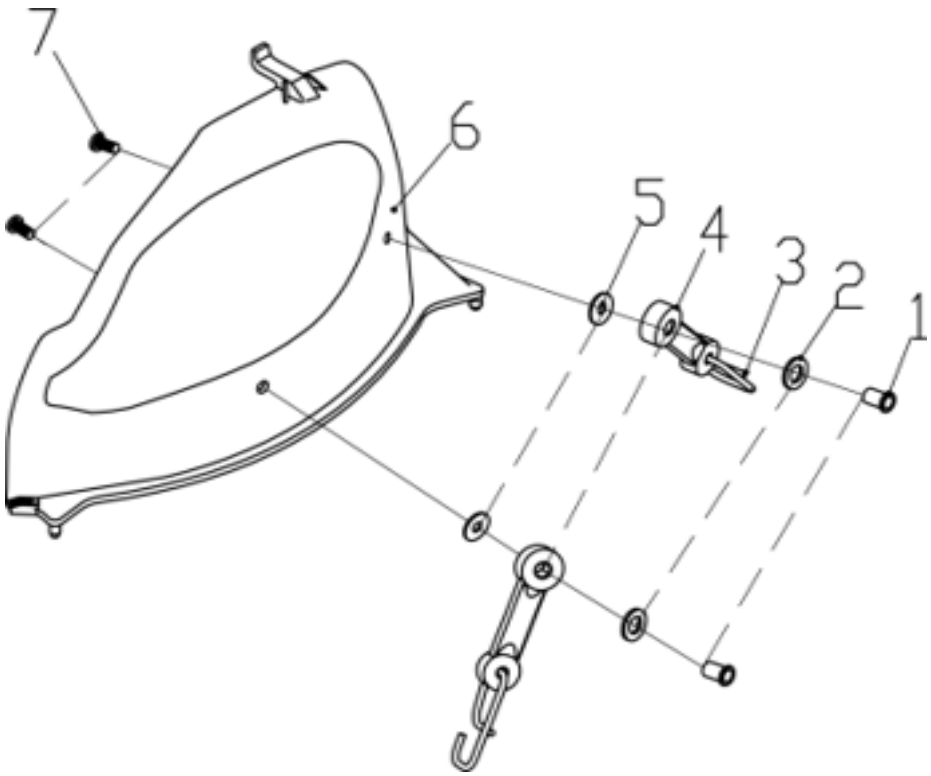

NO	PART NAME	QTY	PART #
1	NUT M6×13.5	2	20061423
2	WASHER 10	2	20061542
3	HOOK	2	20071033
4	BELT	2	20071032
5	WASHER 6	2	20061539
6	MULCH COVER TTM98S	1	20085128
7	SCREW M6×16	2	20061013

PRORUN regularly improves our products, and you may find slight differences between your machine and the descriptions contained within this operator's manual. Modifications can be made to the machine without notice and without the obligation to update the manual, providing that the essential safety and functional characteristics remain unaltered. Contact PRORUN Customer Service with any questions and for current specifications.

PRORUN / TOPSUN USA INC.
10130 Perimeter Parkway, Suite 140
Charlotte, NC 28216
www.proruntools.com

Zhejiang Zhongjian Technology Co., Ltd Web: www.topsunpower.cc
E-mail: sales@topsunpower.cc
ADD: No.155 Mingyuan North AVE, Economic Development Zone, Yongkang, Zhejiang, 321300, P.R. CHINA
Made in China