Form No. 3478-107 Rev A

TORO®

Count on it.

Operator's Manual

TRX-16, TRX-20, and TRX-26 Trenchers

Model No. 22972—Serial No. 418000000 and Up
Model No. 22972G—Serial No. 400000000 and Up
Model No. 22972HD—Serial No. 400000000 and Up
Model No. 22973—Serial No. 418000000 and Up
Model No. 22973G—Serial No. 404710000 and Up
Model No. 22974—Serial No. 418000000 and Up

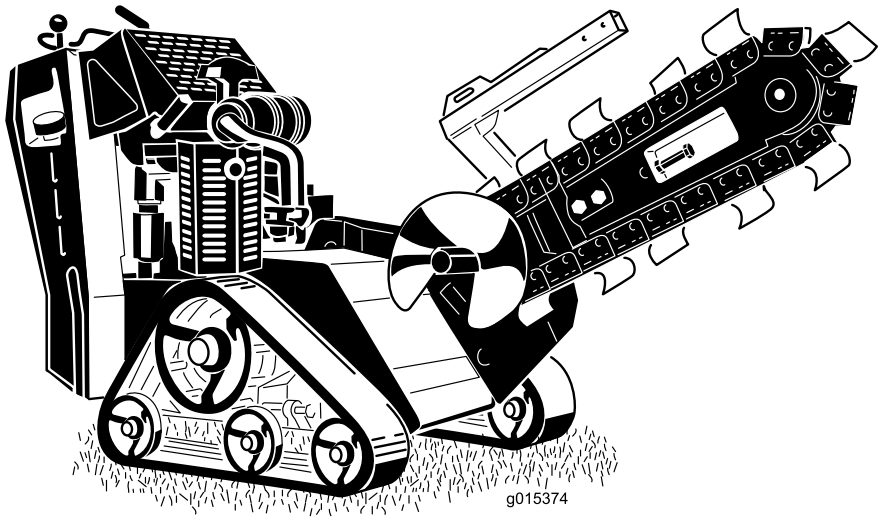

Register at www.Toro.com.
Original Instructions (EN)

3478-107

This product complies with all relevant European directives; for details, please see the separate product specific Declaration of Conformity (DOC) sheet.

It is a violation of California Public Resource Code Section 4442 or 4443 to use or operate the engine on any forest-covered, brush-covered, or grass-covered land unless the engine is equipped with a spark arrester, as defined in Section 4442, maintained in effective working order or the engine is constructed, equipped, and maintained for the prevention of fire.

The enclosed engine owner's manual is supplied for information regarding the US Environmental Protection Agency (EPA) and the California Emission Control Regulation of emission systems, maintenance, and warranty. Replacements may be ordered through the engine manufacturer.

⚠ WARNING

CALIFORNIA
Proposition 65 Warning

The engine exhaust from this product contains chemicals known to the State of California to cause cancer, birth defects, or other reproductive harm.

Battery posts, terminals, and related accessories contain lead and lead compounds, chemicals known to the State of California to cause cancer and reproductive harm. Wash hands after handling.

Use of this product may cause exposure to chemicals known to the State of California to cause cancer, birth defects, or other reproductive harm.

Introduction

This machine is designed to dig trenches in soil to bury cabling and piping for various applications. It is not intended to cut rock, wood, or any other material other than soil. Using this product for purposes other than its intended use could prove dangerous to you and bystanders. Do not modify the machine or attachments.

This machine should be operated, serviced, and repaired only by professionals familiar with its characteristics and acquainted with the relevant safety procedures.

Read this information carefully to learn how to operate and maintain your product properly and to avoid injury and product damage. You are responsible for operating the product properly and safely.

Visit www.Toro.com for product safety and operation training materials, accessory information, help finding a dealer, or to register your product.

Whenever you need service, genuine Toro parts, or additional information, contact an Authorized Service Dealer or Toro Customer Service and have the model and serial numbers of your product ready. Figure 1 illustrates the location of the model and serial numbers on the product. Write the numbers in the space provided.

Important: **With your mobile device, you can scan the QR code on the serial number decal (if equipped) or visit www.Toro.com to access warranty, parts, and other product information.**

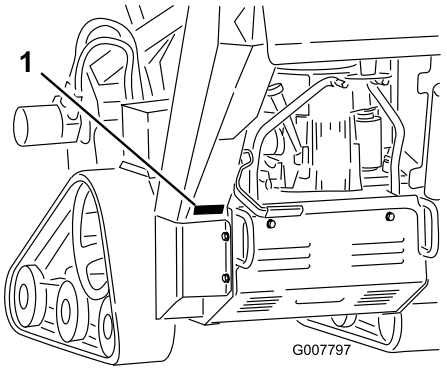

g007797

Figure 1

1. Model and serial number plate

Model No. _____

Serial No. _____

This manual identifies potential hazards and has safety messages identified by the safety-alert symbol

© 2025—The Toro® Company
8111 Lyndale Avenue South
Bloomington, MN 55420

Contact us at www.Toro.com.
Printed in the USA
All Rights Reserved

(Figure 2), which signals a hazard that may cause serious injury or death if you do not follow the recommended precautions.



g000502

Figure 2

1. Safety-alert symbol

This manual uses 2 words to highlight information. **Important** calls attention to special mechanical information and **Note** emphasizes general information worthy of special attention.

Contents

Safety 4
General Safety 4
Safety and Instructional Decals 5
Setup 10
1 Installing the Boom and Chain 10
2 Installing the Safety Bar 11
3 Installing the Crumber Extension Bar 12
4 Checking the Fluid Levels 12
5 Charging the Battery (Electric-Start Models Only) 12
Product Overview 13
Controls 13
Key Switch 13
Specifications 16
Attachments/Accessories 16
Before Operation 17
Before Operation Safety 17
Adding Fuel 17
Performing Daily Maintenance 18
During Operation 19
During Operation Safety 19
Starting the Engine 20
Driving the Machine 20
Shutting off the Engine 20
Digging a Trench 21
Operating Tips 21
After Operation 22
After Operation Safety 22
Moving a Non-Functioning Machine 22
Securing the Machine for Transport 22
Lifting the Machine 22
Maintenance 23
Maintenance Safety 23
Recommended Maintenance Schedule(s) 23
Pre-Maintenance Procedures 24
Removing the Cover Plate 24
Removing the Bottom Shield 25
Lubrication 25
Greasing the Machine 25
Greasing the Trencher Housing 26
Engine Maintenance 27
Engine Safety 27
Servicing the Air Cleaner 27
Servicing the Engine Oil 29
Servicing the Spark Plug(s) 31
Fuel System Maintenance 32
Draining the Fuel Tank 32
Replacing the Fuel Filter 33
Electrical System Maintenance 33
Electrical System Safety 33
Servicing the Battery 33
Replacing the Fuses (Models 22973 and 22974) 35
Drive System Maintenance 36
Servicing the Tracks 36
Brake Maintenance 38
Testing the Parking Brake 38
Belt Maintenance 39
Replacing the Pump-Drive Belt 39
Controls System Maintenance 39
Adjusting the Traction-Control Alignment 39
Hydraulic System Maintenance 41
Hydraulic System Safety 41
Hydraulic Fluid Specifications 41
Checking the Hydraulic-Fluid Level 42
Replacing the Hydraulic Filter 42
Changing the Hydraulic Fluid 43
Trencher Maintenance 44
Replacing the Digging Teeth 44
Checking and Adjusting the Digging Chain and Boom 44
Replacing the Drive Sprocket 45
Cleaning 46
Removing Debris from the Machine 46
Storage 46
Storage Safety 46
Storage 46
Troubleshooting 48
Schematics 50

Safety

⚠ DANGER

There may be buried utility lines in the work area. Digging into them may cause a shock or an explosion.

Have the property or work area marked for buried lines and do not dig in marked areas. Contact your local marking service or utility company to have the property marked (for example, in the US, call 811 or in Australia, call 1100 for the nationwide marking service).

General Safety

This product is capable of amputating hands and feet. Always follow all safety instructions to avoid serious injury or death.

- Have the property or work area marked for buried lines and other objects, and do not dig in marked areas.
- Keep your hands and feet away from moving teeth, auger, or other parts.
- Keep bystanders and pets away from the machine.
- Read and understand the content of this *Operator's Manual* before starting the engine.
- Never allow children or untrained people to operate the machine.
- Do not operate the machine without the guards and other safety protective devices in place and working on the machine.
- Use your full attention while operating the machine. Do not engage in any activity that causes distractions; otherwise, injury or property damage may occur.
- Stop the machine, shut off the engine, and remove the key before servicing, fueling, or unclogging the machine.

Improperly using or maintaining this machine can result in injury. To reduce the potential for injury, comply with these safety instructions and always pay attention to the safety-alert symbol, which means Caution, Warning, or Danger—personal safety instruction. Failure to comply with these instructions may result in personal injury or death.

Safety and Instructional Decals

Safety decals and instructions are easily visible to the operator and are located near any area of potential danger. Replace any decal that is damaged or missing.

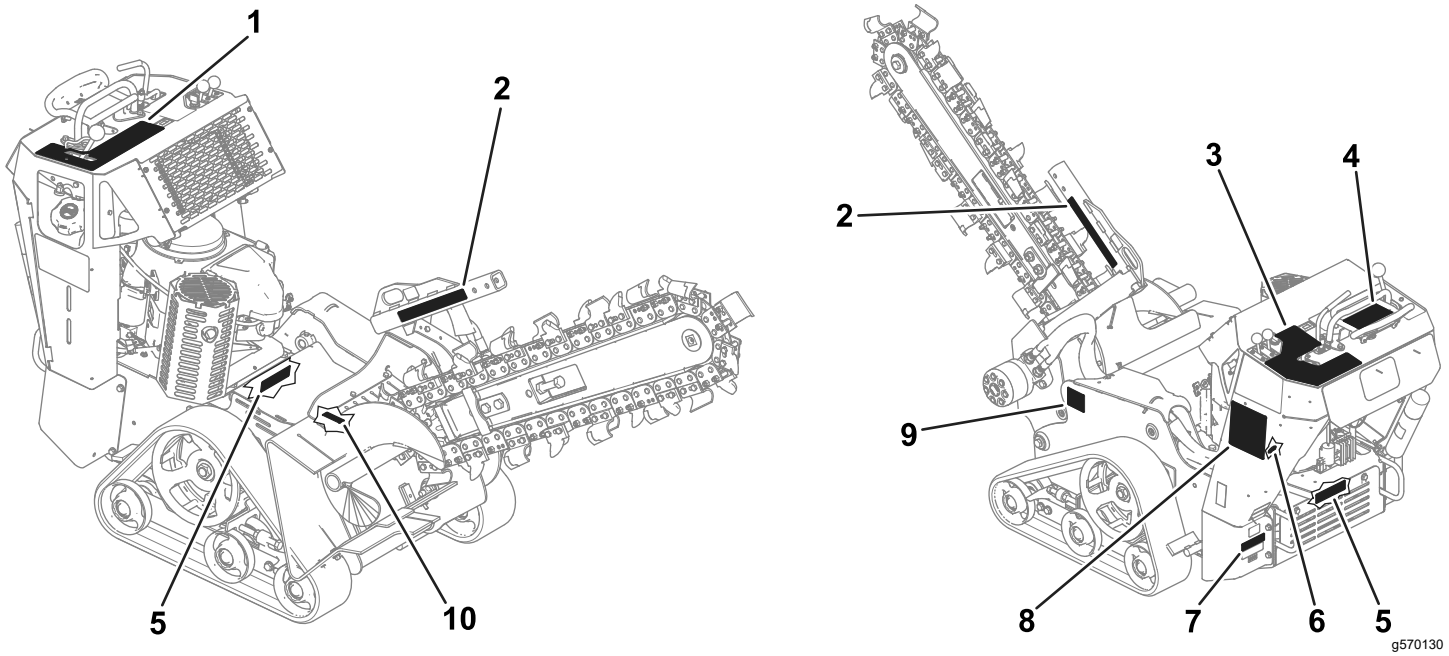

Figure 3

Safety decal locations—TRX-16 shown

1. 115-1231
2. 99-9952
3. 115-1230
4. 115-4020
5. 93-7814 (inside machine)
6. 107-8495 (inside machine)
7. 133-8062
8. 137-3873
9. 100-4650
10. 93-6686 (inside machine)



Battery Symbols

Some or all of these symbols are on your battery.

1. Explosion hazard
2. No fire, open flame, or smoking
3. Caustic liquid/chemical burn hazard
4. Wear eye protection.
5. Read the *Operator's Manual*.
6. Keep bystanders away from the battery.
7. Wear eye protection; explosive gases can cause blindness and other injuries.
8. Battery acid can cause blindness or severe burns.
9. Flush eyes immediately with water and get medical help fast.
10. Contains lead; do not discard

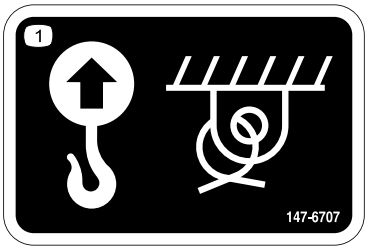

147-6707

1. Lift point and tie-down point

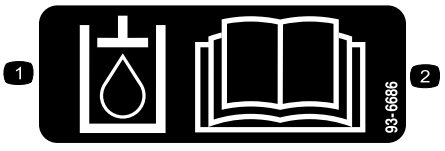

93-6686

1. Hydraulic fluid
2. Read the *Operator's Manual.*

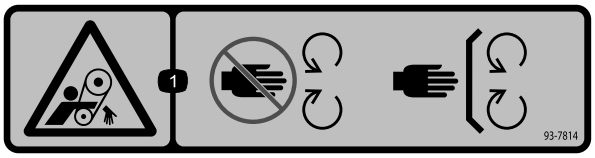

decal93-7814

93-7814

1. Entanglement hazard, belt—stay away from moving parts; keep all guards and shields in place.

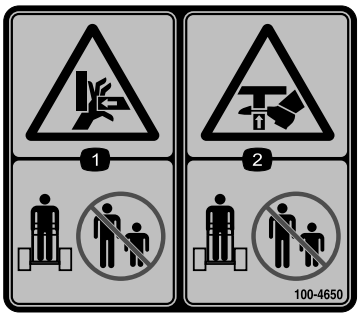

decal100-4650

100-4650

1. Crushing hazard of hand—keep bystanders away.
2. Crushing hazard of foot—keep bystanders away.



decal107-8495

107-8495

1. Parking brake

⚠ WARNING: Cancer and Reproductive Harm - www.P65Warnings.ca.gov.
For more information, please visit www.ttcoCAProp65.com

CALIFORNIA SPARK ARRESTER WARNING

Operation of this equipment may create sparks that can start fires around dry vegetation. A spark arrester may be required. The operator should contact local fire agencies for laws or regulations relating to fire prevention requirements.

133-8062

decal133-8062

133-8062

Decal 137-3873 is for TRX-16 and TRX-20 models only.

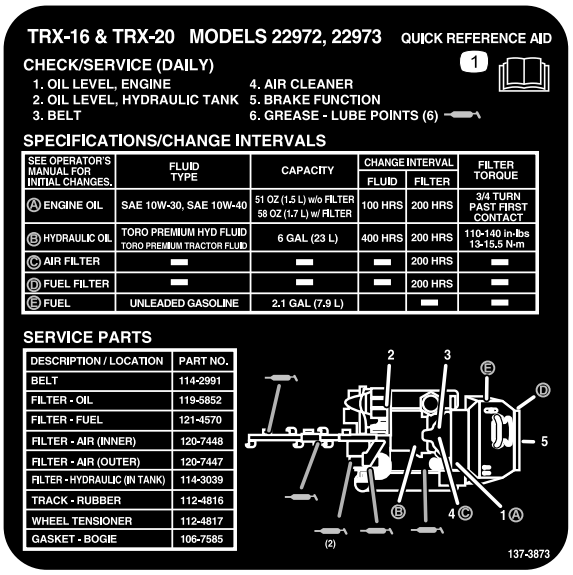

decal137-3873

137-3873

1. Read the *Operator's Manual*.

Decal 137-3874 is for TRX-26 models only.

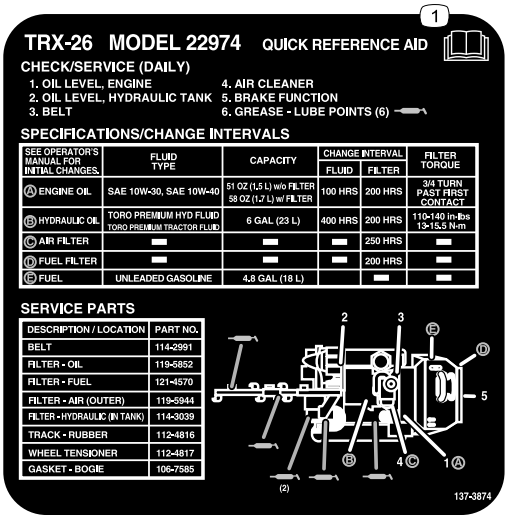

decal137-3874

137-3874

1. Read the *Operator's Manual*.

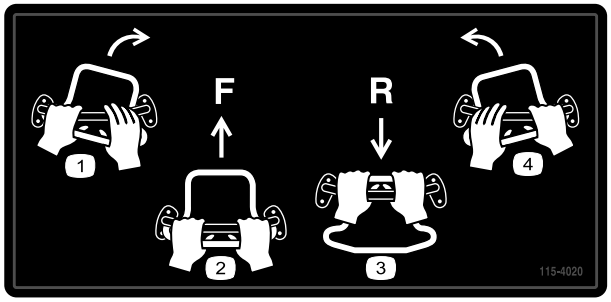

decal115-4020

115-4020

1. Turn right
2. Forward
3. Reverse
4. Turn left



decal99-9952

99-9952

1. Cutting hazard, chain and auger—stay away from moving parts and keep bystanders away from the machine.
2. Warning—shut off the engine and remove the key before preforming and maintenance or repairs.
3. Explosion and/or electric shock hazard—do not dig in areas with buried gas or power lines.

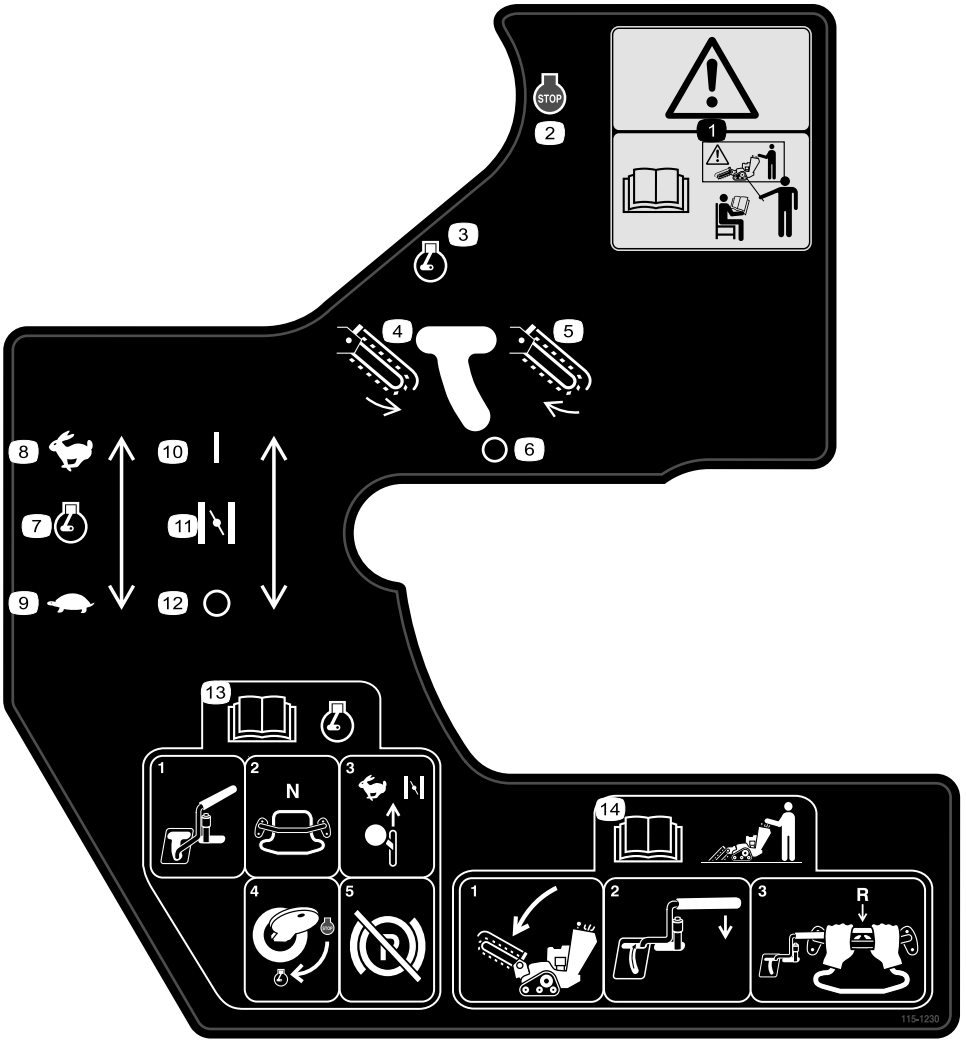

decal115-1230

115-1230

1. Warning—do not operate this machine unless you are trained.
2. Engine—shut off
3. Engine—run
4. Trencher chain—reverse
5. Trencher chain—forward
6. Trencher chain—off
7. Engine throttle
8. Fast
9. Slow
10. Choke
11. On/Closed
12. Off/Open
13. Read the *Operator's Manual* before starting the engine; to start the engine, move the trencher control lever into the Off position, place the traction control in Neutral, move the engine speed to Fast and the choke to On/Closed, turn the key to run, and release the parking brake once the engine has started.
14. Read the *Operator's Manual* before operating the trencher; to operate the trencher, lower the boom, move the trencher control lever to the reference bar, pull the traction control rearward to move in reverse and dig the trench.

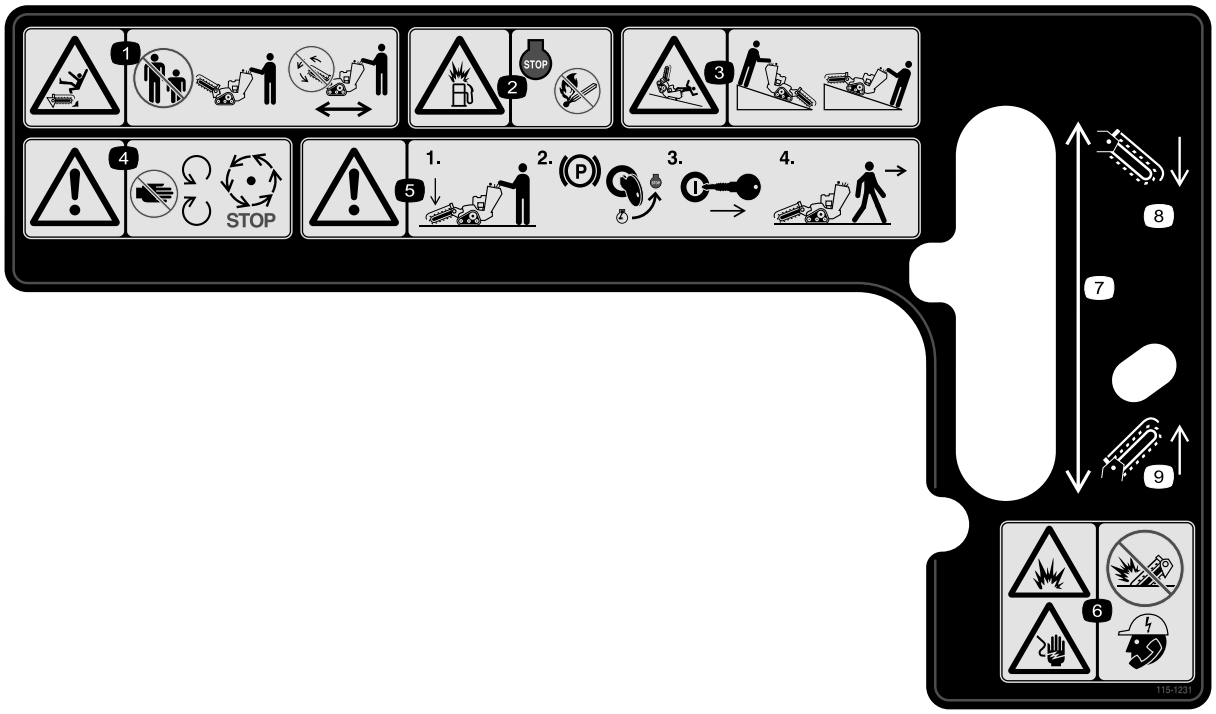

decal115-1231

115-1231

1. Cutting/dismemberment hazard, trencher—keep bystanders away; do not operate the trencher chain while transporting the machine.
2. Explosion hazard, fueling—shut off the engine and extinguish all flames when fueling.
3. Tipping/crushing hazard—lower the trencher head when operating on slopes.
4. Warning—stay away from moving parts; wait for all moving parts to stop.
5. Warning—lower the boom, engage the parking brake and shut off the engine, and remove the key before leaving the machine.
6. Explosion hazard; electrical shock hazard—do not operate if power lines may be present; call your local utility company.
7. Boom elevation
8. Lower the boom.
9. Raise the boom.

Setup

Loose Parts

Use the chart below to verify that all parts have been shipped.

Procedure	Description	Qty.	Use
1	Boom (sold separately) Chain (sold separately)	1 1	Install the boom and chain.
2	Safety extension bar—supplied with the boom (sold separately) Bolt—supplied with the boom (sold separately) Locknut—supplied with the boom (sold separately)	1 2 2	Install the safety extension bar (trenchers without a crumber attachment only).
3	Crumber extension bar—supplied with the boom (sold separately) Bolt—supplied with the boom (sold separately) Locknut—supplied with the boom (sold separately)	1 2 2	Install the crumber extension bar.
4	No parts required	–	Check the fluid levels.
5	No parts required	–	Charge the battery (electric-start models only).

1

Installing the Boom and Chain

Parts needed for this procedure:

1	Boom (sold separately)
1	Chain (sold separately)

Procedure

Important: **There are several boom and chain size configurations available. Refer to your Authorized Service Dealer to obtain the appropriate boom and chain to meet your requirements.**

1. Park the machine on a level surface and engage the parking brake.
2. Shut off the engine and remove the key.
3. Remove the bolt, 2 saddle washers, and nut securing the spoils auger and remove the auger (Figure 4).

   Note: Save the fasteners for future use.

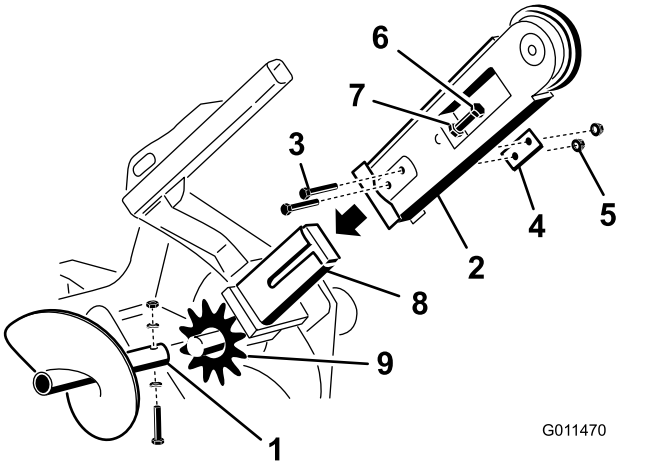

Figure 4

1. Spoils auger
2. Boom
3. Bolts
4. Double washer
5. Nuts
6. Adjusting bolt
7. Jam nut
8. Arm on the drive head
9. Drive sprocket

4. Remove the 2 bolts, nuts, and double washers from the sides of the boom (Figure 4).
5. Loosen the adjusting bolt and jam nut (Figure 4).
6. Slide the boom over the arm on the drive head.

7. Install the 2 bolts, nuts, and double washers removed in step 4 through the boom and arm, but do not tighten them.
8. If the chain is not connected, connect the links by pressing or hammering the clevis pin supplied with the chain through the links.

   Important: **To avoid bending the chain links, place blocks under and between the links when hammering the clevis pin through.**
9. Secure the clevis pin with the cotter pin supplied with the chain.
10. Loop the digging chain over the auger drive shaft and onto the drive sprocket, ensuring that the digging teeth point forward on the upper span.
11. Set the upper span of the chain into place on the trencher boom, then wrap the chain around the roller at the end of the boom.
12. Thread the adjustment bolt into the boom and turn it in until there is 3.8 to 6.3 cm (1-1/2 to 2-1/2 inches) of slack in the chain on the bottom span.
13. Thread the jam nut down the adjusting bolt and tighten it securely against the boom.
14. Torque the 2 bolts and nuts securing the boom to 183 to 223 N·m (135 to 165 ft-lb).
15. Install the spoils auger using the bolt, 2 saddle washers, and nut that you removed previously.
16. Torque the bolt and nut to 101 N·m (75 ft-lb).

2

Installing the Safety Bar

Trenchers without a Crumber Attachment Only

Parts needed for this procedure:

1	Safety extension bar—supplied with the boom (sold separately)
2	Bolt—supplied with the boom (sold separately)
2	Locknut—supplied with the boom (sold separately)

Procedure

Install the safety extension bar (supplied with the boom) over the end of the safety-rail assembly and secure it using the 2 bolts and locknuts.

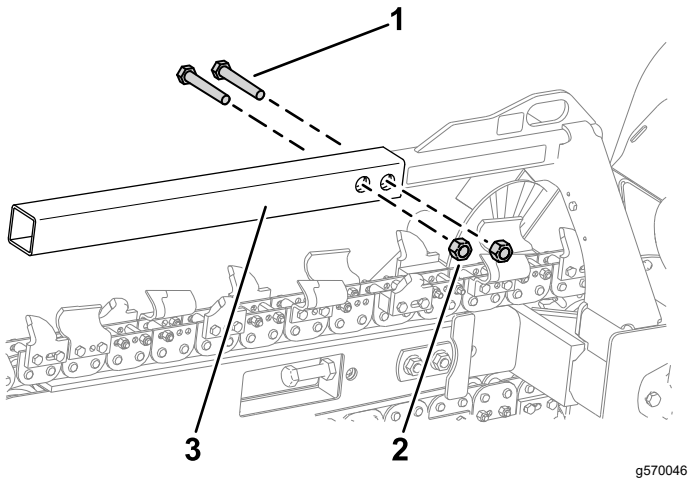

Figure 5

1. Bolt—1/2 x 3 inches (2)
2. Locknut—1/2 inch (2)
3. Safety extension bar

3

Installing the Crumber Extension Bar

Trenchers with a Crumber Attachment Only

Parts needed for this procedure:

1	Crumber extension bar—supplied with the boom (sold separately)
2	Bolt—supplied with the boom (sold separately)
2	Locknut—supplied with the boom (sold separately)

Procedure

Install the crumber extension bar (supplied with the boom) over the end of the safety-rail assembly and secure it using the 2 bolts and locknuts.

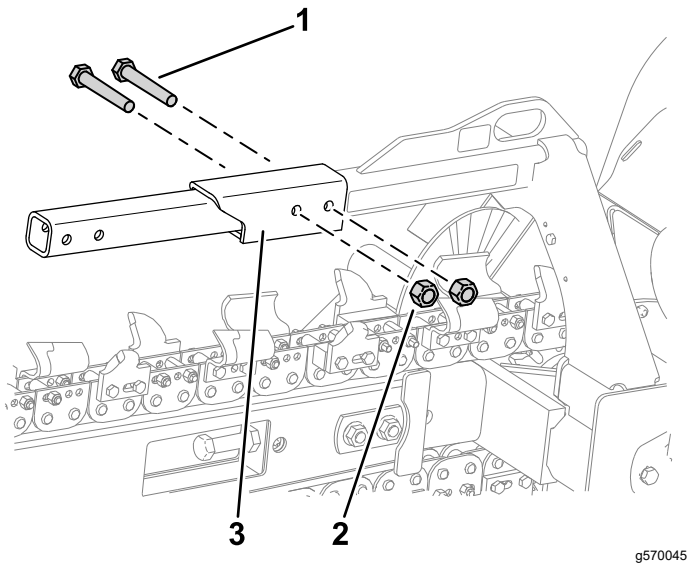

Figure 6

1. Bolt—1/2 x 3 inches (2)
2. Locknut—1/2 inch (2)
3. Crumber extension bar

4

Checking the Fluid Levels

No Parts Required

Procedure

Before starting the engine for the first time, check the engine-oil and hydraulic-fluid levels. Refer to the following sections for more information:

- Checking the Engine-Oil Level (page 29)
- Checking the Hydraulic-Fluid Level (page 42)

5

Charging the Battery (Electric-Start Models Only)

No Parts Required

Procedure

Charge the battery; refer to Charging the Battery (page 34) for more information.

Product Overview

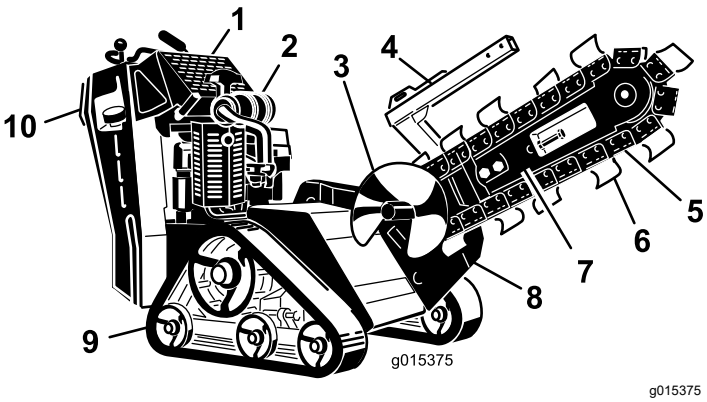

g015375

Figure 7

1.	Control panel	4.	Chain guard	7.	Boom	10.	Reverse safety plate
2.	Engine	5.	Chain	8.	Trencher head		
3.	Spoils auger	6.	Digging teeth	9.	Track		

Controls

Become familiar with all the controls (Figure 8) before you start the engine and operate the machine.

Control Panel

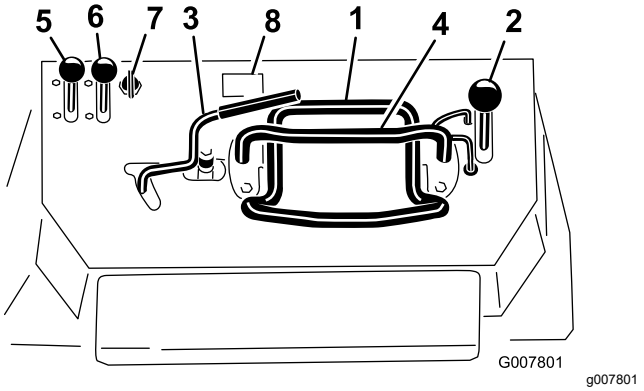

g007801

Figure 8

1.	Traction control	5.	Throttle lever
2.	Boom-elevation lever	6.	Choke lever
3.	Trencher control lever	7.	Key switch
4.	Reference bar	8.	Hour meter

Key Switch

Recoil-Start Machines

The key switch has 2 positions: OFF and RUN. Refer to Starting the Engine (page 20).

Electric-Start Machines

The key switch has 3 positions: OFF, RUN, and START. Refer to Starting the Engine (page 20).

Throttle Lever

Move the control forward to increase the engine speed and rearward to decrease the engine speed.

Choke Lever

Before starting a cold engine, move the choke lever forward. After the engine starts, regulate the choke to keep the engine running smoothly. As soon as possible, move the choke lever all the way rearward.

Note: A warm engine requires little or no choking.

Hour Meter

The hour meter displays the number of hours of operation that have been logged on the machine.

Reference Bar

When driving the machine, use the reference bar as a handle and a leverage point for controlling the machine. To ensure smooth, controlled operation, do not take both hands off the reference bar while operating the machine.

Traction Control

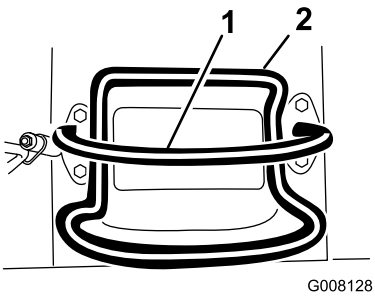

g008128

Figure 9

1. Reference bar
2. Traction control

- To move forward, move the traction control forward (Figure 10).

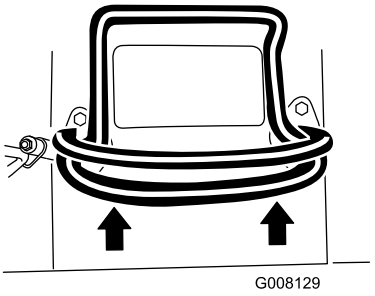

g008129

Figure 10

- To move rearward, move the traction control rearward (Figure 11).

  Important: **When reversing, look behind you for obstructions and keep your hands on the reference bar.**

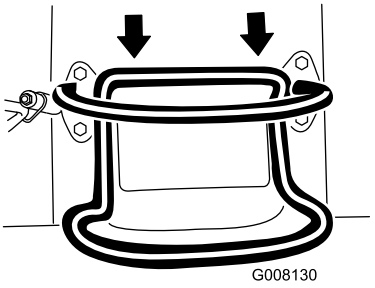

g008130

Figure 11

- To turn right, rotate the traction control clockwise (Figure 12).

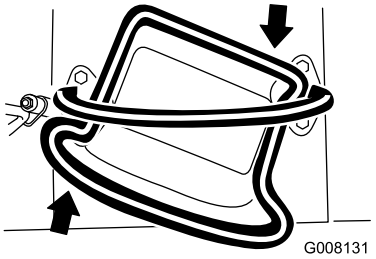

g008131

Figure 12

- To turn left, rotate the traction control counterclockwise (Figure 13).

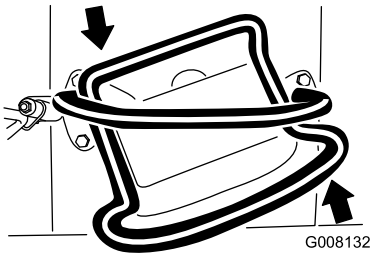

g008132

Figure 13

- To stop the machine, release the traction control (Figure 9).

Note: The farther you move the traction control in any direction, the faster the machine moves in that direction.

Boom-Elevation Lever

To lower the boom, slowly move the lever forward (Figure 14).

To raise the boom, slowly move the lever rearward (Figure 14).

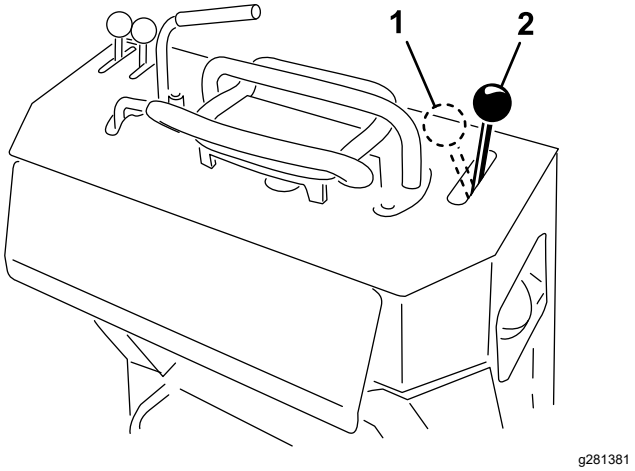

Figure 14

1. Raise the boom
2. Lower the boom

Boom-Elevation Lock

The boom-elevation lock secures the boom-elevation lever so that you cannot push it forward. This helps to ensure that no one accidentally lowers the boom during maintenance. Secure the boom with the lock anytime you need to stop the machine with the boom raised.

To set the lock, lift up on it so it clears the hole in the control panel and swing it to the right in front of the boom elevation lever, pushing it down into the locked position (Figure 15).

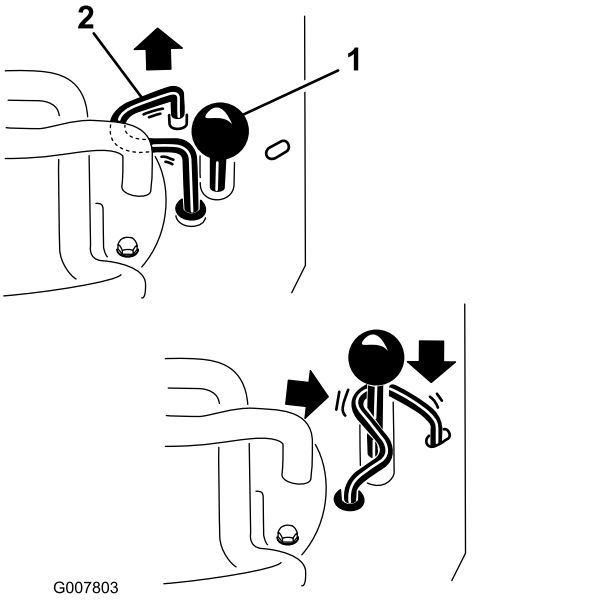

Figure 15

1. Boom-elevation lever
2. Boom-elevation lock

Trencher Control Lever

To dig with the trencher, rotate the lever rearward and pull it down to the reference bar (Figure 16, number 1).

To reverse the trencher head, rotate the lever rearward, then move it left into the upper slot (Figure 16, number 2).

If you release the lever, it will automatically return to the neutral position (Figure 16, number 3), stopping the chain.

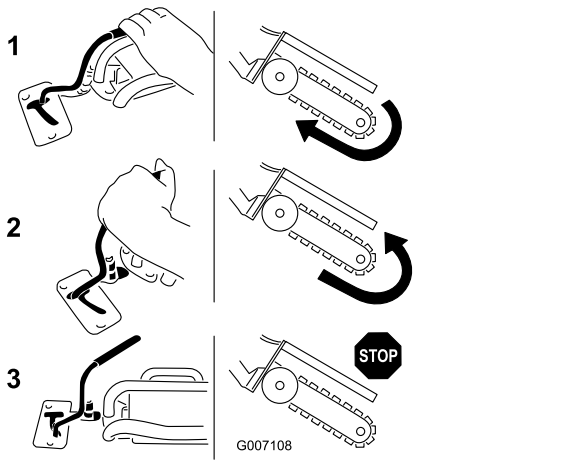

Figure 16

1. Forward
2. Reverse
3. Neutral

Parking-Brake Lever

- To engage the parking brake, pull the brake lever rearward and up (Figure 17).
- To disengage the parking brake, pull the lever rearward and then down (Figure 17).

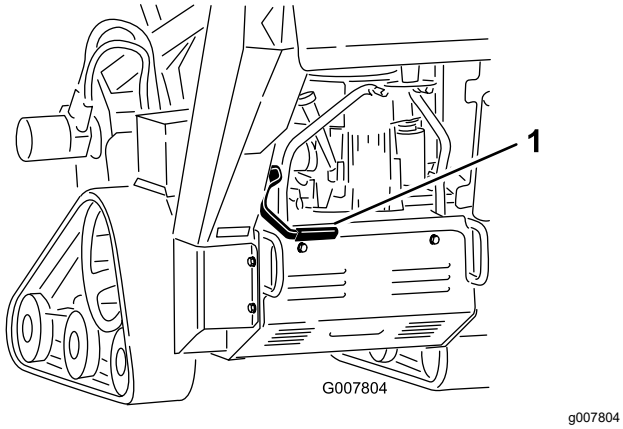

Figure 17

1. Parking-brake lever (in the disengaged position)

Specifications

Note: Specifications and design are subject to change without notice.

Width	86 cm (33.8 inches)
Length with 70 cm (24 inch) boom	209.5 cm (82.5 inches)
Length with 91.4 cm (36 inch) boom	235 cm (92.6 inches)
Length with 122 cm (48 inch) boom (Model 22974 only)	282.5 cm (111.2 inches)
Height	117 cm (46 inches)
Weight (Model 22972)*	499 kg (1,100 lb)
Weight (Model 22973)*	538 kg (1,185 lb)
Weight (Model 22974)*	578 kg (1,208 lb)

* A 91.4 cm (36 inch) boom and chain adds about 27 kg (60 lb) to the listed weight.

Attachments/Accessories

A selection of Toro approved attachments and accessories is available for use with the machine to enhance and expand its capabilities. Contact your Authorized Service Dealer or authorized Toro distributor or go to www.Toro.com for a list of all approved attachments and accessories.

To ensure optimum performance and continued safety certification of the machine, use only genuine Toro replacement parts and accessories. Replacement parts and accessories made by other manufacturers could be dangerous, and such use could void the product warranty.

Operation

Note: Determine the left and right sides of the machine from the normal operating position.

Before Operation

Before Operation Safety

General Safety

- Have the property or work area marked for buried lines and other objects, and do not dig in marked areas; note the location of unmarked objects and structures, such as underground storage tanks, wells, and septic systems.
- Inspect the area where you will use the equipment.
  - Evaluate the terrain to determine what accessories and attachments you need to properly and safely perform the job.
  - Remove all debris.
  - Ensure that the area is clear of bystanders before operating the machine.
  - Stop the machine if anyone enters the area.
- Become familiar with the safe operation of the equipment, operator controls, and safety decals.
  - The owner is responsible for training all operators and mechanics.
  - Never allow children or untrained people to operate or service the machine. Local regulations may restrict the age or require certified training of the operator.
  - Know how to stop the machine and shut off the engine quickly.
  - Check that the operator's presence controls, safety switches, and shields are attached and functioning properly. Do not operate the machine unless they are functioning properly.
  - Locate the pinch-point areas marked on the machine and attachments; keep your hands and feet away from these areas.
  - Stop the machine, shut off the engine, and remove the key before leaving the operating position.

Fuel Safety

- Use extra care when handling fuel. It is flammable and its vapors are explosive.
- Extinguish all cigarettes, cigars, pipes, and other sources of ignition.
- Use only an approved fuel container.
- Do not remove the fuel cap or fill the fuel tank while the engine is running or hot.
- Do not add or drain fuel in an enclosed space.
- Do not store the machine or fuel container where there is an open flame, spark, or pilot light, such as on a water heater or other appliance.
- If you spill fuel, do not attempt to start the engine; avoid creating any source of ignition until the fuel vapors have dissipated.
- Do not fill containers inside a vehicle or on a truck or trailer bed with a plastic liner. Always place containers on the ground, away from your vehicle before filling.
- Remove the equipment from the truck or trailer and refuel it while it is on the ground. If this is not possible, then refuel from a portable container rather than a fuel-dispenser nozzle.
- Keep the fuel-dispenser nozzle in contact with the rim of the fuel tank or container opening at all times until fueling is complete. Do not use a nozzle lock-open device.

Adding Fuel

Recommended Fuel

- For best results, use only clean, fresh (less than 30 days old), unleaded gasoline with an octane rating of 87 or higher ((R+M)/2 rating method).
- **Ethanol**: Gasoline with up to 10% ethanol (gasohol) or 15% MTBE (methyl tertiary butyl ether) by volume is acceptable. Ethanol and MTBE are not the same. Gasoline with 15% ethanol (E15) by volume is not approved for use. **Never use gasoline that contains more than 10% ethanol by volume**, such as E15 (contains 15% ethanol), E20 (contains 20% ethanol), or E85 (contains up to 85% ethanol). Using unapproved gasoline may cause performance problems and/or engine damage which may not be covered under warranty.
- **Do not** use gasoline containing methanol.
- **Do not** store fuel either in the fuel tank or fuel containers over the winter unless you use a fuel stabilizer.
- **Do not** add oil to gasoline.

Using Stabilizer/Conditioner

Use fuel stabilizer/conditioner in the machine to keep the fuel fresh longer when used as directed by the fuel-stabilizer manufacturer.

Important: **Do not use fuel additives containing methanol or ethanol.**

Add the amount of fuel stabilizer/conditioner to fresh fuel as directed by the fuel-stabilizer manufacturer.

Filling the Fuel Tank

1. Park the machine on a level surface, engage the parking brake (if equipped), and lower the boom.
2. Shut off the engine, remove the key, and allow the engine to cool.
3. Clean around the fuel-tank cap and remove it (Figure 18).

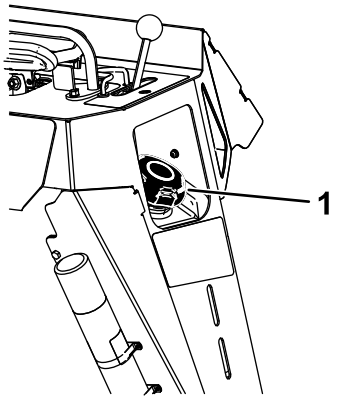

g247445

Figure 18

1. Fuel-tank cap

4. Add fuel to the tank until the level is 6 to 13 mm (1/4 to 1/2 inch) below the bottom of the filler neck.

   Important: **This space in the tank allows fuel to expand. Do not fill the fuel tank completely full.**
5. Install the fuel-tank cap securely, turning it until it clicks.
6. Wipe up any spilled fuel.

Performing Daily Maintenance

Before starting the machine each day, perform the Each Use/Daily procedures listed in Maintenance (page 23).

During Operation

During Operation Safety

General Safety

- Keep your hands and feet away from moving teeth, chain, auger, or other parts.
  - Keep bystanders and pets away from the machine and never carry passengers.
  - Wear appropriate clothing including eye protection, long pants, substantial slip-resistant footwear, and hearing protection.
  - Tie back long hair and do not wear loose clothing or loose jewelry.
  - Stop digging if anyone enters the area.
- The machine moves in reverse during operation—be aware of your surroundings while using the machine.
  - Operate the machine only in areas where there is sufficient clearance for you to safely maneuver.
  - Be aware of obstacles in close proximity to you. Failure to maintain adequate distance from trees, walls, and other barriers may result in injury as the machine backs up during operation if you are not attentive to the surroundings.
  - Look behind and down before backing up to ensure that the path is clear.
- Use your full attention while operating the machine. Do not engage in any activity that causes distractions; otherwise, injury or property damage may occur.
- Never jerk the controls; use a steady motion.
- The owner/user can prevent and is responsible for accidents that may cause personal injury or property damage.
- Do not operate the machine when you are tired, ill, or under the influence of alcohol or drugs.
- Operate the machine only in good light.
- Ensure that all the drives are in neutral and engage the parking brake before starting the engine. Start the engine only from the operator's position.
- Use care when approaching blind corners, shrubs, trees, or other objects that may obscure vision.
- Stop the digging chain when you are not digging.
- Stop the machine, shut off the engine, remove the key, and inspect the machine if you strike an object. Make any necessary repairs before resuming operation.
- Never run an engine in an enclosed area.
- Never leave a running machine unattended. Before leaving the operating position, do the following:
  - Park the machine on a level surface.
  - Lower the boom to the ground
  - Engage the parking brake.
  - Shut off the engine and remove the key.
- Check for overhead clearance (i.e., electrical wires, branches, and doorways) before driving under any objects and do not contact them.
- Do not operate the machine when there is the risk of lightning.
- Use only Toro-approved attachments and accessories.

Slope Operation

- Operate up and down slopes with the front of the machine uphill.
- Raising the boom on a slope affects the stability of the machine. Keep the boom in the lowered position when on slopes.
- Slopes are a major factor related to loss-of-control and tip-over accidents, which can result in severe injury or death. operating the machine on any slope requires extra caution.
- Establish your own procedures and rules for operating on slopes. These procedures must include surveying the site to determine which slopes are safe for machine operation. Always use common sense and good judgment when performing this survey.
- Slow down and use extra care on hillsides. Ground conditions can affect the stability of the machine.
- Avoid starting or stopping the machine on a slope.
- Avoid turning on slopes. If you must turn, turn slowly and keep the heavy end of the machine uphill.
- Keep all movements on slopes slow and gradual. Do not make sudden changes in speed or direction.
- If you feel uneasy operating the machine on a slope, do not do it.
- Watch for holes, ruts, or bumps, as uneven terrain could overturn the machine. Tall grass can hide obstacles.
- Use caution when operating on wet surfaces. Reduced traction could cause sliding.
- Evaluate the area to ensure that the ground is stable enough to support the machine.
- Use caution when operating the machine near the following:
  - Drop-offs
  - Ditches

– Embankments
– Bodies of water

The machine could suddenly roll over if a track goes over the edge or the edge caves in. Maintain a safe distance between the machine and any hazard.

- If the machine starts to tip, let go of the controls and step away from the machine.
- Do not remove or add attachments on a slope.
- Do not park the machine on a hillside or slope.

Starting the Engine

1. Move the throttle lever midway between the SLOW and FAST positions (Figure 19).

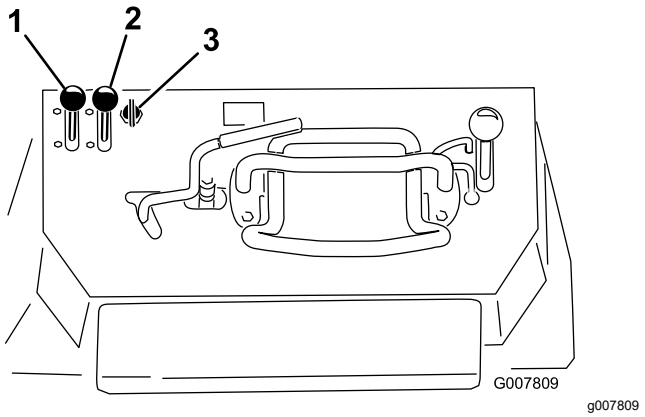

g007809

Figure 19

1. Throttle lever
2. Choke lever
3. Key

2. Move the choke lever to the ON position (Figure 19).

   Note: A warm or hot engine may not require choking.

3. Start the engine as follows for your machine:
   - For recoil-start machines, turn the key to the ON position, then pull the recoil handle on top of the engine.
   - For electric-start machines, turn the key to the ON position (Figure 19). When the engine starts, release the key.

     Important: **Do not engage the starter for more than 10 seconds at a time. If the engine fails to start, allow a 30-second cooldown period between attempts. Failure to follow these instructions can burn out the starter motor.**

4. Gradually move the choke lever to the OFF position (Figure 19). If the engine stalls or hesitates, engage the choke again until the engine warms up.
5. Move the throttle lever to the desired setting (Figure 19).

   Important: **Running the engine at high speeds when the hydraulic system is cold (i.e., when the air temperature is at or below freezing) could damage the hydraulic system. When starting the engine in cold conditions, allow it to run in the middle throttle position for 2 to 5 minutes before moving the throttle to the FAST position.**

   Note: If the outdoor temperature is below freezing, store the machine in a garage to keep it warmer and aid in starting.

Driving the Machine

Use the traction controls to move the machine. The farther you move the traction controls in any direction, the faster the machine moves in that direction. Release the traction controls to stop the machine.

⚠ CAUTION

When reversing, you may back into stationary objects or over bystanders and cause serious personal injury or death.

Look behind you for obstructions or bystanders and keep your hands on the reference bar.

The throttle control regulates the engine speed as measured in rpm (revolutions per minute). Place the throttle lever in the FAST position for best performance. You can, however, use the throttle position to operate at slower speeds.

Shutting off the Engine

1. Park the machine on a level surface, engage the parking brake (if applicable), and lower the boom.
2. Move the throttle lever to the SLOW position (Figure 19).
3. If the engine has been working hard or is hot, let it idle for a minute before turning the key switch to the OFF position.

   Note: This helps to cool the engine before you shut it off. In an emergency, you can shut off the engine immediately.

4. Turn the key switch to the OFF position and remove the key.

⚠ CAUTION

A child or untrained bystander could attempt to operate the machine and be injured.

Remove the key from the switch when leaving the machine, even if just for a few seconds.

Digging a Trench

1. Start the engine, raise the boom, move the throttle lever to the FAST position, and move the machine over the area to be trenched.
2. Pull the trencher control lever to the reference bar to engage the trencher.
3. Slowly lower the boom and chain into the ground.

   Note: To achieve the maximum depth, you may need to lower the boom as far into the ground as it can go with the chain running. Then, stop the chain and lower it fully. Start the chain again and resume operation.
4. Once the trencher boom is in the ground at a 45° to 60° angle, slowly move the machine rearward to extend the trench.

   Note: If you move too fast, the trencher will stall. If it stalls, raise it slightly, slowly drive forward, or reverse the chain direction momentarily.
5. When finished, raise the boom out of the trench, then stop the trencher.

Operating Tips

- Clean the area of trash, branches, and rocks before trenching to prevent damaging the machine.
- Always begin trenching with the slowest ground speed possible. Increase speed if conditions permit. If the chain speed slows down, reduce the ground speed to keep the chain moving at its fastest rate. Do not spin the tracks while trenching.
- Always use full throttle (maximum engine speed) when trenching.
- Always trench backward (i.e., in reverse).
- Trench with the chain at a 45° to 60° angle for best results.
- You will be able to dig a trench faster by controlling the depth with periodic adjustments of the boom.
- If the trencher binds in the soil, reverse the chain direction. Once the chain is loose, change chain directions and continue trenching.
- If you need the finished trench to be cleaner than what is possible with the trencher, you can purchase a crumber from your dealer. The crumber mounts onto the trencher head and scrapes the trench clean as you dig.
- To improve the quality of trenches less than 61 cm (24 inches) deep, use a 61 cm (24 inch) boom.
- If the lift speed of the machine is too slow or too fast, adjust the bolt indicated in Figure 20.

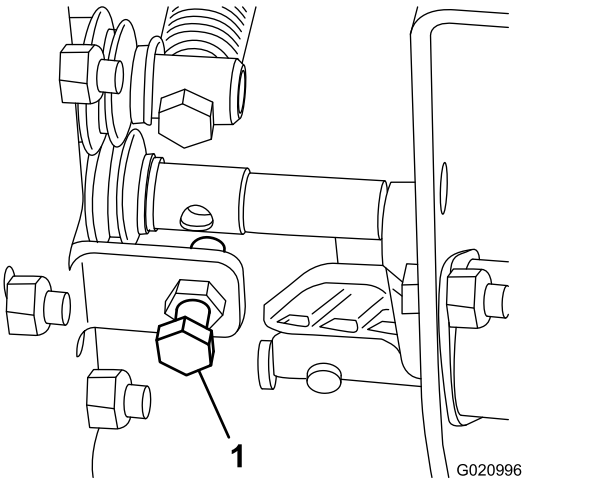

g020996

Figure 20

1. Lift-speed adjustment bolt

- Use the correct chain for the ground conditions, as listed in the following table:

Soil Type	Recommended Chain Type
Sandy	Soil chain (configure with extra teeth for a faster digging speed; refer to your Authorized Service Dealer)
Sandy Loam/Loam/Loamy Clay	Soil chain
Wet, sticky clay	Soil chain
Hard soils: dry clay and compacted soils	Combination chain
Rocky soil/gravel	Rock chain

After Operation

After Operation Safety

- Park the machine on a level surface, disengage the trencher hydraulics, lower the boom, engage the parking brake, shut off the engine, and remove the key. Wait for all movement to stop and allow the machine to cool before adjusting, servicing, cleaning, or storing it.
- Clean debris from the attachments, drives, mufflers, and engine to help prevent fires. Clean up oil or fuel spills.
- Keep all parts in good working condition and all hardware tightened.
- Use care when loading or unloading the machine into a trailer or truck.

Moving a Non-Functioning Machine

Important: **Do not tow or pull the machine without first opening the tow valves, or you will damage the hydraulic system.**

1. Engage the parking brake and lower the boom.
2. Shut off the engine and remove the key.
3. Remove the bottom shield.
4. Using a wrench, turn the tow valves on the hydraulic pumps twice counter-clockwise (Figure 21).

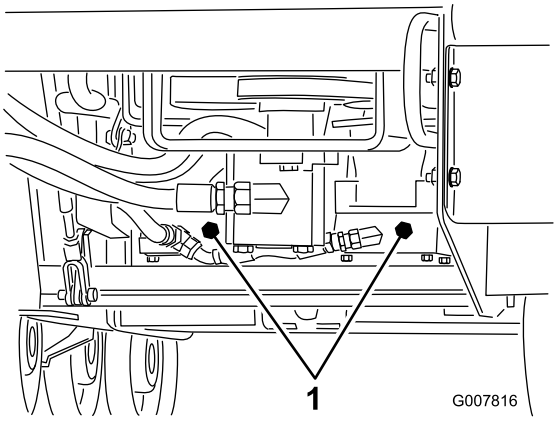

Figure 21

1. Tow valves

5. Install the bottom shield and tow the machine as required.
6. After repairing the machine, close the tow valves before operating it.

Securing the Machine for Transport

Important: **Do not operate or drive the machine on roadways. Use care when loading or unloading the machine into a trailer or truck.**

1. Park the machine on a level surface, engage the parking brake (if applicable), and lower the boom.
2. Shut off the engine and remove the key.
3. Secure the machine to a trailer with chains or straps using the tie-down/lift loops at the front and rear of the machine (Figure 22 and Figure 23). Refer to your local ordinances for trailer and tie-down requirements.

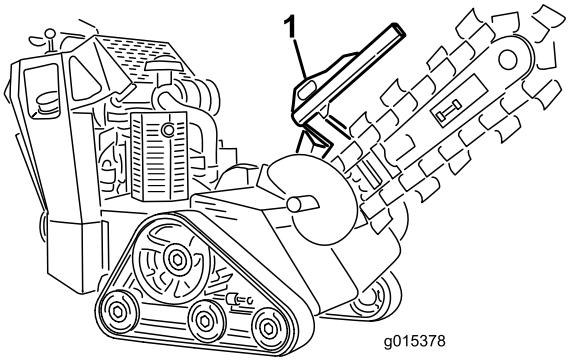

g015378

Figure 22

1. Front tie-down loop

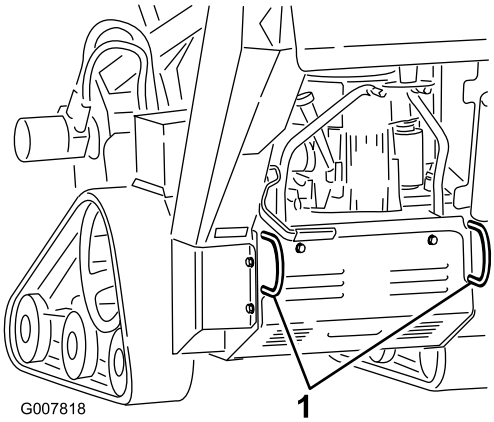

g007818

Figure 23

1. Rear tie-down loops

Lifting the Machine

You can lift the machine using the tie-down/lift loops as lift points (Figure 22 and Figure 23).

Maintenance

Note: Determine the left and right sides of the machine from the normal operating position.

⚠ CAUTION

If you leave the key in the key switch, someone could accidently start the engine and seriously injure you or other bystanders.

Remove the key from the key switch and disconnect the wires from the spark plugs before you do any maintenance. Set the wires aside so that they do not accidentally contact the spark plugs.

Maintenance Safety

- Park the machine on a level surface, disengage the trencher hydraulics, lower the boom, engage the parking brake, shut off the engine, and remove the key. Wait for all movement to stop and allow the machine to cool before adjusting, cleaning, storing, or repairing it.
- Clean up oil or fuel spills.
- Do not allow untrained personnel to service the machine.
- Use jack stands to support the components when required.
- Carefully release pressure from components with stored energy.
- Disconnect the battery before making any repairs.
- Keep your hands and feet away from the moving parts. If possible, do not make adjustments with the engine running.
- Keep all parts in good working condition and all hardware tightened. Replace all worn or damaged decals.
- Do not tamper with the safety devices.
- Use only genuine Toro replacement parts.

Recommended Maintenance Schedule(s)

Maintenance Service Interval	Maintenance Procedure
After the first 8 hours	• Change the engine oil.
After the first 50 hours	• Check and adjust the track tension.
Before each use or daily	• Grease the machine. (Grease immediately after every washing.) • Check the engine-oil level. • Check the condition of and clean the tracks. • Test the parking brake. • Check the condition of the digging teeth and replace any that are worn or damaged. • Check for loose fasteners.
After each use	• Remove debris from the machine.
Every 25 hours	• Clean the foam air-cleaner element (more often in dirty or dusty conditions)—Models 22972 and 22973 only. • Check the battery electrolyte level. • Check the hydraulic-fluid level. • Check the digging chain for excessive wear and proper tension.
Every 40 hours	• Grease the trencher housing.
Every 100 hours	• Check the paper air-cleaner element (more often in dirty or dusty conditions)—Models 22972 and 22973 only. • Change the engine oil. • Replace or clean and gap the spark plug(s). • Check and adjust the track tension. • Check the hydraulic lines for leaks, loose fittings, kinked lines, loose mounting supports, wear, weather, and chemical deterioration and repair if necessary.

Maintenance Service Interval	Maintenance Procedure
Every 200 hours	• Replace the paper air-cleaner element (more often in dirty or dusty conditions)—Models 22972 and 22973 only. • Change the engine-oil filter. • Replace the fuel filter. • Replace the hydraulic filter.
Every 250 hours	• Replace the primary air filter and check the condition of the safety filter (more often in dirty or dusty conditions)—Model 22974 only. • Check and grease the road wheels.
Every 400 hours	• Change the hydraulic fluid.
Every 500 hours	• Replace the secondary air filter. (more often in dirty or dusty conditions)—Model 22974 only.
Every 1,500 hours	• Replace all moving hydraulic hoses.
Yearly or before storage	• Check and adjust the track tension. • Check and adjust the chain tension. • Touch up chipped paint

Important: **Refer to your engine owner's manual for additional maintenance procedures.**

Pre-Maintenance Procedures

Removing the Cover Plate

Note: The fasteners on the covers of this machine are designed to remain on the cover after removal. Loosen all fasteners on each cover a few turns so that the cover is loose but still attached, then go back and loosen them until the cover comes free. This prevents you from accidentally stripping the bolts free of the retainers.

1. Park the machine on a level surface, engage the parking brake (if applicable), and lower the boom.
2. Shut off the engine and remove the key.

⚠ WARNING

There is a rotating shaft under the cover that is moving when the machine is running and can catch fingers, hands, loose hair, and clothing, causing serious injury, amputation, or death.

Always shut off the engine and wait for all moving parts to stop before removing the cover.

3. Loosen the bolt at the rear of the cover plate.
4. Loosen the 3 bolts securing the cover plate to the frame sequentially until the cover is loose (Figure 24).

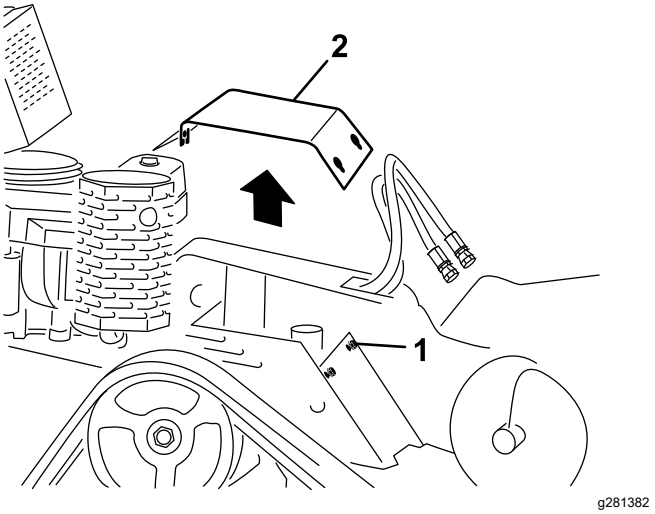

Figure 24

1. Bolt (3)
2. Cover plate

5. Slide the cover plate toward the right side of the machine, then pull it off over the bolts and off the machine.
6. To install the cover plate before operating the machine, slide the plate into place and secure it with the 3 bolts you loosened previously (Figure 24).

Removing the Bottom Shield

Note: The fasteners on the covers of this machine are designed to remain on the cover after removal. Loosen all fasteners on each cover a few turns so that the cover is loose but still attached, then go back and loosen them until the cover comes free. This prevents you from accidentally stripping the bolts free of the retainers.

1. Park the machine on a level surface, engage the parking brake (if applicable), and lower the boom.
2. Shut off the engine and remove the key.
3. Loosen the 2 bolts securing the bottom shield sequentially until the shield is free (Figure 25).

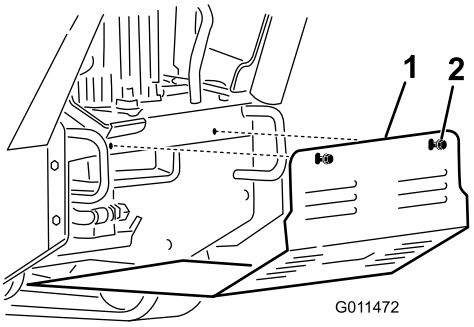

g011472

Figure 25

1. Bottom shield
2. Bolts

4. Pull the shield back and out of the machine.
5. To install the shield before operating the machine, slide the bottom shield into the machine so that it rests on all 4 tabs and secure it with the 2 bolts you loosened previously (Figure 25).

   Note: You may need to lift up on the bottom shield to ensure that it rests on the front tabs.

Lubrication

Greasing the Machine

Service Interval: Before each use or daily (Grease immediately after every washing.)

Grease Type: General-purpose grease.

1. Park the machine on a level surface, engage the parking brake, and lower the boom.
2. Shut off the engine and remove the key.
3. Clean the grease fittings with a rag.
4. Connect a grease gun to each fitting (Figure 26 through Figure 29).
5. Pump grease into the fittings until grease begins to ooze out of the bearings (approximately 3 pumps).
6. Wipe up any excess grease.

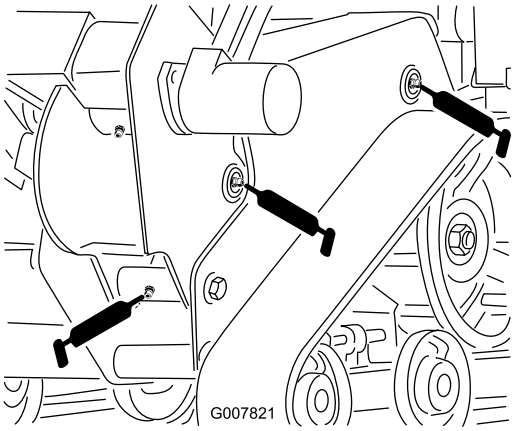

g007821

Figure 26

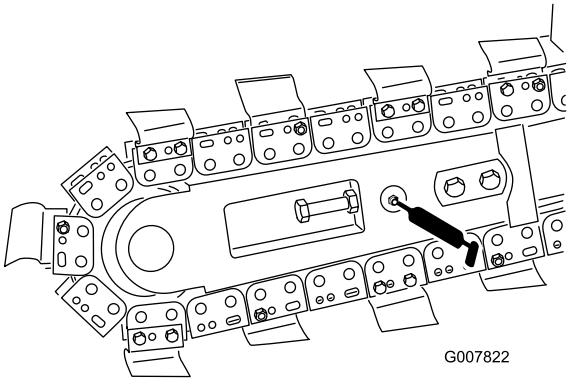

g007822

Figure 27

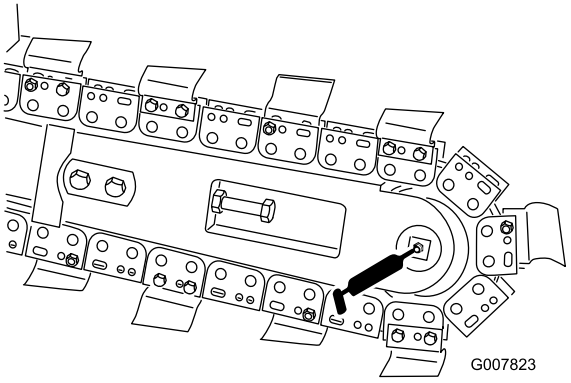

g007823

Figure 28

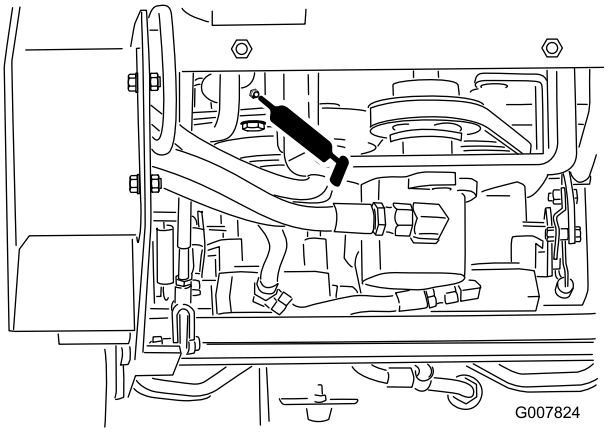

g007824

Figure 29

Greasing the Trencher Housing

Service Interval: Every 40 hours

Grease Type: General-purpose grease.

1. Park the machine on a level surface, engage the parking brake, and lower the boom.
2. Shut off the engine and remove the key.
3. Clean the trencher housing grease fitting with a rag and connect a grease gun to it (Figure 30).

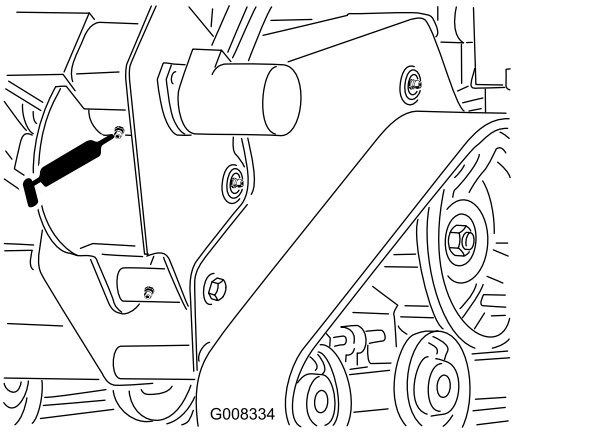

g008334

Figure 30

4. Pump grease into the fitting until grease comes out of the grease valve located next to the fitting.
5. Wipe up any excess grease.

Engine Maintenance

Engine Safety

- Shut off the engine before checking the oil or adding oil to the crankcase.
- Do not change the engine governor setting or overspeed the engine.
- Keep your hands, feet, face, clothing, and other body parts away from the muffler and other hot surfaces.

Servicing the Air Cleaner

Models 22972 and 22973

Service Interval: Every 25 hours—Clean the foam air-cleaner element (more often in dirty or dusty conditions)—Models 22972 and 22973 only.

Every 100 hours—Check the paper air-cleaner element (more often in dirty or dusty conditions)—Models 22972 and 22973 only.

Every 200 hours/Yearly (whichever comes first)—Replace the paper air-cleaner element (more often in dirty or dusty conditions)—Models 22972 and 22973 only.

Inspect the foam and paper elements and replace them if they are damaged or excessively dirty.

Important: **Do not oil the foam or paper element.**

Removing the Foam and Paper Elements

1. Park the machine on a level surface, engage the parking brake, and lower the boom.
2. Shut off the engine and remove the key.
3. Clean around the air cleaner to prevent dirt from getting into the engine and causing damage (Figure 31).
4. Loosen the cover knobs and remove the air-cleaner cover (Figure 31).
5. Loosen the hose clamp and remove the air-cleaner assembly (Figure 31).
6. Carefully pull the foam element off the paper element (Figure 31).

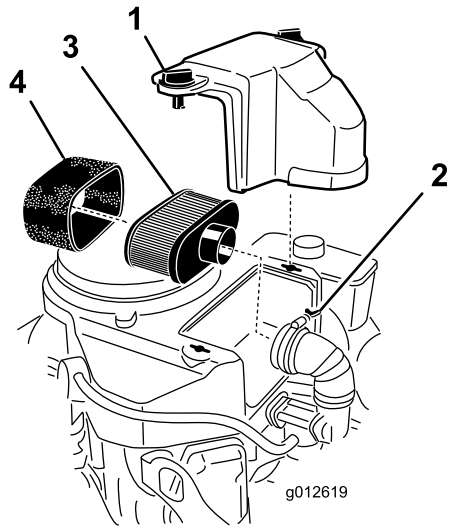

g012619

Figure 31

1. Cover
2. Hose clamp
3. Paper element
4. Foam element

Cleaning the Foam Air-Cleaner Element

1. Wash the foam element in liquid soap and warm water. When the element is clean, rinse it thoroughly.
2. Dry the element by squeezing it in a clean cloth.

   Important: **Replace the foam element if it is torn or worn.**

Servicing the Paper Air-Cleaner Element

1. Clean the paper element by tapping it gently to remove dust. If it is very dirty, replace the paper element (Figure 31).
2. Inspect the element for tears, an oily film, or damage to the rubber seal.
3. Replace the paper element if it is damaged.

   Important: **Do not clean the paper filter.**

Installing the Foam and Paper Air-Cleaner Elements

Important: **To prevent engine damage, always operate the engine with the complete foam and paper air-cleaner assembly installed.**

1. Carefully slide the foam element onto the paper element (Figure 31).
2. Place the air-cleaner assembly onto the air-cleaner base or hose and secure it (Figure 31).
3. Place the air-cleaner cover into position and tighten the cover knobs (Figure 31).

Model 22974

Service Interval: Every 250 hours—Replace the primary air filter and check the condition of the safety filter (more often in dirty or dusty conditions)—Model 22974 only.

Every 500 hours—Replace the secondary air filter. (more often in dirty or dusty conditions)—Model 22974 only.

Removing the Filters

1. Park the machine on a level surface, engage the parking brake (if applicable), and lower the boom.
2. Shut off the engine and remove the key.
3. Release the latches on the air cleaner and pull the air-cleaner cover off the air-cleaner body (Figure 32).

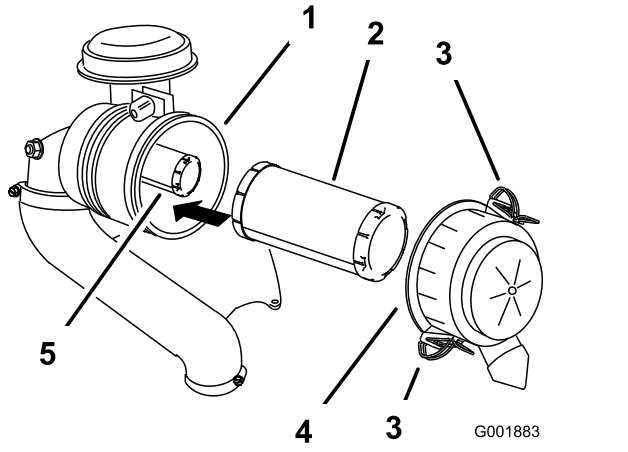

Figure 32

1. Air-cleaner body
2. Primary filter
3. Latch
4. Air-cleaner cover
5. Safety filter

4. Clean the inside of the air-cleaner cover with compressed air.
5. Gently slide the primary filter out of the air-cleaner body (Figure 32).

   Note: Avoid knocking the filter into the side of the body.
6. Remove the safety filter only if you intend to replace it.

   Important: **Do not attempt to clean the safety filter. If the safety filter is dirty, then the primary filter is damaged. Replace both filters.**

Servicing the Primary Filter

Inspect the primary filter for damage by looking into the filter while shining a bright light on the outside of the filter.

Note: Holes in the filter appear as bright spots. If the filter is dirty, bent, or damaged, replace it. Do not clean the primary filter.

Servicing the Safety Filter

Replace the safety filter; never clean it.

Important: **Do not attempt to clean the safety filter. If the safety filter is dirty, then the primary filter is damaged. Replace both filters.**

Installing the Filters

Important: **To prevent engine damage, always operate the engine with both air filters and the cover installed.**

1. If you are installing new filters, check each filter for shipping damage.

   Note: Do not use a damaged filter.
2. If you are replacing the safety filter, carefully slide it into the filter body (Figure 32).
3. Carefully slide the primary filter over the safety filter (Figure 32).

   Note: Ensure that the primary filter is fully seated by pushing on its outer rim while installing it.

   Important: **Do not press on the soft inside area of the filter.**
4. Install the air-cleaner cover with the side indicated as **up** facing upward and secure the latches (Figure 32).

Servicing the Engine Oil

Service Interval: After the first 8 hours—Change the engine oil.

Before each use or daily—Check the engine-oil level.

Every 100 hours—Change the engine oil.

Every 200 hours—Change the engine-oil filter.

Note: Change the oil more frequently when the operating conditions are extremely dusty or sandy.

Note: Your engine may look different than the one shown in the graphics.

Engine-Oil Specifications

Oil Type: Detergent oil (API service SF, SG, SH, or SJ)

Crankcase Capacity:

- Models 22972 and 22973: 1.7 L (57 fl oz) with the filter removed; 1.5 L (51 fl oz) without the filter removed
- Models 22974: 2.1 L (71 fl oz) with the filter removed; 1.8 L (61 fl oz) without the filter removed

Viscosity: Refer to the table below.

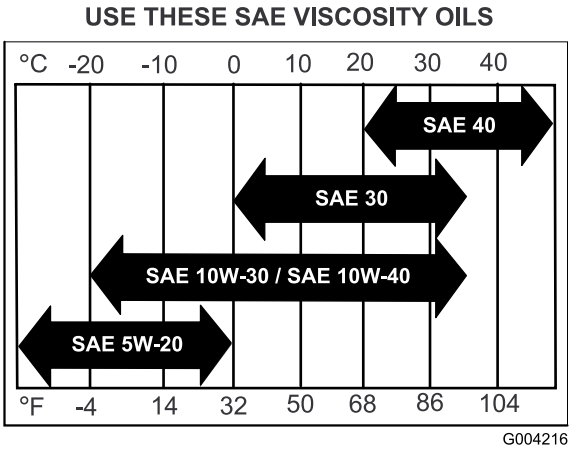

g004216

Figure 33

Checking the Engine-Oil Level

1. Park the machine on a level surface, engage the parking brake (if applicable), and lower the boom.
2. Shut off the engine and remove the key.

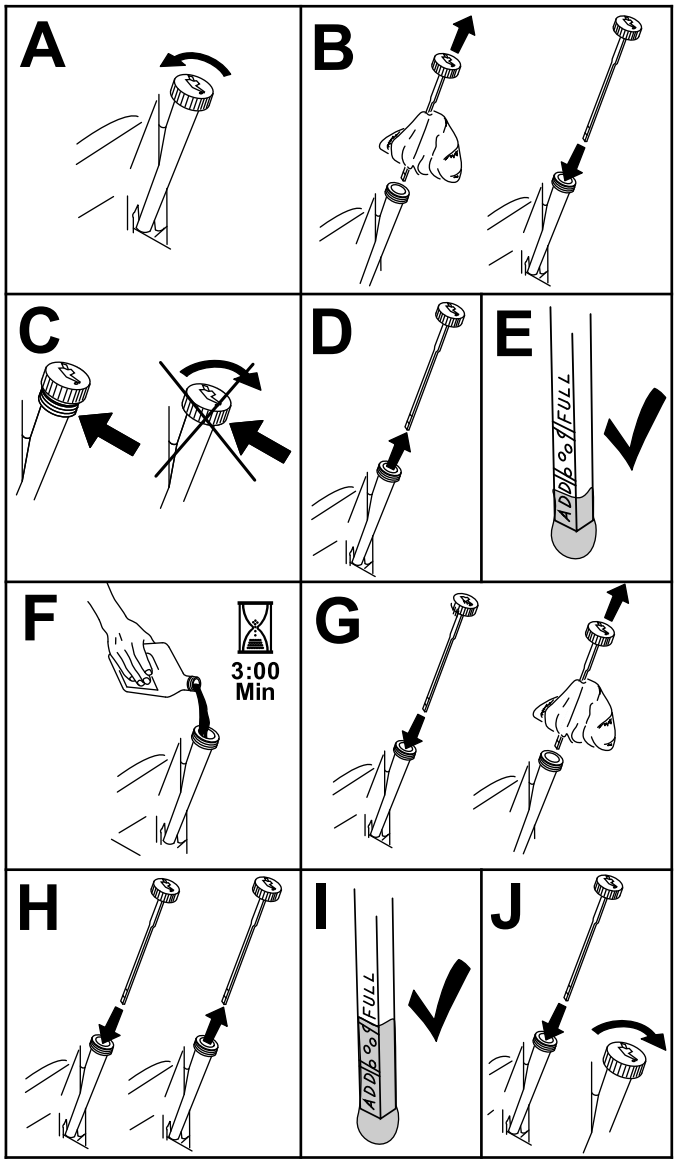

g194611

Figure 34

Changing the Engine Oil

1. Start the engine and let it run 5 minutes. This warms the oil so it drains better.
2. Park the machine so that the drain side is slightly lower than the opposite side to ensure that the oil drains completely.
3. Lower the boom and engage the parking brake.
4. Shut off the engine, remove the key, and wait for all moving parts to stop before leaving the operating position.
5. Place a pan below the drain hose.

   Note: Rotate the oil-drain valve to allow oil to drain (Figure 35).

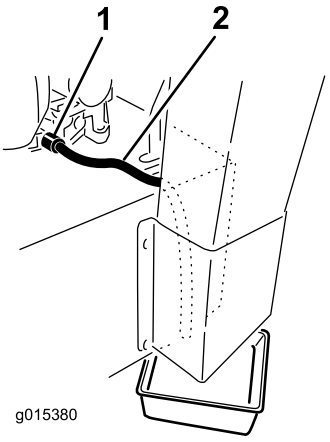

g015380

Figure 35

1. Oil-drain valve
2. Oil-drain hose

6. When oil has drained completely, close the drain valve.
7. Dispose of the used oil at a recycling center
8. Slowly pour approximately 80% of the specified oil into the filler tube and slowly add the additional oil to bring it to the **Full** mark (Figure 36).

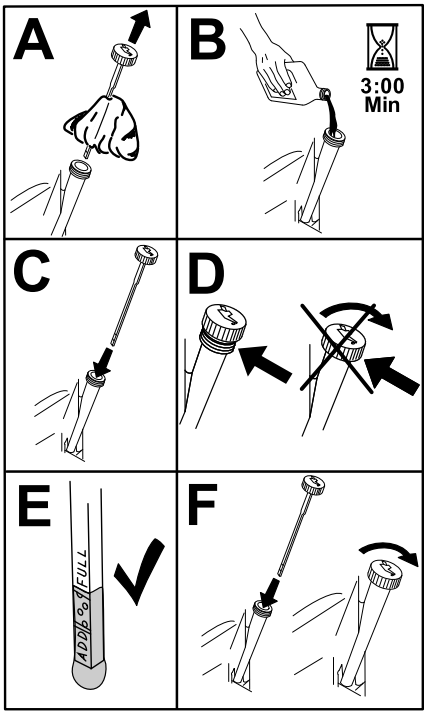

g194610

Figure 36

9. Start the engine and drive to a flat area.
10. Check the oil level again.

Changing the Engine-Oil Filter

1. Drain the oil from the engine; refer to Changing the Engine Oil (page 30).
2. Change the engine-oil filter (Figure 37).

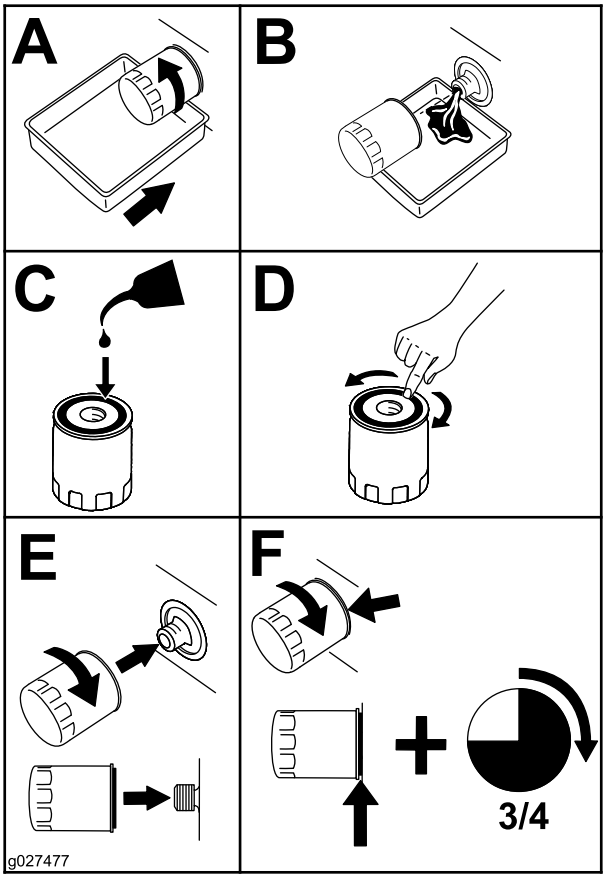

g027477

Figure 37

Note: Ensure that the oil-filter gasket touches the engine, and then turn the oil filter an extra 3/4 turn.

3. Fill the crankcase with the proper type of new oil; refer to Engine-Oil Specifications (page 29).

Servicing the Spark Plug(s)

Service Interval: Every 100 hours

Make sure that the air gap between the center and side electrodes is correct before installing the spark plug(s). Use a spark plug wrench for removing and installing the spark plug(s) and a gapping tool/feeler gauge to check and adjust the air gap. Install a new spark plug(s) if necessary.

Type of Spark Plug: NGK® BPR4ES or equivalent

Air Gap: 0.75 mm (0.03 inch)

Removing the Spark Plug(s)

1. Park the machine on a level surface, engage the parking brake (if applicable), and lower the boom.
2. Shut off the engine and remove the key.
3. Locate and remove the spark plug(s) as shown in Figure 38.

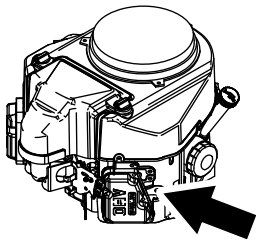

g247491

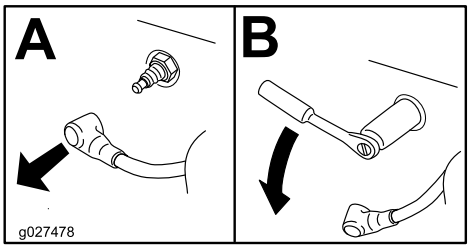

g027478

Figure 38

Checking the Spark Plug(s)

Important: **Do not clean the spark plug(s). Always replace the spark plug(s) when it has: a black coating, worn electrodes, an oily film, or cracks.**

If you see light brown or gray on the insulator, the engine is operating properly. A black coating on the insulator usually means the air cleaner is dirty.

Set the gap to 0.75 mm (0.03 inch).

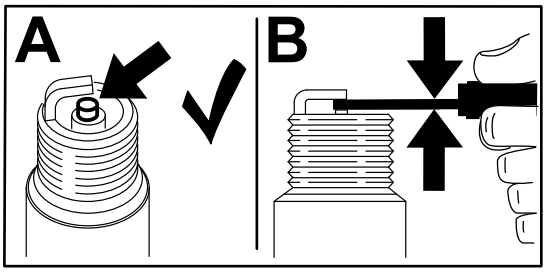

g206628

Figure 39

Installing the Spark Plug(s)

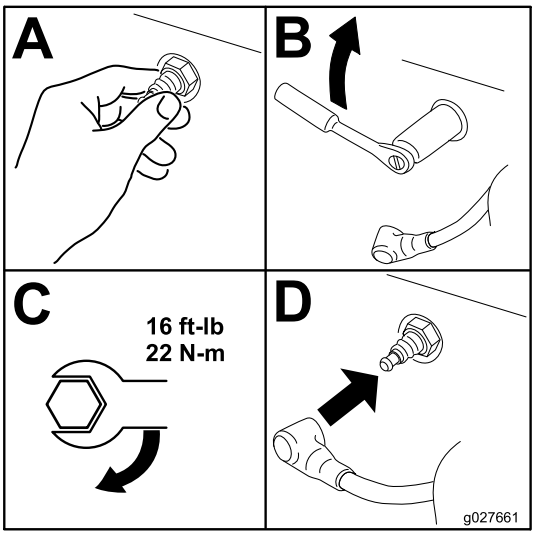

g027661

Figure 40

Fuel System Maintenance

⚠ DANGER

In certain conditions, fuel is extremely flammable and highly explosive. A fire or explosion from fuel can burn you and others and can damage property.

Refer to Fuel Safety (page 17) for a complete list of fuel related precautions.

Draining the Fuel Tank

1. Park the machine on a level surface, engage the parking brake, and lower the boom.
2. Shut off the engine and remove the key.
3. Turn the fuel-shutoff valve to the closed position (Figure 41).

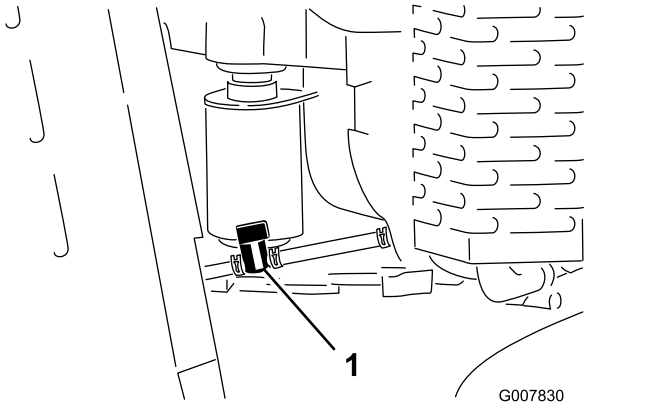

g007830

Figure 41

1. Fuel-shutoff valve

4. Squeeze the ends of the hose clamp on the engine side of the valve together and slide it up the fuel line away from the valve (Figure 41).
5. Pull the fuel line off the valve (Figure 41).
6. Open the fuel-shutoff valve and allow the fuel to drain into a fuel can or drain pan.

   Note: If desired, you can replace the fuel filter at this time; refer to Replacing the Fuel Filter (page 33).
7. Install the fuel line onto the fuel-shutoff valve. Slide the hose clamp close to the valve to secure the fuel line.
8. Wipe up any spilled fuel.

Replacing the Fuel Filter

Service Interval: Every 200 hours

Never install a dirty filter if it is removed from the fuel line.

Note: Note how the fuel filter is installed in order to install the new filter correctly.

Note: Wipe up any spilled fuel.

1. Park the machine on a level surface, engage the parking brake, and lower the boom.
2. Shut off the engine and remove the key.
3. Turn the fuel shutoff valve to the closed position (Figure 41).
4. Squeeze the ends of the hose clamps together and slide them away from the filter (Figure 42).

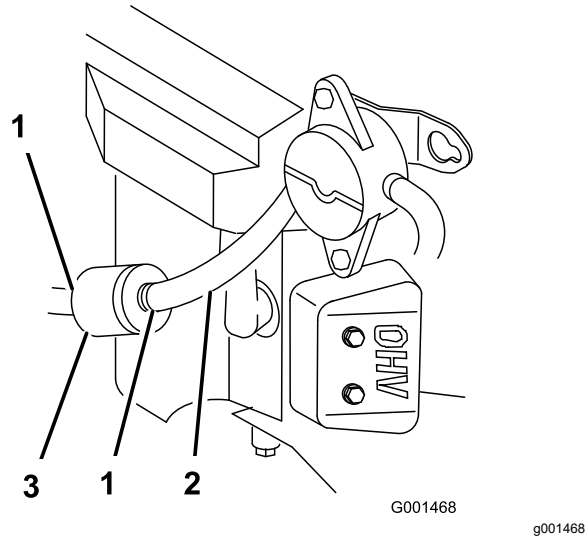

Figure 42

1. Hose clamp
2. Fuel line
3. Filter

5. Remove the filter from the fuel lines.
6. Install a new filter and move the hose clamps close to the filter.
7. Turn the fuel shutoff valve to the open position (Figure 41).
8. Check for fuel leaks and repair if needed.
9. Wipe up any spilled fuel.

Electrical System Maintenance

Electrical System Safety

- Disconnect the battery before repairing the machine. Disconnect the negative terminal first and the positive last. Connect the positive terminal first and the negative last.
- Charge the battery in an open, well-ventilated area, away from sparks and flames. Unplug the charger before connecting or disconnecting the battery. Wear protective clothing and use insulated tools.
- Battery acid is poisonous and can cause burns. Avoid contact with skin, eyes, and clothing. Protect your face, eyes, and clothing when working with a battery.
- Battery gases can explode. Keep cigarettes, sparks, and flames away from the battery.

Servicing the Battery

Electric-Start Machines Only

Service Interval: Every 25 hours—Check the battery electrolyte level.

Always keep the battery clean and fully charged. Use a paper towel to clean the battery case. If the battery terminals are corroded, clean them with a solution of 4 parts water and 1 part baking soda. Apply a light coating of grease to the battery terminals to reduce corrosion.

Voltage: 12 V with 300 A (cold cranking) at -18°C (0°F).

⚠ WARNING

Battery terminals or metal tools could short against metal machine components, causing sparks. Sparks can cause the battery gasses to explode, resulting in personal injury.

- **When removing or installing the battery, do not allow the battery terminals to touch any metal parts of the machine.**
- **Do not allow metal tools to short between the battery terminals and metal parts of the machine.**

Removing the Battery

1. Park the machine on a level surface, engage the parking brake, and lower the boom.
2. Shut off the engine and remove the key.

3. Lift the black rubber cover on the negative cable. Disconnect the negative battery cable from the negative (-) battery terminal (Figure 43).

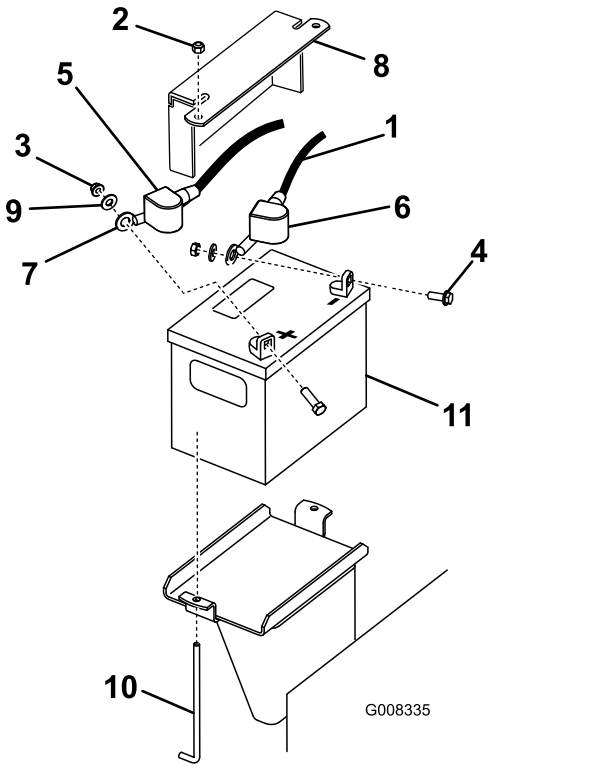

Figure 43

1. Negative cable
2. Nut (1/4 inch)
3. Nut (5/16 inch)
4. Bolt
5. Rubber cover (red)
6. Rubber cover (black)
7. Positive cable
8. Battery hold down plate
9. Washer
10. J-bolt
11. Battery

4. Slide the red terminal boot off the positive (red) battery terminal. Then remove the positive (red) battery cable (Figure 43).
5. Remove the hold-down plate, J-bolts, and locknuts securing the battery (Figure 43). Remove the battery.

Charging the Battery

⚠ WARNING

Charging the battery produces gasses that can explode.

Never smoke near the battery and keep sparks and flames away from battery.

Important: **Always keep the battery fully charged (1.265 specific gravity). This is especially important to prevent battery damage when the temperature is below 0°C (32°F).**

1. Remove the battery from the machine; refer to Removing the Battery (page 33).
2. Charge the battery at a rate of 3 to 4 A for 4 to 8 hours (Figure 44). Do not overcharge the battery.

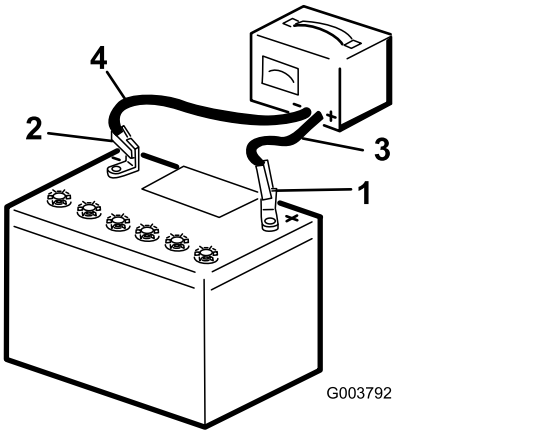

Figure 44

1. Positive battery post
2. Negative battery post
3. Red (+) charger lead
4. Black (-) charger lead

3. When the battery is fully charged, unplug the charger from the electrical outlet, then disconnect the charger leads from the battery posts (Figure 44).

Checking the Battery Electrolyte Level

⚠ DANGER

Battery electrolyte contains sulfuric acid which is fatal if consumed and causes severe burns.

- **Do not drink electrolyte and avoid contact with skin, eyes or clothing. Wear safety glasses to shield your eyes and rubber gloves to protect your hands.**
- **Fill the battery where clean water is always available for flushing the skin.**

1. Park the machine on a level surface, engage the parking brake, and lower the boom.
2. Shut off the engine and remove the key.
3. Look at the side of the battery. The electrolyte must be up to the **upper** line (Figure 45). Do not allow the electrolyte to fall below the Lower line (Figure 45).

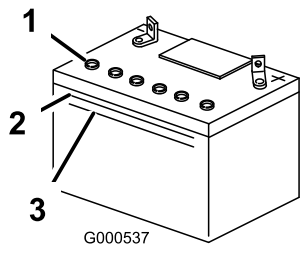

g000537

Figure 45

1. Vent caps
2. Upper line
3. Lower line

4. If the electrolyte is low, add the required amount of distilled water; refer to Adding Water to the Battery (page 35).

Adding Water to the Battery

The best time to add distilled water to the battery is just before you operate the machine. This lets the water mix thoroughly with the electrolyte solution.

1. Park the machine on a level surface, engage the parking brake, and lower the boom.
2. Shut off the engine and remove the key.
3. Remove the battery from the machine; refer to Removing the Battery (page 33).

   Important: **Never fill the battery with distilled water while the battery is installed in the machine. Electrolyte could spill on other parts and cause corrosion.**
4. Clean the top of the battery with a paper towel.
5. Remove the vent caps from the battery (Figure 45).
6. Slowly pour distilled water into each battery cell until the electrolyte level is up to the Upper line (Figure 45) on the battery case.

   Important: **Do not overfill the battery; electrolyte (sulfuric acid) can cause severe corrosion and damage to the chassis.**
7. Wait 5 to 10 minutes after filling the battery cells. Add distilled water, if necessary, until the electrolyte level is up to the Upper line (Figure 45) on the battery case.
8. Install the battery vent caps.

Cleaning the Battery

Note: Keep the terminals and the entire battery case clean, because a dirty battery discharges slowly.

1. Park the machine on a level surface, engage the parking brake, and lower the boom.
2. Shut off the engine and remove the key.
3. Remove the battery from the machine; Removing the Battery (page 33).
4. Wash the entire case with a solution of baking soda and water.
5. Rinse the battery with clear water.
6. Coat the battery posts and cable connectors with Grafo 112X (skin-over) grease (Toro Part No. 505-47) or petroleum jelly to prevent corrosion.
7. Install the battery; refer to Installing the Battery (page 35).

Installing the Battery

1. Using the fasteners previously removed, install the positive (red) battery cable to the positive (+) battery terminal (Figure 43).
2. Slide the red terminal boot onto the positive battery post.
3. Using the fasteners previously removed, install the negative (black) battery cable to the negative (-) battery terminal (Figure 43).
4. Secure the battery using the bar and wing nuts (Figure 43).

Important: **Ensure that the battery cables do not contact any sharp edges or each other.**

Replacing the Fuses (Models 22973 and 22974)

There are 4 fuses in the electrical system. They are under the control panel on the left side (Figure 46).

Start Circuit	30 amp
Charge Circuit	25 amp
Cooler fan Circuit	15 amp
Headlight (optional)	15 amp

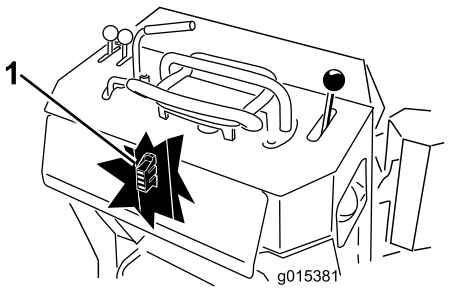

g015381

Figure 46

1. Fuse block

Drive System Maintenance

Servicing the Tracks

Cleaning the Tracks

Service Interval: Before each use or daily

Check the tracks for excessive wear and clean them periodically. If the tracks are worn, replace them.

1. Park the machine on a level surface, engage the parking brake, and lower the boom.
2. Shut off the engine and remove the key.
3. Using a water hose or pressure washer, remove dirt from each track system.

Important: **Ensure that you use high-pressure water to wash only the track area. Do not use a high-pressure washer to clean the rest of the machine. High-pressure washing can damage the electrical system and hydraulic valves or deplete grease.**

Important: **Ensure that you fully clean the road wheels and the drive wheel (Figure 47). The road wheels should rotate freely when clean.**

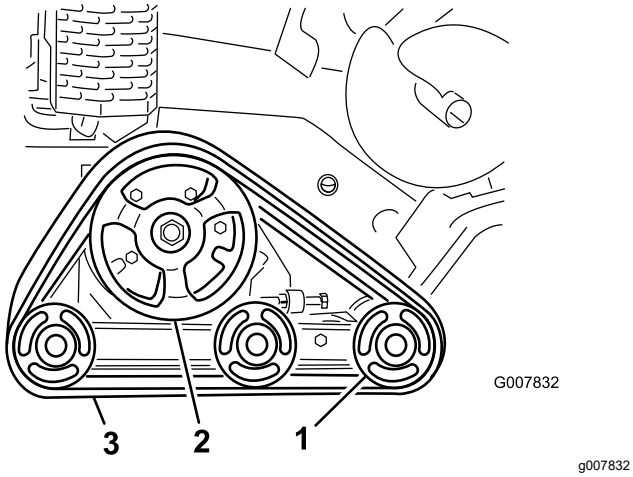

Figure 47

1. Road wheels
2. Drive wheel
3. Track

Checking and Adjusting the Track Tension

Service Interval: After the first 50 hours

Every 100 hours

To check the tension of each track, place 20.4 kg (45 lb) on the track midway between the front road wheel and the drive wheel. The track should flex no more than 0.6 to 1 cm (1/4 to 3/8 inch). If it does, adjust the track tension using the following procedure:

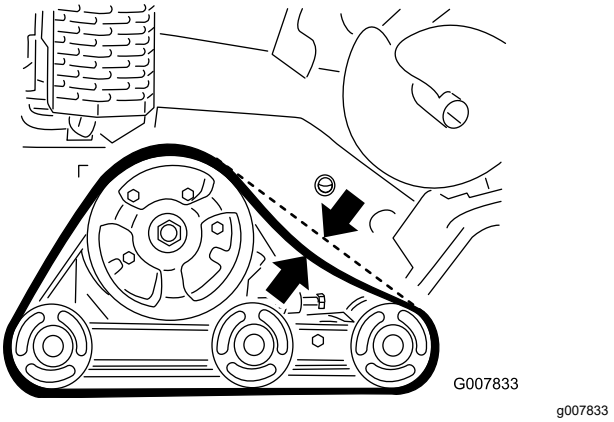

Figure 48

1. Park the machine on a level surface, engage the parking brake, and lower the boom.
2. Shut off the engine and remove the key.
3. Loosen the jam nut on the track tensioning bolt and the clamp bolts on the tension arm (Figure 49).

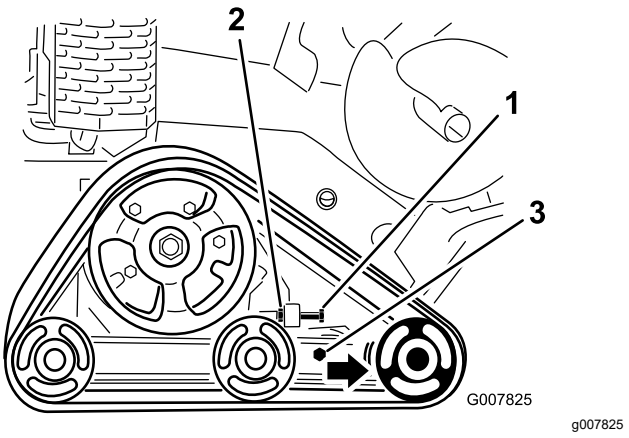

Figure 49

1. Tensioning bolt
2. Jam nut
3. Clamp bolts

4. Torque the tensioning bolt to 32.5 to 40 N·m (24 to 30 ft-lb) to tighten the track (Figure 49).
5. Ensure that the track deflects less than 0.6 to 1 cm (1/4 to 3/8 inch) when 20.6 kg (45 lb) of force is applied to the track span. Adjust the torque on the tensioning bolt as needed.
6. Tighten the jam nut.
7. Tighten the clamp bolts and torque to 102 N·m (75 ft-lb).

Replacing the Tracks

When the tracks are badly worn, replace them.

1. Park the machine on a level surface, engage the parking brake, and lower the boom.
2. Shut off the engine and remove the key.
3. Lift and support the side of the unit to be worked on so that the track is 7.6 to 10 cm (3 to 4 inches) off the ground.
4. Back out the tensioning bolt and jam nut (Figure 49).
5. Loosen the clamp bolts (Figure 49).
6. Push the front road wheel rearward as far as it can goes (Figure 50).

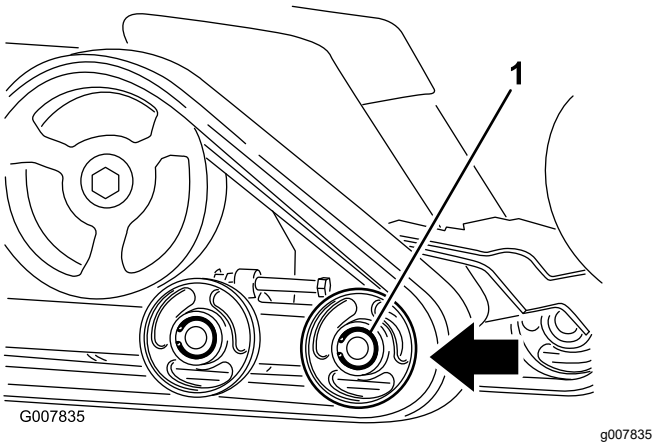

Figure 50

1. Front road wheel

7. Begin removing the track at the top of the front road wheel, peeling it off the wheel while rotating the track forward.

   Note: You may need to remove the front, outside road wheel. To remove it, remove the snap ring and cap from the center of the road wheel (Figure 51). Next remove the bolt and gasket from the center of the wheel and pull the wheel off the machine.

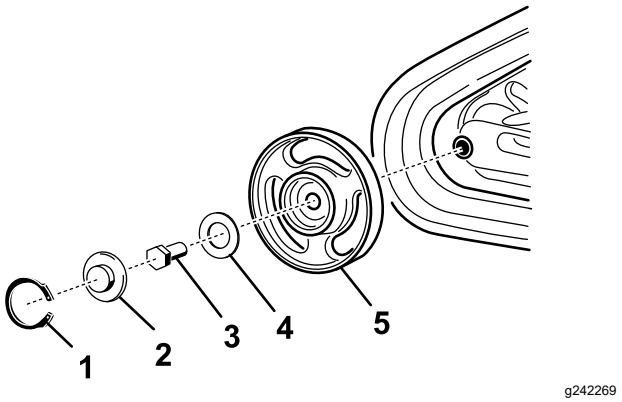

Figure 51

1. Snap ring
2. Cap
3. Bolt
4. Gasket
5. Wheel with bearings

8. When the track is off the road wheel, remove it from the machine (Figure 50).
9. Beginning at the drive wheel, coil the new track around the wheel, ensuring that the lugs on the track fit between the spacers on the wheel (Figure 50).
10. Push the track under and between the rear and center road wheels (Figure 50).
11. Starting at the bottom of the front road wheel, install the track around the wheel by rotating the track rearward while pushing the lugs into the wheel.
12. If you removed the front, outside road wheel, install it at this time using the bolt and gasket removed previously. Torque the bolt to 102 N·m (75 ft-lb) and then clean, grease, and install the cap and snap ring as instructed in the Checking and Greasing the Road Wheels (page 38).
13. Install the tensioning bolt and jam nut.
14. Torque the tensioning bolt to 32.5 to 40 N·m (24 to 30 ft-lb) to tighten the track.
15. Ensure that the track deflects less than 0.6 to 1 cm (1/4 to 3/8 inch) when 20.6 kg (45 lb) of force is applied to the track span. Adjust the torque on the tensioning bolt as needed.
16. Tighten the jam nut.
17. Tighten the clamp bolts and torque to 102 N·m (75 ft-lb).
18. Lower the machine to the ground.
19. Repeat the procedure to replace the other track.

Checking and Greasing the Road Wheels

Service Interval: Every 250 hours

1. Park the machine on a level surface, engage the parking brake, and lower the boom.
2. Shut off the engine and remove the key.
3. Remove the tracks; refer to Replacing the Tracks (page 37).
4. Remove the snap ring and cap from a road wheel (Figure 52).

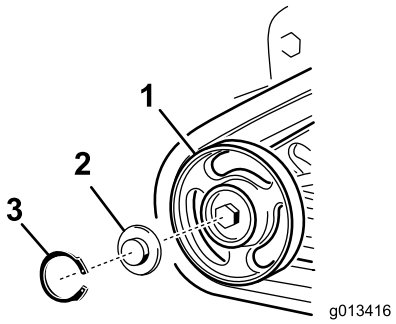

g013416

Figure 52

1. Road wheel
2. Road wheel cap
3. Snap ring

5. Check the grease under the cap and around the gasket (Figure 52). If it is dirty, gritty, or depleted, clean out all of the grease, replace the gasket, and add new grease.
6. Ensure that the road wheel turns smoothly on the bearing. If it is frozen, contact your Authorized Service Dealer to replace the road wheel.
7. Place the greased road wheel cap over the bolt head (Figure 52).
8. Secure the road wheel cap with the snap ring (Figure 52).
9. Repeat steps 4 through 8 for all 12 road wheels.
10. Install the tracks; refer to Replacing the Tracks (page 37).

Brake Maintenance

Testing the Parking Brake

Service Interval: Before each use or daily

1. Engage the parking-brake; refer to Parking-Brake Lever (page 16).
2. Start the engine.
3. Slowly attempt to drive the machine forward or rearward.
4. If the machine moves, contact your Authorized Service Dealer for service.

Belt Maintenance

Replacing the Pump-Drive Belt

If the pump drive belt begins to squeal or is cracked, worn, or frayed, replace it. Contact your Authorized Service Dealer for a replacement belt.

1. Park the machine on a level surface, engage the parking brake, and lower the boom.
2. Shut off the engine and remove the key.
3. Raise the back of the machine and support it on jack stands.
4. Remove the bottom shield; refer to Removing the Bottom Shield (page 25).
5. Loosen the 2 pump bolts (Figure 53).

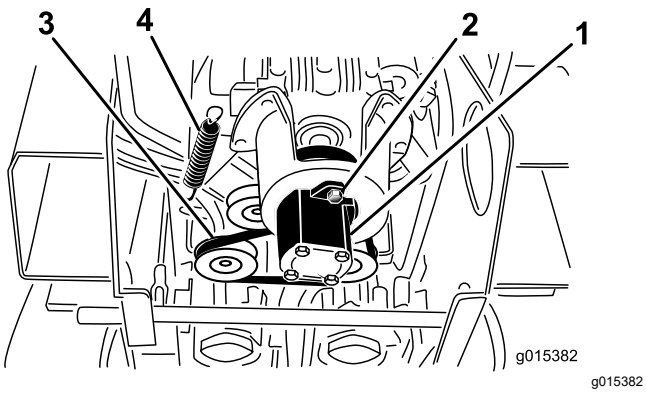

Figure 53

1. Pump
2. Pump bolts
3. Belt
4. Idler-pulley spring

6. Twist the pump counterclockwise and allow it to drop down away from the pulley (Figure 53).

   Note: Ensure that the spider coupler drops down with the pump.
7. Using a spring puller (contact your Authorized Service Dealer) or stiff metal hook, pull the end of the idler pulley spring off the spring bolt to release tension on the belt (Figure 53).
8. Remove the belt.
9. Route a new belt around the pulleys.
10. Install the idler-pulley spring on the bolt.
11. Ensure that the spider coupler is in place on the pump and then insert it into the pulley, twisting it clockwise to seat it on the pump bolts.
12. Torque the pump bolts to 68 N·m (50 ft-lb).
13. Install the bottom shield.

Controls System Maintenance

Adjusting the Traction-Control Alignment

The factory adjusts the traction controls before shipping the machine. However, after many hours of use, you may need to adjust the traction-control alignment, the neutral position of the traction control, and the tracking of the traction control in the full forward position.

Important: **To adjust the controls properly, complete each procedure in the order listed.**

Adjusting the Traction-Control Reverse Position

If the traction control bar does not rest flush and square with the reference bar when in the full reverse position, immediately complete the following procedure:

1. Park the machine on a level surface, engage the parking brake (if applicable), and lower the boom.
2. Shut off the engine and remove the key.
3. Pull back the traction control so that the front of the control contacts the reference bar (Figure 54).

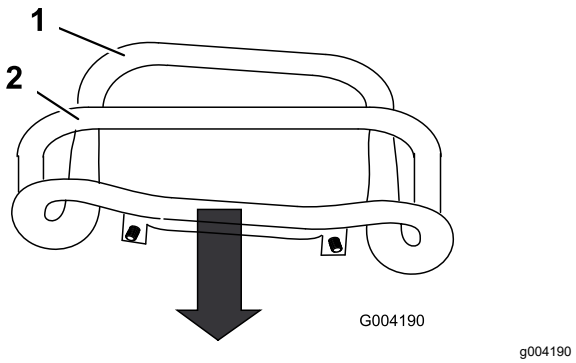

Figure 54

1. Front of the control (out of alignment)
2. Reference bar

4. If the front of the traction control does not rest square and flush with the reference bar, loosen the nut and bolt in the stem of the traction control (Figure 55).

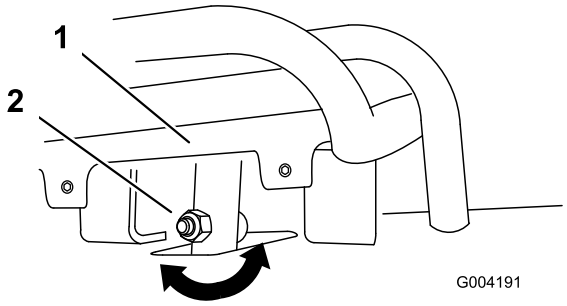

Figure 55

1. Traction control
2. Stem, bolt, and nut

5. Adjust the traction control so that it rests flush against the reference bar when it is pulled straight back (Figure 55 and Figure 56).

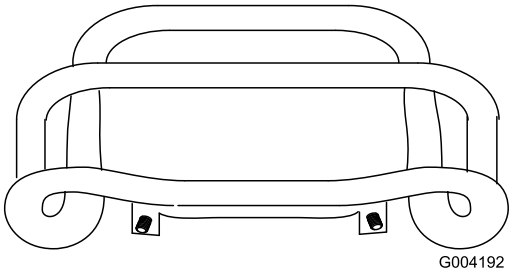

Figure 56

6. Tighten the flange nut and bolt in the traction control stem.
7. Start the engine.
8. Drive the machine in reverse with the traction control tight to the reference bar. If the machine does not back up straight, complete the following procedure:
   A. Shut off the engine
   B. Lift and support the machine so that both tracks are off the ground and are free to run.
   C. Loosen the flange nut and bolt in the stem of the traction control (Figure 55).
   D. Loosen the jam nuts on the traction rods, under the control panel (Figure 57).

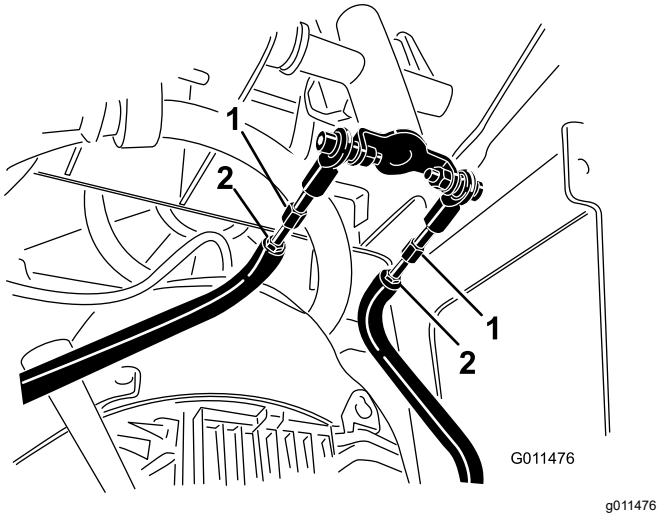

Figure 57

1. Traction rod
2. Jam nut

E. Start the machine and set the throttle to about the 1/3 open position.

⚠ WARNING

When the machine is running, you could be caught and injured in moving parts or burned on hot surfaces.

Stay away from pinch points, moving parts, and hot surfaces when adjusting the running machine.

F. Have a helper hold the traction control tight to the reference bar in reverse.

G. Adjust the length of the traction rods until both tracks are running at the same speed.

Note: You can also adjust the maximum reverse speed of the tracks at this time.

H. Tighten the jam nuts.

I. Adjust the traction control so that it rests flush against the reference bar when it is pulled straight back (Figure 55 and Figure 56).

J. Tighten the flange nut and bolt in the traction control stem.

K. Shut off the engine and lower the machine to the ground.

L. Drive the machine in full reverse, checking to see if the machine tracks straight. If it does not, note the direction the machine veers. Repeat the adjustment so that the machine tracks straight in reverse.

Adjusting the Traction-Control Neutral Position

If the machine creeps forward or backward when the traction control is in neutral and the machine is warm, you may need to adjust the return-to-neutral mechanism on the pumps; contact your Authorized Service Dealer.

Adjusting the Traction-Control Forward Position

If the machine does not drive straight when you hold the traction control forward against the reference bar, complete the following procedure:

1. Drive the machine with the traction control against the reference bar, noting which direction the machine veers.
2. Release the traction control.
3. If the machine veers to the **left**, loosen the **right** jam nut and adjust the tracking set screw on the front of the traction control (Figure 58).
4. If the machine veers to the **right**, loosen the **left** jam nut and adjust the tracking set screw on the front of the traction control (Figure 58).

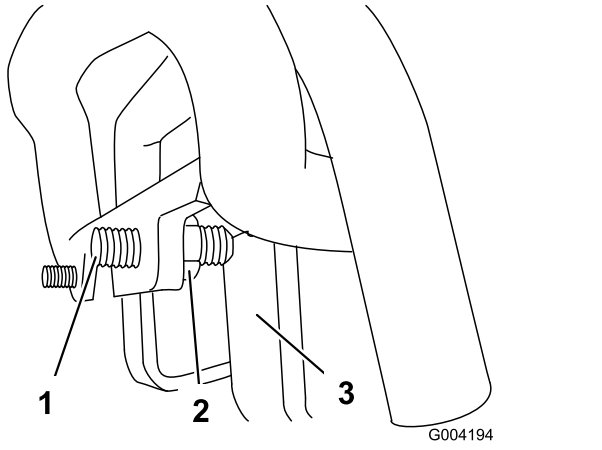

g004194

Figure 58

1. Set screw
2. Jam nut
3. Stop

5. Repeat the procedure until the machine drives straight in the full forward position.

   Important: **Ensure that the set screws touch the stops in the full forward position to avoid overstroking the hydraulic pumps.**

Hydraulic System Maintenance

Hydraulic System Safety

- Seek immediate medical attention if fluid is injected into skin. Injected fluid must be surgically removed within a few hours by a doctor.
- Ensure that all hydraulic-fluid hoses and lines are in good condition and all hydraulic connections and fittings are tight before applying pressure to the hydraulic system.
- Keep your body and hands away from pinhole leaks or nozzles that eject high-pressure hydraulic fluid.
- Use cardboard or paper to find hydraulic leaks.
- Safely relieve all pressure in the hydraulic system before performing any work on the hydraulic system.

Hydraulic Fluid Specifications

Every 1,500 hours/Every 2 years (whichever comes first)—Replace all moving hydraulic hoses.

Hydraulic Tank Capacity: 23 L (6 US gallons)

Use only 1 of the following fluids in the hydraulic system:

- **Toro Premium Transmission/Hydraulic Tractor Fluid** (refer to your Authorized Toro Dealer for more information)
- **Toro PX Extended Life Hydraulic Fluid** (refer to your Authorized Toro Dealer for more information)
- If either of the above Toro fluids are not available, you may use another **Universal Tractor Hydraulic Fluid (UTHF)**, but they must be only **conventional, petroleum-based** products. The specifications must fall within the listed range for all the following material properties and the fluid should meet the listed industry standards. Check with your hydraulic fluid supplier to determine if the fluid meets these specifications.

  Note: Toro will not assume responsibility for damage caused by improper substitutions, so use only products from reputable manufacturers who will stand behind their recommendations.

Material Properties	
Viscosity, ASTM D445	cSt at 40°C: 55 to 62
	cSt at 100°C: 9.1 to 9.8

Viscosity index, ASTM D2270	140 to 152
Pour Point, ASTM D97	-37 to -43°C (-35 to -46°F)
Industry Standards	
API GL-4, AGCO Powerfluid 821 XL, Ford New Holland FNHA-2-C-201.00, Kubota UDT, John Deere J20C, Vickers 35VQ25 and Volvo WB-101/BM	

Note: Many hydraulic fluids are almost colorless, making it difficult to spot leaks. A red dye additive for the hydraulic system fluid is available in 20 ml (0.67 fl oz) bottles. One bottle is sufficient for 15 to 22 L (4 to 6 US gallons) of hydraulic fluid. Order Part No. 44-2500 from your Authorized Toro Dealer.

Checking the Hydraulic-Fluid Level

Service Interval: Every 25 hours

Refer to Hydraulic Fluid Specifications (page 41).

1. Park the machine on a level surface, engage the parking brake (if applicable), and lower the boom.
2. Shut off the engine and remove the key.
3. Look into the glass bubble on the right side of the machine. If you cannot see hydraulic fluid in the bubble, continue this procedure to add fluid.

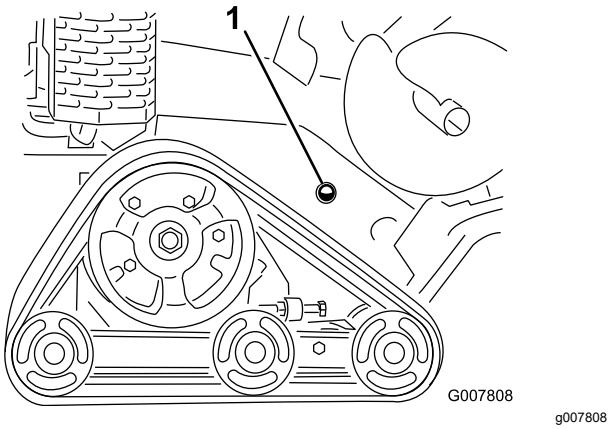

Figure 59

1. Hydraulic-fluid check bubble

4. Remove the cover plate; refer to Removing the Cover Plate (page 24).
5. Clean the area around the filler neck of the hydraulic tank and remove the cap and filter from the filler neck using a socket (Figure 60).

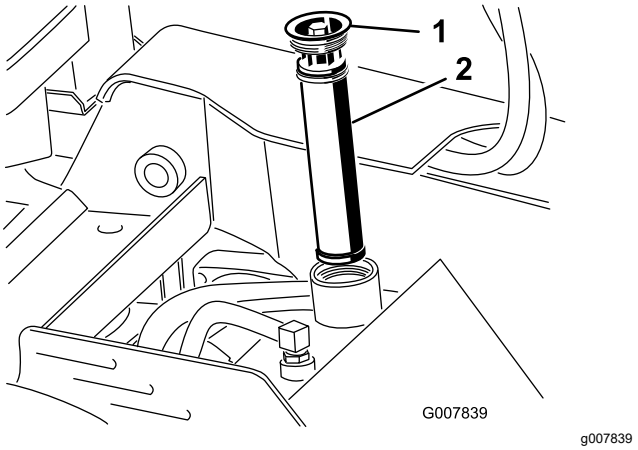

Figure 60

1. Filler-neck cap
2. Hydraulic-fluid filter

6. If the level is low, add fluid until it is visible in the glass bubble.
7. Install the cap and filter on the filler neck and torque bolt on top to 13 to 15.5 N·m (110 to 140 in-lb).
8. Install the cover plate; refer to Removing the Cover Plate (page 24).

Replacing the Hydraulic Filter

Service Interval: Every 200 hours

1. Park the machine on a level surface, engage the parking brake (if applicable), and lower the boom.
2. Shut off the engine and remove the key.
3. Remove the cover plate; refer to Removing the Cover Plate (page 24).
4. Remove and discard the old filter (Figure 61).

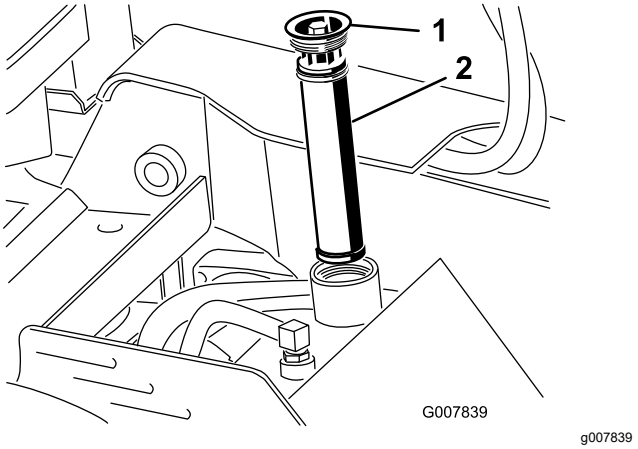

Figure 61

1. Filler cap
2. Hydraulic filter

5. Install the replacement hydraulic filter and filler cap (Figure 61) and torque the bolt on top to 13 to 15.5 N·m (110 to 140 in-lb).
6. Clean up any spilled fluid.
7. Install the top cover.

Changing the Hydraulic Fluid

Service Interval: Every 400 hours/Yearly (whichever comes first)

1. Park the machine on a level surface, engage the parking brake (if applicable), and lower the boom.
2. Shut off the engine and remove the key.
3. Allow the machine to cool completely.
4. Remove the cover plate; refer to Removing the Cover Plate (page 24).
5. Remove the hydraulic-tank filler cap and filter (Figure 61).
6. Place a drain pan capable of holding 37.8 L (10 US Gallons) under the hydraulic tank.
7. Pinch the hose clamp and slide the clamp and hose off the fitting on the hydraulic tank, allowing the hydraulic fluid to drain from the hose and tank into the pan.

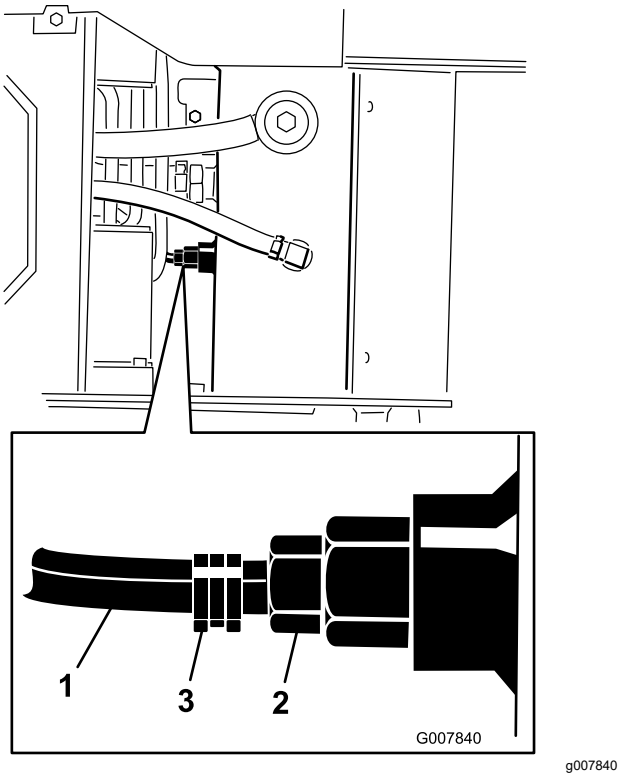

g007840

Figure 62

1. Hose
2. Hydraulic-tank fitting
3. Hose clamp

8. When finished, install the hose onto the fitting and secure it with the hose clamp.

   Note: Dispose of the used oil at a certified recycling center.
9. Fill the hydraulic tank with hydraulic fluid; refer to Hydraulic Fluid Specifications (page 41).
10. Install the hydraulic filter and filler cap (Figure 61) and torque the bolt on top to 13 to 15.5 N·m (110 to 140 in-lb).
11. Start the engine and let it run for a few minutes.
12. Shut off the engine.
13. Check the hydraulic-fluid level and top it off if necessary; refer to Checking the Hydraulic-Fluid Level (page 42).
14. Clean up any spilled fluid.
15. Install the top cover.

Trencher Maintenance

Replacing the Digging Teeth

Service Interval: Before each use or daily—Check the condition of the digging teeth and replace any that are worn or damaged.

Due to the high amount of wear placed on the digging teeth, you will need to replace them periodically.

To replace a single tooth, remove the bolts securing the tooth to remove it, then install a new tooth in the same position. Torque the bolts securing the teeth to 37 to 45 N·m (27 to 33 ft-lb).

Checking and Adjusting the Digging Chain and Boom

Service Interval: Every 25 hours

- Check each link in the chain for excessive wear, such as links that can no longer hold teeth.
- Inspect the bottom of the boom for wear.
- With the trencher parallel to the ground, ensure that there are 3.8 to 6.3 cm (1-1/2 to 2-1/2 inches) between the bottom of the boom and the top of the bottom chain span. If not, adjust the chain tension.

  Important: **Do not overtighten the chain. Excessive chain tension may damage drive components.**

To replace a worn chain, flip or replace a worn boom, or adjust the chain tension, use the following procedure:

1. Park the machine on a level surface, engage the parking brake, and lower the boom.
2. Shut off the engine and remove the key.
3. If you are replacing the chain or flipping or replacing the boom, complete the following:
   A. Remove the 2 bolts and nuts securing the boom to the trencher arm.

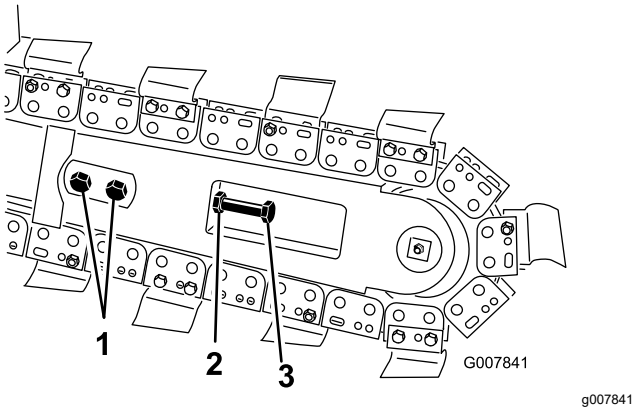

g007841

Figure 63

1. Bolts
2. Jam nut
3. Adjusting bolt

   B. Loosen the jam nut on the adjusting bolt in the boom.
   C. Loosen the adjusting bolt until you can remove the chain from the boom.
   D. Remove the chain from the drive sprocket.
   E. If the chain needs replacing, remove the bolt and nut securing the spoils auger and remove the auger and chain.
   F. Remove the boom, flip it over so the bottom becomes the top (or if you have already flipped it once, replace it), and install the boom again.
   G. Replace the nuts, bolts, and washers to secure the boom.
   H. If you are installing a new chain, connect the links by pressing or hammering the clevis pin supplied with the chain through the links, then secure the clevis pin with the cotter pin supplied with the chain.

      Important: **To avoid bending the chain links, place blocks under and between the links when hammering the clevis pin through.**

   I. Install the chain over the drive sprocket and front roller.
   J. If you removed the spoils auger, install it using the bolt and nut you removed previously. Torque the bolt and nut to 102 N·m (75 ft-lb).
   K. Skip to step 6 to complete the adjustment.
4. Loosen the 2 bolts and nuts securing the boom to the trencher arm
5. Loosen the jam nut securing the adjustment bolt.
6. Turn the adjustment bolt in or out as needed to achieve the desired tension.

7. Tighten the jam nut.
8. Torque the 2 bolts and nuts securing the boom to 183 to 223 N·m (135 to 165 ft-lb).

Replacing the Drive Sprocket

Over time, the drive sprocket wears, especially when it is used in sandy or clay soils. When this happens, the digging chain begins to slip. If the chain slips, replace the drive sprocket as follows:

1. Park the machine on a level surface, engage the parking brake
2. Raise the trencher a few inches above the ground.
3. Shut off the engine and remove the key.
4. Remove the spoils auger (Figure 64).

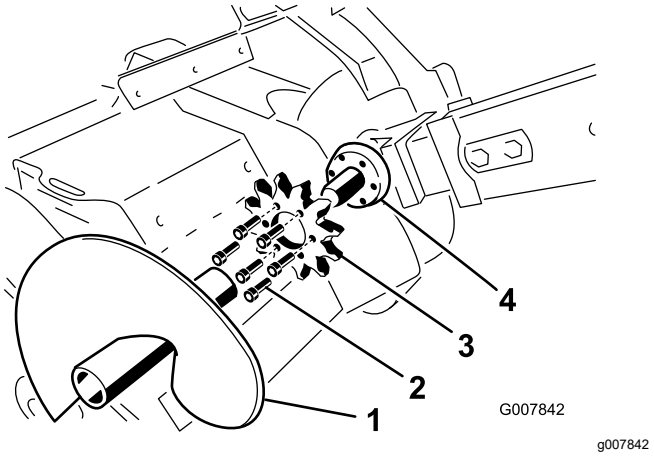

Figure 64

1. Spoils auger
2. Bolts
3. Drive sprocket
4. Sprocket mounting surface

5. Loosen the 2 bolts and nuts securing the boom to the trencher arm.
6. Loosen the jam nut on the adjusting bolt in the boom.
7. Loosen the adjusting bolt until you can remove the chain from the boom.
8. Remove the chain from the drive sprocket.
9. Remove the 6 bolts securing the drive sprocket (Figure 64).
10. Remove and discard the drive sprocket (Figure 64).
11. Clean the sprocket mounting surface on the trencher (Figure 64).
12. Slide the new sprocket onto the shaft (Figure 64).

Important: **The arrow on the sprocket face should be visible from the right side of the trench and should point in a clockwise direction; if not, turn the sprocket around.**

13. Thread the 6 bolts into the sprocket finger tight (Figure 64).
14. Slowly begin tightening the bolts progressing around the sprocket until all bolts are torqued to 129 to 155 N·m (95 to 115 ft-lb).

Important: **Tighten each bolt only halfway first, working your way around the 6 bolts, then return to each bolt in turn and torque them**

15. Loop the chain over the auger drive shaft and onto the drive sprocket, ensuring that the teeth point forward on the upper span.
16. Set the upper span of the chain into place on the trencher boom, then wrap the chain around the roller at the end of the boom.
17. Thread the adjustment bolt into the boom and turn it in until there is 3.8 to 6.3 cm (1-1/2 to 2-1/2 inches) of slack in the chain on the bottom span.
18. Thread the jam nut down the adjusting bolt and tighten it securely against the boom.
19. Torque the 2 bolts and nuts securing the boom to 183 to 223 N·m (135 to 165 ft-lb).
20. Install the spoils auger using the bolt and nut you removed previously.

Note: Torque the bolt and nut to 102 N·m (75 ft-lb).

Cleaning

Removing Debris from the Machine

Service Interval: After each use

Important: **Operating the engine with blocked screens, dirty or plugged cooling fins, and/or cooling shrouds removed will result in engine damage from overheating.**

1. Park the machine on a level surface, engage the parking brake (if applicable), and lower the boom.
2. Shut off the engine, remove the key, and wait for the engine to cool.
3. Wipe away debris from the air cleaner.
4. Clean any debris buildup on the engine and muffler with a brush or blower.

   Important: **It is preferable to blow dirt out, rather than washing it out. If you use water, keep it away from electrical items and hydraulic valves. Do not use a high-pressure washer. High-pressure washing can damage the electrical system and hydraulic valves or deplete grease.**
5. Clean debris from the oil cooler.

Storage

Storage Safety

- Shut off the engine, remove the key, wait for all moving parts to stop, and allow the machine to cool before storing it.
- Do not store the machine or fuel near flames.

Storage

1. Park the machine on a level surface, engage the parking brake, and lower the boom.
2. Shut off the engine, remove the key, and wait for the engine to cool.
3. Remove dirt and grime from the external parts of the entire machine, especially the engine. Clean dirt and chaff from the outside of the engine cylinder head fins and blower housing.

   Important: **You can wash the machine with mild detergent and water. Do not pressure-wash the machine. Avoid excessive use of water, especially near the control panel, engine, hydraulic pumps, and motors.**
4. Service the air cleaner; refer to Engine Maintenance (page 27).
5. Grease the machine; refer to Lubrication (page 25).
6. Change the crankcase oil; refer to Engine Maintenance (page 27).
7. Remove the spark plug and check the condition of it; refer to Engine Maintenance (page 27).
8. For storage over 30 days, prepare the machine as follows:
   A. Add fuel stabilizer/conditioner to fresh fuel in the tank. Follow the mixing instructions from the fuel-stabilizer manufacturer. Do not use an alcohol-based stabilizer (ethanol or methanol).
   B. Run the engine to distribute conditioned fuel through the fuel system for 5 minutes.
   C. Shut off the engine, allow it to cool, and drain the fuel tank using a pump type syphon.
   D. Start the engine and run it until it shuts off.
   E. Engage the choke.
   F. Start and run the engine until it does not start again.
   G. Dispose of fuel properly. Recycle according to local codes.

Important: **Do not store fuel containing stabilizer/conditioner longer than the duration recommended by the fuel-stabilizer manufacturer.**

9. With the spark plug removed from the engine, pour 2 tablespoons of engine oil into the spark-plug hole.
10. Place a rag over the spark-plug hole to catch any oil spray, then use the starter or recoil handle to crank the engine and distribute the oil inside the cylinder.
11. Install the spark plug, but do not install the wire on the spark plug.
12. Charge the battery; refer to Charging the Battery (page 34).
13. Check and adjust the track tension; refer to Checking and Adjusting the Track Tension (page 36).
14. Check and adjust the digging chain tension; refer to Checking and Adjusting the Digging Chain and Boom (page 44).
15. Check and tighten all fasteners. Repair or replace any part that is damaged.
16. Paint all scratched or bare metal surfaces with paint available from your Authorized Service Dealer.
17. Store the machine in a clean, dry garage or storage area. Remove the key from the ignition switch and keep it in a memorable place.
18. Cover the machine to protect it and keep it clean.

Troubleshooting

Problem	Possible Cause	Corrective Action
The starter does not crank (electric-start machines only).	1. The battery is discharged. 2. The electrical connections are corroded or loose. 3. The relay or switch is damaged.	1. Charge the battery or replace it. 2. Check the electrical connections for good contact. 3. Contact your Authorized Service Dealer.
The engine does not start, starts hard, or fails to keep running.	1. The fuel tank is empty. 2. The fuel-shutoff valve is closed. 3. The controls are not in neutral. 4. The choke is not on. 5. The air cleaner is dirty. 6. The spark-plug wire is loose or disconnected. 7. The spark plug is pitted, fouled, or the gap is incorrect. 8. Dirt, water, or stale fuel is in fuel system.	1. Fill the tank with fresh fuel. 2. Open the fuel-shutoff valve. 3. Move the controls to neutral. 4. Move the choke lever fully forward. 5. Clean or replace the air-cleaner elements. 6. Install the wire on the spark plug. 7. Install a new, correctly gapped spark plug. 8. Contact your Authorized Service Dealer.
The engine loses power.	1. The engine load is excessive. 2. The air cleaner is dirty. 3. The oil level in the crankcase is low. 4. The cooling fins and air passages under the engine blower housing are plugged. 5. The spark plug is pitted, fouled, or the gap is incorrect. 6. Dirt, water, or stale fuel is in the fuel system.	1. Reduce the ground speed. 2. Clean or replace the air-cleaner elements. 3. Check and add oil to the crankcase. 4. Remove any obstructions from the cooling fins and air passages. 5. Install a new, correctly gapped spark plug. 6. Contact your Authorized Service Dealer.
The engine overheats.	1. The engine load is excessive. 2. The oil level in crankcase is low. 3. The cooling fins and air passages under the engine blower housing are plugged.	1. Reduce the ground speed. 2. Check and add oil to the crankcase. 3. Remove any obstructions from the cooling fins and air passages.
There is abnormal vibration.	1. The engine mounting bolts are loose.	1. Tighten the engine mounting bolts.
The machine does not drive.	1. The parking brake is engaged. 2. The hydraulic-fluid level is low. 3. The tow valves are open. 4. The hydraulic system is damaged.	1. Disengage the parking brake. 2. Check and add hydraulic fluid. 3. Close the tow valves. 4. Contact your Authorized Service Dealer.
The chain does not turn.	1. Sand or debris has built up in a tooth root of the drive sprocket. 2. The digging chain is too tight. 3. The trencher boom end bearing has failed. 4. The trencher drive system is damaged. 5. The hydraulic system is obstructed, contaminated, or damaged.	1. Run the chain backward and then reduce the chain tension. 2. Adjust the digging chain tension. 3. Contact your Authorized Service Dealer. 4. Contact your Authorized Service Dealer. 5. Contact your Authorized Service Dealer.

Problem	Possible Cause	Corrective Action
The trencher does not dig fast enough.	1. The digging teeth are worn. 2. The chain you are using is not appropriate for the type of ground. 3. The hydraulic system is overheated. 4. The hydraulic system is obstructed, contaminated, or damaged.	1. Replace the digging teeth. 2. Evaluate the ground type and change chains if necessary. 3. Shut down and allow the system to cool. 4. Contact your Authorized Service Dealer.

Schematics

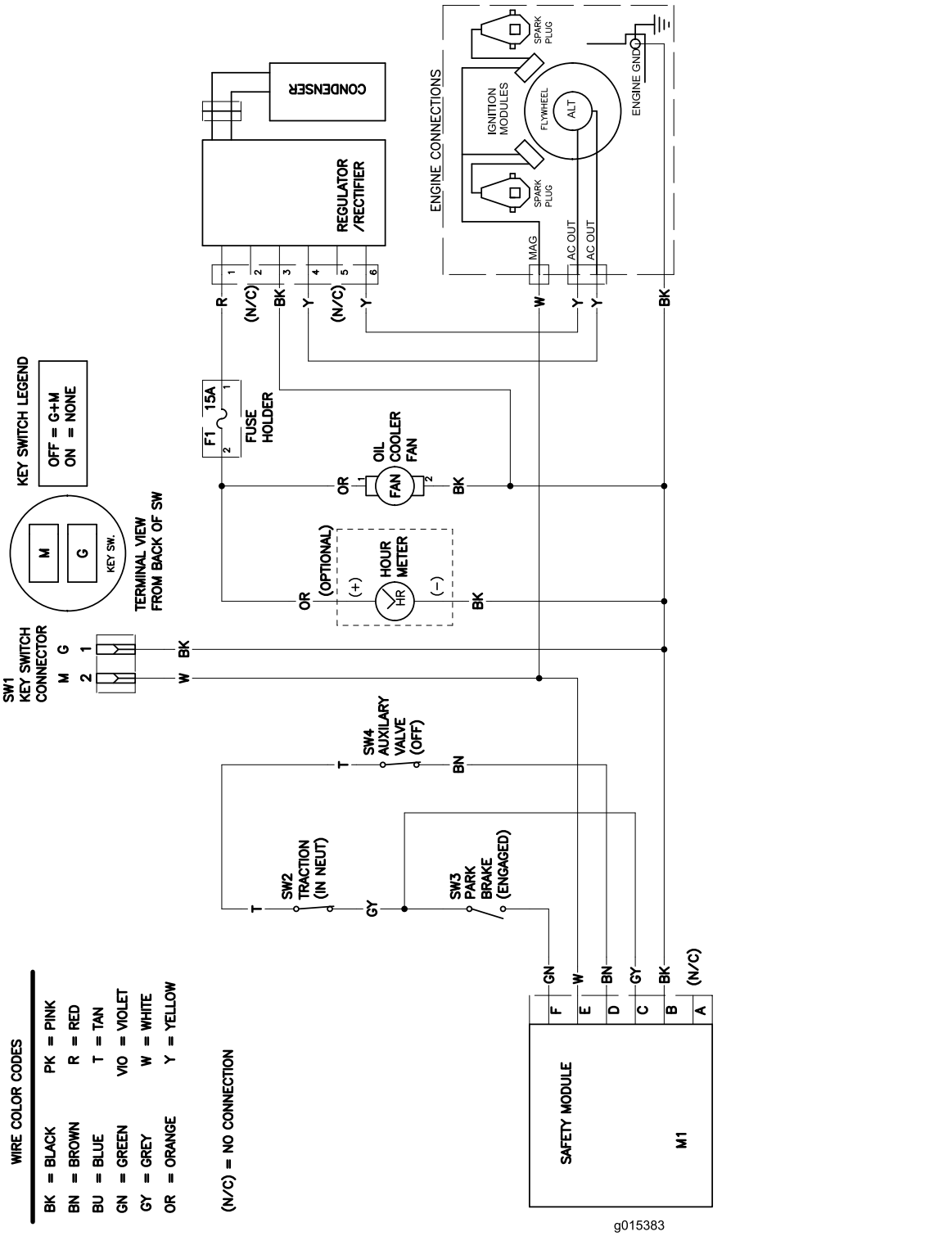

g015383

Electrical Schematic—Model 22972 (Rev. A)

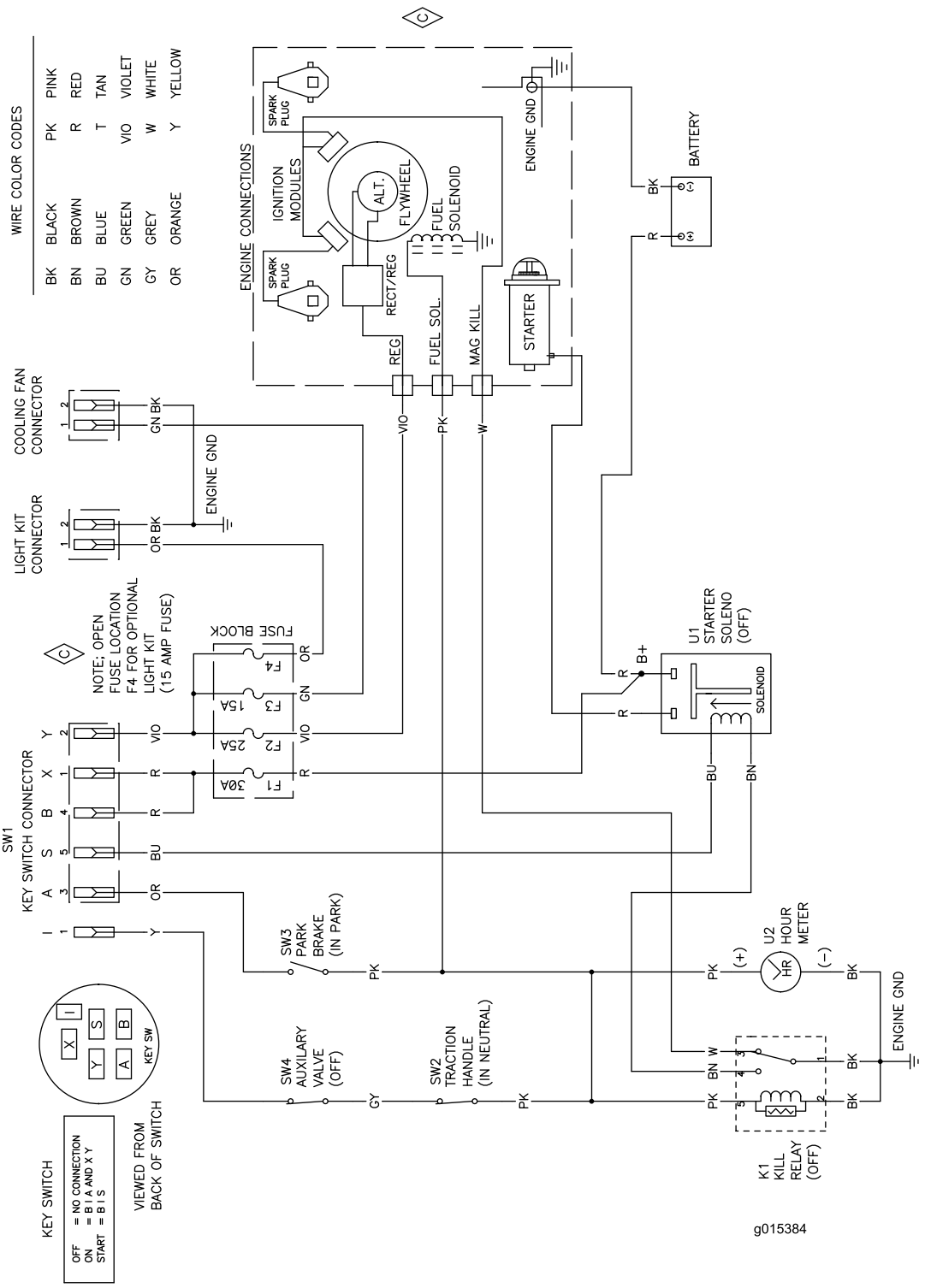

g015384

Electrical Schematic—Model 22973 (Rev. A)

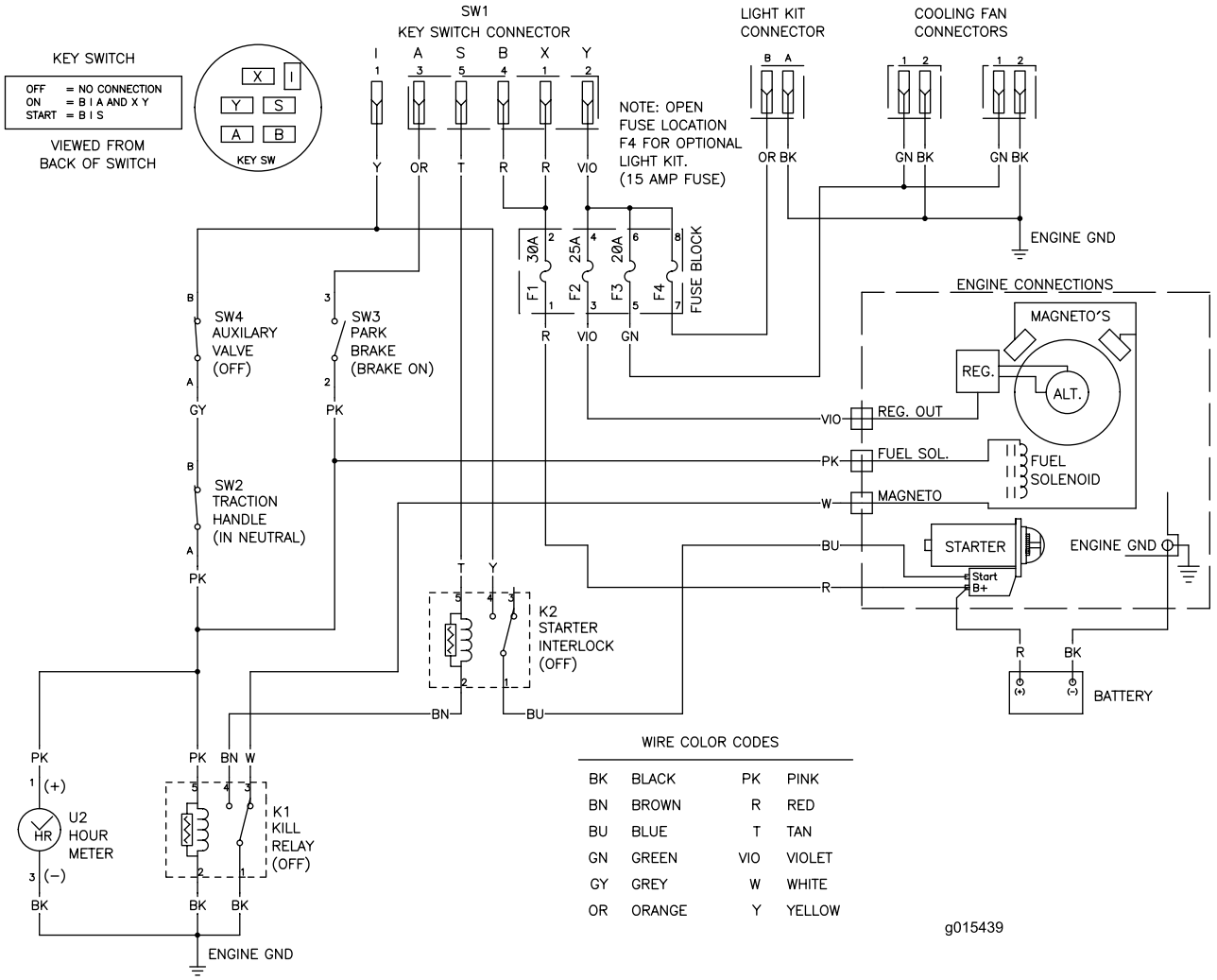

g015439

Electrical Schematic—Model 22974 (Rev. A)

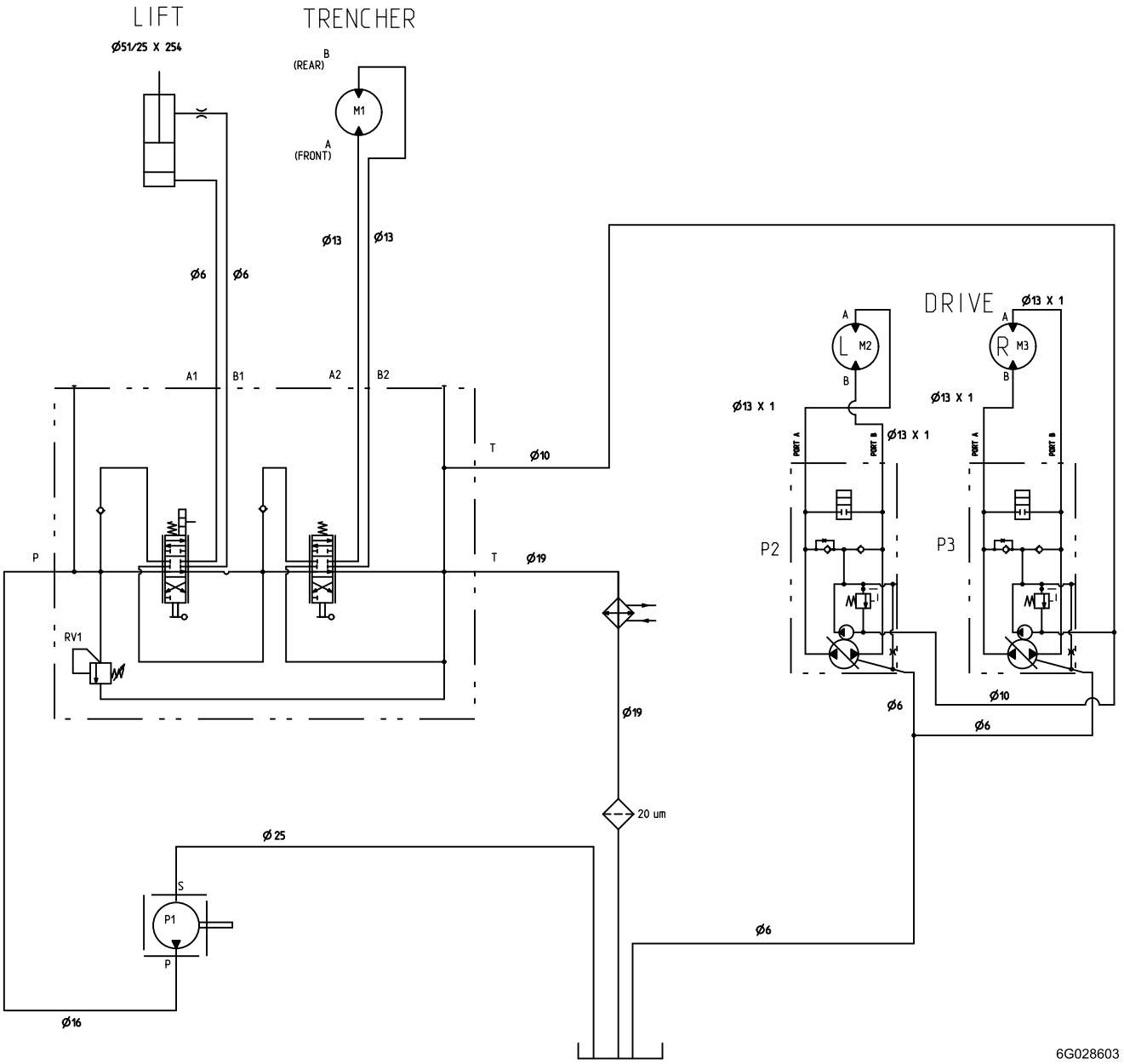

Models 22972, 22972G, 22973, and 22973G

DISPLACEMENT AND PRESSURE CHART						
COMPONENT	DISPLACEMENT		PRESSURE		FLOW RATE*	
COMPONENT	CU IN/REV	CU CM/REV	PSI	BARS	GPM	LPM
P1	.66	10.9	3625	250	10.4	39.2
P2, P3	.61	10.0	2100	145	9.5	36.0
M1	10.3	170	-----	-----	-----	-----
M3, M2	24.7	404	-----	-----	-----	-----
RV1	-----	-----	2900	200	-----	-----

* FLOW RATE IS THEORETICAL. IT IS CALCULATED USING ENGINE SPEED OF 3600 RPM. IT DOES NOT ACCOUNT FOR COMPONENT EFFICIENCIES.

Model 22974

DISPLACEMENT AND PRESSURE CHART						
COMPONENT	DISPLACEMENT		PRESSURE		FLOW RATE*	
COMPONENT	CU IN/REV	CU CM/REV	PSI	BARS	GPM	LPM
P1	.89	14.5	4061	280	13.5	51.1
P2, P3	.61	10.0	2100	145	9.5	36.0
M1	14.5	237	-----	-----	-----	-----
M3, M2	24.7	404	-----	-----	-----	-----
RV1	-----	-----	2900	200	-----	-----

* FLOW RATE IS THEORETICAL. IT IS CALCULATED USING ENGINE SPEED OF 3600 RPM. IT DOES NOT ACCOUNT FOR COMPONENT EFFICIENCIES.

g028603

Hydraulic Schematic (Rev. C)

Notes:

Notes:

California Proposition 65 Warning Information

What is this warning?

You may see a product for sale that has a warning label like the following:



WARNING: Cancer and Reproductive Harm—www.p65Warnings.ca.gov.

What is Prop 65?

Prop 65 applies to any company operating in California, selling products in California, or manufacturing products that may be sold in or brought into California. It mandates that the Governor of California maintain and publish a list of chemicals known to cause cancer, birth defects, and/or other reproductive harm. The list, which is updated annually, includes hundreds of chemicals found in many everyday items. The purpose of Prop 65 is to inform the public about exposure to these chemicals.

Prop 65 does not ban the sale of products containing these chemicals but instead requires warnings on any product, product packaging, or literature with the product. Moreover, a Prop 65 warning does not mean that a product is in violation of any product safety standards or requirements. In fact, the California government has clarified that a Prop 65 warning "is not the same as a regulatory decision that a product is 'safe' or 'unsafe.'" Many of these chemicals have been used in everyday products for years without documented harm. For more information, go to https://oag.ca.gov/prop65/faqs-view-all.

A Prop 65 warning means that a company has either (1) evaluated the exposure and has concluded that it exceeds the "no significant risk level"; or (2) has chosen to provide a warning based on its understanding about the presence of a listed chemical without attempting to evaluate the exposure.

Does this law apply everywhere?

Prop 65 warnings are required under California law only. These warnings are seen throughout California in a wide range of settings, including but not limited to restaurants, grocery stores, hotels, schools, and hospitals, and on a wide variety of products. Additionally, some online and mail order retailers provide Prop 65 warnings on their websites or in catalogs.

How do the California warnings compare to federal limits?

Prop 65 standards are often more stringent than federal and international standards. There are various substances that require a Prop 65 warning at levels that are far lower than federal action limits. For example, the Prop 65 standard for warnings for lead is 0.5 µg/day, which is well below the federal and international standards.

Why don't all similar products carry the warning?

- Products sold in California require Prop 65 labelling while similar products sold elsewhere do not.
- A company involved in a Prop 65 lawsuit reaching a settlement may be required to use Prop 65 warnings for its products, but other companies making similar products may have no such requirement.
- The enforcement of Prop 65 is inconsistent.
- Companies may elect not to provide warnings because they conclude that they are not required to do so under Prop 65; a lack of warnings for a product does not mean that the product is free of listed chemicals at similar levels.

Why does Toro include this warning?

Toro has chosen to provide consumers with as much information as possible so that they can make informed decisions about the products they buy and use. Toro provides warnings in certain cases based on its knowledge of the presence of one or more listed chemicals without evaluating the level of exposure, as not all the listed chemicals provide exposure limit requirements. While the exposure from Toro products may be negligible or well within the "no significant risk" range, out of an abundance of caution, Toro has elected to provide the Prop 65 warnings. Moreover, if Toro does not provide these warnings, it could be sued by the State of California or by private parties seeking to enforce Prop 65 and subject to substantial penalties.