USER MANUAL
COFFEE MACHINE

EN

MANUEL DE L'UTILISATEUR
MACHINE À CAFÉ

FR

MANUAL DE USO
CAFETERA

ES

smeg

We advise you to read this manual carefully, as it contains all the instructions for managing the appliance's aesthetic and functional qualities.
For further information on the product: www.smeg.com

Nous conseillons de lire attentivement ce manuel, qui comprend toutes les indications pour maintenir inaltérées les qualités esthétiques et fonctionnelles de l'appareil acheté.
Pour obtenir des informations supplémentaires sur le produit : www.smeg.com

Aconsejamos leer atentamente este manual que contienen todas las indicaciones para mantener inalterada la calidad estética y funcional del aparato adquirido.
Más información sobre el producto en: www.smeg.com

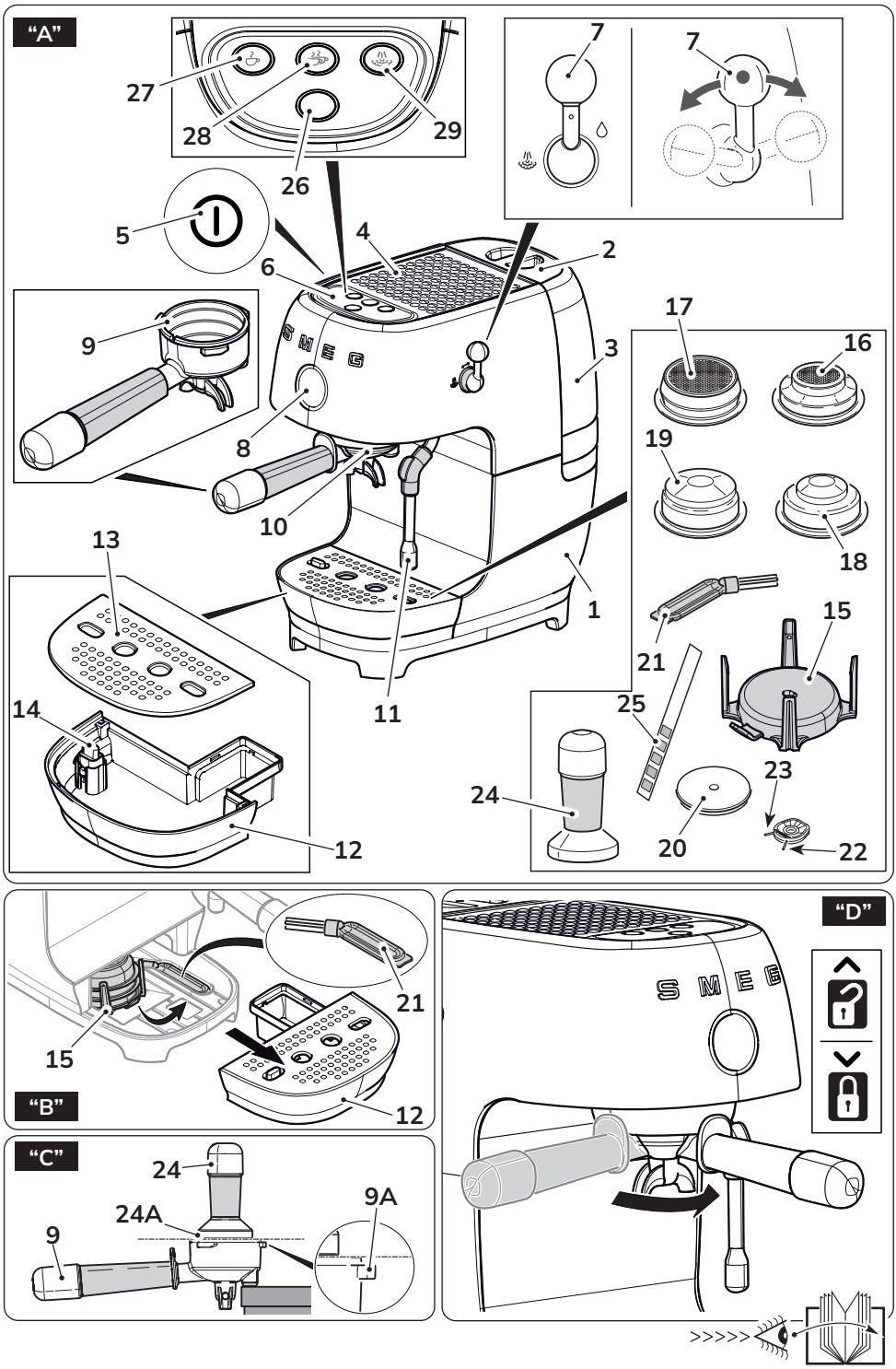
"A"
27
28
29
26
7
7
5
4
2
6
9
3
17
16
8
19
10
18
13
1
15
21
11
14
25
23
24
20
22
12
21
15
"B"
12
"C"
24
24A
9A
9
"D"
SMEG

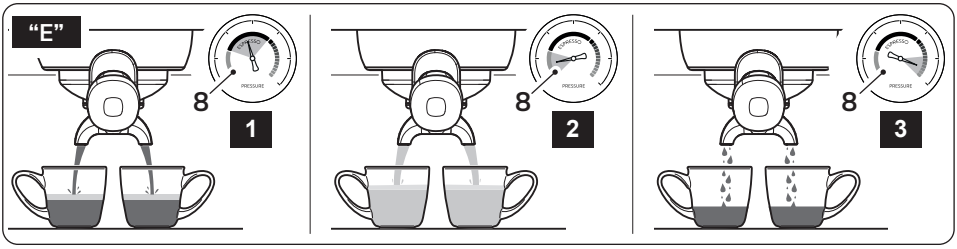
"E"
8
PRESSURE
1
espresso
2
3

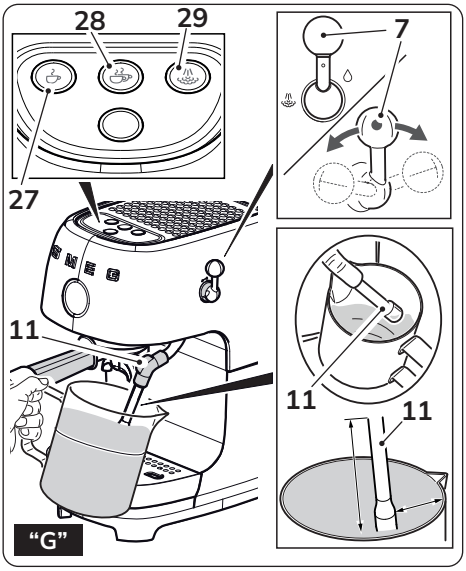
28
29
27
7
11
"G"

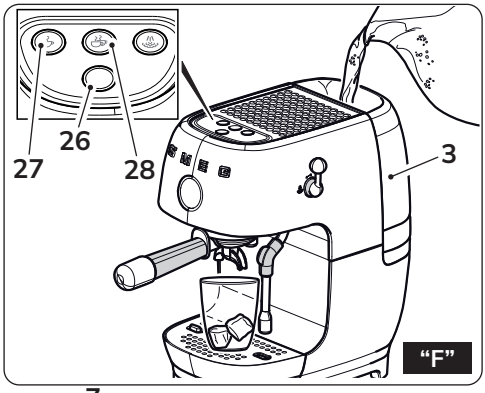
27
26
28
3
"F"

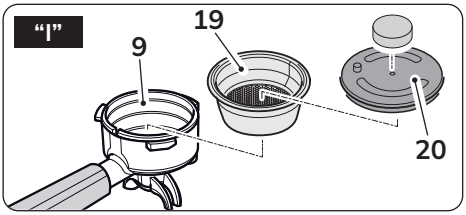
"I"
9
19
20

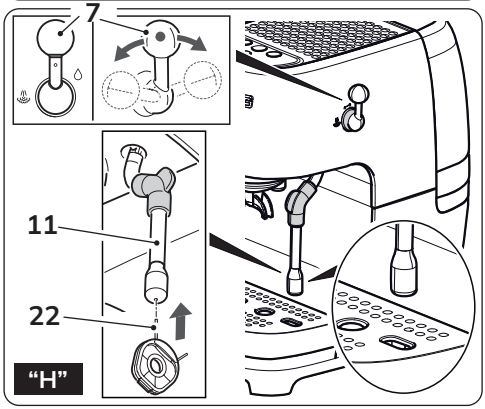
7
11
22
"H"

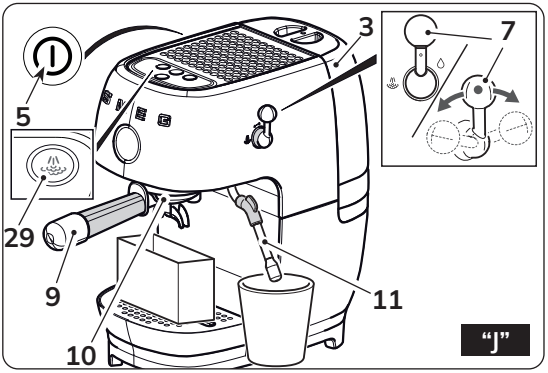
3
7
5
29
9
10
11
"J"

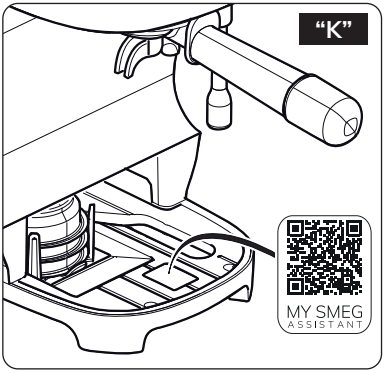
"K"
MY SMEG
ASSISTANT

Important information for the user
Informations importantes pour l'utilisateur / Información importante para el usuario

Instructions / Avertissements / Advertencias
General information on this user manual, on safety and final disposal / Informations générales sur ce manuel d'utilisation, sur la sécurité et sur l'élimination définitive de l'appareil / Información general del manual relativa al uso, la seguridad y la eliminación final

Description / Description / Descripción
Appliance description / Description de l'appareil / Descripción del aparato

Use / Utilisation / Uso
Information on using your appliance / Informations sur l'utilisation de l'appareil / Información sobre el uso del aparato

Cleaning and care / Nettoyage et entretien / Limpieza y mantenimiento
Information for proper cleaning and maintenance of the appliance/ Informations pour un nettoyage et un entretien corrects de l'appareil / Información sobre la limpieza y el mantenimiento correctos del aparato

Safety instructions / Consignes de sécurité / Advertencia de seguridad

Information / Information / Información

Advice / Conseil / Sugerencia

Scan the QR code for a quick access to the portal My Smeg Assistant
Scannez le code QR pour accéder rapidement au portail My Smeg Assistant
Escanee el código QR para acceder rápidamente al portal My Smeg Assistant

MY SMEG
ASSISTANT

NOTES

The manufacturer reserves the right to make any changes deemed useful for the improvement of its products without priornotice. The illustrations and descriptions contained in this manual are therefore not binding and are merely indicative.

Le fabricant se réserve la faculté d'apporter, sans préavis, toutes les modifications qu'il jugera utiles pour l'amélioration de ses produits. Les illustrations et les descriptions figurant dans ce manuel ne sont pas contraignantes et n'ont qu'une valeur indicative.

El fabricante se reserva el derecho a aportar sin aviso previo todas las modificaciones que considere útiles para la mejora de sus propios productos. Las ilustraciones y las descripciones contenidas en este manual no comprometen, por tanto, al fabricante y tienen un valor meramente indicativo.

Important instructions

WARNING: If the instructions contained in this manual are not followed precisely, fire or explosion may result causing property damage, personal injury or death.

READ AND SAVE THESE INSTRUCTIONS

Your safety and the safety of others are very important.
We have provided many important safety messages throughout this manual and on the appliance.
Read all the instructions before using the appliance and always obey all safety messages.

WARNING

- **To reduce the risk of fire or electric shock, do not remove the cover (or back).**
- **No user-serviceable parts inside!**
- **Repair should be done by authorized service personnel only.**

RECOGNIZE SAFETY INFORMATION

This is a safety alert symbol. This symbol alerts you to potential hazards that can result in severe personal injury or death.

UNDERSTAND SIGNAL WORDS

A signal word - DANGER, WARNING or CAUTION - is used with the safety alert symbol. DANGER denotes the most serious hazards. It means you could be killed or seriously injured if you do not immediately follow the instructions. WARNING means you could be killed or seriously injured if the instructions are not followed. CAUTION indicates a potentially hazardous situation, which, if not avoided, could result in minor to moderate injury.

IMPORTANT INSTRUCTIONS

ATTENTION

- **This appliance is intended for use in the home only.**
- **Use this appliance only for its intended purpose. The manufacturer cannot be held liable for damage caused by improper use of this appliance.**
- **This appliance complies with current safety regulations. Improper use of this appliance can result in personal injury and material damage.**
- **Read all the instructions before installing or using the appliance for the first time.**
- **Keep these operating instructions in a safe place and pass them on to any future user.**

The safety messages will inform you of potential hazards, on how to avoid the risk of injury
and what can occur if the instructions are not followed.
IMPORTANT: Observe all codes and ordinances in force.

WARNING: For your safety, the instructions contained in this manual must be followed to minimize the risk of fire or explosion and to prevent property damage, personal injury or death.

Do not store or use gasoline or other flammable vapors, liquids or materials near this or any other appliance.

NOTE: This appliance is NOT designed for installation in manufactured (mobile) homes or in recreational vehicles (RVs).

NOTE:

GROUNDED PLUG (for product manufactured with a grounded plug)
As a safety feature, this product is equipped with grounded plug, which will only fit into a three-prong outlet. Do not attempt to bypass this safety feature. Improper connection of the grounding conductor may result in the risk of electric shock. Consult a qualified electrician if you have any doubts on whether the outlet is properly grounded.

IMPORTANT SAFEGUARDS

WARNING When using electrical appliances, basic safety precautions should always be followed to reduce the risk of fire, electric shock, and / or injury to person including the following:

1 Warnings

Follow all safety precautions to ensure safe use of the appliance.

- Before using the appliance, read this user manual carefully.
- Do not use the appliance outdoors.
- This appliance is for household use only.
- Do not use the appliance for other than its intended use.
- Do not allow children to use the appliance.
- Children should not play with the appliance. Keep the appliance out of the reach of children.
- Keep the packaging material (plastic bags, expanded polystyrene) out of the reach of children.
- Close supervision is necessary when any appliance is used by or near children.
- Turn off the appliance immediately after use.
- Do not leave the appliance unattended while it is running.
- Disconnect the appliance from the wall outlet before assembly, disassembly, cleaning and after each use.
- To disconnect, turn any control to “off,” then remove plug from wall outlet.
- Turn the appliance OFF, then unplug from the outlet when not in use, before assembling or disassembling parts and before cleaning. To unplug, grasp the plug and pull from the outlet. Never pull from the power cord.
- To protect against fire, electrical shock and personal injury, do not immerse the appliance, the power cord or plug in water or any other liquid.
- Do not touch the appliance or the plug with wet hands.
- Never try to extinguish a flame/fire with water: turn off the appliance, unplug it from the outlet and cover the flame with a lid or a fire blanket.
- Do not use the appliance if the power cord or plug is damaged or if the appliance has been dropped or damaged in any way.
- Do not let cord hang over edge of table or counter, or touch hot surfaces.
- Do not operate any appliance with a damaged cord or plug or after the appliance malfunctions, or has been damaged in any manner. Return appliance to an authorized service facility for examination, repair or adjustment.
- Make sure the power cord does not come in contact with sharp edges.
- Do not pull on the cord to remove the plug from the socket.

SAVE THESE INSTRUCTIONS

IMPORTANT SAFEGUARDS

- Do not place the appliance on or near switched-on gas or electric burners, inside an oven, or near heat sources.
- Do not touch hot surfaces. Use handles and knobs.
- Do not place the appliance near faucets or sinks.
- Never attempt to repair the appliance yourself or without the help of a qualified technician. Failing to do this will void the warranty.
- In case of malfunction, have the appliance repaired by a qualified technician.
- Do not make any changes to the appliance.
- Make sure that the power outlet used is always freely accessible, because only in this way can it be unplugged when necessary.
- To remove the plug from the power outlet, operate directly on the plug. Never pull the cable, it could be damaged.
- If the appliance should break down, do not attempt to repair it.
- Do not allow the power supply cable to dangle over the edge of the table or other surface or to touch hot surfaces.
- If the plug or power supply cable are damaged, have them replaced exclusively by the Technical After-sales centre, so as to prevent all risks.

To avoid the risk of injury, do not open the brew chamber during the brew process.

- Check hopper for presence of foreign objects before using.

For this appliance

- Only insert water into the appropriate tank. Use fresh, clean water.
- The appliance shall not be placed in a cabinet when in use.
- Allow to cool before putting on or taking off parts, and before cleaning the appliance.
- The appliance generates heat and produces hot water and steam during operation. Avoid contact with boiling steam or water.
- Do not fill the water container beyond the maximum limit indicated.
- Do not use without water in the tank or without a tank.
- Only use the appliance indoors and at a maximum altitude of 2000 meters.
- Use only coffee beans to obtain the powder, do not put already ground coffee in the coffee bean hopper.
- Use the device only to prepare coffee-based drinks from grinding coffee beans or to dispense hot water. Other uses are improper.
- Use only original spare parts from the manufacturer. The use of spare parts not recommended by the manufacturer may cause fire, electric shock or injury to persons.
- Place the appliance on a flat, dry surface.
- Avoid wetting or spraying liquid on the appliance. In case of contact with liquid, immediately unplug the cord from the electrical outlet and dry thoroughly: Risk of electric shock!

SAVE THESE INSTRUCTIONS

IMPORTANT SAFEGUARDS

- Scalding may occur if the lid is removed during the brewing cycles.
- Do not use abrasive cleaners or sharp objects to clean the appliance.
- The use of accessory attachments not recommended by the appliance manufacturer may result in fire, electric shock or injury to persons.
- Do not install the appliance in an environment that is not suitable.
- Do not place the appliance on or in proximity of electric or gas cookers, or in a heated oven.
- This appliance is not intended for use by persons (including children) with reduced physical, sensory, or mental capabilities, or lack of experience and knowledge, unless they are closely supervised and instructed concerning use of the appliance by a person responsible for their safety. Children should be supervised to ensure that they do not play with the appliance.
- Avoid contacting moving parts. Do not attempt to defeat any safety interlock mechanisms.
- This appliance has important markings on the plug blade. Contact a qualified technician to replace the plug with a suitable one if damaged.
- Connect the appliance only to a power outlet installed perfectly.

Electrical Cord:

a) A short power-supply cord (or detachable power-supply cord) is provided to reduce risks resulting from becoming entangled in or tripping over a longer cord.

b) Longer detachable power-supply cords or extension cords are available and may be used if care is exercised in their use.

c) If a long detachable power-supply cord or extension cord is used:

1. The marked electrical rating of the detachable power-supply cord or extension cord should be at least as great as the electrical rating of the appliance;
2. If the appliance is of the grounded type, the extension cord should be a grounding-type 3-wire cord; and
3. The longer cord should be arranged so that it will not drape over the counter top or table top where it can be pulled on by children or tripped over.

Connect the appliance

Make sure that the mains voltage corresponds with that indicated on the data plate on the bottom of the appliance. Connect the appliance only to a power outlet installed perfectly.

If the plug and power outlet are incompatible, have the power outlet replaced with a suitable type by qualified staff.

SAVE THESE INSTRUCTIONS

IMPORTANT INSTRUCTIONS

This user's manual
This user's manual is an integral part of the appliance and must be kept intact and available to the user throughout its life cycle.

Manufacturer's liability
The manufacturer declines all liability for damage undergone by persons and objects due to:
- use of the appliance different from that envisioned;
- user manual has not been read;
- tampering of individual parts of the appliance;
- use of non-original spare parts;
- failure to comply with safety recommendations.

Identification plate
The identification plate lists the technical data, serial number and brand name. The identification plate must never be removed.

Disposal

Power voltage
Risk of electric shock

- Unplug the appliance.
- Unplug the cord from the wall outlet.

- **Old electrical equipment must not be disposed of with household waste!** In accordance with the law in force, electrical appliances at the end of their life should be taken to separate collection facilities for electrical and electronic waste. This is so that valuable materials from old appliances can be recycled and the environment can be protected. For more information, please contact your local authorities or recycling center employees.

Note that non-polluting and recyclable materials are used for packaging the appliance.

- Dispose of the packaging materials at appropriate differentiated waste collection centers.

Plastic packaging
Risk of suffocation

- Do not leave the packaging or any part of it unattended.
- Do not allow children to play with the plastic packaging bags.

SAVE THESE INSTRUCTIONS

2 Description of the appliance (Fig. A)

1 Machine body
2 Water tank lid
3 Water tank (1.6 l)
4 Cup shelf
5 ON/OFF key
6 Control panel
7 Steam/water lever
8 Pressure gauge
9 Filter holder
10 Dispensing unit
11 Steam/hot water wand
12 Drip tray
13 Cup grille
14 Water level indicator
15 Accessory compartment
16 Single non-pressurised filter
17 Double non-pressurised filter
18 Single pressurized filter
19 Double pressurized filter
20 Dispensing unit cleaning disc
21 Cleaning brush
22 Steam wand cleaning needle
23 Filter hole cleaning needle
24 Tamper
25 Water hardness test strip

3 Description of the parts/ accessories (Fig. A, B)

Accessory compartment (15)

The machine has a housing for unused accessories, so that they are always available to the user.

- To access the accessory compartment, remove the drip tray (12), and then remove the accessory compartment (15) from inside the machine as shown in Fig. B.

Filters

This machine has four filters; two non-pressurised and two pressurized.

Non-pressurised filters (16, 17)
These filters allow various degrees of grinding, dosing and tamping to be tried, in order to create a perfectly balanced espresso.
When dispensing with the espresso functions, use the Single Espresso filter (16) or Double Espresso filter (17).
When dispensing using the single and double dose Cold brew functions, we recommend using the non-pressurised filter (17).

Pressurized filters (18, 19)
These filters facilitate and regulate the pressure even with imperfect grinding and dispensing or when using pre-ground coffee.
When dispensing with the espresso functions, use the Single Espresso filter (18) or Double Espresso filter (19).

Select the filter for one or two cups, as required.

Dispensing unit cleaning disc (20)
Silicone disc to be used for cleaning the dispensing unit.

Cleaning brush (21)
To be used for cleaning the dispensing unit (10) and filter holder (9).

Needles for cleaning the steam wand (22)/filter holes (23)
This accessory consists of two needles with different thicknesses: one for cleaning the hole in the steam wand (22) and the other for cleaning the holes in the coffee filters (23).

The accessory is located at the base of the accessory compartment (15).

Tamper (24)
Tamper with a stainless steel disc, 58 mm in diameter, to be used for tamping ground coffee.

Water hardness test strip (25)
Use the strip provided (25) to measure the mains water hardness as described in the “Machine settings - Water hardness” paragraph.

3.1 Description of the controls (Fig. A)

ON/OFF key (5)
Press this key to turn the machine on or off.

Dispensing program change key (26)
The product has 4 coffee functions and a steam function.
With the machine on and ready for use, press this key to change the dispensing function menu from *White* to *Blue* and vice versa.

Key	*White Menu* Function
(27)	Single espresso
(28)	Double espresso

Key	*Blue Menu* Function
(27)	Cold Brew - single dose
(28)	Cold Brew - double dose

Key	Function
(29)	Dispensing steam

Key (29) remains lit in white at all times.

3.2 Alarms

The keys flash differently to indicate the current alarm or procedure.

The keys (27), (28) and (29) flash in sequence:
The machine is reaching the correct temperature for dispensing coffee. Wait for the keys (27), (28) and (29) to light continuously, and then select the desired beverage.

The keys (27), (28) and (29) flash simultaneously:
This alarm may indicate:

- water tank alarm: no water tank (3), tank not inserted properly or not enough water to dispense coffee.
  Check that it is inserted properly or add water if necessary;
- overpressure alarm: wait for the machine to perform the automatic cycle to discharge the residual pressure;
- in steam operation, the steam lever (7) is operated before pressing the steam key (29) or before the machine has reached the preset steam temperature;
- the wand (11) is used to dispense steam or hot water for longer than 120 seconds. Return the steam lever (7) to the vertical position to end the operation.

The key (29) is lit orange, (27) and (28) off:
Indicates that a descaling cycle is required. To proceed, refer to paragraph “6.4 Descaling” in section “6 Cleaning and maintenance”.
To bypass the procedure, just press the key (27) or (28); all keys light continuously and the machine will be ready for use.

To avoid changing the flavour of the coffee and to ensure the machine operates correctly, we recommend performing the descaling cycle when the machine indicates.

If the descaling cycle is not performed, the key (29) will light orange at every switch-on until the descaling cycle has been completed.

The key (29) flashes orange fast:
The water in the tank (3) has finished before the end of the descaling/cleaning procedure.
Add water to the tank (3) and complete the descaling/cleaning procedure as described in the corresponding paragraphs.

3.3 Before using for the first time (Fig. A)

- Remove any labels and stickers from the coffee machine.
- Use a damp cloth to clean all removable components, such as: water tank (3), lid (2), accessory compartment (15), cup grille (13), filter holder (9), filters (16), (17), (18), (19), tamper (24) and other accessories.
- Remove the red protective cap located on the back of the machine, between the tank (3) and the rear machine body (1).
- Make sure that all components are thoroughly dry before refitting them.

Do not use the coffee machine without water in the tank or without the water tank inserted. FAULT HAZARD!

The parts that may come into contact with foodstuffs are made using materials that comply with the provisions of the legislation in force.

4 Use

Before starting the coffee machine, carefully read chapter “1 Warnings” and paragraph “3.3 Before using for the first time”.

4.1 Switching the machine on

- Make sure that the drip tray (12) complete with cup grille (13) is fitted correctly at switch-on and before any dispensing.
- Lift the tank lid (2) and pour fresh water into the tank (3), taking care not to exceed the indicated MAX level, and then refit the lid (2).
- Switch the coffee machine on by pressing the ON/OFF key (5); the keys (27), (28) and (29) flash in sequence to indicate that it is reaching the correct temperature. The coffee machine is ready for use as soon as all the keys light continuously.

4.2 First use (Fig. A)

When using it for the first time, we recommend setting the water hardness as described in the “Setting the water hardness” paragraph.

Rinse the internal circuits before using it for the first time. Proceed as described below.

- Switch the machine on as described in paragraph “4.1 Switching the machine on”.
- Attach the filter holder (9) with non-pressurised double cup filter (19) to the dispensing unit (10).
- Place a container under the coffee dispensing spouts and press the key (28).
- Repeat this procedure 5 times.
- Place a container under the hot water/steam wand (11).
- Turn the steam lever (7) clockwise and dispense 100 ml of water; this takes about 20 seconds.
- Turn the steam lever (7) counter-clockwise back to the vertical position to end the operation.

We also recommend rinsing the internal circuits when the coffee machine has not been used for a long time.

4.3 Changing the dispensing program (Fig. A)

- The machine has two dispensing menus in memory: *White Menu* and *Blue Menu*.
  To switch between programs, press the key (26).
- In the *White Menu*, all the keys are lit white, while in the *Blue Menu*, the coffee dispensing keys are lit blue.

- For the specific functions of each menu, refer to section “3.1 Description of the controls”.

4.4 Preparing an espresso coffee (Fig. A, C, D, E)

To enjoy the coffee at its best, we recommend pre-heating the cup by rinsing it with hot water or dispensing hot water into the cup via the wand (11).

At every switch-on, we recommend rinsing the dispensing unit (10) and filter-holder (9) circuits by dispensing a double coffee without any coffee in the filter.

When using SMEG CGF03 coffee machines, we recommend selecting the “SUPERFINE” setting for non-pressurised filters (16), (17) and “FINE” for pressurised filters (18), (19).

- Check the water level in the tank (3) and add water if necessary, taking care not to exceed the MAX level.
- Select the right filter (16), (17), (18) or (19) for the type of dispensing required and insert it into the filter holder (9). For more details about the different filters provided, see paragraph “3 Description of the parts/accessories”.
- Distribute the ground coffee evenly inside the filter holder (9) and place the latter on a surface as shown in Fig. C. Press the coffee using the tamper (24) provided. To dose the coffee correctly in the filter and tamp it properly, the top edge (24A) of the tamper should be aligned with the top edge (9A) of the filter holder.

The two raised reference markers on the inside of the coffee filters are designed to indicate the ideal quantity of coffee. After tamping, check that the quantity of coffee is at the correct level.

- Attach the filter holder (9) to the dispensing unit (10) by turning it counter-clockwise to the clamped position.
- Place the cup or cups under the filter holder spout(s) (9).
- Select the desired beverage from the *White Menu* and press the corresponding key, (27) or (28). For more details on the *White Menu* functions, see paragraph “4.3 Changing the dispensing program”.
- When the set quantity is reached, dispensing will stop automatically. The pressure gauge (8) lets you check whether the coffee is dispensed perfectly as shown in Fig. E:

  E1. Correct Extraction
  The indicator is on the ‘Espresso’ segment: the coffee was extracted correctly.
  The coffee flows slowly but continuously, and extraction takes about 25–35 sec.

  E2. Under-extraction
  The indicator is below the ‘Espresso’ segment. The coffee is under-extracted.
  Possible causes:
  The coffee used is ground too coarsely, there is not enough ground coffee, or the tamping was not done with the right pressure.
  Solutions:
  Adjust the coffee grinding to be finer if using a coffee grinder, add more coffee or adjust the manual coffee tamping step.

  E3. Over-extraction
  The indicator is above the ‘Espresso’ segment. The coffee is over-extracted.
  Possible causes:
  The coffee used is ground too finely, there is too much ground coffee, or the tamping was not done with the right pressure.

Solutions:
Adjust the coffee grinding to be courser if using a coffee grinder, add less coffee or adjust the manual coffee tamping step.

To avoid spraying, do not remove the filter holder during dispensing, but wait a few seconds after dispensing has stopped.
BURNS HAZARD!

It is completely normal that the first coffees do not reach the right temperature if the machine has not been used for a long time (breaks of more than 30 minutes). Repeat the procedure described to obtain a hotter coffee.

- After dispensing, remove the filter holder by turning it clockwise and clean it.

Caution! If you want to remove the drip tray (12) after dispensing, wait about 30 seconds before doing so.

After about 10 minutes of inactivity, the machine enters the Energy Saving function. The standby time can be changed as described in the “Setting the auto-off time” paragraph.

4.5 Preparing a Cold Brew (Fig. F)

- Check the water level in the tank (3) and add water if necessary, taking care not to exceed the MAX level.

To get the best flavour from Cold Brew dispensing, fill the tank (3) with fresh water.

When using SMEG CGF03 coffee machines, we recommend setting the machine to “MEDIUM”, between level 10 and 12.

- Insert the non-pressurised filter (17) into the filter holder (9).
- Distribute the ground coffee evenly inside the filter holder (9) and place the latter on a surface as shown in Fig. C. Press the coffee using the tamper (24) provided. To dose the coffee correctly in the filter and tamp it properly, the top edge (24A) of the tamper should be aligned with the top edge (9A) of the filter holder.
- Attach the filter holder (9) to the dispensing unit (10) by turning it counter-clockwise to the clamped position.
- Pour 1 or 2 ice cubes into the glass (Fig. F).
- Press the key (26) to switch to the ***Blue Menu***.
- Select the desired beverage from the ***Blue Menu*** and press the key, (27) or (28), as you prefer. For more details on the ***Blue Menu*** functions, see paragraph “4.3 Changing the dispensing program”.

During this preparation, if correctly ground coffee is used, the pressure gauge (8) remains stationary.

When making a Cold Brew immediately after dispensing a standard Espresso, always cool the dispensing unit (10). To do so, attach the empty filter holder (9) to the unit and press the key (28) from the *Blue Menu* before dispensing.

4.6 Dispensing steam and preparing a cappuccino (Fig. G)

- Make sure that the drip tray (12) is fitted correctly.
- Fill a milk jug with 100 ml of cold milk for each cappuccino you want to prepare.
- Press the key (29); the key starts flashing to indicate that the machine is reaching the correct temperature for dispensing steam. Wait for the key (29) to light continuously, which indicates that the correct steam dispensing temperature has been reached.
- Place the milk jug containing the milk under the steam wand (11) with the tip of the wand touching the milk.
- Turn the steam lever (7) counter-clockwise to the " " icon to dispense steam.
- Once the optimum foam level and temperature have been reached, stop dispensing by turning the steam lever (7) back to the vertical position.
- Pour the frothy milk into the cups containing the espresso prepared previously.

The milk froth quality may be affected by the type of milk used and the dexterity of the user. To obtain a good cappuccino, we recommend using semi-skimmed or full-fat milk at fridge temperature (about 5°C/41°F).

- To make several cappuccinos, first prepare all the coffees and then froth the milk for all of them together.
- After heating the milk, dispense steam for a few seconds.

- Clean the steam wand (11) whenever it is used to avoid depositing milk residues or clogging it. For information on cleaning the steam wand, see paragraph "6 Cleaning and maintenance".

- After dispensing steam, the key (29) will remain on. You can then dispense more steam or, if you want to finish the steam dispensing procedure, press the key (29); the machine will automatically drain water into the drip tray (12) to cool the heating element so that you can prepare a coffee immediately after frothing the milk. Make sure that the drip tray (12) is fitted correctly.

Caution! The machine will automatically drain the water to cool the heating element after the steam function has not been used for 120 seconds.

Caution! If you want to remove the drip tray (12) after dispensing, wait about 30 seconds before doing so.

Caution! Do not activate the hot water " " function once the machine has finished dispensing the steam, or during the cooling phase, as this could cause steam to be emitted by the steam wand (11).

4.7 Dispensing hot water (Fig. H)

- Place a container under the steam wand (11).
- Turn the steam lever (7) clockwise to the "💧" icon to dispense hot water.
- Stop dispensing by returning the lever (7) to the vertical position.

4.8 Setting the amount of coffee

The amount of coffee dispensed can be customised for each function type.
To change the amount of coffee dispensed by the machine:

- Place a small or large cup under the dispenser (10).
- Press key (27) or (28) for at least 3 seconds, depending on the desired type of drink. If the beeps are activated, a double beep indicates that the customisation procedure has been initiated. The selected key starts to flash.
- When the desired amount has been reached, press the key again to stop dispensing.
- The length has been set and is stored permanently.

To reset to the factory settings, press and hold the keys (28) and (26) simultaneously for at least 10 seconds. All the keys flash simultaneously and the machine beeps once to indicate that the factory settings have been restored, if the beeps are activated.

5 Machine settings

- The programming menu can be used to set:
  - Coffee temperature.
  - Water hardness.
  - Auto-off time (Standby).
- To access the programming menu, press the key (26) for 5 seconds. All the keys flash simultaneously.
- To set the coffee temperature, press the key (27).
- To set the water hardness, press the key (28).
- To set the auto-off time, press the key (29).
- Set the machine according to your needs.
- If no keys are pressed for 60 seconds, the machine reverts to the main menu.

Setting the coffee temperature

- Access the programming menu.
- Press the key (27) to set the coffee temperature.
- The key (27) flashes 3 times, after which the indicator lights show the current setting:

Indicator lights	Setting the temperature
	Low
	Optimal
	High

- Press the key corresponding to the desired temperature: low (27), optimal (28) or high (29).
- The selected key flashes to indicate that the selection has been stored, and a single beep sounds, if the beeps are activated.

Setting the water hardness

- The machine is pre-set to “Hard Water Level” at the factory. The machine can be programmed to the actual mains water hardness so that descaling is performed less frequently.
- If you do not know the water hardness, use the test strip provided (25) and follow the instructions below.
- Remove the reactive strip supplied (25) from its packaging.
- Fully immerse the strip (25) in a glass of water for about one second.
- Remove the strip from the water and shake it slightly. Read the results after about one minute.
  If 5 blue stripes appear on the strip, select the “soft water” setting.
  If 1 or 2 pink stripes appear on the strip, select the “medium water” setting.
  If 3, 4 or 5 pink stripes appear on the strip, select the “hard water” setting.
- Access the programming menu.
- Press the key (28) to set the water hardness.
- The key (28) flashes 3 times, after which the indicator lights show the current setting:

Indicator lights	Water setting
	Soft
	Medium
	Hard

- Press the key that corresponds to the water hardness:

Soft	Medium	Hard
<10°dH	10°dH – 20°dH	>20°dH
<18°fH	18°fH – 36°fH	>36°fH
<180 mg/l CaCo3	180–300 mg/l CaCo3	360 mg/l CaCo3

- The selected key flashes to indicate that the selection has been stored, and a single beep sounds if beeps are enabled.

To prolong machine operation and preserve the aroma and flavour of the coffee, we recommend using the Smeg Softener Filter (optional, not supplied). For information on installation and operation, follow the instructions that accompany the accessory. Once installed, set the water hardness to ‘Soft’, following the instructions in the previous paragraph.

Setting the auto-off time
To save energy, the coffee machine has an auto-off function that intervenes when it is not used for a long time.
To turn the appliance back on, press any key on the control panel.
To set the auto-off time:
- Access the programming menu.
- Press the key (29) to set the auto-off time.
- The key (29) flashes 3 times, after which the indicator lights show the current setting:

Indicator lights	Time setting
	10 minutes
	20 minutes
	30 minutes

- Press the key that corresponds to the time you want to set, choosing from 10 minutes (27), 20 minutes (28) or 30 minutes (29).
- The selected key flashes to indicate that the selection has been stored, and a single beep sounds if beeps are enabled.

Enabling/disabling beeps
- Beeps are disabled on the machine by default.
- Beeps can be disabled/enabled by pressing and holding the keys (26) and (27) for 5 seconds;
- The key (27) flashes three times to indicate that the setting has been stored.

Resetting to the factory settings
To reset to the factory settings:
- Press and hold the keys (28) and (26) simultaneously for at least 10 seconds.
- All the keys flash together once to indicate that the original settings have been restored.

6 Cleaning and maintenance (Fig. K)

To make all cleaning and maintenance procedures easier, as well as the simple operating procedures described so far, you can access the My Smeg Assistant portal: for quick access, remove the drip tray (12) and scan the QR code on the base of the product as shown in “Fig. K”.

6.1 Warnings

Electrocution hazard.
- Remove the plug from the power socket before cleaning the coffee machine.
- Do not immerse the coffee machine in water or other liquids.
- Allow the coffee machine to cool down before cleaning.

Risk of damage to the surfaces.
- Do not use steam jets to clean the coffee machine.
- Do not use cleaning products containing chlorine, ammonia or bleach on parts with metal surface finishes (e.g. anodized nickel-plated or chrome plating).
- Do not use abrasive or corrosive detergents (e.g. powder products, stain removers and metal scourers).
- Do not use rough or abrasive materials or sharp metal scrapers.

6.2 Cleaning the machine body

To keep the external surfaces in good condition, clean them regularly after use, when they have cooled down. Clean with a soft, damp cloth.

Do not use cleaning products containing chlorine, ammonia, bleach or alcohol.

Do not use abrasive or corrosive detergents (e.g. powder products, stain removers and metal scourers).

6.3 General cleaning (Fig. A)

To ensure the machine operates well and provides good quality beverages, we recommend a few simple daily cleaning procedures, such as: cleaning the filter holder (9) and filter inside it (16), (17), (18) or (19), the drip tray (12) and water tank (3).

Cleaning the filter holder (9) and filters (16, 17, 18, 19)

- Remove the filter (16), (17), (18) or (19) from the filter holder (9) and rinse it under running water. If the holes are clogged, clean them with the needle (23) provided.
- Dry the components thoroughly and refit them.

Cleaning the drip tray (12)

The drip tray (12) has a red float (14), which protrudes from the cup grille (13) when the liquid exceeds the maximum level.

- Remove the cup grille (13) followed by the tray (12) to empty it.
- Empty it and rinse it under running water, use mild washing up liquid if necessary.
- Dry the components and refit them in the machine.

We recommend cleaning the drip tray (12) after each use of the machine.

Cleaning the water tank (3)

- Remove the tank lid (2) and remove the tank (3) from the machine. Clean the water tank (3) about once a month with a damp cloth and mild detergent, dry the outside and then refit it.

Cleaning the steam wand (11) (Fig. H)

Clean the steam wand (11) immediately after use.

- Point the tip of the steam wand at the hole in the cup grille, turn the lever (7) to the "💧" icon for a few seconds to expel any milk left inside, and then return it to the vertical position.
- Dry the steam wand (11) using a damp cloth.

Use the appropriate silicone grip to make cleaning the wand easier.
BURNS HAZARD!

- Check that the steam outlet hole is not blocked. If there are any deposits, clean the steam outlet hole with the needle (22) provided.

Cleaning the dispensing unit (10) (Fig. I)

Stay close to the machine for the entire duration of the dispensing unit (10) cleaning cycle as user intervention may be required. The procedure takes 10 minutes in total.

- Insert the non-pressurised filter for double coffee (19) into the filter holder (9).

- Insert the cleaning disk (20) provided and a detergent capsule into the filter (19).

Use detergent capsules for household coffee machines, which are commonly available on the market.

- Attach the filter holder (9) to the dispensing unit (10) and empty the drip tray (12).
- Fill the tank (3) up to the MAX level with fresh water.
- Press and hold the keys (27) and (28) for 5 seconds.
- The machine will perform pulsed dispensing to clean the dispensing unit (10). The procedure takes a total of about 10 minutes, divided into two cleaning cycles.
- At the end of the first cycle, the keys (27) and (28) will flash to indicate that the drip tray (12) must be emptied and then refitted.
- After emptying and refitting the drip tray (12), press the keys (27) and (28) again for 5 seconds to start the second cycle.
- At the end of the procedure, all the keys will light continuously, and the machine will beep twice, if beeps are enabled.
- Remove the filter-holder (9) and check that the detergent has dissolved completely. If not, repeat the procedure.
- Afterwards, remove the filter holder (9) and the cleaning disk (20) inside it.
- Before dispensing a coffee, attach the filter holder (9) again to the dispensing unit (10), complete with the filter (19), and press the key (28) to rinse the circuit.

6.4 Descaling (Fig. J)

Before performing the descaling cycle, remove any water softener filters from the tank (3).

Stay close to the machine for the entire duration of the descaling cycle as user intervention may be required, e.g. to refill the tank. The descaling and rinsing cycle lasts 20 minutes in total.

The coffee machine indicates when a descaling cycle is required based on the set water hardness (for information on setting the water hardness, see the “Setting the water hardness” paragraph). The coffee machine must be descaled when the key (29) flashes orange.
The warning will be displayed whenever the machine exits the standby state, until the descaling procedure is performed.
However, coffee, steam/hot water can still be dispensed.
To perform a descaling cycle, proceed as follows:

- Empty the water tank (3) completely and remove the softening filter (if any).
- Fill the water tank (3) up to the MAX level with a solution of water and descaling agent in the doses recommended by the manufacturer.
- Remove the filter holder (9) and place a container under the dispenser (10) and another under the steam wand (11).
- As soon as the machine is ready, press and hold the key (29) for 10 seconds.
- Turn the steam lever (7) counter-clockwise to the “ ” steam strength position.
- Press the key (29) to start descaling; the key (29) starts flashing.
- The descaling cycle automatically

performs a series of rinses at intervals to remove the limescale from inside the coffee machine, until the tank (3) is empty.

- The descaling cycle stops and the white indicator light (29) turns on.
- Remove the water tank (3), empty it and rinse it thoroughly under running water to remove any traces of descaler.
- Fill the tank (3) up to the maximum level and insert it into its housing.
- Place an empty container under the steam wand (11), another empty container under the dispensing unit (10), and check that the steam lever (7) is set to the "" icon.
- Press the steam key (29) again to start the rinsing cycle.
- When the tank (3) is empty, it means that the rinsing cycle has finished and the machine returns to the ready state.
- Turn the steam lever (7) back to the vertical position.

Personal injury hazard.

- The descaler contains acids that can irritate the skin and eyes.
- Scrupulously follow the manufacturer's instructions and safety warnings on the packet in the event of contact with skin or eyes.
- Use descalers recommended by Smeg to prevent damage to the coffee machine.

Troubleshooting

Problem	Possible causes	Solution
The appliance does not work.	Plug not inserted.	Insert the plug.
	Possible fault.	Unplug the coffee machine and contact an authorised after-sales centre.
No coffee is dispensed from the spouts.	No water in the tank (3). The keys (27), (28) and (29) flash fast.	Fill the tank (3).
	The holes in the filter (16), (17), (18) or (19) are blocked.	Clean the filter (16), (17), (18) or (19) with a brush or the cleaning pin (23) provided.
	The tank (3) is not inserted correctly or is empty.	Insert the tank (3) correctly and make sure it contains water.
	Lime scale build-up.	Perform a descaling cycle.
	The pressure gauge (8) indicates overpressure.	Make the coffee again with less or coarser powder.
	The ground coffee is too fine.	Adjust the grinding to a coarser level.
	Excessive tamping.	Tamp the coffee less.
	There is too much coffee.	Reduce the amount of coffee.
	The dispensing unit (10) is clogged or dirty.	Perform the dispensing unit (10) cleaning cycle as described in “Cleaning the dispensing unit” under paragraph “6 General cleaning”.
The coffee is light in colour and flows out of the spout quickly.	The ground coffee has not been tamped enough.	Tamp the coffee more.
	There is insufficient ground coffee.	Increase the amount.
	The ground coffee is too coarse.	Use only ground coffee for espresso coffee machines.
	The ground coffee quality is wrong.	Change the ground coffee type.

Troubleshooting

EN

Problem	Possible causes	Solution
The coffee is dark in colour and flows out of the spout slowly.	The ground coffee has been tamped too much.	Tamp the coffee less.
	There is too much ground coffee.	Reduce the amount.
	The dispensing unit (10) or filter (16), (17), (18) or (19) are blocked.	Clean the dispensing unit (10) or filter (16), (17), (18) or (19).
	The ground coffee is too fine.	Use only ground coffee for espresso coffee machines.
	Lime scale build-up.	Perform a descaling cycle.
The coffee only flows from one of the two spouts.	The coffee is not tamped properly.	Take care to tamp horizontally.
	The filter holder (9) is dirty.	Clean the filter holder (9) and the filter (16), (17), (18) or (19) in it.
The spouts are clogged.	The spouts were not cleaned after dispensing.	Clean the nozzles thoroughly.
The coffee is not hot.	The machine was not used for a long time.	Increase the coffee temperature from the programming menu following the instructions in the “Setting the coffee temperature” paragraph. Dispense hot water into the same cup in which the coffee will be prepared in order to heat it.
	The temperature is set too low.	Access the programming menu and change the extraction temperature as described in “Setting the coffee temperature” under paragraph “5 Machine settings”.
	The cups were not preheated.	Heat the cups by rinsing them with hot water (Note: the hot water function can be used).

Troubleshooting

Problem	Possible causes	Solution
The milk does not have good foam or is not frothy enough.	The steam wand (11) is dirty.	Clean the steam wand (11) thoroughly by removing the steel nozzle and following the instructions in the manual. Note: the froth quality depends on the type of milk used, its temperature and the technique used/manual dexterity.
	The steam function was not activated correctly.	Follow the instructions in the “Dispensing steam” paragraph.
The machine does not dispense steam.	The key (29) flashes. The machine has not reached the steam dispensing temperature.	Wait for the temperature to be reached.
	Lime scale build-up.	Perform a descaling cycle.
	No water in the tank (3).	Fill the tank (3).
	The steam lever (7) is not correctly set to the steam icon “ ”.	Set the steam lever (7) to the steam icon “ ”.
	Possible fault.	Contact an authorised after-sales centre.
The machine leaks water from the base.	The drip tray (12) is not inserted properly.	Check and insert it properly.
	The drip tray (12) is full.	Empty the drip tray (12).
	The water tank (3) is not inserted properly.	Insert the tank (3) properly into its housing.
The steam wand (7) drips during dispensing.	Lime scale build-up.	Perform a descaling cycle.

Troubleshooting

Problem	Possible causes	Solution
Coffee starts dispensing during pre-brewing.	There is not enough coffee in the filter holder (9) or it is too fine.	Adjust the amount and grinding.
	The coffee has not been tamped enough.	Tamp the coffee more.
The coffee drips from the filter holder (9) and not from the spouts.	The filter holder (9) is not attached properly or is dirty.	Attach the filter holder (9) and turn it fully. Clean the filter holder (9).
	The dispensing unit (10) gasket is worn.	Have it replaced at an authorised after-sales centre.
	The spout holes are blocked.	Clean the spout holes.
	The filter has been overfilled.	Put the correct amount in the filter using the measuring cup provided.
The filter holder (9) will not attach to the coffee machine.	The filter has been overfilled.	Check the amount of coffee dosed.
A descaling cycle was performed, but the machine does not work.	The cycle was not completed.	Make sure the descaling cycle completes and then rinse as described in paragraph “6.4 Descaling”.
	The water was not topped up to the MAX level indicated on the back of the tank (3) during the descaling cycle.	Add water to the tank (3) to complete the cycle.
The coffee machine does not work and all the indicator lights flash.	Possible fault.	Unplug the coffee machine and contact an authorised after-sales centre.
The keys (27), (28) and (29) flash in sequence.	The machine is reaching the correct temperature for dispensing coffee.	Wait for the keys (27), (28) and (29) to light continuously, and then select the desired beverage.

Troubleshooting

Problem	Possible causes	Solution
The keys (27), (28) and (29) flash fast.	There is no water in the tank or no tank (3).	Make sure the tank (3) is fitted correctly and that it contains enough water.
	Overpressure alarm.	Wait for the machine to empty automatically into the drip tray (12).
	During steam operation, the steam lever (7) is operated before pressing the steam key (29).	Press the steam key (29).
	During steam operation, the steam lever (7) is operated before the machine has reached the preset steam temperature.	Wait for the machine to reach the temperature, as indicated by the keys (27), (28) and (29) remaining lit continuously.
	The wand (11) is used to dispense steam or hot water for longer than 120 seconds.	Return the steam lever (7) to the vertical position to end the operation.
The key (29) is lit orange.	A descaling cycle is required.	Perform descaling as described in paragraph “6.4 Descaling”.
The key (29) flashes orange quickly.	The water in the tank (3) has finished before the end of the descaling/cleaning procedure.	Add water to the tank (3) and complete the descaling/cleaning procedure as described in the corresponding paragraphs.

Contact your local technical after-sales service if the problem is not solved or if there are other types of faults.