RV5
Power Hub

User Manual V1.0

Important instructions

- Read and understand this manual before use and keep it handy for future reference.



Tips !

1. Before first use, make sure the connected batteries are in good condition and functioning properly.
2. Only connect devices that meet the voltage requirements for each port.
3. Do not connect the unit's AC output to the grid.
4. Ensure proper ventilation if the unit is placed in a confined space.
5. Do not remove the wiring covers or touch exposed terminals while the unit is in use.

Legal Information

Copyright © 2025 Shenzhen PowerOak Newener Co., Ltd. All Rights Reserved.
No reproduction or transmission of any part of this document is permitted without the prior written consent of Shenzhen PowerOak Newener Co., Ltd.

Notice

BLUETTI's products and services are subject to the terms and conditions agreed upon during purchase. Some aspects described in this manual may not be available under your purchase contract. Unless otherwise specified in the contract, BLUETTI makes no express or implied representations or warranties regarding the contents of this manual.

The contents of this manual are subject to change without notice. Please obtain the latest version from BLUETTI official website.

If you have any questions or concerns about this manual, please contact BLUETTI support for further assistance.

Shenzhen PowerOak Newener Co., Ltd.
19F, Block A, Kaidaer Bldg., No. 168 Tong Sha Rd, Shenzhen, China
Website: https://www.bluettipower.com/

Contents

About the Manual

1. Safety Instructions ---- 07

1.1 General Instructions ---- 07

1.2 Installation Safety ---- 10

1.3 Battery Safety ---- 11

1.4 Electrical Safety ---- 12

1.5 Handling Requirements ---- 13

2. What's in the Box ---- 14

3. Get to Know Your RV5 ---- 15

3.1 System Overview ---- 15

3.2 RV5 Introduction ---- 18

4. Install & Wire Your RV5 ---- 21

4.1 Required Tools ---- 21

4.2 Mount the RV5 ---- 22

4.3 Wiring and Fuses ---- 27

4.4 Wiring Instructions Overview ---- 28

4.5 AC Input Wiring ---- 30

4.6 AC Output Wiring ---- 33

4.7 Battery Wiring ---- 34

4.8 DC Input Wiring ---- 38

4.9 DC Output Wiring ---- 41

4.10 Grounding ---- 42

4.11 CAN Communication Wiring & Configuration ---- 43

5. Use Your RV5 ---- 45
5.1 Power On/Off ---- 45
5.2 Initial Setup ---- 47
5.3 Configure Your RV5 ---- 47
5.4 Button Control ---- 48
6. Maintenance and Care ---- 49
7. Specifications ---- 49
8. Troubleshooting ---- 51
Appendix 1 ---- 54
Appendix 2 ---- 55
Appendix 3 ---- 56
Compliance ---- 57
1. Sécurité Instructions ---- 62
1.1 Général Instructions ---- 62
1.2 Installation Safety ---- 65
1.3 Batterie Sécurité ---- 66
1.4 Électrique Sécurité ---- 68
1.5 Manutention Exigences ---- 69
Conformité ---- 70

About the Manual

Purpose

This user manual describes the installation, electrical connection, commissioning, maintenance and troubleshooting of RV5. Please read and understand all instructions in this manual before use.

Symbol Conventions

This manual uses the following symbols to highlight important information:

	**Danger** It indicates a hazardous situation which, if not avoided, will result in death or serious injury.
	**Warning** It indicates a hazardous situation which, if not avoided, could result in death or serious injury.
	**Caution** It indicates a hazardous situation which, if not avoided, could result in minor or moderate injury.
	**Attention** It indicates a potentially hazardous situation which, if not avoided, could cause substantial damage to property and the environment.
	**Note** It contains important additional information as well as useful tips for safe, efficient and hassle-free operation of the RV5.

1. Safety Instructions

IMPORTANT SAFETY INSTRUCTIONS

SAVE THESE INSTRUCTIONS – This manual contains important safety and operating instructions for RV5.

1.1 General Instructions

1.1.1 Statement

Before installing, operating, or maintaining this unit, please read this manual thoroughly and follow all safety precautions indicated on the unit and in this manual.

Look for and follow all "Note", "Attention", "Caution", "Warning", and "Danger" statements in this manual. The safety guidelines provided herein do not cover all possible safety consider ations. Please follow all relevant international, national, or regional standards, as well as industry practices. Our company shall not be liable for damages resulting from non-compli ance with these safety requirements or standards.

For issues or operations not covered in this manual, please contact BLUETTI support, otherwise we are not responsible for any damage or injury caused by unauthorized operations.

Always consider the actual on-site conditions when using the unit. Use it only in environments that meet the requirements outlined in this manual. Failure to do so may cause equipment malfunctions or damage, which are not covered by the warranty. Our company is not liable for any injuries or property damage caused by improper use.

Thus, for proper installation and use of this unit, it's crucial to adhere to the following guide lines:

1. Always operate or store the unit in the conditions specified in this manual.

2. CAUTION – To reduce risk of injury, charge only $LiFePO_4$ or lead-acid batteries type rechargeable batteries . Other types of batteries may burst causing personal injury and damage.

3. Do not expose the unit to rain or snow.

4. Use of an attachment not recommended or sold by us may result in a risk of fire, electric shock, or injury to persons.

5. Do not disassemble the RV5; take it to a qualified serviceman when service or repair is required. Incorrect reassembly may result in a risk of electric shock or fire.

6. To reduce risk of electric shock, unplug the RV5 from the outlet before attempting any maintenance or cleaning. Turning off controls will not eliminate this risk.

7. The installation and ambient conditions must comply with the regulations in the relevant international, national or regional standards.

8. Avoid unauthorized disassembly, equipment alterations, or software code modifications.

9. Our company shall also not be liable for the following situations or their consequences:

- Damage caused by force majeure events such as earthquakes, fires, storms, floods, or

mudslides.

- Transport-related damages during customer handling.
- Equipment damage due to improper storage conditions as outlined in the manual.
- Hardware damage or data loss resulting from customer negligence, improper use, or intentional damage.
- System damage caused by third parties or customers, including improper handling or installation not in line with the manual's instructions.
- Damage from adjustments, modifications, or removal of labels not authorized in the manual.
- Use of the unit in environments not compliant with relevant international, national, or regional standards.
- Installation or operation by unauthorized personnel.
- Use of customer-provided materials or tools that do not meet local legal requirements or relevant standards.



Attention

Follow these guidelines for proper use.

- This unit is not intended for use with devices that have high-performance requirements for UPS (Uninterruptible Power Supply), including but not limited to data servers, workstations, medical equipment, and similar devices. Our company shall not be liable for any data loss or equipment damage resulting from the violation of this requirement.

1.1.2 General Requirements



Danger

Follow these guidelines for proper use.

1. Do not install, use, or maintain the unit in adverse weather conditions such as lightning, rain, snow, and strong breezes (including handling, operating, plugging and unplugging signal connections for outdoor facilities, working at heights, and outdoor installations).
2. Keep the unit away from heat sources or high temperatures, and do not expose it to direct sunlight.
3. Do not clean the unit with water.
4. Regularly inspect the unit and its accessories for signs of damage or deterioration.
5. Use a tester to check for dangerous voltage before touching any conductor or terminal.
6. In the event of a fire, prioritize personal safety. If safe to do so, immediately disconnect power

and use a CO2, FM-200, or ABC dry powder fire extinguisher.
7. If a fire occurs, EVACUATE the affected area promptly. Activate the nearest FIRE ALARM system and CONTACT local emergency services.
8. Do not store flammable or explosive materials near the unit.
9. Maintain a well-ventilated and spacious installation area.
10. Do not block or cover the unit's openings and vents.
11. Use the unit only for its intended purpose and refrain from stacking objects on or near it during storage or use.
12. Do not move the unit during operation, as vibrations and shocks from movement may cause damage.
13. In case of malfunction, immediately power the unit off and contact BLUETTI support or your local BLUETTI dealer if the manual does not adequately explain the issue.
14. Mount the unit securely on a metal bracket, wall, or stable platform to prevent it from falling. Avoid placing it on inclined surfaces.
15. Keep the unit out of the reach of children and pets.
16. Do not install the unit where it may be exposed to water or submerged.
17. Do not touch the unit when it's running, as the shell may become hot and pose a risk of burns.

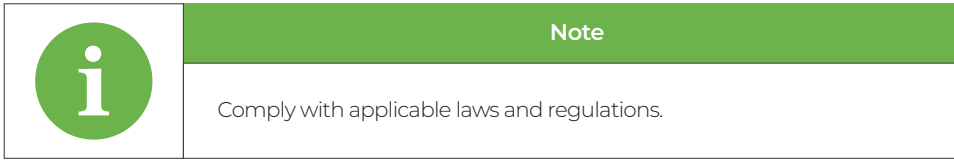

- When handling, installing, wiring, or maintaining this product, comply with the country or region's legal regulations and standards.
- Use materials and tools that meet applicable legal requirements and standards.
- Understand the operational principles and standards relevant to the energy storage system in the location.

1.2 Installation Safety



Danger

Follow these guidelines for proper use.

1. Avoid working with live electrical components.
2. Before installation, double check the unit for any signs of damage or defects to minimize potential risks.
3. Make sure the unit and all associated switches are turned off (not in sleep mode) to prevent electric shock.
4. Do not touch any terminal while the unit is running, as it may pose a risk of electric shock.
5. Use a tester to check for dangerous voltage before touching any conductor or terminal.

1.2.1 General Requirements

1. After installation, remove the idle package materials from the site such as cardboard, foam, plastic, nylon ties, etc.
2. Keep people other than the installers away from the site.
3. Handle the unit and accessories carefully during transport; use original or protective packaging.
4. Seal wiring ports securely with fireproof and waterproof materials.
5. Do not alter or cover equipment markings or nameplates.
6. Check and make sure all safe guards, including screws and waterproof rings, are in place and properly tightened.
7. Clean the unit and accessories with a soft cloth; avoid water or harsh chemicals.
8. Do not make any changes to the unit's structure, installation sequence, or any other aspects without permission.

1.2.2 Drilling Requirements

When drilling holes in the wall or on the ground, follow these safety measures:

1. Wear goggles and protective gloves at all times.
2. Shield the unit to prevent debris from falling into it, and remove all debris after drilling.
3. Drill holes on the unit is forbidden as it may damage the the unit's electromagnetic shielding performance. The metal shavings may cause short circuits on the circuit board.
4. Make sure to check for any embedded pipes or cables before drilling to prevent short circuits or other hazards.

1.2.3 Location Requirements

1. Locate RV5 away from battery in a separate, well ventilated compartment.
2. Never place device directly above battery; gases from battery will corrode and damage device.

3. Never allow battery acid to drip on device when reading gravity or filling battery.
4. Do not operate device in a closed-in area or restrict ventilation in any way.

1.3 Battery Safety

1.3.1 Disclaimer

Our company shall not be liable for equipment malfunctions, component damage, personal injury, property loss, or other issues caused by:

- Using damaged or modified battery packs or devices.
- Using battery types not specified in the manual or batteries with unsupported voltage.
- Failing to follow the battery user manual for proper use and handling.
- Incorrect battery operational settings.
- Short circuits, damage, drops, or leaks due to improper use or connections.

1.3.2 General Requirements

1. WARNING – RISK OF EXPLOSIVE GASES.
2. CAUTION – WORKING IN VICINITY OF A LEAD-ACID BATTERY IS DANGEROUS. BATTERIES GENERATE EXPLOSIVE GASES DURING NORMAL BATTERY OPERATION. FOR THIS REASON, IT IS OF UTMOST IMPORTANCE THAT EACH TIME BEFORE SERVICING THE UNIT IN THE VICINITY OF THE BATTERY, YOU READ THIS MANUAL AND FOLLOW THE INSTRUCTIONS EXACTLY.
3. To reduce risk of battery explosion, follow these instructions and those published by battery manufacturer and manufacturer of any unit you intend to use in vicinity of battery. Review cautionary marking on these products and on engine.
4. This unit is intended to recharge batteries. The battery that is connected to this product is only suitable if it complies with the given battery standard for that battery type and is provided with a battery management system that will monitor and control the electrical and thermal health of the battery during charging. When installing this device, the battery is to be verified as in compliance with the applicable battery standard.
5. CAUTION – It's recommended to use battery packs provided by BLUETTI. Unverified, damaged, or modified batteries may pose fire, explosion, or injury risks. If using a third-party battery, follow its user manual for proper use and maintenance.
6. If the battery has no built-in protection features, install a properly rated fuse or DC circuit breaker at the terminal.
7. Use short battery cables to minimize heat buildup and improve performance.
8. WARNING –Never reverse the battery's positive and negative terminals. Damage caused by incorrect connection is not covered under warranty.
9. For marine use, pair this unit with Epad or any compatible voltage and current monitoring device to track the charging process.

1.3.3 Personal Precautions

1. Someone should be within range of your voice or close enough to come to your aid when you work near a lead-acid battery.
2. Have plenty of fresh water and soap nearby in case battery acid contacts skin, clothing, or eyes.
3. Wear complete eye protection and clothing protection. Avoid touching eyes while working near battery.
4. If battery acid contacts skin or clothing, wash immediately with soap and water. If acid enters eye, immediately flood eye with running cold water for at least 10 min and get medical attention immediately.
5. NEVER smoke or allow a spark or flame in vicinity of battery or engine.
6. Be extra cautious to reduce risk of dropping a metal tool onto battery. It might spark or short-circuit battery or other electrical part that may cause explosion.
7. Remove personal metal items such as rings, bracelets, necklaces, and watches when working with a lead-acid battery. A lead-acid battery can produce a short-circuit current high enough to weld a ring or the like to metal, causing a severe burn.
8. NEVER charge a frozen battery.
9. If necessary to remove battery from vessel, always remove grounded terminal from battery first. Make sure all accessories in the vessels are off, so as not to cause an arc.
10. Be sure area around battery is well ventilated.
11. Clean battery terminals. Be careful to keep corrosion from coming in contact with eyes.
12. Study all battery manufacturer's specific precautions such as removing or not removing cell caps while charging and recommended rates of charge.
13. Add distilled water in each cell until battery acid reaches level specified by battery manufacturer. This helps purge excessive gas from cells. Do not overfill. For a battery without cell caps, carefully follow manufacturer's recharging instructions.

1.3.4 DC Connection Precautions

1. Connect and disconnect battery connections only after setting any device switches to off position and removing AC cord from electric outlet or opening AC disconnect.
2. EXTERNAL CONNECTIONS TO CHARGER SHALL COMPLY WITH THE UNITED STATES COAST GUARD ELECTRICAL REGULATIONS (33CFR183, SUB PART I).

1.4 Electrical Safety

1.4.1 General Requirements

1. Ensure all electrical connections comply with national/regional electrical standards.
2. User-provided cables should meet local legal requirements.
3. Use specialized insulated tools for electrical work.

1.4.2 Grounding Requirements

1. Before operating the unit, always confirm that it is properly grounded to reduce the risk of electric shock.
2. Take care not to damage the grounding conductor.
3. Connections to unit should comply with all local codes and ordinances.
4. According to IEC62109-1 guidelines, if the ground wire is damaged or disconnected, connect a protective ground wire to ensure safe use of the unit. Ensure the ground wire meets at least one of these criteria:

a. Use a single-core outdoor copper cable with a conductor cross-sectional area of ≥10 mm^2 if the PE terminal in the AC connector is not connected.

b. Use cables with the same wire diameter as the AC output cables, grounding both the PE terminal in the AC connector and the chassis grounding screw separately.

1.4.3 Wiring Requirements

1. Keep cables at least 1.18in (30mm) away from heat sources and devices that emit heat, as high temperatures can cause insulation to age or become damaged.
2. Bundle cables of similar types together to reduce electromagnetic interference. Keep different types of cables at least 1.18in (30mm) apart and avoid twisting or crossing them.
3. All cable must be securely connected, well-insulated, and of suitable specifications.
4. Take necessary measures to protect cables when passing through pipes or holes.
5. In cold temperatures, severe impacts or vibrations can cause the plastic coating of cables to become brittle and crack. To ensure safe installation:

a. Lay and install all cables at temperatures above 0°C (32°F). Handle cables with care, especially when working in cold environments.

b. If cables have been stored in temperatures below 0°C (32°F), store them at room temperature for at least 24 hours before installation.

1.5 Handling Requirements

Table 1-1 Recommended Number of People Based on the Weight of Product

Weight	Number of People
<18kg (39.7lbs)	1
18kg-32kg (39.7lbs-70.5lbs)	2
32kg-55kg (70.5lbs-121.3lbs)	3
>55kg (121.3lbs)	4 or a cart

2. What's in the Box

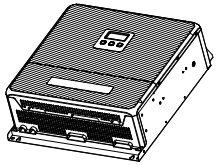

RV5
Power Hub



User Manual & Warranty Card

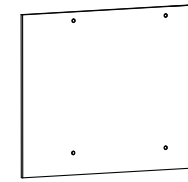

Drilling Template

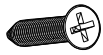

M8 Wood Screw ×8

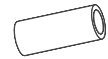

Anchor x8

The following accessories are not included. You can purchase optional accessories at https://www.bluettipower.com/

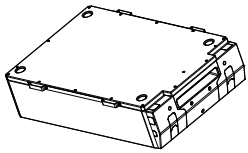

B4810
LiFePO4 Battery Unit

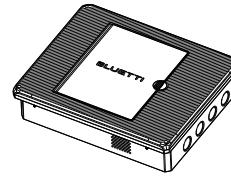

Epanel
Smart Distribution Panel

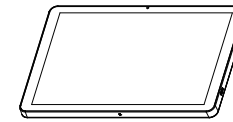

Epad
Central Control Screen

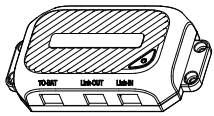

Edock
Battery Communication
Interface Box

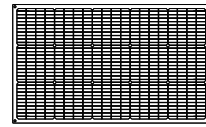

PV100 FX
Solar Panel



Waterproof Cover

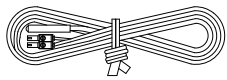

Temperature Sensor Cable

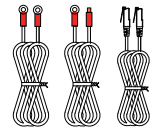

Cable Kit

3. Get to Know Your RV5

3.1 RV5 System

3.1.1 Introduction

The RV5 System is a complete energy solution designed for RVs, boats, and off-grid power setups. At its core, the RV5 5-in-1 power hub integrates seamlessly with the B4810 battery, Epad control pad, Epanel distribution panel, and PV100 FX solar panel, providing efficient management and monitoring of both DC and AC power.

The system is also compatible with BLUETTI battery packs like B1210, B1228, and the B300 series, as well as lead-acid and non-communication lithium batteries. With support for solar panels with an open-circuit voltage of 12V-50V, the RV5 system delivers flexible, reliable power wherever you go.

Component	Description
RV5	**5-in-1 Power Hub:** Integrated DC and AC power management system featuring solar MPPT charging, vehicle charging, AC inverter, battery charging, and a 48V DC-DC step-down module.
B4810	Battery Module (48V, 5120Wh)
Epad	**Energy Controller:** Centralized system management with RV-C and NEMA2000 protocol support, featuring liquid level and temperature sensors, digital I/O, and multiple physical interfaces.
Epanel	**Smart Distribution Panel:** Supports up to 20 DC circuits (6 app-controlled) and 8 AC circuits (4 app-controlled) for seamless power distribution.
PV100 FX	**100W Flexible Solar Panel**
Note: The RV5 cannot be paralled.	

For instructions on other components, please refer to their respective user manuals.

3.1.2 RV System Wiring

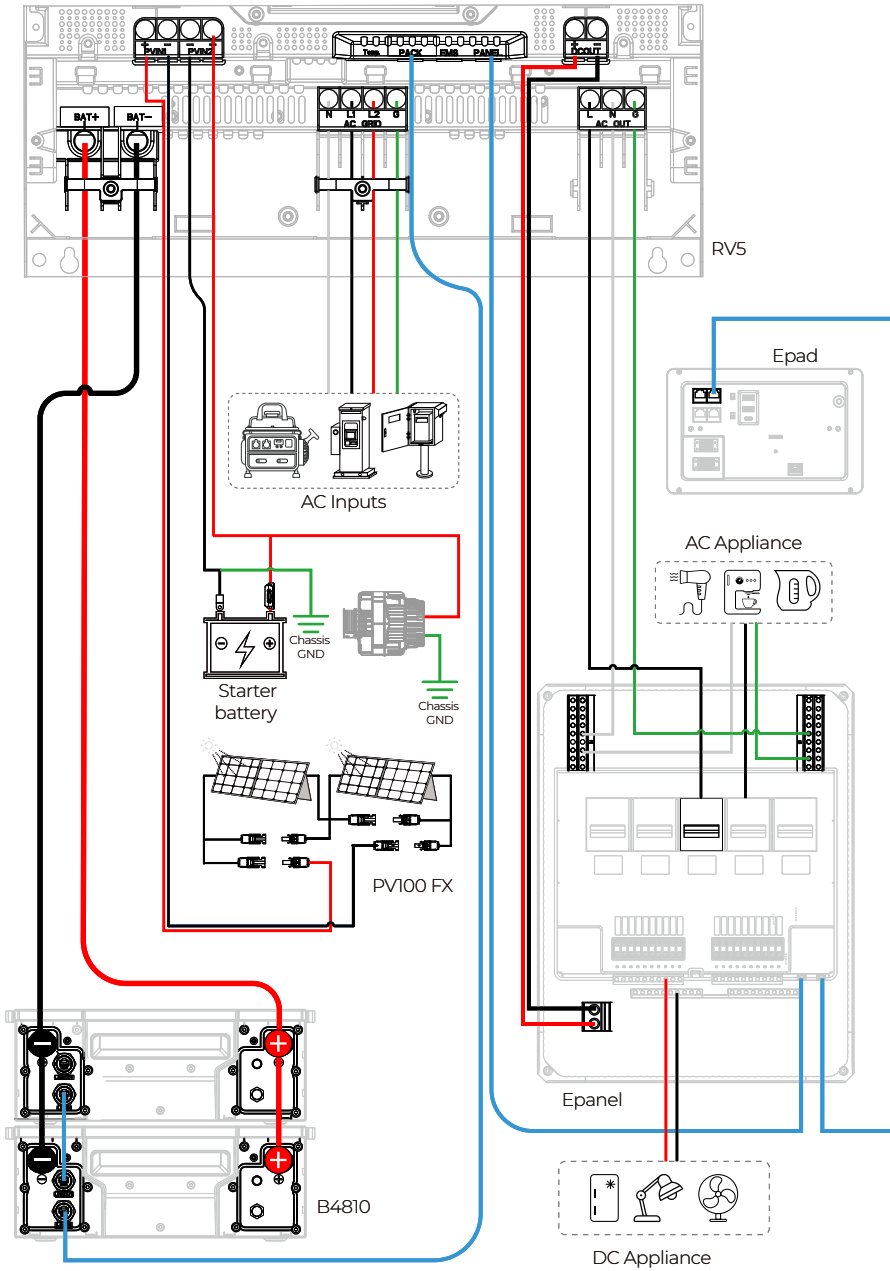

RV system wiring

3.1.3 Off-grid System Wiring

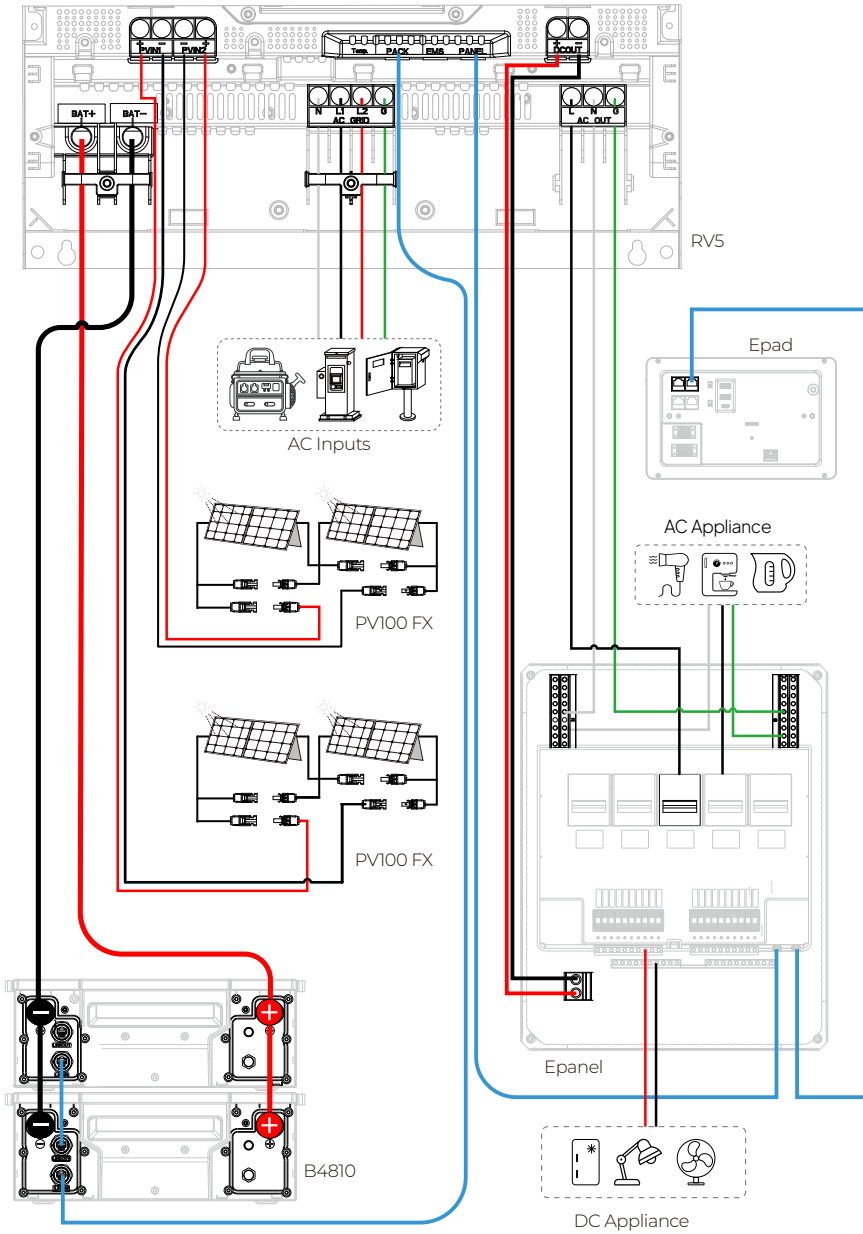

Off-grid system wiring

3.2 RV5 Power Hub

3.2.1 Dimensions

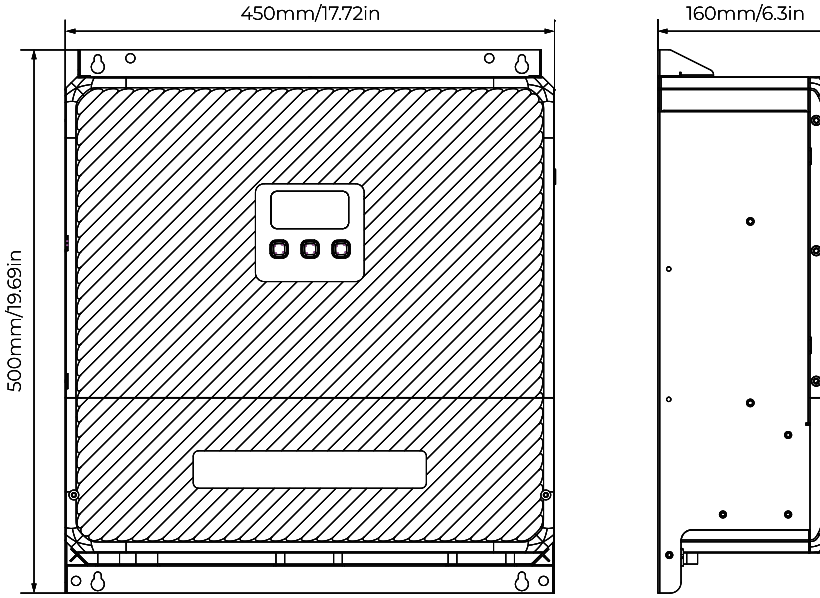

3.2.2 Overview

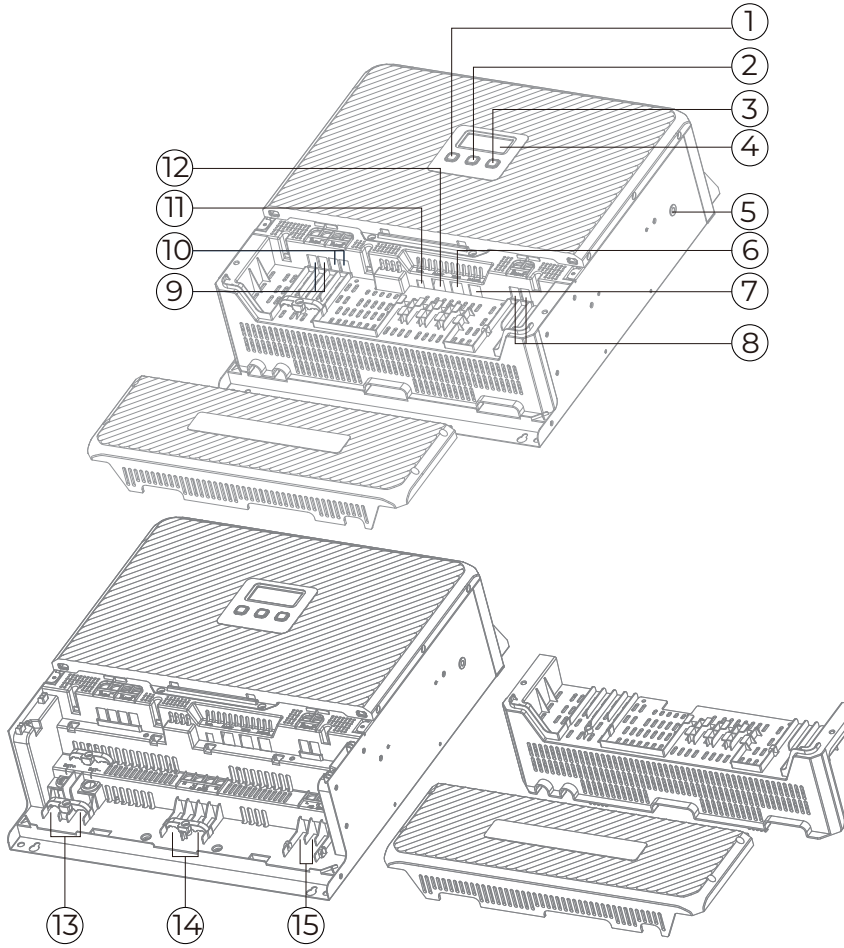

① DC Power Button
② Power Button
③ AC Power Button
④ LCD Display
⑤ Grounding Terminal*
⑥ EMS Communication Port
⑦ Epanel Communication Port
⑧ 12V/24V DC Output
⑨ PV1 Input
⑩ PV2 Input
⑪ Battery Temperature Sampling Port
⑫ Battery Communication Port
⑬ Battery Terminal
⑭ AC Input (N/L1/L2/G)
⑮ AC Output (L/N/G)

* Used for grounding when powering certain appliances.

3.2.3 LCD Display

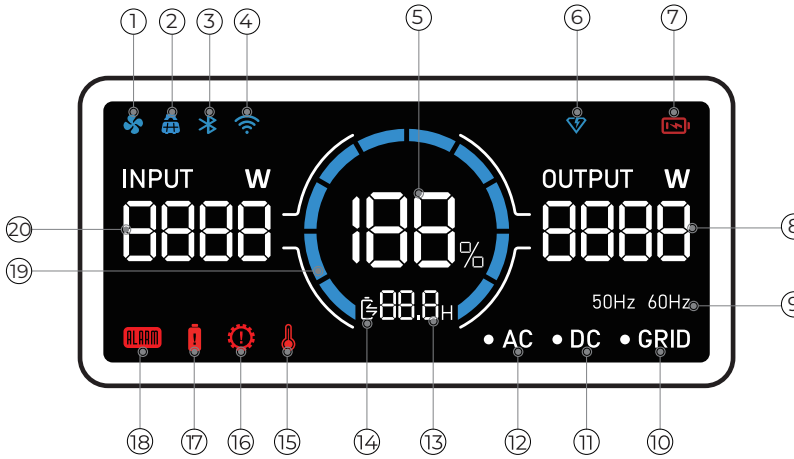

① Fan
② PV Input
③ Bluetooth Connection
④ WiFi Connection
⑤ State of Charge (SoC)
Capacity Progress;
⑥ Turbo Charging
⑦ Low Battery Alert
⑧ Output Power
⑨ AC Output Frequency
⑩ AC Input
⑪ DC Output
⑫ AC Output
⑬ Remaining Time
⑭ Charge / Discharge Status
⑮ High Temperature
⑯ Overload
⑰ Over-current
⑱ System Fault
⑲ Charge / Discharge Progress
⑳ Input Power

4. Set up Your RV5

	Danger
	• Do not install the unit below pipes, windows, or in areas prone to water leaks and accumulation. • Disconnect all electrical connections from the unit before installation.
	Warning
	• Do not block ventilation openings or heat dissipation pathways. • Restricted airflow can lead to overheating and pose a fire risk.
	Caution
	• When moving the unit, be mindful of its weight and balance. Take care to avoid tipping or dropping it, as that could result in damage to the unit or personal injury. • Do not lift heavy loads without assistance.

4.1 Required Tools



#2 Screwdriver

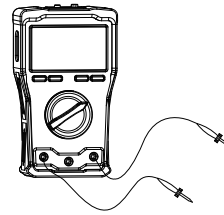

Multimeter



Allen Wrench (6mm)

Note: The listed tools are required for installing the RV5. Please prepare any additional tools and accessories as needed.

4.2 Mount the RV5

4.2.1 Space Requirements

Make sure there's at least 8in (20cm) of space around the unit for cables and airflow as shown below.

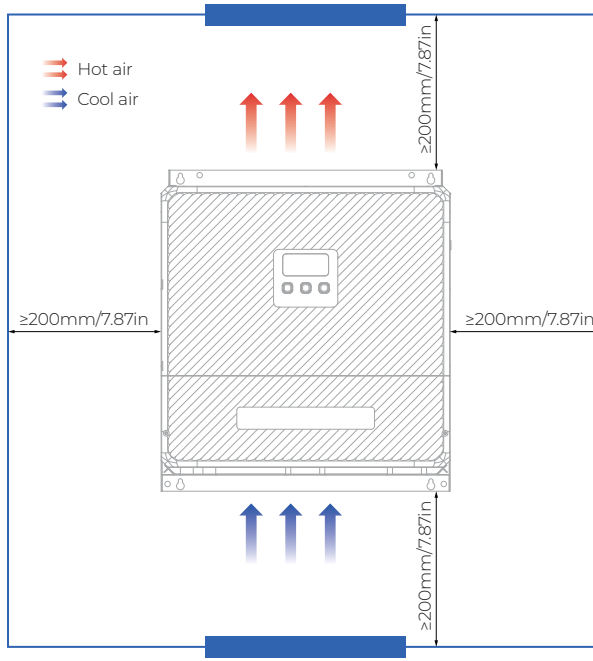

Space requirements

If the RV5 operates in a high-temperature environment without proper ventilation, its charging and discharging power will decrease. To maintain performance, ensure the RV5 has adequate ventilation.

Note: The data shown is based on lab tests under controlled conditions and is for reference only. Actual results may vary based on the environment.

Ambient Temperature	Charging Power		Discharging Power		
	AC	DC	AC	12VDC	24VDC
131°F (55°C)	5,000W	3,000W	4,000W	1,000W	1,620W
95°F (35°C)	5,000W	3,600W	5,000W	1,360W	1,620W

4.2.2 Mounting Instructions

Danger

- Before drilling, check for nearby water pipes or electrical cables to avoid any hazards.
- The included M8 screws and anchors are for wooden and cement walls. Use suitable screws for other surfaces to ensure a secure installation.

RV5 can be installed in two ways: wall-mounted or floor-mounted, using different screw holes shown below.

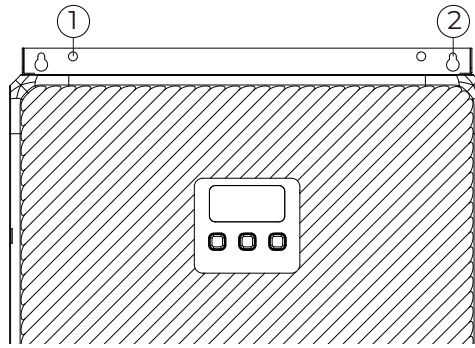

① Round holes: For floor mounting in RVs, boats, or other vibration-prone condition.

② Keyhole slots: For wall mounting in stable places like cabins. Not for use in moving vehicles.

A. Wall-Mounted Installation

Step 1: Select a suitable location. Tape the drilling template to the wall and mark the keyholes.

Step 2: Use a #2 screwdriver to fasten the M8 screws into the keyhole slots.

Step 3: Hang the RV5 on the screws.

Step 4: Ensure all screws are firmly tightened.

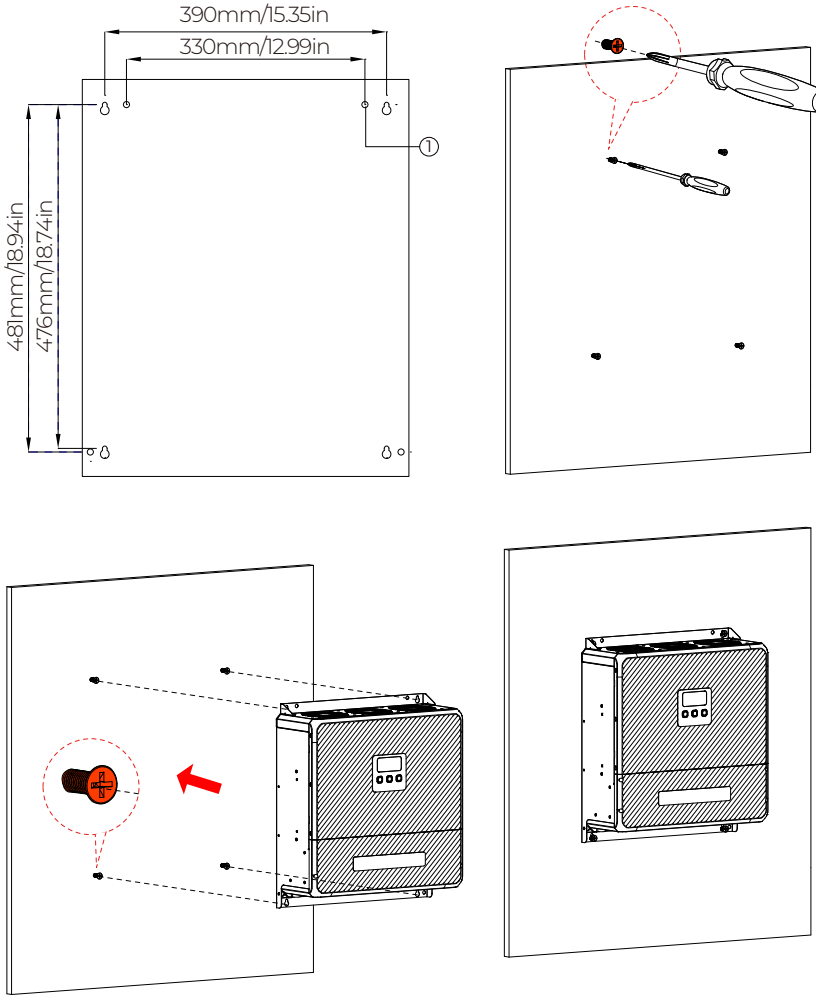

B. Floor-Mounted Installation

Step 1: Select a suitable location. Tape the drilling template to the wall and mark the round holes.

Step 2: For cement walls, drill holes at the marked points and insert the anchors.

Step 3: Secure the unit by driving M8 screws into the anchor.

For other wall materials, drive the appropriate screws into the wall. It's recommended to have 2 people for this.

Step 4: Ensure all screws are firmly tightened.

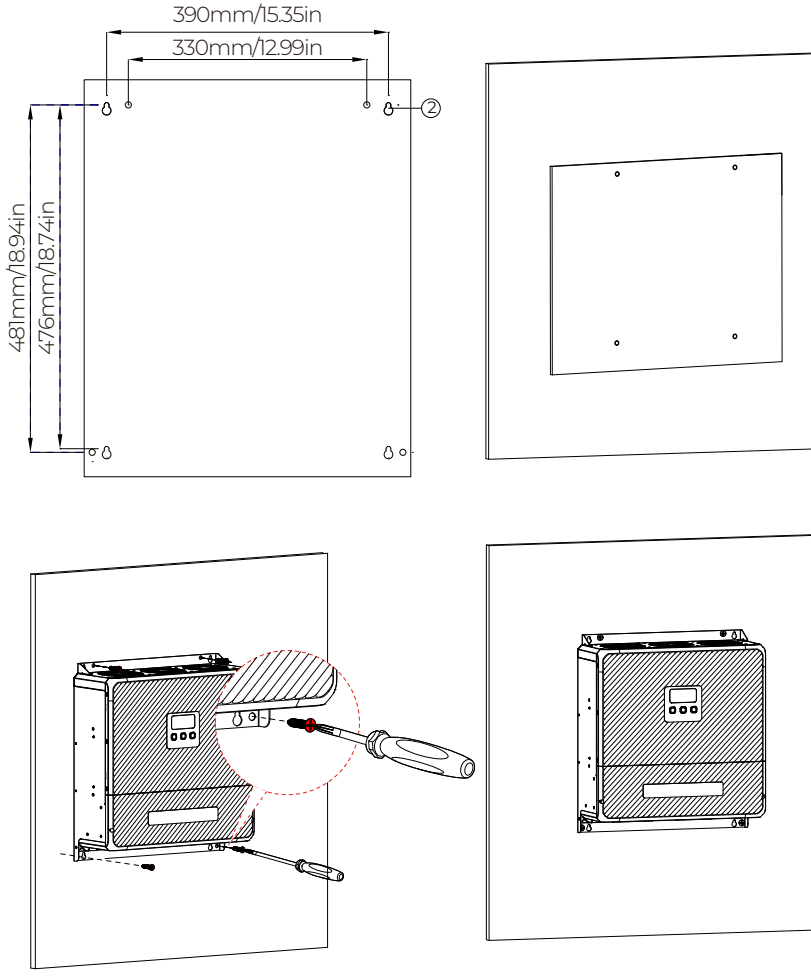

Floor-mounted installation

4.2.3 Install the Waterproof Cover

In rainy areas, you can install the optional waterproof cover above the fan vent to prevent ceiling drips.

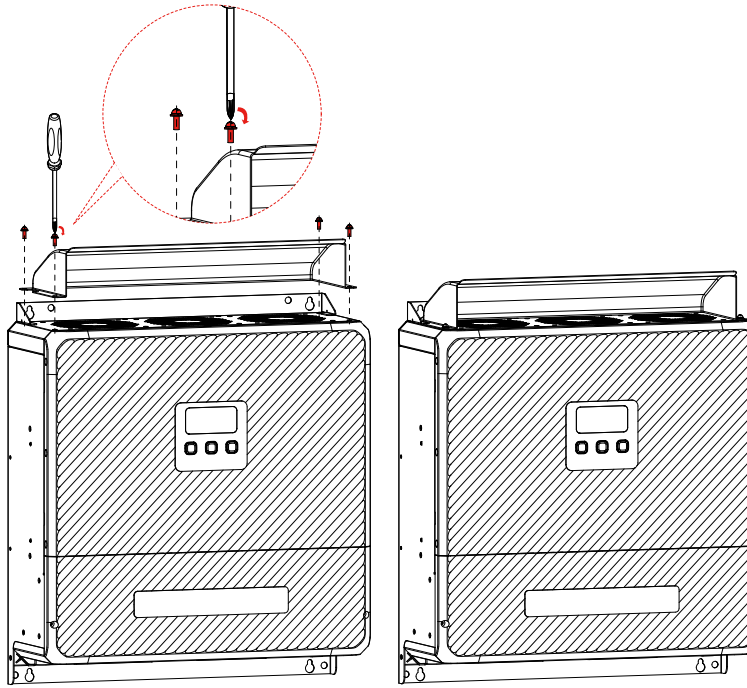

Waterproof cover installation

4.3 Wire and Fuse Specifications

For best performance and safety, use the shortest and thickest cables possible. Undersized cables can overheat and cause a fire risk. If you're unsure about the right cable size, contact BLUETTI support or consult a professional.

Connection	Image	Wire Gauge	Qty.	Recommended Fuse	Note
To 48V Battery		0-4 AWG (50-16mm²)	2 (1 red, 1 black)	~200A (Use a fuse rated at ~1.5x current)	No fuse needed with the B4810 battery. Choose the wire gauge based on load power.
AC Input Cable		6-8 AWG (10-6mm²)	3 (for 3-pin) / 4 (for 4-pin)	Built-in fuse with the AC input port	Match the wire gauge to your AC input socket specifications.
AC Output Cable		6-8 AWG (10-6mm²)	3	/	
Solar Charging Cable	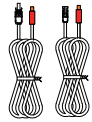	6-8 AWG (10-6mm²)	2 (1 red, 1 black)	/	
Vehicle Charging Cable		6-8 AWG (10-6mm²)	2 (1 red, 1 black)	~75A	A fuse is required for vehicle charging.
DC Output Cable		2-4 AWG (25-16 mm²)	2 (1 red, 1 black)	/	
RJ45 Ethernet Cable		/	*	/	Required for BLUETTI devices communicating with RV5. Use the shortest cable possible.

4.4 Wiring Overview

Step 1

Make sure the unit is intact and securely mounted.



Step 2

Remove the two external screws and take off the first cover. Keep the screws and set the cover aside.

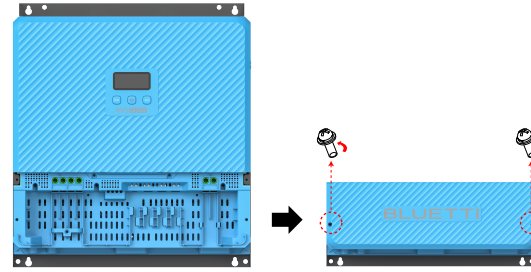

Step 3

Remove the second panel (no screws).

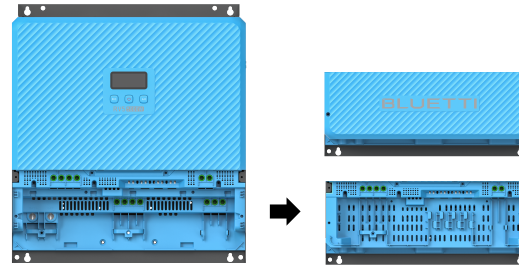

Step 4

Connect the cables as shown and secure them.

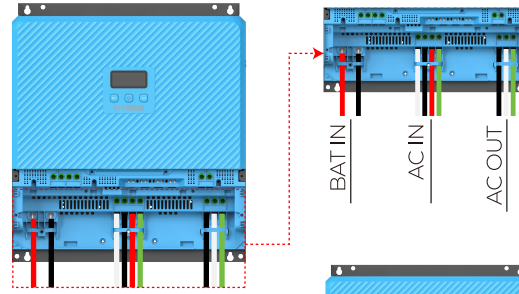

Step 5

Reattach the second panel.

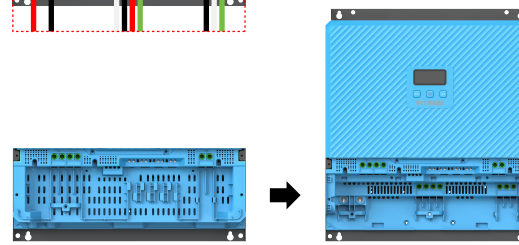

Step6

Connect the cables as shown and secure them.

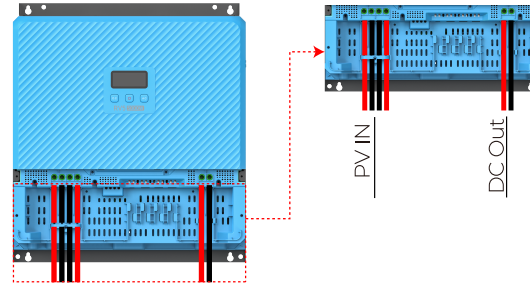

Step7

Connect the commu nication cables.

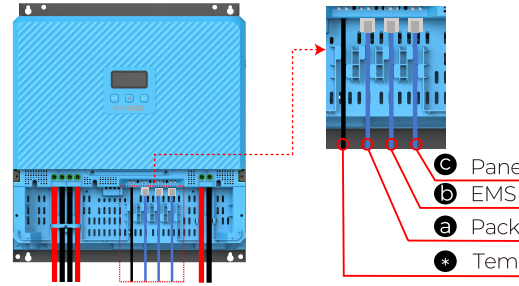

Step8

Secure the first cover with all screws.



Step9

Connect the ground ing cable.

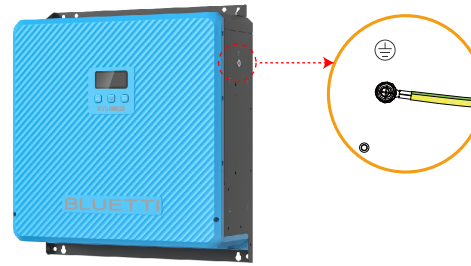

Step10

Power on the unit and complete the initial setup in the BLUETTI app.

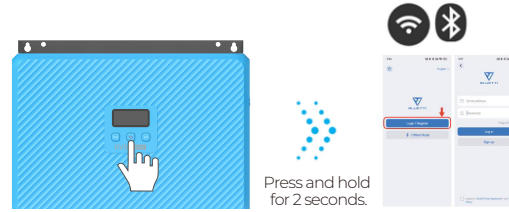

4.5 AC Input Wiring

The RV5 supports both single-phase 120V input and 208V/240V input (EV charging mode). Below is the power flow for each mode:

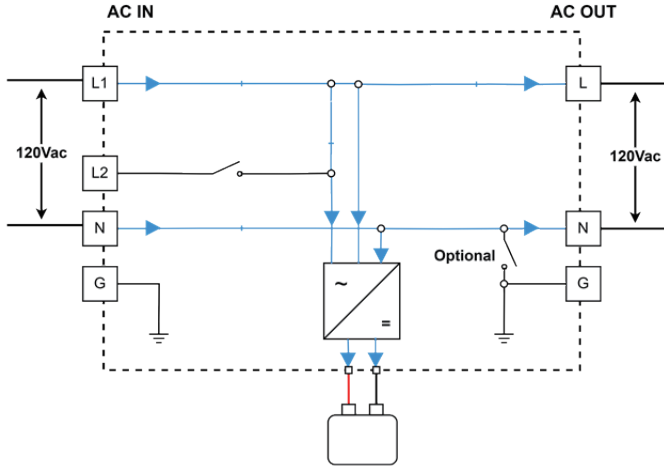

Bypass Mode (120V Input)

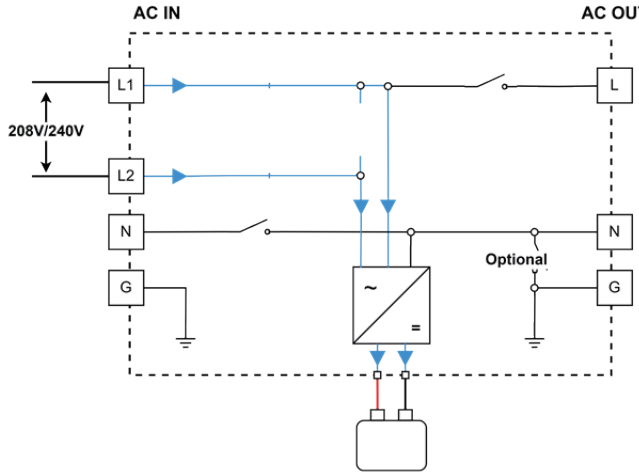

EV Charging Mode (208V/240V Input)

4.5.1 Shore Power

Connect the AC input cable from the RV5 to a 120V shore power inlet.

Note: A 3-pin RV adapter is required.

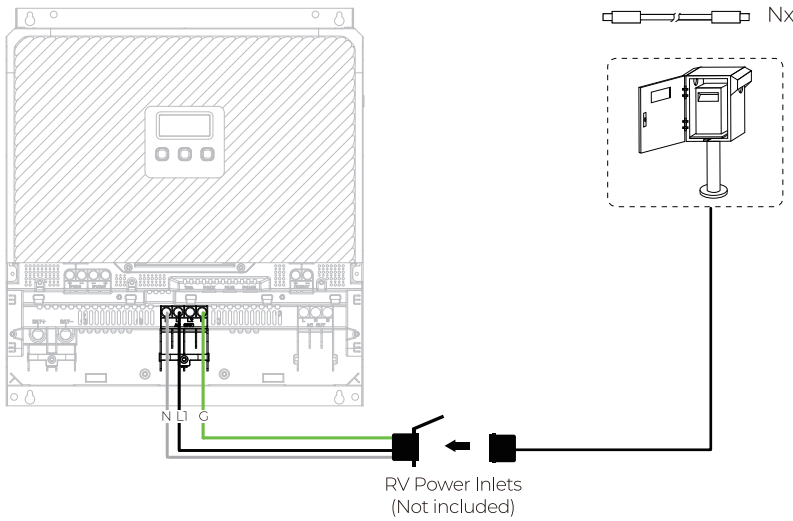

Single-phase 120VAC shore power charging

4.5.2 Generator

Connect the RV5 to a gasoline, propane, or diesel generator using the AC charging cable.

The charging stops automatically when the battery is fully charged.

Note: This product requires a 3-pin RV inlet (not included).

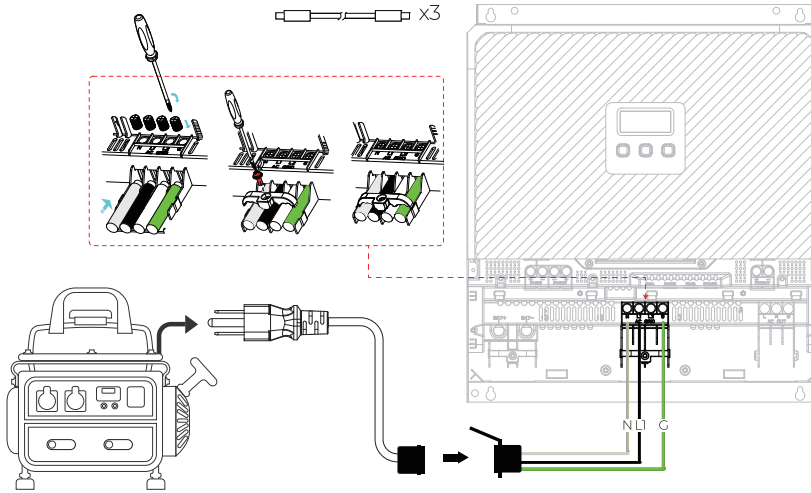

Single-phase 120VAC generator charging

If using the Epad, connect its DO port to the generator's start signal port for black start. For more details, refer to the Epad User Manual.

	Attention
	Make sure the generator delivers a pure sine wave output with matching voltage and frequency. Ensure the generator's output power exceeds the RV5's charging requirements. It's recommended to enable the Grid Self-Adaption mode when charging the RV5 with a generator.

4.5.3 EV Charging Station

Connect the RV5 to an SAE J1772-compatible EV charging station as shown below. The charging stops automatically when fully charged.

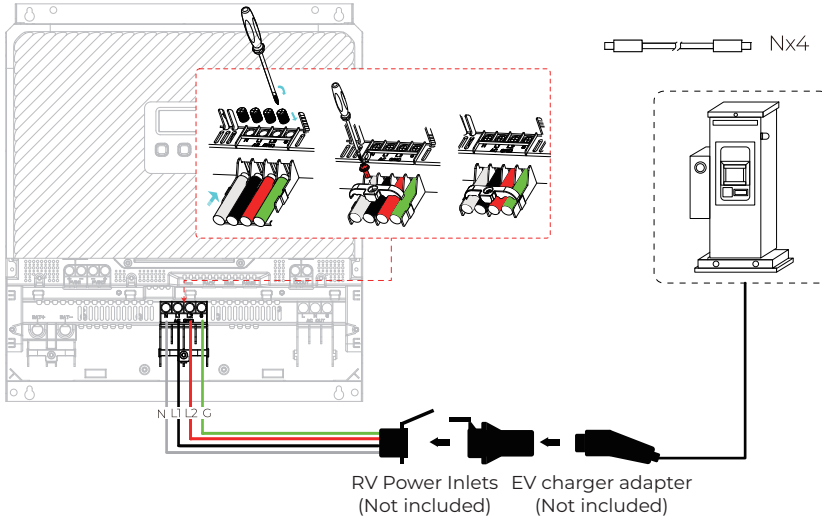

Single-phase 208V/240V EV charging

	Attention
	• Enable EV charging in the app before use. Disconnect the AC loads during charging, as bypass output is not available while charging. • Use a 4-pin RV inlet for permanent wiring.

4.6 AC Output Wiring

The RV5 supports AC output of up to 5,000W and 42A for single-phase 120V AC appliances. In bypass mode, it can handle up to 6,000W and 50A.

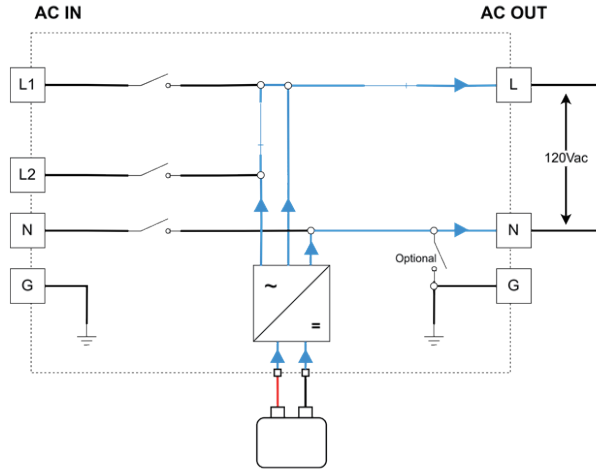

For optimal performance, it's recommended to use the Epanel to manage the AC output current. For details, refer to the Epanel User Manual.

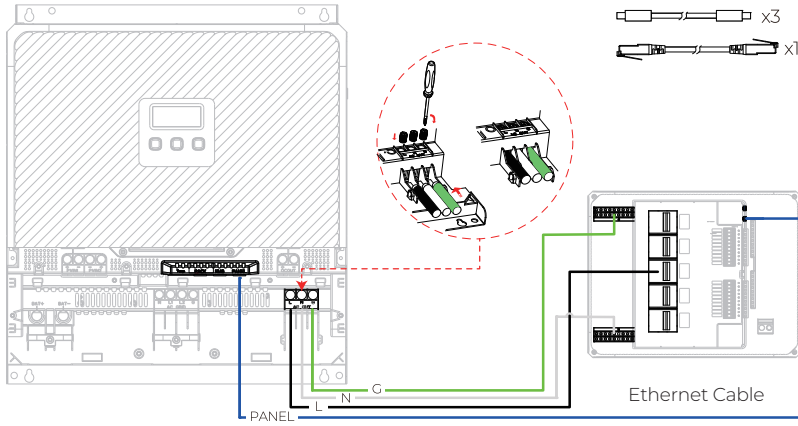

AC output wiring with Epanel

Step 1: Prepare three power cables (bare ends on both sides) and one RJ45 Ethernet cable. Then, unscrew the AC output seal cover.
Step 2: Insert the bare ends of the power cables into the corresponding terminals (L/N/G), and connect the other ends to the Epanel. Make sure there are no exposed cables.
Step 3: Ensure that all connections are secure.

Warning

- Before servicing any connected devices, physically disconnect them from the RV5.
- If the AC output terminals are not in use, keep the seal covers in place.

Attention

- For a permanently wired system, install a ground-fault circuit interrupter (GFCI) at the AC output to protect all branch circuits. We recommend using the Blue Sea Systems GFCI breaker (PN3093).
- Use an overcurrent protection device for the branch circuit. It's recommended to use it with the Epanel.

4.7 Battery Wiring

The RV5 supports 48V battery systems and is compatible with various battery types. To protect your battery, the RV5 applies different current-limiting strategies, with a maximum current of 150A.

Battery Model		Configuration	Current Limit	Notes
B4810		1S1P	1C (A)	For setups with more than 8 batteries, Edocks are required. See **Appendix 1** for wiring details.
		1SnP **(n = 24P Max.)**	150A	
B1210/B1228		4S1P	1C (A)	See **Appendix 2** for wiring details.
		4SnP (n = 24P Max.)	150A	
B300 Series	B300	1SnP (n = 4P Max.)	75A	Necessary adapter cables needed. See **Appendix 3** for wiring details.
	B300K	1SnP (n = 6P Max.)	75A	
	B300S		75A	
Lead-Acid Battery		48V	1C (A)	
Non-communication Lithium Battery		48V	1C (A)	For details, refer to the relevant user manual.

Attention

When using lead-acid or non-communication lithium batteries, ensure the total voltage is 48V.

4.7.1 Wiring Instructions

Warning

The RV5 battery terminal doesn't have reverse polarity protection. Ensure the battery is connected with the correct polarity, as indicated on the port. If you're unsure, use a multimeter or consult a qualified electrician.

To check the battery polarity and voltage with a multimeter:
Step 1: Set the multimeter to DC voltage mode.
Step 2: Connect the positive lead to the battery's positive terminal (red) and the negative lead to the negative terminal (black).

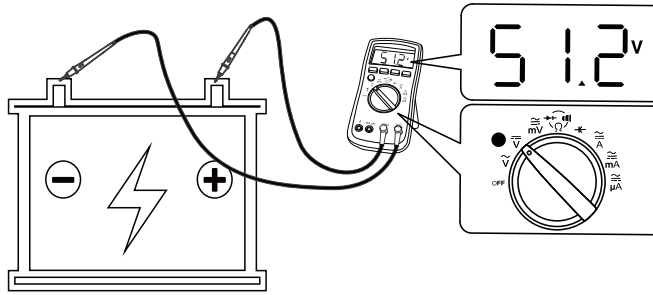

Battery polarity check

Step 3: Check the reading:
- 48V to 56V: The polarity and voltage are correct. You can continue wiring.
- Negative reading: Reverse the connections.
- Outside 48V to 56V: Verify the battery's condition and check the wiring.

Attention

The B4810 and B1210 battery packs have reverse polarity protection. If the polarity is incorrect, an **E091 error** will appear and the power button indicator will flash. For more details, refer to the battery pack's user manual.

4.7.2 B4810 Battery

To achieve full power output, it is recommended to pair the RV5 with two B4810 battery packs, providing a total capacity of 10kWh. When used with a single B4810, the total load power is approximately 4320W.
An Ethernet cable is also required for connection with the B4810. Refer to chapter 4.11 for details.

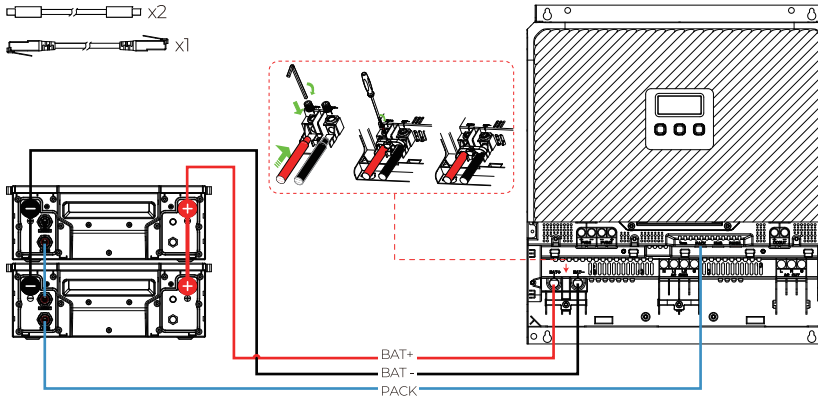

RV5 + 2* B4810 Wiring

Step 1: Prepare two power cables (bare ends on both sides—red for positive, black for negative) and the pre-assembled B4810 battery packs based your load requirements.
Step 2: Connect the black power cable from the RV5's BAT- port to the B4810's main negative terminal.
Step 3: Connect the red power cable from the RV5's BAT+ port to the B4810's main positive terminal.
Step 4: Ensure that all connections are secure.

	Danger
	The RV5 supports stacking up to 4 B4810 units. Stacking more packs could damage the battery casing and pose a safety risk.
	Warning
	• Power off the battery before connecting. • Do not disconnect the battery while it's operating.

4.7.3 Lead-acid Batteries & Non-communication Lithium Batteries

	Attention
	For optimal performance and safety, it is recommended to use the temperature sensor cable. Attach it to the battery surface to help the RV5 adjust its operation based on temperature, ensuring more accurate and safe charging. When connecting lead-acid batteries, ensure they are of the same brand and voltage, as lead-acid batteries don't have a balancing feature. Do not mix different capacities or combine new and used batteries.

When using a lead-acid battery for the first time, please discharge the battery pack to 0% and then fill it up to 100% Soc.

The maximum charging current for lead-acid batteries is set at 0.2C, with the constant charging voltage adjusted for temperature. Non-communication lithium batteries have a maximum charging current of 0.5C.

Since lead-acid batteries cannot release their full capacity under high-rate discharge conditions, and it is easy to accelerate the corrosion of the lead-acid battery plates and capacity decay, please try to avoid frequent or continuous high-rate discharge. It is recom mended to reasonably configure the lead-acid battery capacity according to your actual needs, see the table below:

0.1C load power (AC+DC) can carry load for a long time	Maximum power allowed (estimated based on 90% efficiency) can be short-term loaded	Recommended total lead-acid battery capacity	Recommended series-parallel configuration (taking 12V100Ah lead-acid battery as an example)	Recommended wire diame-ter(Battery to RV5)
6600W	6600W	1500Ah	4S15P	0AWG or 50mm²
4320W	6600W	1000Ah	4S10P	2AWG or 25mm²
2100W	6600W	500Ah	4S5P	2AWG or 25mm²
900W	6600W	200Ah	4S2P	2AWG or 25mm²
450W	4320W	100Ah	4S1P	4AWG or 16mm²

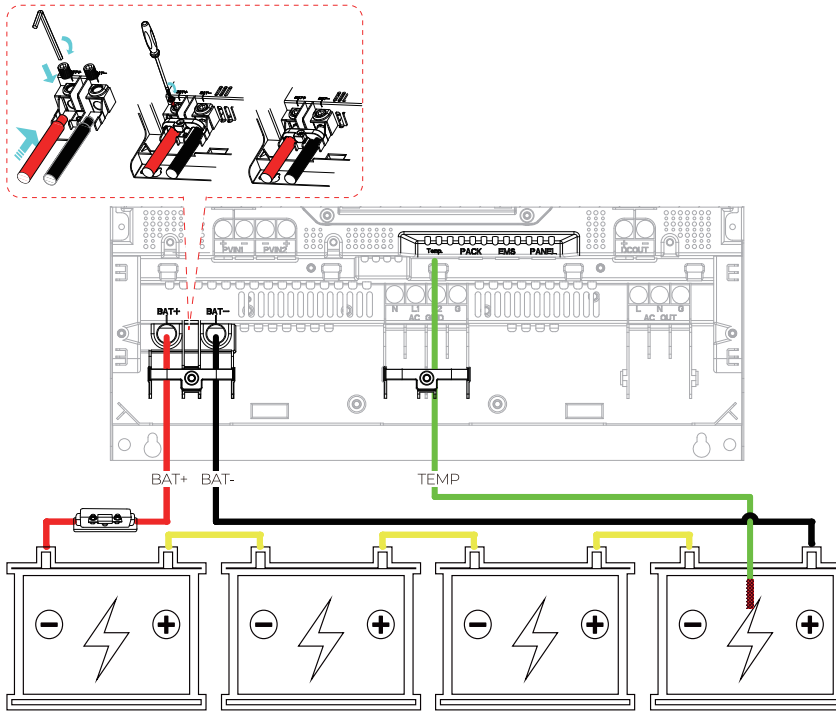

RV5 + lead-acid batteries wiring (4S1P)

Step 1: Wire the 12V lead-acid battery packs in series and parallel to achieve a total voltage of 48V, ensuring correct polarity.
Step 2: Prepare one red and one black power cable (bare ends to OT terminals), and install the appropriate fuse on the battery's positive terminal.
Step 3: Connect the black power cable's bare end to the RV5's BAT- port and the OT terminal to the battery's negative terminal.
Step 4: Connect the red power cable's bare end to the RV5's BAT+ port and the OT terminal to the battery positive terminal.
Step 5: Insert the temperature sensor cable into the battery's temperature sampling port and attach the other end to the battery surface.
Step 6: Ensure that all connections are secure.



Warning

When using lead-acid batteries or non-BLUETTI battery packs:
1. Ensure correct wiring polarity. Damage from reversed polarity is not covered under warranty.
2. Use a properly rated overcurrent protection device, such as a fuse or DC circuit breaker.



Attention

When using a lead-acid battery, turning the device on or off must be done via the power switch button on RV5 (or Epad).
Please note that due to the lower voltage of lead-acid batteries under high discharge rates, overcurrent protection may be triggered, making it impossible to operate at full power.

4.8 DC Input Wiring

4.8.1 Solar Panel



Danger

• Make sure your solar panel(s) meet the following requirements:
VOC: 12V-50V Current: 50A Max. Power: 1,800W Max.
• Do not ground the solar panels' positive and negative terminals.



Attention

Do not use the vehicle's cigarette lighter to charge.

The RV5 comes with two DC input ports, PV1 and PV2. Each supports up to 50A and 1,800W of solar charging power, totaling 3,600W. The charging time may vary based on weather conditions, sunlight intensity, panel orientation, and other variables.

Note: The function of PV2 port can be set through the APP

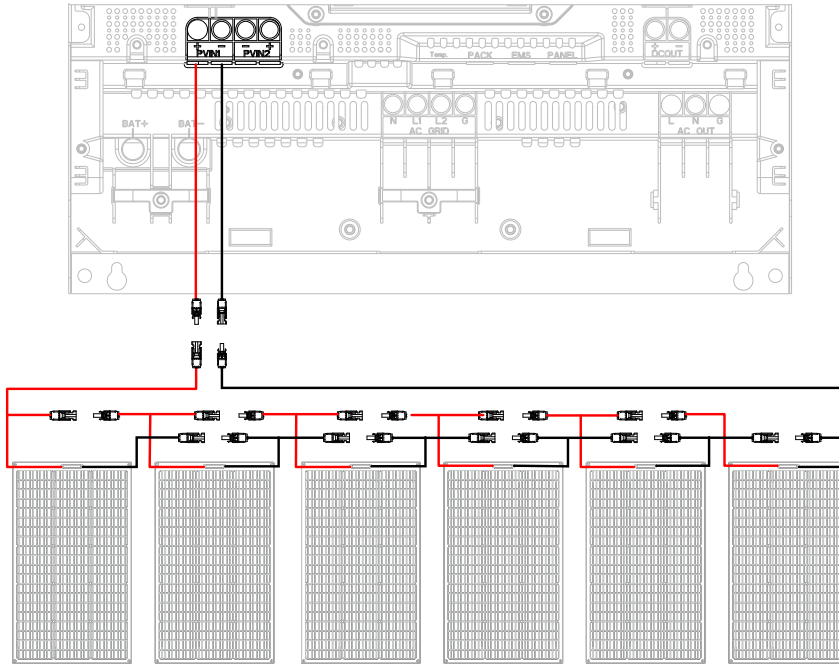

RV5+PV100 FX wiring（6 pcs）

Step 1: Prepare two power cables (bare ends to MC4 connectors-red for positive, black for negative) and the connected PV100 FX solar array. Make sure the PV circuit breaker is off.

Step 2: Insert the bare ends into the PV1+/PV1- ports, ensuring no exposed cables.

Step 3: Connect the MC4 ends to the PV100 FX's MC4 connectors.

Step 4: Ensure that all connections are secure.

For the recommended setup, see the table below. For more details, refer to the PV100 FX User Manual.

Input Power	PV100 FX Panels	Solar Charging Cables
600W	6	5
1,000W	10	9
1,600W	16	15

4.8.2 Vehicle (12V/24V)

	Attention
	For safety, always install a fuse or other overcurrent protection on the starter battery ports. Damage caused by missing protection is not covered under warranty. If you're unsure about the required fuse rating, consider using the optional cable kit provided by BLUETTI or contacting BLUETTI support for assistance.

Connect the RV5 to your vehicle's starter battery via the PV2 ports. The required connection cable and fuse are included in the optional cable kit. Once fully charged, the RV5 will stop charging automatically.
Charging power may vary based on your vehicle's output and environmental conditions. To prevent battery drain, set the charging current in the app according to your alternator's capacity.

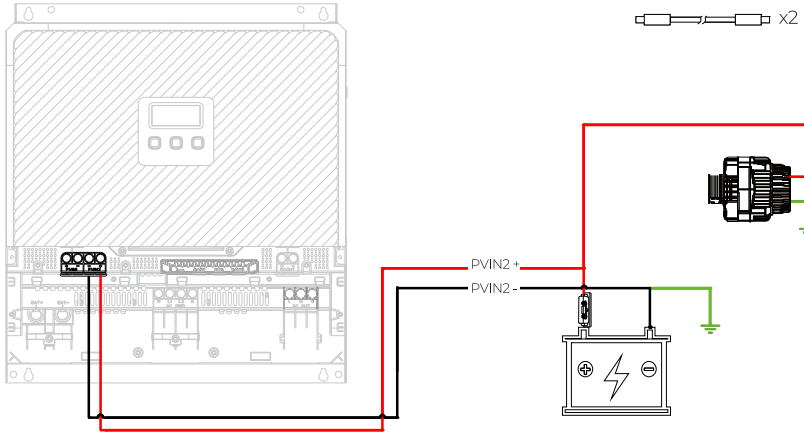

Vehicle charging wiring

Step 1: Prepare two 6 AWG power cables, (bare ends to OT terminals—red for positive, black for negative) and a properly rated overcurrent protection device such as a fuse.
Step 2: Insert the bare ends into the PV2+/PV2- ports, ensuring no exposed cables.
Step 3: Connect the OT terminal of the black (negative) cable to the starter battery's negative terminal.
Step 4: Install a fuse on the starter battery's positive terminal.
Step 5: Connect the OT terminal of the red (positive) cable to the other end of the fuse.
Step 6: Ensure that all connections are secure.

4.9 DC Output Wiring

The RV5 supports both 12V and 24V DC output. Select the appropriate voltage based on your battery system requirements and configure the settings before first use. For setup details, refer to the *App User Manual*.

Supported Output:

- **12V:** 100A, up to 1,360W
- **24V:** 60A, up to 1,620W

It's highly recommended to use the Epanel smart distribution panel along with an Ethernet cable to manage the DC output. Refer to chapter 4.11 for details.

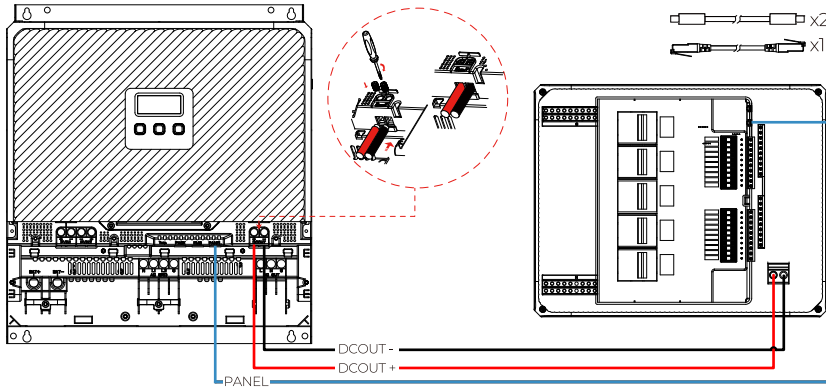

DC output wiring with Epanel

Step 1: Prepare two 2 AWG power cables (bare ends on both sides—red for positive, black for negative).

Step 2: Insert the two ends of the cables into the DC OUT+/DC OUT- ports, and the other ends into the Epanel's DC IN+/DC IN- ports.

Step 3: Ensure all cables are fully secured with no exposed wires.

To power a leveling system, connect it to the DC busbar before any distribution device. This setup supports high-current surges up to 100A at 12V.

	**Danger** Do not connect battery packs to the RV5's DC output ports, as battery charging is not supported.
	**Attention** To change the DC output voltage, turn off the DC output and wait for 1 minute before adjusting the settings.

4.10 Grounding

For temporary AC input connections, such as in an RV or marine setup, the unit must be grounded to the vehicle chassis or the boat's hull or grounding plate. Follow the instructions below for proper installation:

Step 1: Prepare a grounding cable (recommended to use 10mm2 yellow-green outdoor cable), RNB14-6S OT terminal, and M6 screws (pre-installed on the unit).

Step 2: Strip the insulation layer of the grounding cable with a cable stripper to a proper length. Insert the exposed core wires into the RNB14-6S OT terminal and crimp them with a crimp.

Step 3: Fix the OT terminal with M6 screws at the position shown in the figure below. Securely ground the other end of the cable in the favorite way.

Recommended torque: 2 Nm.

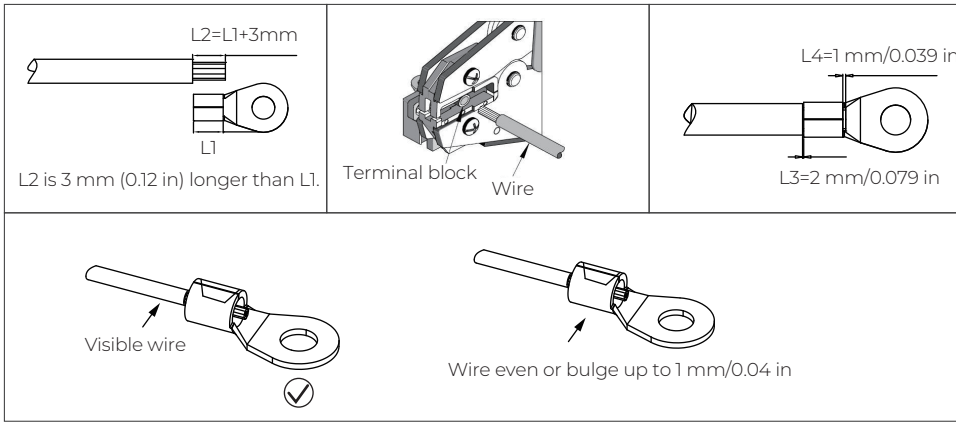

Grounding cable assembly

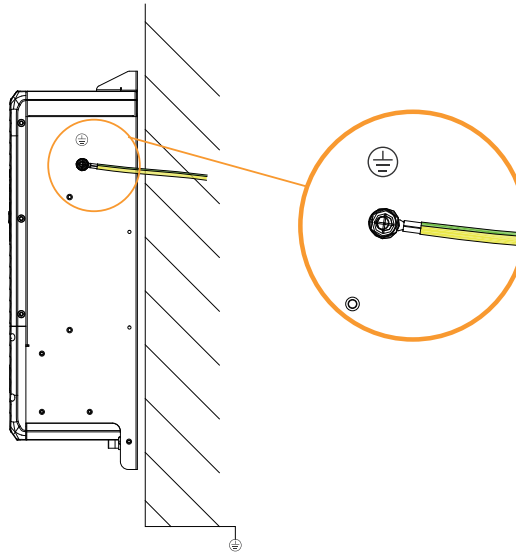

Grounding cable installation

The RV5 also supports an off-grid TT earthing system, i.e. neutral-ground bonding. For details, refer to chapter 5.3.4.

	Danger
	Follow local regulations for proper grounding. Incorrect grounding may pose a risk of electric shock. If you're uncertain, consult a qualified electrician.

4.11 CAN Communication Wiring & Configuration

To ensure seamless communication among your BLUETTI devices, connect and configure them as shown below. Incorrect setup may lead to communication issues.

Note: Do not plug the battery communication cable into the Epad or Epanel ports.

If you're unsure about your setup, contact BLUETTI support for assistance.

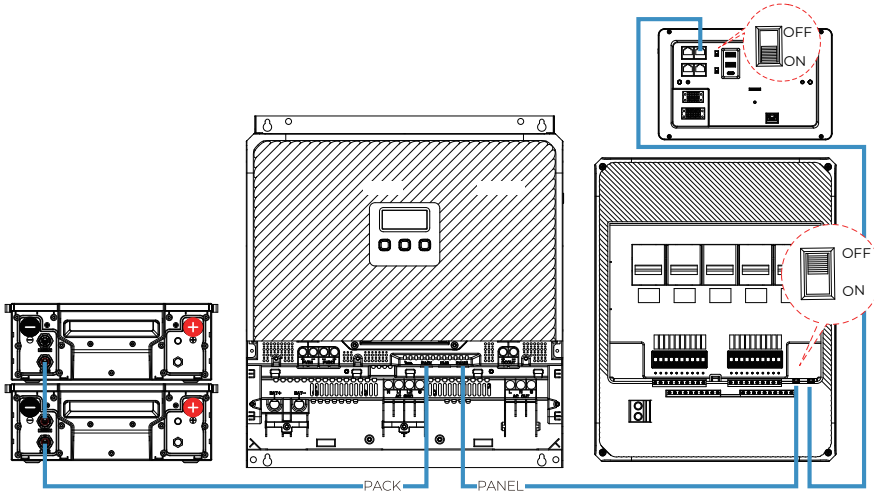

RV5 + B4810 + Epanel + Epad

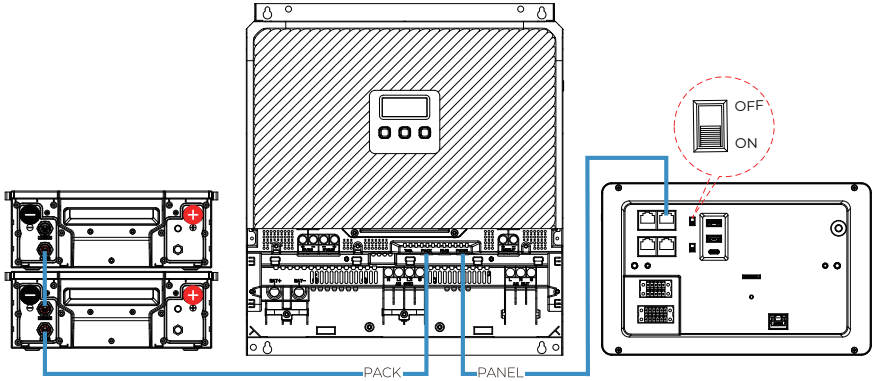

RV5 + B4810 + Epad

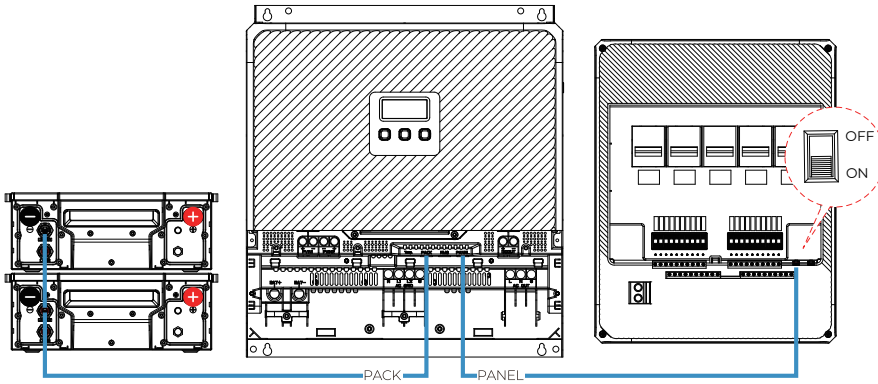

RV5 + B4810 + Epanel

5. Use Your RV5

5.1 Power On/Off

Attention

Before use, double-check that all connections are correct and secure. Once confirmed, cover both the inner and outer panels. Keep the casing intact during operation, and do not open any covers to avoid exposing the ports, leading to electric shock.

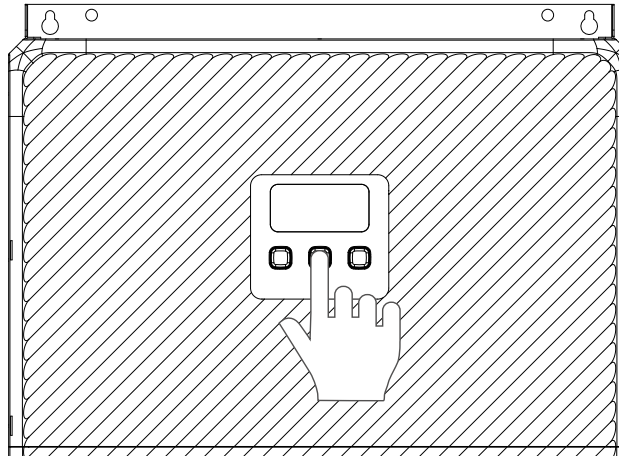

A. Power On

Press and hold the power button for 2 seconds while it's off or in sleep mode. The lit button indicates that the RV5 is on. For initial use, complete the setup in the app.

If you're using BLUETTI B4810, B1210, B1228, or B300 series batteries, you can also power on the unit via the app.

B. Sleep Mode

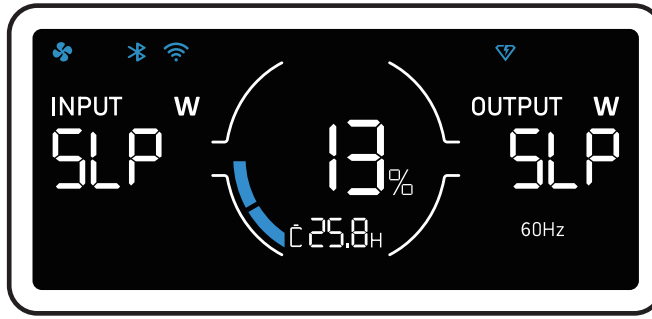

The RV5 features a sleep mode to extend battery life. In this mode, it charges the battery with up to 100W solar power while keeping the display off. When connected to a network, the RV5 also supports remote wake-up.

Enter the mode: With the unit on, press and hold the power button for about 2 seconds until the display turns off. For app instructions, refer to the App User Manual.

Exit the mode: Press and hold the power button for about 2 seconds until the display turns back on.

Attention

- The sleep mode is disabled when AC input is detected. Any AC power source will automatically wake the unit.
- In sleep mode, the unit maintains low-power solar charging. All ports remain live—avoid contact to prevent electric shock.
- This mode can only be enabled via the app.

C. Power Off



① 3s ② 1.5s ③ 8s

Press and hold the power button for 5 seconds until "OFF" appears on the display (③). The display will first enter sleep mode (①), then turn off (②).

Note: The unit cannot be powered off while connected to solar or AC input. To shut it down, disconnect the solar and AC sources physically or turn off the circuit breaker first.

Attention

- When the RV5 is on (not in sleep mode), press any button to activate the display.
- Startup time may vary depending on the connected battery type.

5.2 Initial Setup

Attention

- Configure the ports in the app before first use.

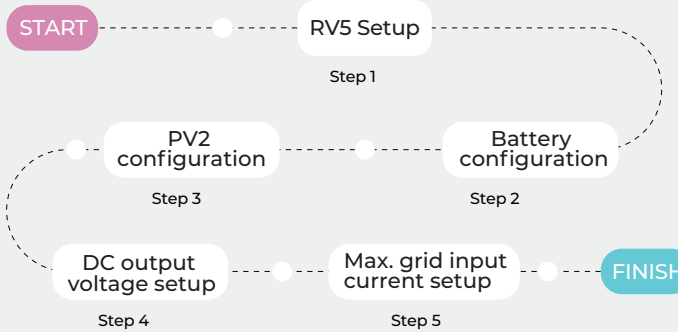

Initial app configuration

Note: For detailed configurations, refer to the *App User Manual*.

5.3 Configure Your RV5

5.3.1 Charging Mode

The RV5 offers three charging modes: Standard, Turbo, and Silent. You can set Turbo and Standard modes directly on the unit, or use the app to set any of the three modes. Charging stops automatically once the battery is fully charged, and the charging power is limited by the grid's maximum input current and battery capacity. By default, the unit charges in Standard mode.

Mode	Charging Power			Charging Time	
	AC	PV	AC + PV	(for Single B4810 Units)	(for two B4810 Units)
Standard	1,440W Max.	2,000W Max.	2,000W Max.	2.5 hours	4.5 hours
Turbo	5,000W Max.	3,600W Max.	8,600W Max.	80% charge in 45 mins; full charge in 1.5 hours	80% charge in 50 mins; full charge in 2 hours
Silent	1,200W Max.	1,200W Max.	1,200W Max.	4 hours	7.5 hours

5.3.2 Adjust Grid Input Current

The default maximum grid input current is 12A. Use the app to increase it up to 50A. For safety, set the maximum input current to 80% of your outlet's rated capacity. Alternatively, consult an electrician to confirm that the outlet can handle the current.

5.3.3 Grid Self-Adaption Mode

When connecting with a generator or unstable grid power, or if consumption power exceeds charging power, enable this mode in the app. The RV5 automatically adjusts to handle power fluctuations, protecting the unit and connected devices from potential issues due to variations in power quality.

You can also adjust the input voltage limits in the app's advanced settings to match your power needs. For details, please refer to the App User Manual.

5.3.4 Neutral-Ground Bonding

The RV5 has a built-in neutral-ground bonding relay, which automatically manages the neutral-to-ground connection based on the inverter's operating mode when enabled in the app's Advanced Settings.

• When the inverter is connected to AC power:

The AC input relay closes, and the neutral-ground bonding relay opens. The neutral-to-ground connection is provided by the AC source, allowing RCD, RCCB, RCBO, or GFCI protection devices to function properly.

• When there is no AC input:

The AC input relay opens, and the neutral-ground bonding relay closes, internally bonding neutral to ground. At this time, the RCD, RCCB, RCBO, or GFCI also are able to function properly.

For details, refer to the *App User Manual*.

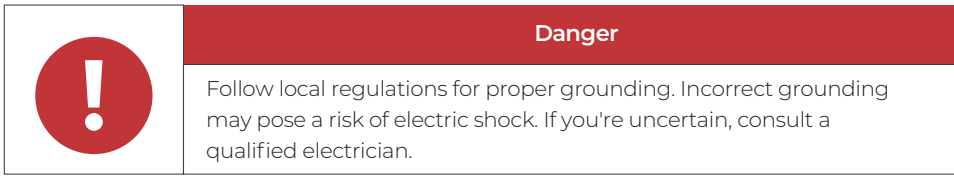

5.4 Button Control

①Enter the Settings Mode: Press and hold the AC and DC power buttons simultaneously.

② On the P01 page:

· Adjust settings: Press the DC power button to navigate through the items, and press the AC power button to adjust.

· View information: Long press the DC power button to view the unit's SN, and press it again to navigate through information. When on E page, long press the AC power button to clear the history.

③ Exit the Settings Mode: Press and hold both the AC and DC power buttons again.

6. Maintenance and Care

Always power off the system before performing maintenance tasks such as cleaning, checking connections, and verifying grounding. The RV5 requires regular maintenance, including:

• Inspect and clean the fan, fan guard, and heat sink if dust or blockages are present.

• Ensure that the fan operates smoothly without any abnormal noise.

• Check and tighten input and output cable connections using a torque wrench. For frequent mobile use, inspect the connections at least once a month.

7. Specifications

Model		RV5
Battery Terminal[1]		
System Voltage		48V
Max. Input/Output Current		150A
AC Input		
Standard AC Input (N/L1/G)	Rated Input Voltage	120V
	Rated Input Current	42A
EV Input (L1/L2/G)	Rated Input Voltage	208V/240V
	Rated Input Current	22A
Input Frequency		60Hz ±3Hz
Uninterruptible Power Supply (UPS)		Switchover time ≤20ms
Bypass		50A Max. (EV does not support bypass mode.)
Charging Power		5,000W Max.[2]
AC Output		
Rated Output Voltage		120V
Rated Output Current		42A
Rated Output Frequency		60Hz
Rated Output Power		5,000W

PV1/PV2 Input		
PV1/PV2 (Solar)	Max. Input Power	1,800W
	Input Voltage	12V to 50V
	Max. Input Current	50A
PV2 (Vehicle Charging)	Max. Input Power	600W (12V) 1,200W (24V)
	Input Voltage	12V to 14.4V (12V battery) 24V to 28.8V (24V battery)
	Max. Input Current	50A
DC Output		
Rated Output Voltage		12V/24V
Rated Output Current		100A (12V) 60A (24V)
Rated Output Power		1,360W (12V) 1,620W (24V)
General		
Weight		Approx. 30.86lbs (14kg)
Dimensions		17.72 × 19.69 × 6.30in (450 × 500 × 159.9mm)
Operating Temperature		-4°F to 113°F (-20°C to 45°C)
		113°F to 131°F (45°C to 55°C)*Load derating under over-temperature conditions.
Storage Temperature		-4°F to 131°F (-20°C to 55°C)
Working altitude		≤2000m
Operating Humidity		95% Max.
Certification		UL458

[1]Compatible with B4810, B1210, B300 series, and other lithium and lead-acid batteries.
[2]Power limits may vary based on ambient temperature and the connected battery capacity.

8. Troubleshooting

On the Error Code page, the and error code appears simultaneously on the display. See the table below for guidance.

Error Code	Description	Solutions
E001	Inverter overload	• Check device power usage. • Reduce load if too high.
E002	Inverter overtemperature protection, AC output off	• Wait 10 mins for the unit to cool down. • Turn on the AC output again.
E003	Inverter short circuit	• Check device for short circuits. • Disconnect the fault and fix.
E026	Unit overload	• Verify the battery pack is properly connected. • Check if the power usage exceeds the battery terminal's limit.
E033	PV1 overvoltage	• Make sure the PV1 input voltage is within 12V-50V.
E034	PV2 overvoltage	• Make sure the PV2 input voltage is within 12V-50V.
E036	PV1 overcurrent	• Make sure to use solar panel(s) as the input source. • If the voltage from the panels is higher than the battery voltage, just wait until the battery voltage rises above the panel voltage. The system will recover automatically.
E037	PV2 overcurrent	
E039	PV1 overtemperature	• Wait 10 mins for the unit to cool down. • Re-enable the PV1 input.
E040	PV2 overtemperature	• Wait 10 mins for the unit to cool down. • Re-enable the PV2 input.
E065	DC output short circuit	• Disconnect DC loads, and restart the RV5.
E067	DC output overcurrent	• Disconnect DC loads, and restart the RV5.
E068	DC output overtemperature	• Wait 10 mins for the unit to cool down.

E070	Battery System communication failure	• Ensure the Ethernet cable is properly connected to the battery pack. • If using a non-communication battery, make sure it's set accordingly.
E075	BMS system failure	• Please handle according to the attached battery pack fault code.
E081	Battery overvoltage	• Disconnect the input source.
E085	Charging temperature too high	• Place the battery in an ambient temperature range of -4°F to 131°F (-20°C to 55°C) .
E086	Charging temperature too low	
E087	Discharging temperature too high	
E088	Discharging temperature too low	
E113	Grid overvoltage	• Verify home grid voltage. • Contact utility company or enable the Grid Self-adaption mode if necessary.
E114	Grid undervoltage	• Verify home grid voltage. • Contact utility company or enable the Grid Self-adaption mode if necessary.
E115	Grid overfrequency	• Verify home grid frequency. • Contact utility company if necessary.
E116	Grid underfrequency	• Verify home grid frequency. • Contact utility company if necessary.
E117	Grid oscillation	• Verify the grid's stability. • Enable the Grid Self-adaption mode if necessary. • Please check if EV mode is enabled when EV charging is connected.
E121	PV configuration error	• Check if the PV2 port is configured correctly.
E129	Battery pack communication failure (Pack)	• Check if the battery pack communication cable is loose or detached. Reconfirm the number of battery packs in the system.
Others	/	• Please check if EV mode is enabled when EV charging is connected.

FAQs (Frequently Asked Questions)

Q1: Can I use third-party solar panels with this unit?

A: Yes, you can use third-party solar panels with open circuit voltage of 12V-50V. Avoid mixing different types of solar panels.

Q2: Does it support charging and discharging at the same time?

A: Yes, RV5 supports pass-through charging as long as EV charging is not activated.

Q3: Why is the charging power often too low?

A: The built-in BMS adjusts the charging power based on battery temperature and SoC to protect the battery and extend its life.

Q4: Why can't I run the load at full power with a lead-acid battery?

A: The RV5 limits the current from lead-acid batteries to protect the terminals and cables. If the battery voltage drops too low, this can prevent the RV5 from providing full power to the load.

Appendix 1

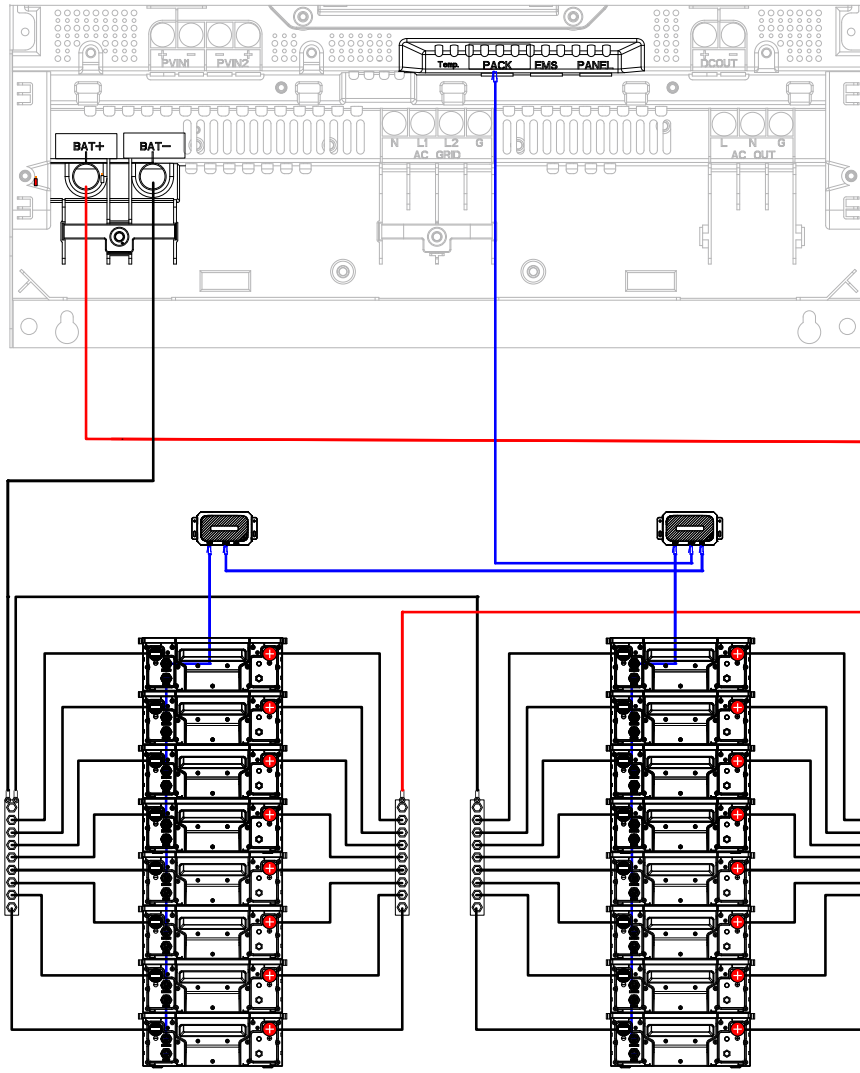

B4810 + Edock connection

Choose the appropriate busbar pair size based on the number of connected battery packs, ensuring a minimum current capacity of 150A.

For more than two B4810 units, we recommend using a busbar pair to keep cable lengths consistent for each connection to the RV5.

Appendix 2

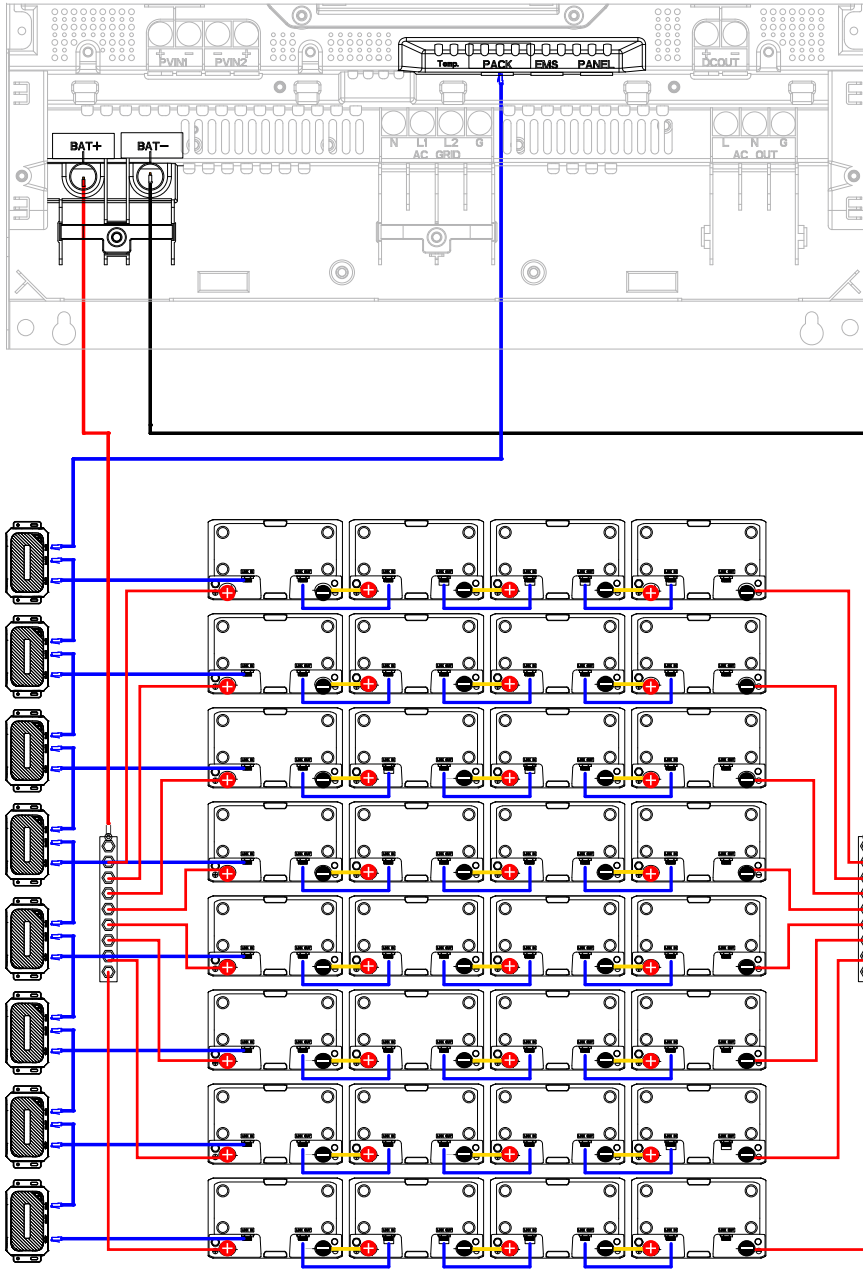

B1210 + Edock connection

Appendix 3

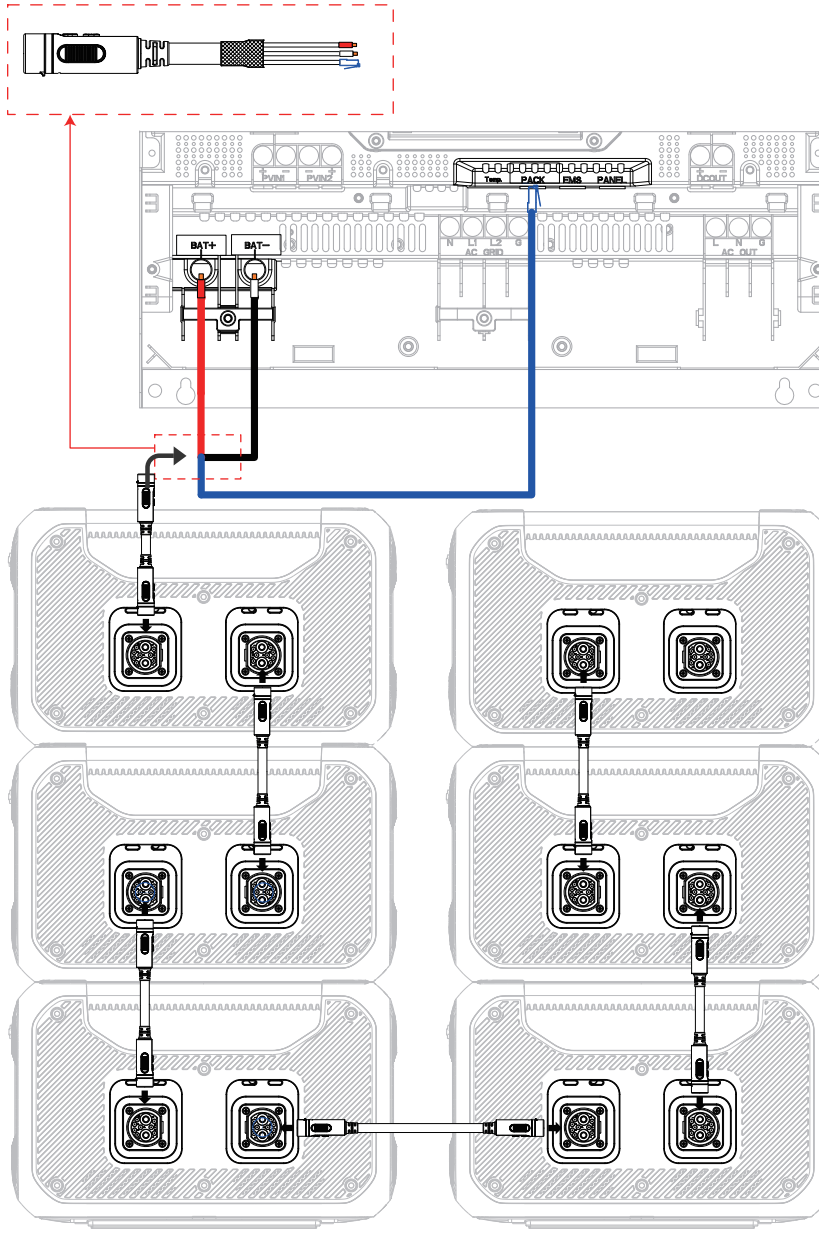

B300K connection

Note: The RV5 supports connecting up to four B300 units.

Compliance

• FCC Statement

This device complies with part 15 of the FCC Rules. Operation is subject to the following two conditions:

(1) This device may not cause harmful interference.

(2) This device must accept any interference received, including interference that may cause undesired operation.

This equipment has been tested and found to comply with the limits for a Class B digital device, pursuant to part 15 of the FCC Rules. These limits are designed to provide reasonable protection against harmful interference in a residential installation. This equipment generates, uses and can radiate radio frequency energy and, if not installed and used in accordance with the instructions, may cause harmful interference to radio communications. However, there is no guarantee that interference will not occur in a particular installation. If this equipment does cause harmful interference to radio or television reception, which can be determined by turning the equipment off and on, the user is encouraged to try to correct the interference by one or more of the following measures:

- Reorient or relocate the receiving antenna.
- Increase the separation between the equipment and receiver.
- Connect the equipment into an outlet on a circuit different from that to which the receiver is connected.
- Consult the dealer or an experienced radio / TV technician for help.

FCC Caution: Any changes or modifications not expressly approved by the party responsible for compliance could void the user's authority to operate this equipment.

IMPORTANT NOTE: FCC Radiation Exposure Statement

This equipment complies with FCC radiation exposure limits set forth for an uncontrolled environment. This equipment should be installed and operated with a minimum distance of 20cm between the radiator and your body.

• **IC Caution**

This device contains licence-exempt transmitter(s) / receiver(s) that comply with Innovation, Science and Economic Development Canada's licence-exempt RSS(s). Operation is subject to the following two conditions:

(1) This device may not cause interference.

(2) This device must accept any interference, including interference that may cause undesired operation of the device.

RF exposure statement: The equipment complies with IC Radiation exposure limits set forth for uncontrolled environments. This equipment should be installed and operated with a minimum distance of 20cm between the radiator and your body.

CAN ICES (B)/NMB(B) (Canada)

This Class B digital apparatus complies with Canadian ICES-003.

Need Help? We're here for you!

Customer Service(US)

+1 800-200-2980 (Mon-Sun 9:00-17:00) service@bluettipower.com

Customer Service(DE)

+49 8006273016 (Monday to Friday 9:00 - 17:00) service@bluettipower.com

Customer Service(UK)

+44 8000472906 (Monday to Friday 9:00 - 17:00) service@bluettipower.com



@ BLUETTI Official



@ bluetti_inc



@bluetti.inc

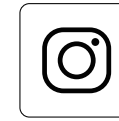

@bluetti.inc

Visit Us

SHENZHEN POWEROAK NEWENER CO., LTD.

19F, Block A, Kaidaer Bldg., No. 168 Tong Sha Rd, Shenzhen, China

BLUETTI Power Inc.

6185 S Valley View Blvd, Ste D, Las Vegas, NV 89118, US

EU REP

Company: POWEROAK GmbH

Address: Lise-Meitner-Str. 14 28816 Stuhr Germany

UK REP

Company: POWEROAK ENERGY UK CO.,LTD

Address: Unit 2 NorthGate, Bolsover Business Park, Woodhouse Lane

Chesterfield England, S44 6BD

À propos le Manuel

But

Ce manuel utilisateur décrit le installation, électrique connexion, mise en service, entretien et dépannage de RV5. S'il te plaît lire et comprendre tous instructions dans ce manuel avant utiliser.

Symbole Conventions

Cemanuel utiliser s le suivant symboles à souligner important information :

	**Danger** Il indique un dangereux situation lequel, si pas évité, volonté résultat dans la mort ou sérieux blessure.
	**Avertissement** Il indique un dangereux situation lequel, si pas évité, pourrait résultat dans la mort ou sérieux blessure.
	**Prudence** Il indique un dangereux situation lequel, si pas évité, pourrait résultat dans mineure ou modéré blessure.
	**Attention** Il indique une situation potentiellement dangereuse qui, si elle n'est pas évitée, pourrait cause substantiel dommage à propriété et le environnement.
	**Note** Il contient important supplémentaire information comme Bien comme utile conseils pour sûr, efficace et sans tracas opération de le RV5.

1. Sécurité Instructions

IMPORTANT SÉCURITÉ INSTRUCTIONS

SAUVEGARDER CES INSTRUCTIONS – Ce manuel contient important sécurité et en fonctionnement instructions pour RV5.

1.1 Général Instructions

1.1.1 Déclaration

Avant installation, en fonctionnement, ou maintenir ce unité, s'il te plaît lire ce manuel soigneusement et suivre tous sécurité précautions indiqué sur le unité et dans ce manuel. Regarder pour et suivre tous "Note", "Attention", "Prudence", "Avertissement", et "Danger" déclarations dans ce manuel. Le sécurité lignes directrices fourni ici faire pas couverture tous possible sécurité considérer Veuillez respecter toutes les normes internationales, nationales ou régionales pertinentes, ainsi que industrie pratiques. Notre entreprise devoir pas être responsable pour dégâts résultant depuis non-conformité ance avec ces sécurité exigences ou normes.

Pour problèmes ou opérations pas couvert dans ce manuel, s'il te plaît contact BLUETTI soutien, autre Nous ne sommes pas responsables des dommages ou blessures causés par des opérations non autorisées. Toujours considérer le réel sur place conditions quand en utilisant le unité. Utiliser il seulement dans environnements que rencontrer le exigences décrit dans ce manuel. Échec à faire donc peut cause équipement dysfonctionnements ou dommage, lequel sont pas couvert par le garantie. Notre entreprise est pas responsable pour n'importe lequel blessures ou propriété dommage causé par incorrect utiliser.

Ainsi, pour approprié installation et utiliser de ce unité, c'est crucial à adhérer à le suivant guide lignes:

1. Toujours fonctionner ou magasin le unité dans le conditions spécifié dans ce manuel.
2. PRUDENCE – À réduire risque de blessure, charge seulement LiFePO4 ou plomb-acide piles taper rechargeable piles . Autre types de piles peut éclatement causant personnel blessure et dommage.
3. Faire pas exposer le unité à pluie ou neige.
4. Utiliser de un pièce jointe pas recommandé ou vendu par nous peut résultat dans un risque de feu, électrique choc, ou blessure à personnes.
5. Faire pas démonter le RV5; prendre il à un qualifié militaire quand service ou réparation est requis. Incorrect remontage peut résultat dans un risque de électrique choc ou feu.
6. À réduire risque de électrique choc, débrancher le RV5 depuis le sortie avant tenter n'importe lequel entretien ou nettoyage. Tournant désactivé contrôles volonté pas éliminer ce risque.
7. Le installation et ambiant conditions doit se conformer avec le règlements dans le pertinent international, national ou régional normes.

8. Éviter non autorisé démontage, équipement modifications, ou logiciel code modifications.
9. Notre entreprise devoir aussi pas être responsable pour le suivant situations ou leur conséquences:

• Dommage causé par forcer majeure événements tel comme tremblements de terre, incendies, tempêtes, inondations, ou coulées de boue.
• Lié au transport dégâts pendant client manutention.
• Équipement dommage exigible à incorrect stockage conditions comme décrit dans le manuel.
• Matériel dommage ou données perte résultant depuis client négligence, incorrect utiliser, ou intentionnel dommage.
• Système dommage causé par troisième fêtes ou clients, y compris incorrect manutention ou installation pas dans doubler avec le manuels instructions.
• Dommage depuis ajustements, modifications, ou suppression de étiquettes pas autorisé dans le manuel.
• Utiliser de le unité dans environnements pas conforme avec pertinent international, national, ou régional normes.
• installation ou opération par non autorisé personnel.
• Utiliser de fourni par le client matériels ou outils que faire pas rencontrer locale légal exigences ou pertinent normes.



Attention

Suivre ces lignes directrices pour approprié utiliser.

• Ce unité est pas destiné pour utiliser avec appareils que avoir haute performance exigences pour UPS (Alimentation Sans Interruption), y compris mais pas limité à données serveurs, postes de travail, médical équipement, et similaire appareils. Notre entreprise devoir pas être responsable pour n'importe lequel données perte ou équipement dommage résultant depuis le violation de ce exigence.

1.1.2 Général Exigences

	Danger
	Suivre ces lignes directrices pour approprié utiliser.

1. Faire pas installer, utiliser, ou maintenir le unité dans négatif météo conditions tel comme foudre, pluie, neige, et fort brises (y compris manutention, en fonctionnement, bouchage et débrancher signal relations pour de plein air installations, fonctionnement à hauteurs, et de plein air installations).
2. Garder le unité loin depuis chaleur sources ou haut températures, et faire pas exposer il à direct soleil.
3. Faire pas faire le ménage le unité avec eau.
4. Régulièrement inspecter le unité et c'est accessoires pour signes de dommage ou détérioration.
5. Utiliser un testeur à vérifier pour dangereux tension avant touchant n'importe lequel conducteur ou Terminal.
6. Dans le événement de un feu, prioriser personnel sécurité. Si sûr à faire donc, immédiatement déconnecter pouvoir et utiliser un CO2, FM-200, ou abc sec poudre feu extincteur.
7. Si un feu se produit, ÉVACUER le affecté zone rapidement. Activer le le plus proche FEU ALARME système et CONTACT locale urgence services.
8. Faire pas magasin inflammable ou explosif matériels près le unité.
9. Maintenir un bien ventilé et spacieux installation zone.
10. Faire pas bloc ou couverture le unités ouvertures et évents.
11. Utiliser le unité seulement pour c'est destiné but et s'abstenir depuis empilement objets sur ou près il pendant stockage ou utiliser.
12. Faire pas se déplacer le unité pendant opération, comme vibrations et chocs depuis mouvement peut cause dommage.
13. Dans cas de mauvais fonctionnement, immédiatement pouvoir le unité désactivé et contact BLUETTI soutien ou ton locale BLUETTI revendeur si le manuel fait pas adéquatement expliquer le problème.
14. Monter le unité en toute sécurité sur un métal support, mur, ou écurie plate-forme à prévenir il depuis chute. Éviter placement il sur incliné surfaces.
15. Garder le unité dehors de le atteindre de enfants et animaux de compagnie.
16. Faire pas installer le unité où il peut être exposé à eau ou submergé.
17. Faire pas touche le unité quand c'est en cours d'exécution, comme le coquille peut devenir chaud et pose un risque de brûlures.



Note

Se conformer avec en vigueur lois et règlements.

• Quand manutention, installation, câblage, ou maintenir ce produit, se conformer avec le pays ou région légal règlements et normes.
• Utiliser matériels et outils que rencontrer en vigueur légal exigences et normes.
• Comprendre le opérationnel principes et normes pertinent à le énergie stockage système dans le emplacement.

1.2 Installation Safety



Danger

Suivre ces lignes directrices pour approprié utiliser.

1. Éviter fonctionnement avec en direct électrique composants.
2. Avant installation, double vérifier le unité pour n'importe lequel signes de dommage ou défauts à minimiser potentiel risques.
3. Faire bien sûr le unité et tous associé commutateurs sont tourné désactivé (pas dans dormir mode) à prévenir électrique choc.
4. Faire pas touche n'importe lequel Terminal alors que le unité est en cours d'exécution, comme il peut pose un risque de électrique choc.
5. Utiliser un testeur à vérifier pour dangereux tension avant touchant n'importe lequel conducteur ou Terminal.

1.2.1 Général Exigences

1. Après installation, retirer le inactif emballer matériels depuis le site tel comme carton, mousse, plastique, nylon liens, etc.
2. Garder personnes autre que le installateurs loin depuis le site.
3. Poignée le unité et accessoires soigneusement pendant transport; utiliser original ou protecteur paquet- ing.
4. Joint câblage ports en toute sécurité avec ignifuger et étanche matériels.
5. Faire pas modifier ou couverture équipement marquages ou plaques signalétiques.
6. Vérifier et faire bien sûr tous sûr gardes, y compris vis et étanche anneaux, sont dans lieu et correctement resserré.
7. Faire le ménage le unité et accessoires avec un doux tissu; éviter eau ou rude produits chimiques.
8. Faire pas faire n'importe lequel changements à le unités structure, installation séquence, ou

n'importe lequel autre aspects sans autorisation.

1.2.2 Forage Exigences

Quand forage trous dans le mur ou sur le sol, suivre ces sécurité mesures:

1. Porter lunettes de protection et protecteur gants à tous fois.
2. Bouclier le unité à prévenir débris depuis chute dans il, et retirer tous débris après forage.
3. Percer trous sur le unité est interdit comme il peut dommage le le unités électromagnétique blindage performance. Le métal copeaux peut cause court circuits sur le circuit conseil.
4. Faire bien sûr à vérifier pour n'importe lequel intégré tuyaux ou câbles avant forage à prévenir court circuits ou autre dangers.

1.2.3 Emplacement Exigences

1. Situer RV5 loin depuis batterie dans un séparé, Bien ventilé compartiment.
2. Jamais lieu appareil directement au-dessus de batterie; gaz depuis batterie volonté corroder et dommage appareil.
3. Jamais permettre batterie acide à goutte sur appareil quand en lisant pesanteur ou remplissage batterie.
4. Faire pas fonctionner appareil dans un fermé zone ou limiter ventilation dans n'importe lequel chemin.

1.3 Batterie Sécurité

1.3.1 Clause de non-responsabilité

Notre entreprise devoir pas être responsable pour équipement dysfonctionnements, composant dommage, personnel blessure, propriété perte, ou autre problèmes causé par:

- En utilisant endommagé ou modifié batterie paquets ou appareils.
- En utilisant batterie types pas spécifié dans le manuel ou piles avec non pris en charge tension.
- Défaut à suivre le batterie utilisateur manuel pour approprié utiliser et manutention.
- Incorrect batterie opérationnel paramètres.
- Court circuits, dommage, gouttes, ou fuites exigible à incorrect utiliser ou relations.

1.3.2 Général Exigences

1. AVERTISSEMENT – RISQUE DE EXPLOSIF GAZ.
2. PRUDENCE – FONCTIONNEMENT DANS ENVIRONS DE UN PLOMB-ACIDE BATTERIE EST DANGEREUX. PILES GÉNÈRE DES GAZ EXPLOSIFS PENDANT LE FONCTIONNEMENT NORMAL DE LA BATTERIE. POUR CELA RAISON, IL EST DE MAXIMUM IMPORTANCE QUE CHAQUE TEMPS AVANT ENTRETIEN LE UNITÉ DANS À PROXIMITÉ DE LA BATTERIE, VOUS LISEZ CE MANUEL ET SUIVEZ LES INSTRUCTIONS EXACTEMENT.
3. À réduire risque de batterie explosion, suivre ces instructions et ceux publié par batterie fabricant et fabricant de n'importe lequel unité toi avoir l'intention à utiliser dans environs de batterie. Revoir de précaution marquage sur ces produits et sur moteur.

4. Ce unité est destiné à recharger piles. Le batterie que est connecté à ce produit est seulement approprié si il conforme avec le donné batterie standard pour que batterie taper et est fourni avec un batterie gestion système que volonté moniteur et contrôle le électrique et thermique santé de le batterie pendant charge. Quand installation ce appareil, le batterie est à être vérifié comme dans conformité avec le en vigueur batterie standard.
5. ATTENTION – Il est recommandé d'utiliser les batteries fournies par BLUETTI. Non vérifié, endommagé, ou modifié piles peut pose feu, explosion, ou blessure risques. Si en utilisant un tierce personne batterie, suivre c'est utilisateur manuel pour approprié utiliser et entretien.
6. Si le batterie a Non intégré protection caractéristiques, installer un correctement noté fusible ou DC circuit briseur à le Terminal.
7. Utiliser court batterie câbles à minimiser chaleur s'accumuler et améliorer performance.
8. AVERTISSEMENT -Jamais inverse le batteries positif et négatif terminaux. Dommage causé par incorrect connexion est pas couvert sous garantie.
9. Pour marin utiliser, paire ce unité avec Epad ou n'importe lequel compatible tension et actuel surveillance appareil à piste le charge processus.

1.3.3 Personnel Précautions

1. Quelqu'un devrait être dans gamme de ton voix ou fermer assez à viens à ton aide quand toi travail près un plomb-acide batterie.
2. Avoir beaucoup de frais eau et savon proche dans cas batterie acide contacts peau, vêtements, ou yeux.
3. Porter complet œil protection et vêtements protection. Éviter touchant yeux alors que fonctionnement près batterie.
4. Si batterie acide contacts peau ou vêtements, laver immédiatement avec savon et eau. Si acide entre yeux, rincer immédiatement les yeux à l'eau froide courante pendant au moins 10 minutes et consulter un médecin attention immédiatement.
5. JAMAIS fumée ou permettre un étincelle ou flamme dans environs de batterie ou moteur.
6. Être supplémentaire prudent à réduire risque de goutte un métal outil sur batterie. Il pourrait étincelle ou court-circuit batterie ou autre électrique partie que peut cause explosion.
7. Retirez vos objets personnels en métal tels que bagues, bracelets, colliers et montres lorsque fonctionnement avec un plomb-acide batterie. UN plomb-acide batterie peut produire un court-circuit actuel haut assez à souder un anneau ou le comme à métal, causant un grave brûler.
8. JAMAIS charge un congelé batterie.
9. Si nécessaire à retirer batterie depuis navire, toujours retirer fondé Terminal depuis batterie d'abord. Faire bien sûr tous accessoires dans le navires sont désactivé, donc comme pas à cause un arc.
10. Être bien sûr zone autour batterie est Bien ventilé.

11. Faire le ménage batterie terminaux. Être prudent à garder corrosion depuis à venir dans contact avec yeux.
12. Étude tous batterie du fabricant spécifique précautions tel comme suppression ou pas suppression cellule casquettes alors que charge et recommandé tarifs de charge.
13. Ajoutez de l'eau distillée dans chaque cellule jusqu'à ce que l'acide de la batterie atteigne le niveau spécifié par la batterie fabricant. Ce aide purge excessif gaz depuis cellules. Faire pas déborder. Pour un batterie sans cellule casquettes, soigneusement suivre du fabricant recharger instructions.

1.3.4 DC Connexion Précautions

1. Connecter et déconnecter batterie relations seulement après paramètre n'importe lequel appareil commutateurs à désactivé position et suppression CA corde depuis électrique sortie ou ouverture CA déconnecter.
2. EXTERNE RELATIONS À CHARGEUR DEVOIR SE CONFORMER AVEC LE UNI ÉTATS CÔTE GARDE ÉLECTRIQUE RÈGLEMENTS (33CFR183, SOUS PARTIE JE).

1.4 Électrique Sécurité

1.4.1 Général Exigences

1. Assurer tous électrique relations se conformer avec national/régional électrique normes.
2. Fourni par l'utilisateur câbles devrait rencontrer locale légal exigences.
3. Utiliser spécialisé isolé outils pour électrique travail.

1.4.2 Mise à la terre Exigences

1. Avant en fonctionnement le unité, toujours confirmer que il est correctement fondé à réduire le risque de électrique choc.
2. Prendre soins pas à dommage le mise à la terre conducteur.
3. Relations à unité devrait se conformer avec tous locale codes et ordonnances.
4. Selon à IEC62109-1 lignes directrices, si le sol fil est endommagé ou déconnecté, connecter un protecteur sol fil à assurer sûr utiliser de le unité. Assurer le sol fil rencontre à moins un de ces critères:

a. Utiliser un monocœur de plein air cuivre câble avec un conducteur transversale zone de ≥10 mm2 si le éducation physique Terminal dans le CA connecteur est pas connecté.
b. Utiliser câbles avec le même fil diamètre comme le CA sortir câbles, mise à la terre les deux le éducation physique Terminal dans le CA connecteur et le châssis mise à la terre vis séparément.

1.4.3 Câblage Exigences

1. Garder câbles à moins 1,18 pouces (30 mm) loin depuis chaleur sources et appareils que émettre chaleur, comme haut températures peut cause isolation à âge ou devenir endommagé.
2. Paquet câbles de similaire types ensemble à réduire électromagnétique ingérence. Garder

différent types de câbles à moins 1,18 pouces (30 mm) à part et éviter torsion ou passage eux.
3. Tous câble doit être en toute sécurité connecté, bien isolé, et de approprié caractéristiques.
4. Prendre nécessaire mesures à protéger câbles quand passage à travers tuyaux ou trous.
5. dans froid températures, grave impacts ou vibrations peut cause le plastique revêtement de câbles à devenir fragile et fissure. À assurer sûr installation:
a. Poser et installer tous câbles à températures au-dessus de 0°C (0°C). Poignée câbles avec soins, en particulier quand fonctionnement dans froid environnements.
b. Si câbles avoir a été stocké dans températures ci-dessous 0°C (0°C), magasin eux à chambre détrempe- ture pour à moins 24 heures avant installation.

1.5 Manutention Exigences

Tableau 1-1 Recommandé Nombre de Personnes Basé sur le Poids de Produit

Poids	Nombre de Personnes
<18 kg (39,7 livres)	1
18 kg à 32 kg (39,7 lb-70,5 lb)	2
32 kg à 55 kg (70,5 lb-121,3 lb)	3
>55 kg (121,3 lb)	4 ou un chariot

Conformité

• Déclaration de la FCC

Cet appareil est conforme à la partie 15 des règles de la FCC. L'exploitation est autorisée aux deux conditions suivantes :

(1) L'appareil ne doit pas produire de brouillage nuisible.

(2) L'appareil doit accepter tout brouillage subi, même si le brouillage est susceptible d'en compromettre le fonctionnement.

Cet équipement a été testé et jugé conforme aux limites d'un appareil numérique de classe B, conformément à la partie 15 des règles de la FCC. Ces limites sont conçues pour fournir une protection raisonnable contre les brouillages nuisibles dans une installation résidentielle. Cet équipement génère, utilise et peut émettre de l'énergie radiofréquence et, s'il n'est pas installé et utilisé conformément aux instructions, peut provoquer un brouillage nuisible pour les communications radio. Il n'existe toutefois aucune garantie qu'aucun brouillage ne se produise dans une installation particulière. Si cet équipement provoque des brouillages nuisibles pour la réception radio ou télévision, ce qui peut être déterminé en éteignant et en rallumant l'équipement, il est recommandé d'essayer de corriger le brouillage par une ou plusieurs des mesures suivantes :

- Réorienter ou déplacer l'antenne de réception.
- Augmenter la séparation entre l'équipement et le récepteur.
- Brancher l'équipement sur une prise d'un circuit différent de celui sur lequel le récepteur est branché.
- Consulter le revendeur ou un technicien radio/TV expérimenté pour obtenir de l'aide.

Mise en garde de la FCC : Tout changement ou modification non expressément approuvé par la partie responsable de la conformité pourrait annuler l'autorité de l'utilisateur à utiliser cet équipement.

REMARQUE IMPORTANTE : Déclaration de la FCC sur l'exposition aux radiations

Cet équipement est conforme aux limites d'exposition aux rayonnements de la FCC définies pour un environnement non contrôlé. Cet équipement doit être installé et utilisé avec une distance minimale de 20 cm entre le radiateur et votre corps.

• Mise en garde d'IC

L'émetteur/récepteur exempt de licence contenu dans le présent appareil est conforme aux CNR d'Innovation, Sciences et Développement économique Canada applicables aux appareils radio exempts de licence. L'exploitation est autorisée aux deux conditions suivantes :
(1) L'appareil ne doit pas produire de brouillage;
(2) L'appareil doit accepter tout brouillage radioélectrique subi, même si le brouillage est susceptible d'en compromettre le fonctionnement.

Déclaration d'exposition aux RF : L'équipement est conforme aux limites d'exposition aux rayonnements IC définies pour les environnements non contrôlés. Cet équipement doit être installé et utilisé avec une distance minimale de 20 cm entre le radiateur et votre corps.

CAN ICES (B)/NMB(B) (Canada)
Cet appareil numérique de classe B est conforme à la norme canadienne ICES-003.

BLUETTI

Certificate

Inspector: _____

QC: _____

Just Power On

P/N:17.0303.0898-00