OWNER'S MANUAL
11" 10-Amp Corded Electric Tiller / Cultivator

Copyright All Rights Reserved.

Model TC70010-1 | SKU# 270-2453

US
244026

WARNING: To reduce the risk of injury, the user must read and understand the owner's manual before using this product.

Thank you for your purchase.

DO NOT RETURN THIS PRODUCT TO THE STORE. OPERATING, ASSEMBLY, PART, SERVICE QUESTIONS? GO TO AMERICANLAWNMOWER.COM OR CALL 1-800-633-1501. BETWEEN 8 AM – 5 PM EST, MONDAY-FRIDAY FOR ASSISTANCE.

SAVE THIS MANUAL FOR FUTURE REFERENCE

TABLE OF CONTENTS

Product Specifications 2
Symbols 3
Safety Warnings . . . . . .4 - 5
Assembly . . . . . .6 - 7
Operating . . . . . .8 - 9
Maintenance. 10
Storage 11
Troubleshooting 11
Warranty 12

PRODUCT SPECIFICATIONS

Model: TC70010-1

Power supply voltage:	120V-60HZ	Working width:	7-IN or 11-IN
Tine Speed:	350 RPM	Working depth max:	8-IN
Power Consumption:	10 Amp		

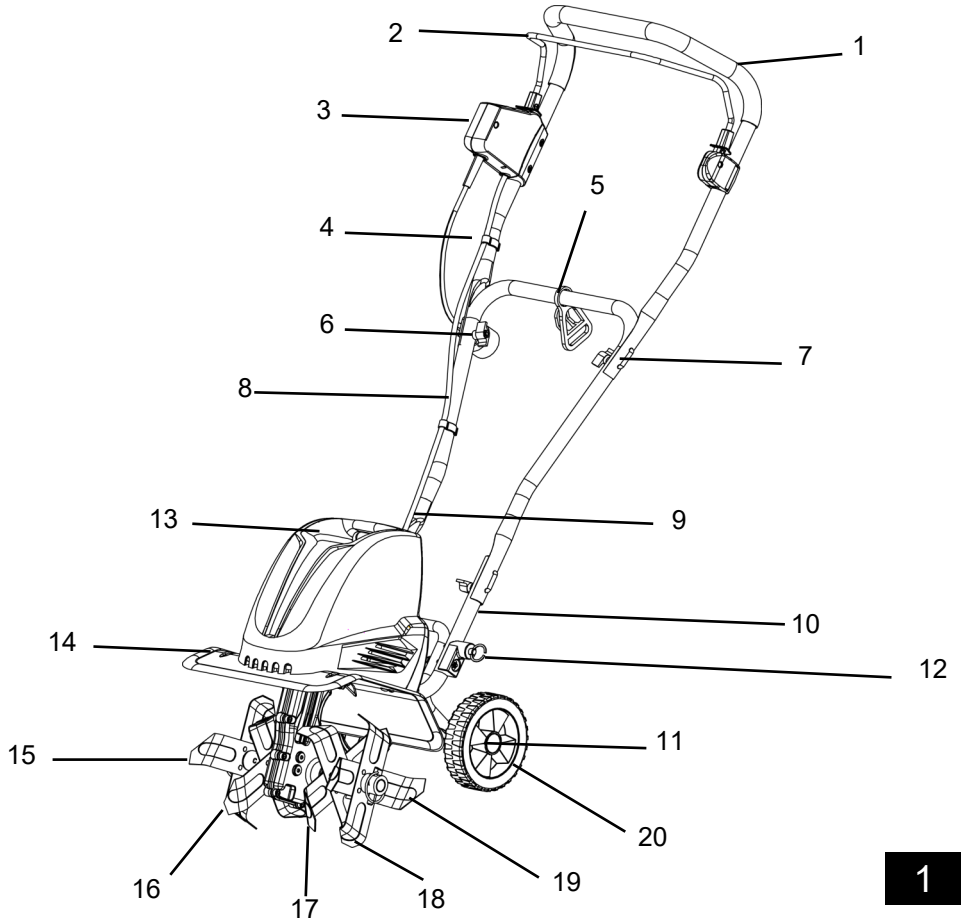

1

No.	Description (P/N)	No.	Description (P/N)
1	Upper handle section (RTC70010-01)	11	Wheel hub cap (RTC70010-60)
2	Bail wire (RTC70010-17)	12	Wheel frame lock pin (RTC70010-10)
3	Switch box and power cable assembly (RTC70010-02)	13	Motor housing (RTC70010-22)
4	Cable clip (RTC70010-03)	14	Protective shield (RTC70010-33)
5	Cord retainer (RTC70010-04)	15	Tine assembly, D (RTC70010-42)
6	Wing nut (RTC70010-05)	16	Tine assembly, C (RTC70010-43)
7	J-bolt M6 (RTC70010-06)	17	Tine assembly, B (RTC70010-55)
8	Center handle section (RTC70010-07)	18	Tine Assembly, A (RTC70010-50)
9	Lower handle section - II (RTC70010-16)	19	Tine lock pin (RTC70010-50)
10	Lower handle section - I (RTC70010-09)	20	Wheel (RTC70010-62)

SYMBOLS

Some of the following symbols may be used on this product. Please study them and learn their meaning. Proper interpretation of these symbols will allow you to operate the product better and safer.

Precautions that involve your safety.

Read the instruction manual and follow the warning and safety instructions!

SWITCH OFF! Remove plug from outlet immediately if the cable is damaged or cut.

SWITCH OFF! Remove plug from outlet before cleaning or maintenance.

Do not use in wet weather conditions.

Wear eye and ear protection.

Keep bystanders at a safe distance.

DANGER! Rotating blades. Keep hands and feet at a safe distance.

DANGER! Of being hit by thrown objects.

Waste electrical products should not be disposed of with household waste. Please recycle where facilities exist. Check with your Local Authority or retailer for recycling advice.

IMPORTANT SAFETY WARNINGS

TO REDUCE RISK OF INJURY: Before any use be sure everyone using this product reads and understands all safety instructions and other information contained in this manual.

CAUTION: Wear appropriate personal hearing protection during use. Under some conditions and duration of use, noise from this product may contribute to hearing loss.

Save these instructions and review frequently prior to use and in instructing others.

WARNING: When using electric gardening appliances, basic safety precautions should always be followed to reduce risk of fire, electric shock, and personal injury, including the following:

READ ALL INSTRUCTIONS

GENERAL SAFETY

CHECK FOR DAMAGED PARTS - Before further use of the product, any part that is damaged should be carefully checked to determine that it will operate properly and perform its intended function. Check for alignment of moving parts, binding of moving parts, breakage of parts, mounting and any other condition that may affect its operation. Any part that is damaged should be properly repaired or replaced. For assistance call our customer service help line at 1-800-633-1501.

AVOID DANGEROUS ENVIRONMENTS - Don't use this product in rainy, stormy, damp or wet locations. Do not operate in gaseous or explosive atmospheres. Motors in these products normally spark, and the sparks might Ignite fumes.

KEEP CHILDREN AWAY - All visitors, children and pets should stay at a safe distance from the work area.

DRESS PROPERLY- Don't wear loose clothing or jewelry and wear protective hair covering to contain long hair. They can be caught in moving parts. Use of rubber gloves and substantial footwear is recommended when working outdoors.

USE SAFETY GLASSES - Wear safety glasses with side shields or goggles that are marked to comply with ANSI Z87.1 standard when operating this product. Use face or dust mask if environment is dusty.

DOUBLE INSULATION – The tiller/cultivator has double insulation. This means that all external metal parts are insulated from the electrical supply. This is achieved by introducing an insulation layer between electrical and mechanical parts. The double insulation guarantees you the greatest possible safety.

EXTENSION CORD. Make sure your extension cord is in good condition. When using an extension cord be sure it is heavy enough to carry the current your product will draw. An undersized extension cord will cause a drop in line voltage resulting in loss of power and overheating. The following table shows the correct size to use depending on cord length and nameplate ampere rating. If in doubt, use the next heavier gage. The smaller the gage number, the heavier the cord.

WARNING: Use outdoor extension cords marked

Minimum Gage for Cord Sets						
Volts			Total Length of cord in Feet			
120V			0-25	26-50	51-100	101-150
Ampere Rating More Than		Not More Than	American wire Gage			
0	-	6	18	16	16	14
6	-	10	18	16	14	12
10	-	12	16	16	14	12
12	-	16	14	12	Not Recommended	

SW-A, SOW-A, STW-A, STOW-A, SJW-A, SJTW-A, or SJTOWA. These cords are rated for outdoor use and reduce the risk of electric shock.

It is possible to tie the extension cord and power cord in a knot to prevent them from becoming disconnected during use. Make the knot as shown, then connect the plug end of the power cord into the receptacle end of the extension cord. This method can also be used to tie two extension cords together.

Be aware of the extension cord while operating the tiller/cultivator. Be careful not to trip on the cord. Always guide the cord away from the tines.

OVERHEAT PROTECTION - If the tiller/cultivator is blocked by a foreign object or if the motor is overloaded, the motor will switch off automatically by the protection device. Release the trigger lever and wait for the motor to cool down (approx. 15 minutes) before starting the tiller again.

GENERAL SAFETY

GROUND FAULT CIRCUIT INTERRUPTER (GFCI) protection should be provided on the circuit or outlet to be used for the tiller/cultivator. Receptacles are available having built-in GFCI protection and may be used.

DISCONNECT UNIT from the power supply when not in use or when servicing or cleaning. Do not leave unattended.

DON'T ABUSE CORD - Never carry this product by the cord or yank the cord to disconnect from the receptacle. Keep cord from heat, oil, and sharp edges.

USE RIGHT APPLIANCE - Do not use this product for any job except that for which it is intended.

DON'T OVERREACH - Guide the tiller/cultivator at a walking pace only. Keep proper footing and balance at all times.

LIGHTING - Only operate your tiller/cultivator in daylight or good artificial light.

STORE IDLE UNIT INDOORS-When not in use, the tiller/cultivator should be stored indoors in a dry area out of children's reach.

MAINTAIN UNIT WITH CARE-Keep clean for best performance and to reduce the risk of injury. Inspect extension cord periodically and replace if damaged. Keep handles dry, clean and free from oil.

POLARIZED PLUGS-To reduce the risk of electric shock, this product has a polarized plug. Polarized connections will fit together only one way. Make sure that the receptacle end of the extension cord has large and small blade slot widths. If the plug does not fit fully into the extension cord, reverse the plug. If it still does not fit, obtain a suitable extension cord. If the extension cord does not fit fully into the outlet, contact a qualified electrician to install the proper outlet. Do not change the plug on the tool or the extension cord in any way.

Do not operate the tiller/cultivator on a slope that is too steep for safe operation. When on slopes, slow down and make sure you have good footing.

Before starting the tiller/cultivator make sure the times are not touching any object and are free to move.

Grip the guide bar firmly with both hands. Never operate the tiller/cultivator with one hand.

CAUTION: The tiller/cultivator may bounce upward and/or jump forward if the tines strike extremely hard packed soil, frozen ground, or buried obstacles such as large stones, roots or stumps.

STAY ALERT - Watch what you are doing. Use common sense. Do not operate the tiller/cultivator when you are tired or under the influence of drugs or medication.

WARNING: Do not operate the tiller/cultivator near underground electrical cables, telephone lines, pipes or hoses.

If the tiller/cultivator strikes a foreign body, turn it off immediately, wait for the tines to stop and check for damage. If necessary, repair before restarting.

If the tiller/cultivator starts to vibrate abnormally, turn it off immediately and check for the cause. Vibration is generally a warning of trouble.

DANGER: RISK OF CUT - Wear gloves and use caution when cleaning or performing maintenance on the tiller/cultivator.

Always turn off the tiller/cultivator, disconnect from the power supply and wait until the tines come to a complete stop before carrying out any maintenance or repairs.

CAUTION: Tines do not stop immediately after the tiller/cultivator is turned off.

CAUTION: Risk of injury. Do not put hands, feet or any body part or clothing near the rotating tines.

WARNING: California Proposition 65:
This product contains chemicals known to the State of California to cause cancer, birth defects or other reproductive harm.

WARNING: Cancer and Reproductive Harm - www.P65Warnings.ca.gov.

WARNING: Some dust and debris created by the use of this tool could contain chemicals known to the State of California to cause cancer and birth defects or other reproductive harm.
Some examples of these chemicals are:
- chemicals in fertilizers
- compounds in insecticides, herbicides, and pesticides
- arsenic and chromium from chemically treated lumber

Your risk from exposure to these chemicals varies, depending on how often you do this type of work. To reduce your exposure, work in a well-ventilated area and with approved safety equipment such as dust masks that are specially designed to filter out microscopic particles.

ASSEMBLY

This product must be assembled correctly before use.

1. Remove the screws (M5 X 12) and washers from each end of the wheel frame axle. Assemble the wheels onto the axle, then install washers and screws (M5 X 12) to secure. (Fig. 2-1)
2. Press the hub caps into the wheels and cover the ends of the axles. You may use a hammer to seat them securely into the wheels. (Fig. 2-1)
3. To lower wheel frame, push the lock button on back of motor housing to release the frame (Step A). Lower the wheel frame (Step B) and pull out the lock pin on lower handle section (Step C). Align lock pin to the hole in wheel frame then release it to lock the wheel frame in position. (Fig. 2-2)
4. Slide the cord retainer onto the center handle section. (Fig. 2-3)
5. Attach the center handle section to the lower handle sections using the two supplied M6 J-bolts and wing nuts. (Fig. 2-4)
6. Fasten the upper handle section to the center handle section using the two supplied M6 J-bolts and wing nuts. (Fig. 2-5)
7. Use the two supplied cable clips to secure the cord to the handle. (Fig. 2-6)

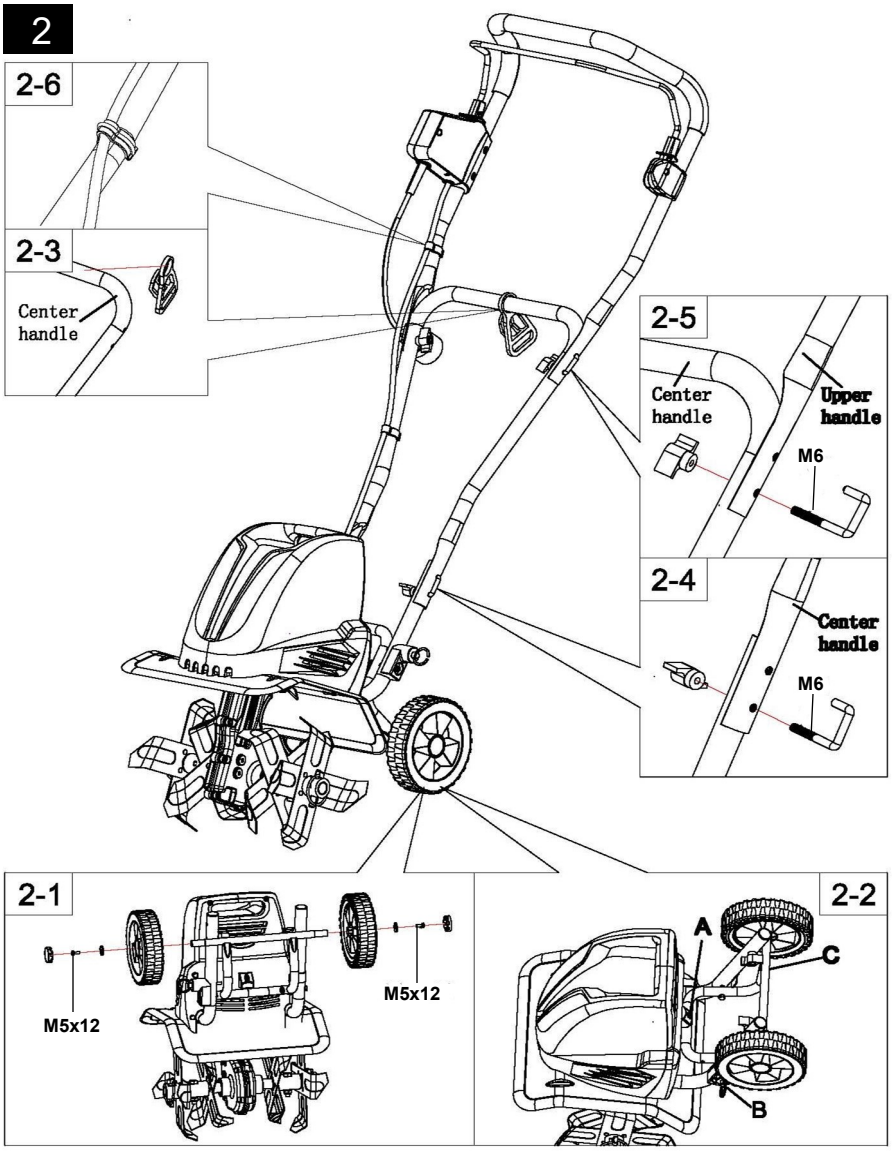

WARNING: If any parts are damaged or missing do not operate this product until the parts are replaced. Failure to heed this warning could result in serious personal injury. Call our customer service help line at 1-800-633-1501 for assistance.

WARNING: Do not connect to power supply until assembly is complete. Failure to comply could result in accidental starting and possible serious personal injury.

WARNING: Do not attempt to modify this product or create accessories not recommended for use with this product. Any such alteration or modification is misuse and could result in a hazardous condition leading to possible serious personal injury.

ADJUSTABLE TINE ASSEMBLY INSTRUCTION

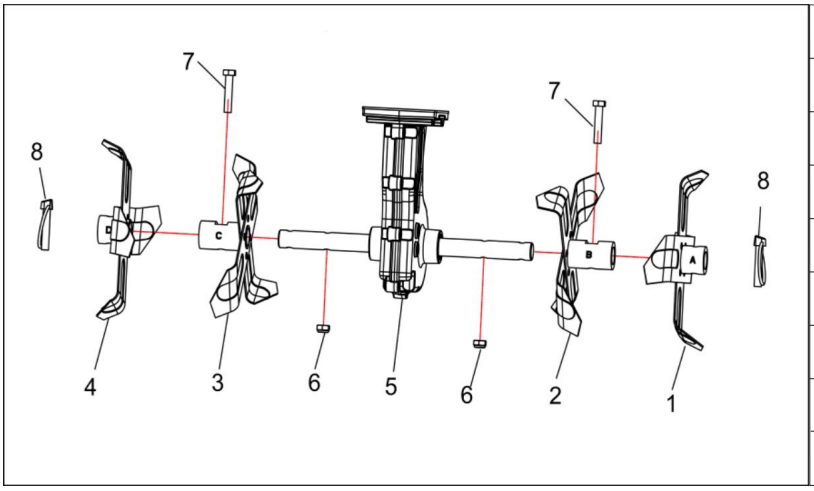

NO.	Description	QTY
1	Tine A	1
2	Tine B	1
3	Tine C	1
4	Tine D	1
5	Transmission case assy	1
6	Hex lock nut M8	2
7	Hex head bolt M8 x 40	2
8	Lock pin ∅8	2

Tines are identified (A,B,C,D) with letters stamped into the Tine Hubs.

CHANGE FROM FOUR TINES TO TWO TINES

Lift the Lock Pin rings and remove Lock Pins at both ends of the shaft. Remove Tine A and D from the shaft. (Fig. 3)

CHANGE FROM TWO TINES TO FOUR TINES

Install Tine A and D onto the shaft as shown. Ensure holes in Tine Hubs and shaft are aligned. Insert Lock Pin into the through holes and pull Lock pin ring downward to lock the Pin into place. Be sure to install Tines as shown in Fig 3. Tines cannot be secured if assembled in other sequence of Tine position. (Fig. 3)

3

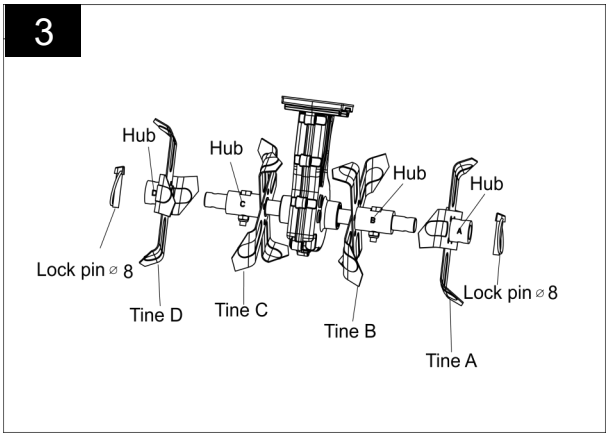

In the event the lock Pins are lost or misplaced, Tines A and D may be secured using the extra M8X40 Hex head bolts and M8 Lock nuts provided. (Fig. 4)

4

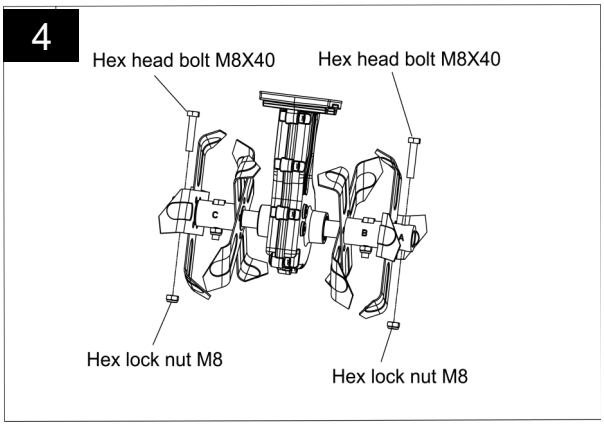

⚠ **WARNING:** Before adjusting tine assembly, disconnect power supply. Failure to heed this warning could result in serious personal injury.

STARTING:

Make sure the wheel frame is raised before you start the tiller. To raise the frame, pull out the lock pin (Step A); rotate the wheel frame upward, so that it snaps beneath the lock button on the back of the motor housing (Step B); release the lock pin. The wheel frame will be locked in place by the lock button. (See Fig. 5)

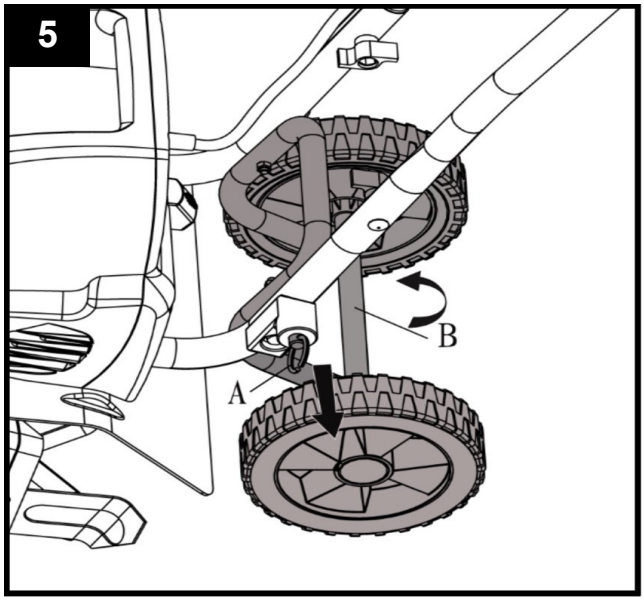

Secure the extension cord into the cord retainer. The loop of the extension cord must be long enough for the cord retainer to freely slide from one side to the other. Plug the extension cord into the power cord plug on the tiller. (See Fig. 6)

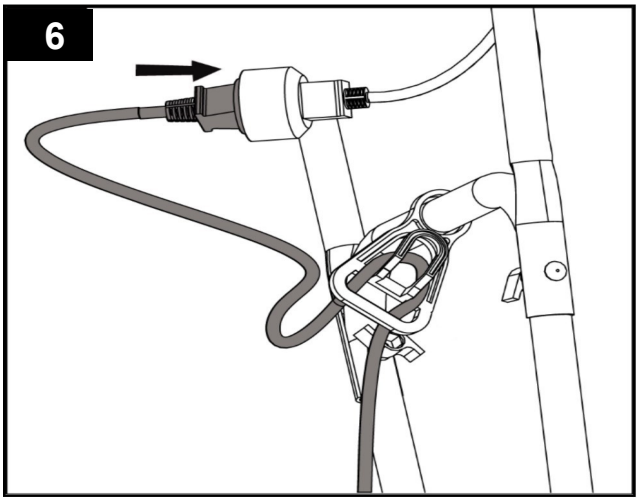

Move the tiller/cultivator to the work area prior to starting the motor.

⚠ **WARNING:** Do not start tiller with any person or object directly in its path.

Hold the tiller/cultivator firmly while starting. The tines will pull the tiller/cultivator forward during operation. Lower the tines slowly into the ground being tilled.

To start the tiller/cultivator, grip the center of the handle firmly with your left hand. Using your right hand, push the safety lock button on the switch box and hold to allow activation of the switch control bail wire. (See Fig. 7)

Use your left thumb and index finger to maintain a firm grip on the handle, and with remaining fingers pull the switch control bail wire toward the handle. (See Fig. 8) Once the unit has started, release the safety lock button.

Continue to hold the switch control bail wire against the tiller handle as you cultivate. Use both hands to firmly grip the handle to provide better control. (See Fig. 9)

To stop the tiller/cultivator simply release the bail wire.

Use the tiller/cultivator for breaking sod, preparing seed beds, and for cultivating gardens and flower beds. The tiller/cultivator can also dig small holes for planting saplings or potted plants.

For breaking sod or deep tilling, allow the tines to pull the tiller/cultivator forward to the end of your arm's reach, then firmly pull it back toward yourself. You will achieve the best results by repeatedly allowing it to move forward and pulling it back.

By pulling the tiller/cultivator back towards yourself, the tines will dig deeper and more aggressively.

To prevent tripping, take extra precautions when moving backwards and when pulling the tiller/ cultivator back toward yourself.

If the tiller/cultivator digs deep enough to stay in one spot, gently rock it side to side until it starts moving forward again.

Never pass the tiller/cultivator over the extension cord. Make sure the cord is always in a safe position behind you.

When working on inclines always stand diagonally to the incline to retain a firm, safe footing. Do not work on extremely steep slopes.

For preparing seed beds, we recommend using one of these tilling patterns:

Tilling Pattern A– Make two passes over area to be tilled, the second at a right angle to the first.

Tilling Pattern B– Make two passes over area to be tilled, the second overlapping the first.

Before use, remove any visible stones or other foreign bodies from the area.

CAUTION: Before moving the tiller/cultivator from one area to another switch off the motor and wait for the tines to come to a complete stop. Be careful not to let the tines touch the ground while moving the tiller/ cultivator. The tines as well as the unit itself may be damaged even if the motor is switched off.

Clearing foreign objects:
During operation a stone or root could become lodged in the tines, or tall grass or weeds may become wrapped around the tine shaft. To clear the tines or tine shaft release the trigger lever, wait for the tines to come to a complete stop and unplug the tiller/ cultivator. Dislodge or remove the foreign matter from the tines or tine shaft. To simplify removal of tall grass or weeds from the tine shaft, remove one or more of the tines. See Tine Removal and Installation.

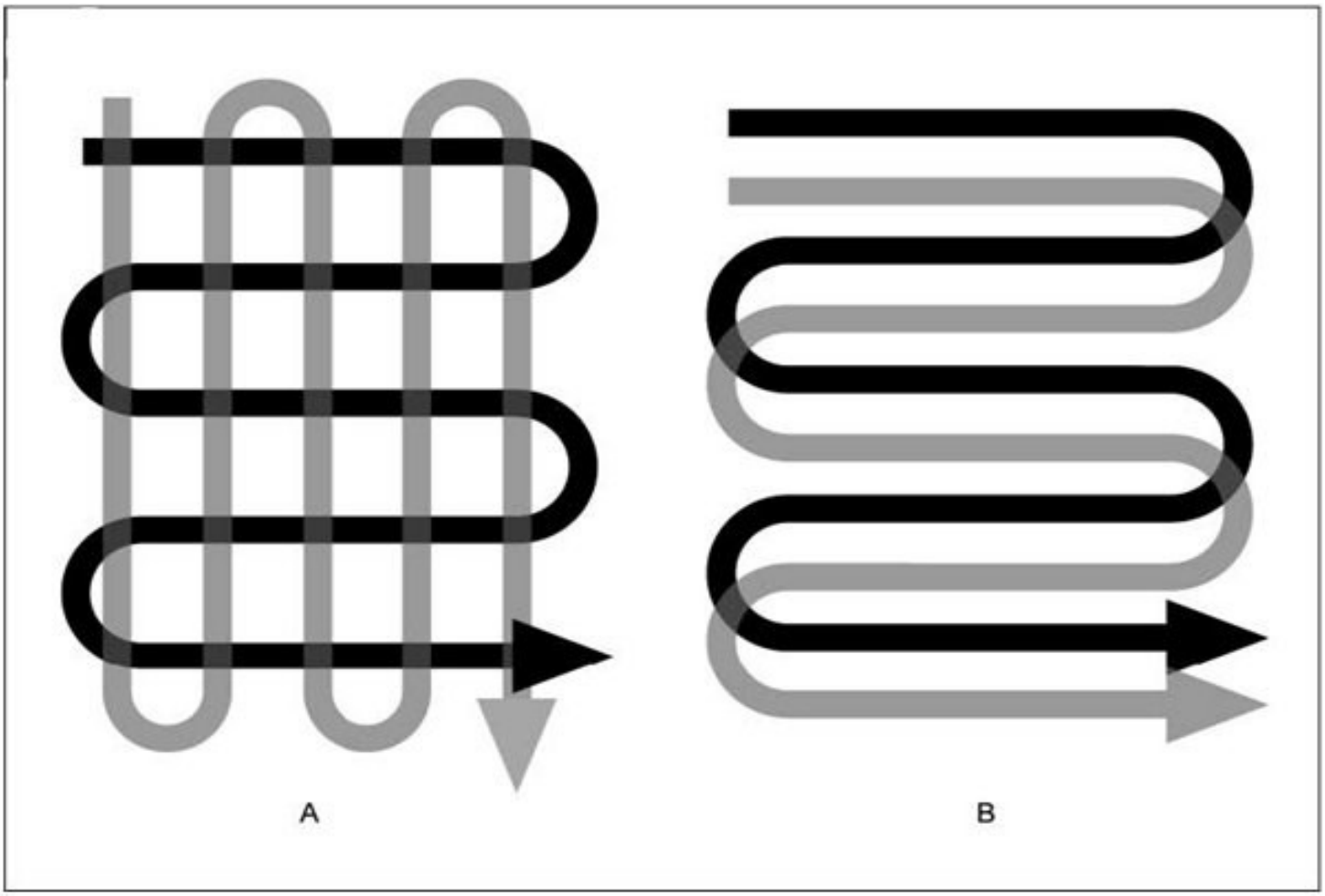

WARNING: Before carrying out maintenance operations, disconnect power supply.

Before each use check the extension cord for signs of damage or ageing. Replace the cable if it is cracked, split or otherwise damaged. Check the condition of the tines and ensure that all threaded connections are securely tightened. If the tines become dull or blunt, sharpen or replace them. Call our customer service help line at 1-800-633-1501 for assistance.

Once per season lubricate the tines and shaft. At the end of the season, check the tiller/cultivator for damage prior to storing. Repair or replace damaged or broken parts.

CAUTION: Always clean the tiller/cultivator after each use. Failure to carry out proper cleaning can result in damage to the tiller/cultivator or result in poor performance.

Clean the underside of the motor support plate and housing around the tines with a scrub brush, and a soft cloth dampened with a mild soap and water mixture. **Never use a water hose to clean the tiller!** To remove soil and debris from the transmission and tines, use a stiff brush or a dampened cloth. Clean the vents on the motor housing and remove any remaining grass or dirt. Once cleaned, wipe the tines and shaft dry and apply a light coat of oil to prevent rust.

Tines maintenance: Worn tines invite poor performance and overload of the motor. Check tines before each use. Sharpen or replace the tine assemblies with new ones when necessary. Call 1-800-633-1501 for assistance.

WARNING: Injury can occur while working on the tines. Wear protective gloves.

Tine Removal and Installation (Fig. 10)
Lift the Lock Pin rings and remove the Lock Pins at both ends of the shaft. Remove Tine A and D from the shaft. Remove the M8x40 bolts and M8 Hex lock nuts at both ends of the shaft. Remove Tine B and C from the shaft. Reverse above steps to install Tines.

Replace worn or damaged parts with original replacement parts only. Parts from another tiller/cultivator may not fit properly causing an unsafe situation.

Make sure all protective devices are secure and in good condition. Repair or replace if necessary.

Lubrication (Fig. 11)**:** The tines drive transmission case has grease installed at the factory. It is not required that the grease level be checked nor recommended that grease be added during the first 2 years of use. After the second season of use, follow the directions as described below:
Drain screw plugs are located on the right side of

11

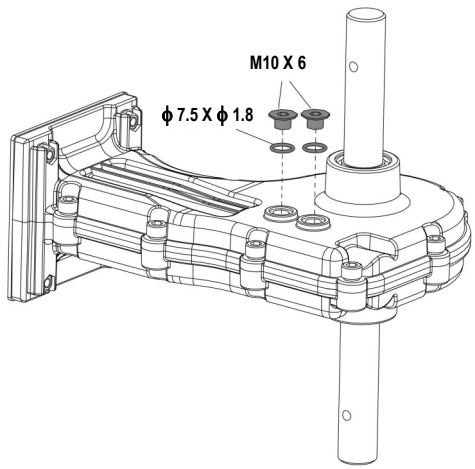

transmission housing. Lay the tiller/cultivator on its left side and clean the transmission of dirt and debris prior to removing the drain screw plugs. If necessary, remove tine assemblies to have better access to the drain screw plug. Use a 5mm hex key to unscrew the plugs.

Using a squeeze bottle or tube, add approximately 2.4 oz. (70ml) of auto gear lube. Do not overfill. When completed, reinstall both drain screw plugs into the transmission.

10

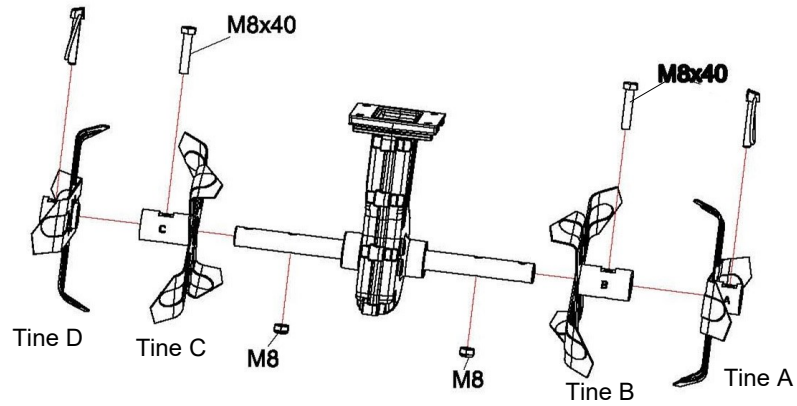

STORAGE

Store the Tiller/Cultivator in a dry, clean area out of reach of children.

During extended periods of storage, ensure that the tiller/cultivator is protected against corrosion and rust.

At the end of the season, or if the tiller/cultivator is not being used for longer than a month, wipe over all metal surfaces with an oil impregnated cloth to protect them from corrosion or spray with a fine coat of oil. Fold the upper handle down, and store the tiller/cultivator in a suitable place.

TROUBLESHOOTING

Problem	Possible causes	Remedy
Motor does not start	Unit not plugged in	Plug in the unit
	No electricity	Check power supply
	Defective cable	Check cable. Repair or replace if required
	Defective safety switch/plug	Arrange for repair
	Overheat protection activated	1. Working depth too large, set to a shorter depth. 2. Blades blocked, remove the blockage. 3. Soil too hard, select correct work depth and move forward and backward several times while slowing down the operation speed. Wait until the motor cools down for about 15 minutes before further use.
Abnormal noises	Blade is jammed	Switch off . Wait till tines comes to a complete stop. Remove jammed objects.
	Lubrication running out	Tiller/cultivator must be repaired. Call our customer service help line at 1-800-633-1501 for assistance.
	Bolts, nuts or other components are loose.	Tighten all components. Arrange for repair if noises continue.
Abnormal vibrations	Blades damaged or worn	Replace damaged or worn blades.
	Working depth too large	Set to correct working depth.
Poor results	Working depth too small	Set to correct working depth.
	Worn blades	Replace damaged or worn blades.

PARTS AND SERVICE

For parts or service, please call 1-800-633-1501 or visit us online at americanlawnmower.com. Be sure to provide all relevant information when you call or visit.

REPAIR PARTS (KITS/ ITEMS)

The model/ serial number of this tool is found on a plate or label attached to the housing. Please record the serial number in the space provided below.

MODEL NUMBER__**TC70010-1**____

SERIAL NUMBER_____

Always mention the model number when ordering kits/items for this tool.

No.	Kit/Item Number	Description	QTY
1	RTC700SET-adj	Tine Kit	1
2	RTC10/16-U	Upper Handle Kit	1
3	RTC10/16-C	Center Handle	1
4	RTC10/16-HDW	Handle Hardware Kit	1

CALL US FIRST !!

Call us first with questions about operating or maintaining your tool at 1-800-633-1501 between 8:00 a.m. – 5:00 p.m. Eastern Standard Time, or get assistance on www.americanlawnmower.com.

NOTES

OWNER'S MANUAL
11" 10-Amp Corded Electric Tiller / Cultivator

Copyright All Rights Reserved.

Model TC70010-1 | SKU# 270-2453

YARDWORKS WARRANTY POLICY

- **Two (2) year limited warranty** on Yardworks outdoor power equipment.

The Great States Corp. (GSC) warrants to the original owner that this Yardworks product and service part is free from defects in materials and workmanship and agrees to repair or replace any defective product or part for the warranty period as stated above.

- Warranty voided if used for commercial or industrial purposes or any other improper use as determined by GSC.
- Warranty does not include repairs necessary due to operator's abuse or negligence (including overloading the product beyond capacity or immersion in water), or the failure to assemble, operate, maintain or store the product according to the instructions in the owner's manual.
- This warranty does not cover
  - ◊ Wear items, including but not limited to - drive belts & gears, tines, cutting blades, mower blades, saw chains, mulching blades, blower fans, spool covers, trimmer line, blower and vacuum tubes, guide bars, high pressure hoses, wheels, handles, augers, worn bags, power cables, and other items subject to wear over time.
  - ◊ Wear on batteries, including but not limited to – drops, wear and breakage on charger, exposure to extreme temperature swings (hot or cold), battery left on charger too long, battery left uncharged for too long, and misuse or abuse of the battery.
- This warranty does not cover damage caused by cold, heat, rain, excessive humidity or other environmental extremes.
- This warranty does not cover normal deterioration of the exterior finish or normal wear and tear on the products including, but not limited to scratches, cracks, dents, or damage caused by outside chemicals.
- This warranty is not transferable and only applies to new products sold directly from an authorized retailer. This warranty does not apply to any product, new or used, purchased through unauthorized third-party channels. For information on authorized dealers, contact our customer support hotline at 1-800-633-1501 (Mon-Fri 8am-5pm Est)
- Any incidental, indirect or consequential loss, damage, or expense that may result from any defect or malfunction of the products is not covered by the warranty.
- The warranty does not include installation, assembly or normal adjustments explained in the owner's manual. The expense of delivering the product to the vendor and the expense of returning the product or replacement parts to the owner is not covered by the warranty.

Additional Warranty Limitations

Some states do not allow the exclusion or limitation on how long an implied warranty lasts, so the above limitation may not apply to you. Products sold damaged or incomplete, sold —as is, or sold as reconditioned are not covered under the warranty.

Damage or liability caused by shipping, improper handling, improper assembly, incorrect voltage, improper wiring, improper maintenance, improper modification or the use of accessories and/or attachments not specifically recommended is not covered by this warranty.

Proof of purchase, original dated sales receipt, must accompany all warranty claims.

For claims go to americanlawnmower.com or call our customer support hotline from 8am-5pm EST,

Mon-Fri at 1-800-633-1501

American Lawn Mower Company
The Great States Corporation
7444 Shadeland Station Way
Indianapolis, IN 46256
Phone 1-800-633-1501
www.americanlawnmower.com

In a continued commitment to improve quality, the Manufacturer reserves the right to make component changes or design changes when necessary.

Rev. 09/13/2021