PRORUN®

+GAS

OPERATOR'S MANUAL

LAWN TRACTOR

540cc, 42-inch, Hydrostatic Transmission

MODEL: PBLT1942HB

⚠ **IMPORTANT!**
ENGINE OIL REQUIRED BEFORE OPERATION (Sold Separately)



Everything PRORUN

⚠ **IMPORTANT – READ CAREFULLY BEFORE USE.**

⚠ **IMPORTANT SAFETY INSTRUCTIONS – SAVE THESE INSTRUCTIONS**

WARNING: To reduce the risk of injury, the user must read and understand the user manual before using this product. Keep these instructions for future reference.

Please let us know what you think. To leave a comment and see our complete product line, Visit:

PRORUNTOOLS.COM ★★★★★

1-844-905-0882, info@proruntech.com

Version: A – Issue Date: 10/9/2025

10130 Perimeter Pkwy Ste 140, Charlotte, NC 28216

PRORUN

1. PRODUCT SPECIFICATION

SKU	PBLT1942HB
Engine brand	Briggs EPA Cert
Engine HP	19 HP
Engine Displacement	540cc
Engine Model	EX1900
Engine Model #	33S8770039G1
Engine feature	OHV
Cylinders	1/cast-iron sleeve
Starting	Manual/Key
Gas tank size	7.5L/2 gal
Gas type	87 octane
Oil capacity	48 oz (1.5 quarts)
Oil	SAE 30/10W 30
Briggs Oil Filter	492932S / 5049K
Briggs Air Filter	793569 / 5415K
Briggs Fuel Filter	394358S / 5065K
Briggs Spark Plug	84007216 / 5092K
TRANSMISSION	
Type	Hydrostatic
Speed forward	0-9.2 km/h 5.7 mph
Speed reverse	0-6.4 km/h 3.9 mph
CHASSIS	
Frame	Robotically welded
Tires front	15"×6.00-6
Tires rear	18"×8.50-8
Turning radius	45cm 17.7."
MOWER	
Cutting width	108cm (42")
Maximum working area	6000m^2 1.5 acre
Mower deck	Steel
Collector capacity	/
Cutting height	30~90mm 1.2" to 3.5"
Cutting height positions	7
Blades	Twin
FEATURES	
Mulch Kit	
Front bumper/rear hitch	
Adjustable High Back sliding seat	
Ergonomic steering wheel	
Powder-coated cutting deck	
Visible fuel level	
LED Headlights	
Cup holder	
Mow in Reverse Capable	
Warranty	3 Year
Engine Warranty	2 Year
UNIT SPECIFICATIONS	
Weight	170kg
Meas	1770×1380×1110mm
Container Qty	42
Turning radius	45cm 17.7."

2. TABLE OF CONTENTS

1. PRODUCT SPECIFICATIONS 2
2. TABLE OF CONTENTS 3
3. SAFETY 4
4. SYMBOLS 7
5. IDENTIFICATION OF THE MOWER 9
6. UNPACKING & ASSEMBLY 11
7. CONTROLS & INSTRUMENTS 17
8. HOW TO USE MOWER 20
9. MAINTENANCE 29
10. TROUBLESHOOTING 34
11. EXPLODED VIEWS AND PARTS 39

3. SAFETY

INSTRUCTIONS FOR RIDE-ON MOWER AND PEDESTRIANS.

This mower is designed for cutting grass and can cause serious injury. Rotating blades can amputate hands and feet, and the mower may propel objects at high speed.

Failure to read, understand, and follow the safety instructions in this manual may result in serious personal injury or death.

3.1 GENERAL INFORMATION

1. Read, understand, and follow all instructions and safety warnings in this manual and displayed on the mower, engine, and any attachments.
2. Only trained, responsible individuals who are familiar with these instructions and physically capable of operating the mower may use it.
3. Do not carry passengers. Keep all bystanders at a safe distance during the operation.
4. Never operate the mower while under the influence of alcohol, drugs, or any substances that may impair judgment or coordination.
5. Follow the manufacturer's recommendations regarding wheel weights or counterweights to ensure safe and stable operation.

3.2 PREPARATION BEFORE OPERATING

1. Inspect the operating area and remove objects that could be thrown by the mower or interfere with safe operation.
2. Keep all bystanders, especially children, out of the operating area. Stop the mower and any attachments immediately if anyone enters the area.
3. Do not operate the mower unless all safety devices—such as the grass catcher, discharge chute, and guards—are properly installed and functioning. Inspect these components regularly and replace worn or damaged parts.
4. Wear appropriate personal protective equipment (PPE), including safety glasses, hearing protection, and sturdy footwear.

3.3 OPERATING

1. Operate the engine only in well-ventilated areas. Exhaust gases contain carbon monoxide, a deadly poison.
2. Operate the mower only in daylight or adequate artificial light.
3. Avoid holes, ruts, bumps, rocks, or other hidden hazards. Uneven terrain may cause loss of control or mower overturn.
4. Keep hands or feet away from rotating parts and from under the mower. Stay clear of the discharge opening at all times.
5. Do not discharge material toward anyone. Avoid discharging against walls or obstructions, as material may ricochet toward the operator. Stop blades when crossing gravel surfaces.

6. Never leave a running mower unattended. Park on level ground, disengage attachments, set the parking brake, and stop the engine.
7. Do not mow in reverse unless absolutely necessary. Always look down and behind before and while backing up.

3.4 CHILDREN SPECIFIC

1. Serious accidents can occur if the operator is not alert to the presence of children. Children are often attracted to mowers and mowing activities. Never assume that children will remain where you last saw them.
2. Keep children out of the operating area and under the supervision of a responsible adult other than the operator.
3. Never carry children, even with the blades disengaged. Children can fall off, be severely injured, or interfere with safe operation. Children who have previously been given rides may re-enter the mowing area unexpectedly and be run over or backed over.

3.5 SLOPE SPECIFIC

Slopes are a major factor related to accidents and require extra caution.

1. Travel in the manufacturer-recommended direction when operating on slopes. Use extreme caution near drop-offs.
2. Avoid mowing wet grass. Poor footing may cause slips or falls.
3. Do not operate the mower if traction, steering, or stability is uncertain. Tires may lose traction even if the wheels stop.
4. Keep the mower in gear when traveling downhill. Do not coast.
5. Avoid starting and stopping on slopes. Make turns slowly and avoid sudden speed or direction changes.
6. Use extra care when operating with a grass catcher or other attachments, as they may affect mower stability.

3.6 FIRE AND FUEL SPECIFIC

1. Extinguish all cigarettes, cigars, pipes, and other ignition sources.
2. Use only an approved fuel container.
3. Do not remove the fuel cap or add fuel while the engine is running or hot.
4. Do not refuel indoors or in enclosed spaces.
5. Do not store fuel, refuel, or park the mower near open flame, sparks, or pilot lights.
6. If fuel is spilled, do not start the engine. Avoid any ignition sources until vapors have dissipated.
7. To prevent fires, keep the mower free of grass, leaves, and debris; clean up oil or fuel spills; and allow the mower to cool before storage.
8. Handle gasoline and other fuels with care. They are highly flammable, and vapors are explosive.

3.7 HAULING

1. Use full-width ramps for loading or unloading the mower for transport.

3.8 TOWING

1. Follow the manufacturer's recommendations for towed equipment weight limits and towing on slopes.

3.5 ROPS (ROLL-OVER PROTECTION SYSTEM)

1. The ROPS is a critical safety device. Do not remove, modify, or alter it.
2. Keep a folding ROPS in the raised and locked position and wear the seat belt during operation.
3. Lower a folding ROPS only when absolutely necessary. Do not wear the seat belt when the ROPS is lowered. There is no rollover protection in the lowered position.
4. Replace damaged ROPS components immediately. Do not repair or alter them.

3.9 SERVICE

1. Keep the mower in safe working condition. Replace worn, damaged, or missing parts promptly.
2. Use caution when servicing blades. Wrap the blades or wear protective gloves. Replace damaged blades-Do not repair or modify them.
3. **WARNING!** Mowers equipped with hydraulic or diesel injection systems contain fluid under high pressure that can penetrate skin and cause serious injury. If fluid is injected into the skin, seek immediate medical attention. Keep hands and body away from high-pressure leaks. Have leaks serviced immediately by a qualified technician.
4. Before performing service or repairs, disconnect spark plug wire(s) and the negative battery cable, if equipped.

4. SYMBOLS

This mower must be operated with care. Safety labels with illustrations are affixed to the mower to remind operators of important safety precautions to follow during use.

These labels are an integral part of the mower and must remain in place and legible at all times. If any label becomes damaged, detached, or illegible, contact your authorized dealer for a replacement.

The meaning of each safety label is explained below.

	**IMPORTANT!** Follow all safety instructions to reduce the risk of personal injury.
	**WARNING!** Read and understand all instructions before operating this mower.
	**WARNING!** Before performing any repair or maintenance, remove the ignition key and carefully read all instructions.
	**WARNING!** Do not step on the mower deck or discharge guard.
	**DANGER - EJECTED OBJECT:** Do not operate the mower unless the discharge guard or grass catcher is properly installed and in place.
	**WARNING!** Keep all bystanders at a safe distance from the mower during operation.
	**WARNING!** Never use a high-pressure washer to clean the transmission system.
	**DANGER! RISK OF BURNS:** Allow the engine to cool completely before performing adjustments or service.
	**DANGER!** Risk of rollover when operating on steep slopes.
	**WARNING!** Never carry children

	**WARNING!** Use extreme caution when operating in reverse. Look down and behind for children, animals, or obstacles that could cause loss of control or balance.
	**WARNING!** Keep hands and feet away from rotating parts.
	**WARNING!** Beware of thrown objects.
	**WARNING!** Wear approved hearing protection during operation.
	**DANGER!** Sulfuric acid is toxic and corrosive. Contact or exposure can cause serious injury or death.

5. IDENTIFICATION OF THE MOWER

Each machine is equipped with an identification label located on the seat bracket. This label contains important information specific to the mower and must be kept clean and legible at all times.

The identification label includes the following information:

1. Name and address of the manufacturer
2. Mower designation (model)
3. Mower type
4. Cutting width
5. Mower mass (weight)
6. Engine nominal power
7. Serial number
8. Year of manufacture
9. Guaranteed sound power level in accordance with Directive 2000/14/EC

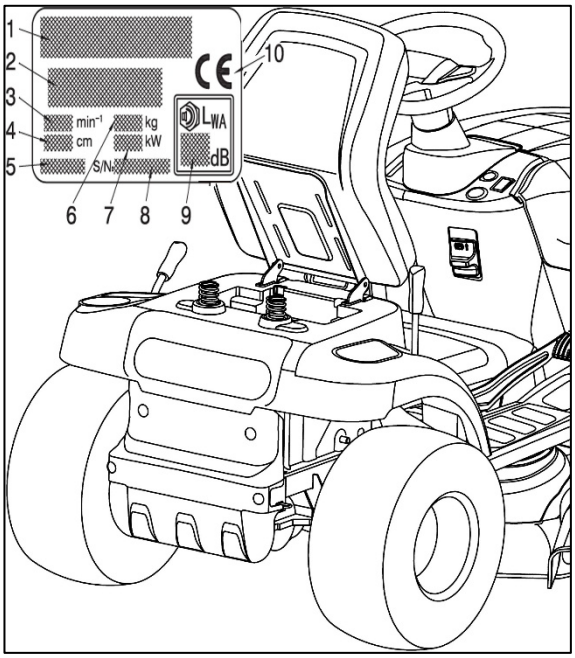

Any damaged, missing, or illegible decals must be replaced. Replacement decals can be ordered from a PRORUN-authorized service center.

For future reference, record the mower identification information on the back cover of this operator's manual.

5.1 IDENTIFICATION OF MAIN COMPONENTS

The main components of the mower are identified below:

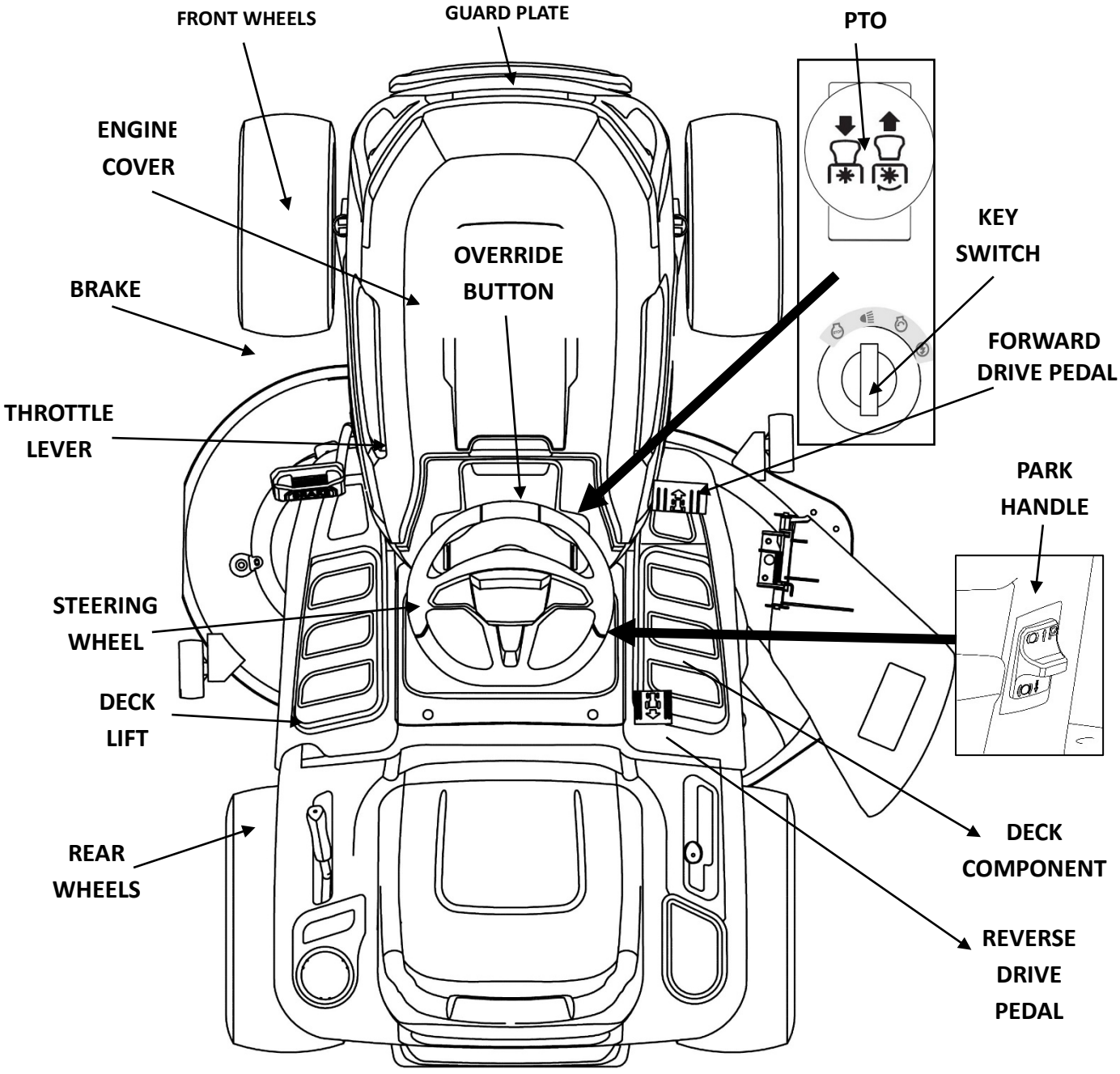

6. UNPACKING AND ASSEMBLY

For storage and transportation, certain mower components are not installed at the factory and must be assembled after unpacking. Carefully follow the instructions below to ensure correct and safe assembly.

⚠ **IMPORTANT!**

This mower is shipped without engine oil.
Before starting the mower for the first time, add **SAE 30 or 10W-30 engine oil**.
DO NOT OVERFILL.

6.1 UNPACKING

When unpacking the mower, carefully remove and collect all individual parts and fasteners. Use caution to avoid damaging the cutting deck when removing the mower from the pallet.
The package contains the following components:

1. Mower body
2. Steering connecting shaft and splined hub
3. Towing kit
4. Front Bumper
5. Left Bumper bracket
6. Right Bumper bracket
7. Steering wheel cover
8. Steering wheel
9. Steering shaft cover
10. Operator's manual
11. Nuts, bolts, washers, bushings (11a Optional)
12. Seat
13. Tools and starter key
14. Side deflector (LT86SH models only)
15. Reinforcement plate, washers, bolts, and nuts (LT108SH models only)
16. Mulching kit (if applicable)

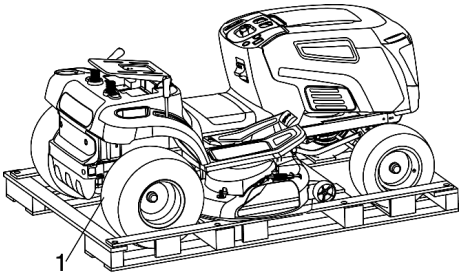

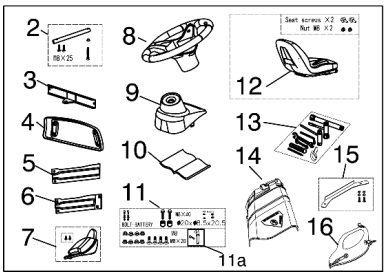

⚠ **NOTE**

To prevent damage to the cutting deck, raise the deck to its maximum height and use extreme care when removing the mower from the pallet.

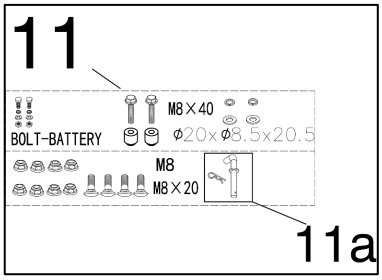

6.2 FITTING THE STEERING WHEEL

Place the mower on a level surface and ensure the front wheels are aligned straight ahead.

Proceed as follows:

a. Install the steering shaft (1) onto the couplings and secure it with the M8 × 25 screw (2).
- Use the supplied 5 mm hex wrench

b. Install the steering shaft cover (3).

c. Insert the splined hub (4) into the steering shaft (1). Install the steering wheel (5) and spacer (6), then secure with the M8 nut (7).
- Use the supplied 13–15 mm open-end wrench

d. Install the steering wheel cover (8) and secure it with two ST4.8 × 16 screws (9).
- Use the Phillips (cross-head) screwdriver supplied in the accessory tools.

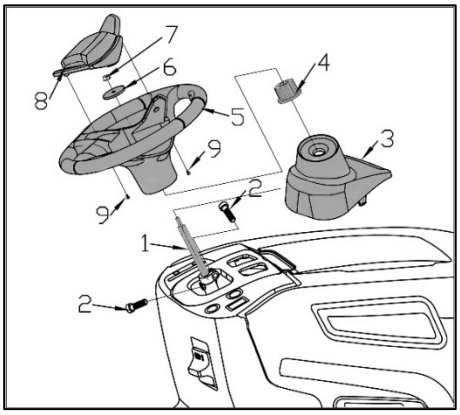

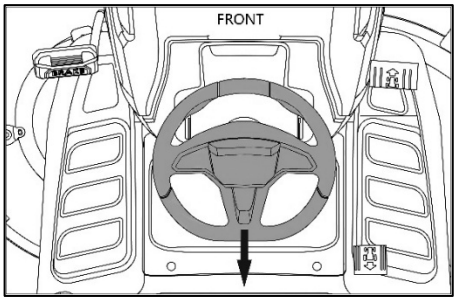

⚠ **NOTE:**

Ensure the steering wheel is installed in the correct orientation before fully tightening the fasteners.

6.3 FITTING THE SEAT

Proceed as follows:

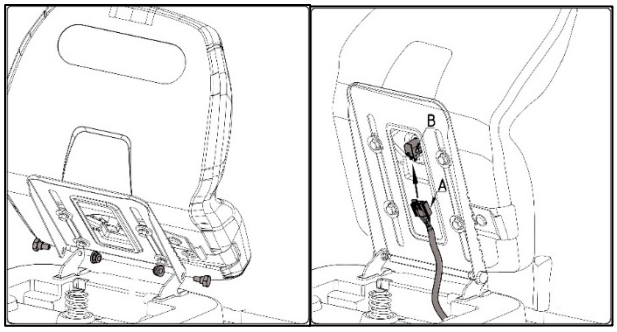

1. Remove the fasteners from the seat bracket on the mower by loosening and removing the two M8 nuts and two screws.
   - Use the 13–15 mm open-end wrench supplied in the accessory tools.
2. Position the seat onto the seat bracket and secure it using the previously removed two M8 nuts and two screws. Tighten all fasteners securely.
3. Connect the wiring harness (A) to the seat safety switch (B) located beneath the seat.

For Luxury seat only (if applicable):

Proceed as follows:

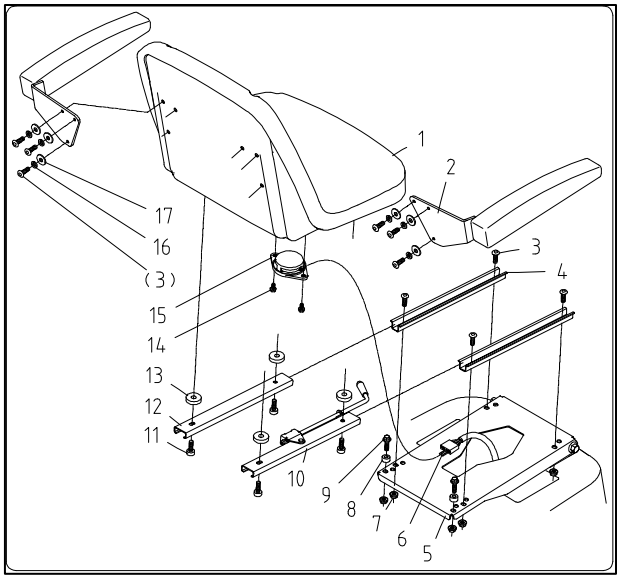

1. Remove the slide rail components (No. 4, No. 10, No. 11) from the packaging. Assemble the slide rails to the seat (No. 1) using the seat washers Ø32 × Ø10.5 × 8 (No. 13) and M8 × 20 screws (No. 11).
2. Install the seat safety switch components (No. 15) using the M6 × 16 screws (No. 14).
3. Remove the pre-installed limit bolts (No. 9) and spacer (No. 8) from the slide rail base plate (No. 5). Slide the rail assembly fully rearward, then secure the front portion of the seat slide rail assembly (assembled in Step 1) to the slide rail base plate using M8 × 16 screws (No. 3) and M8 nuts (No. 7).
4. Slide the rail assembly forward and secure the rear portion of the seat slide rail assembly to the slide rail base plate using the remaining M8 × 16 screws (No. 3) and M8 nuts (No. 7).
5. Reinstall the limit bolts (No. 9) that were removed in Step 3.
6. Install the armrests (No. 2) onto the back of the seat using the provided screws, spring washers, and flat washers (No. 3, No. 16, No. 17).
7. Connect the wiring harness (A) to the seat safety switch (B) located beneath the seat.

6.4 CONNECTING THE BATTERY

The battery contains electrolyte (sulfuric acid), which is hazardous if mishandled. Observe all safety instructions below.

	⚠ **DANGER!** Sulphonic acid is toxic
	⚠ **DANGER!** Sulfuric acid is highly corrosive. Contact may cause severe burns or blindness.
	⚠ **DANGER!** Keep the battery and electrolyte out of reach of children.

Battery Installation:

1. Install the battery into the battery compartment.

⚠ **IMPORTANT!**

Ensure the battery is positioned correctly with the positive (+) and negative (–) terminals aligned to the corresponding mower leads.

2. Connect the battery cables to the battery terminals and securely tighten the two terminal screws.
   - Install the protective caps over both battery terminals after tightening.
   - Use an 8–10 mm open-end wrench and a Phillips (cross-head) screwdriver.
3. Secure the battery using the provided rubber retaining strap.

⚠ **NOTE**

- Battery specification: 12 V, 18 Ah
- The battery is fully charged at the factory.
- If the battery charge is insufficient, recharge using a 12 V / 1 A battery charger only.

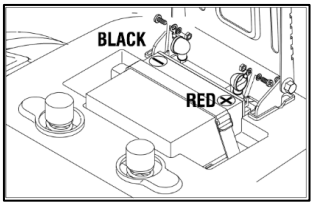

Environmental Protection (EU Countries Only)



- Do not dispose of electrical equipment with household waste.
- In accordance with European Directive 2012/19/EU (WEEE) on waste electrical and electronic equipment, used electrical products must be collected separately and disposed of in an environmentally responsible manner.
- When the equipment is no longer required, it must be taken to an authorized collection or recycling facility in accordance with national waste-disposal regulations. This requirement does not apply to accessories or components without electrical parts supplied with the equipment.

Legal Notice
Reproduction or reprinting of this documentation, in whole or in part, by any means, is permitted only with the express written consent of
ZHEJIANG ZHONGJIAN TECHNOLOGY CO., LTD.
Specifications and technical details are subject to change without notice.

6.5 MOUNTING THE FRONT BUMPER

Proceed as follows:

a. Attach the bumper brackets

Mount the left (L) and right (R) bumper brackets to the bumper using four M8 × 20 screws and four M8 nuts.

- Use the 13–15 mm open-end wrench supplied in the accessory tools.

b. Install the front bumper assembly

Position the assembled front bumper onto the bottom of the frame and secure it using the four M8 nuts.

- Use the 13–15 mm open-end wrench supplied in the accessory tools.

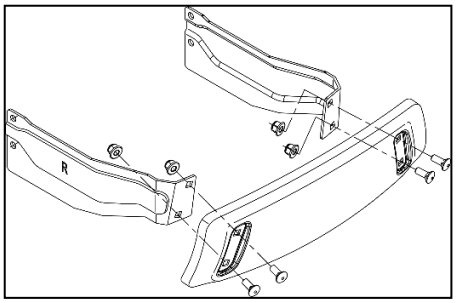

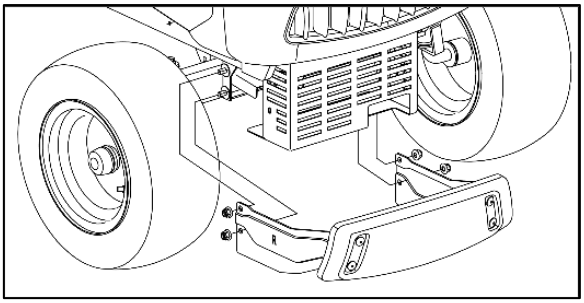

6.6 MOUNTING THE SIDE DEFLECTOR

Proceed as follows:

a. Insert the cotter pin (1) and washer (2) into one end of the pin shaft (3).

b. Insert the pin shaft (3) through the side deflector (4), torsion spring (5), and mounting bracket (6) in sequence. Install the washer (2) and cotter pin (1) on the opposite end.

c. Bend the ends of both cotter pins to secure the assembly.

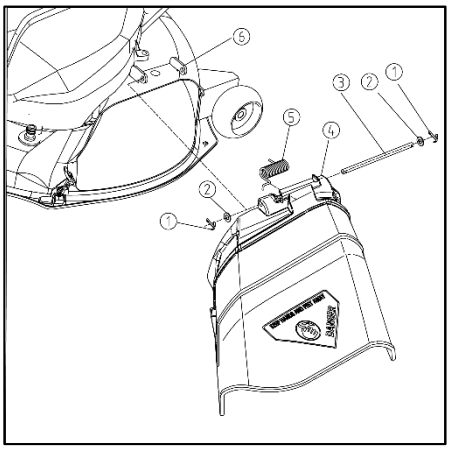

⚠ **Note**

To open the side deflector, press the self-locking button first. Do not force the deflector open, as this may cause damage.

6.7 MOUNTING THE MULCHING KIT (IF APPLICABLE)

To convert the cutting deck to mulch mode, a mulching kit must be purchased separately.

Proceed as follows:

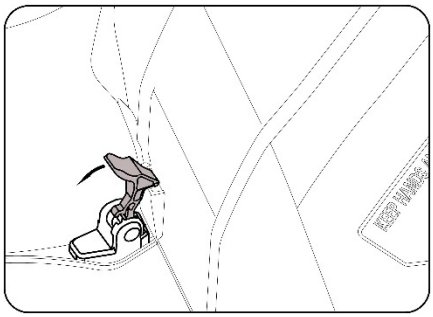

a. Open the side deflector by pressing the self-locking button.

b. Insert the lug boss (M) of the mulching kit upward through the lower pin (N). Position the lower left corner of the mulching kit beneath the self-locking base (see Figure B), then insert the right dowel pin into the corresponding hole in the cutting deck (see Figure C).

c. Engage the hooks by inserting the left hook into the groove of the self-locking base (see Figure A) and the right hook into the hole in the cutting deck (see Figure D).

- Ensure the mulching kit is securely installed before operating the mower.

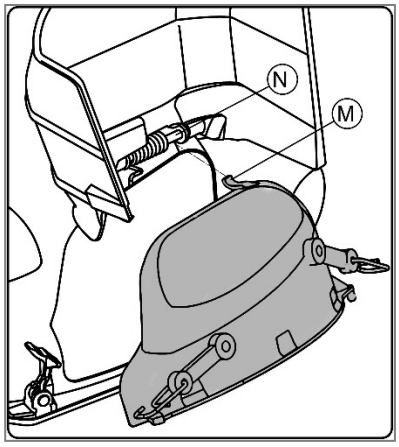

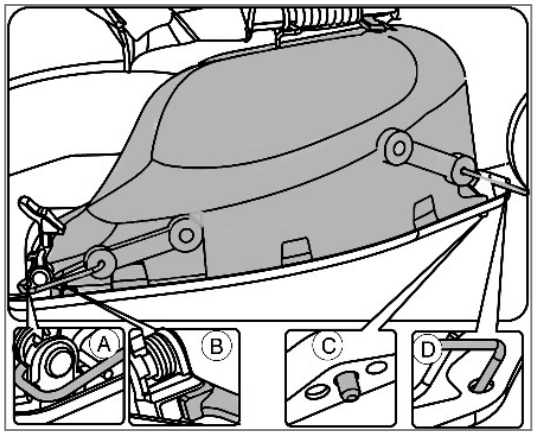

6.8 MOUNTING THE TOWING KIT

Proceed as follows:

a. Remove the existing fasteners

Remove the tension arm bushing (1) and the M8 × 20 hex flange bolts (2) that secure the gearbox cover (3).

b. Install the towing kit components

Insert the cushion sleeve (1) into the bolt hole from which the bolt was removed. Align the traction plate (5) with the mounting holes, then secure it using an M8 × 40 hex flange bolt (4) together with a Ø8 spring washer (3) and flat washer (4). Tighten all fasteners securely before operating the mower.

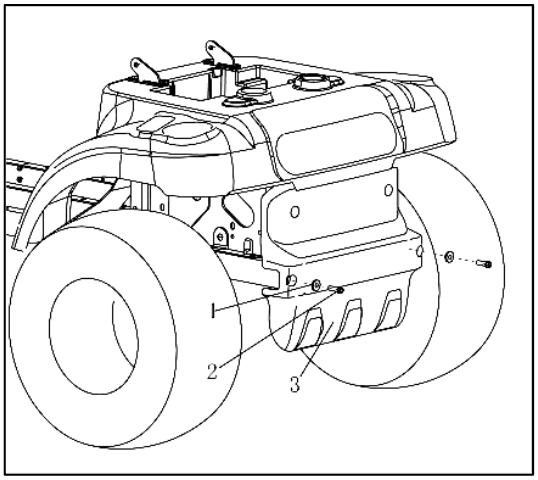
1
2
3

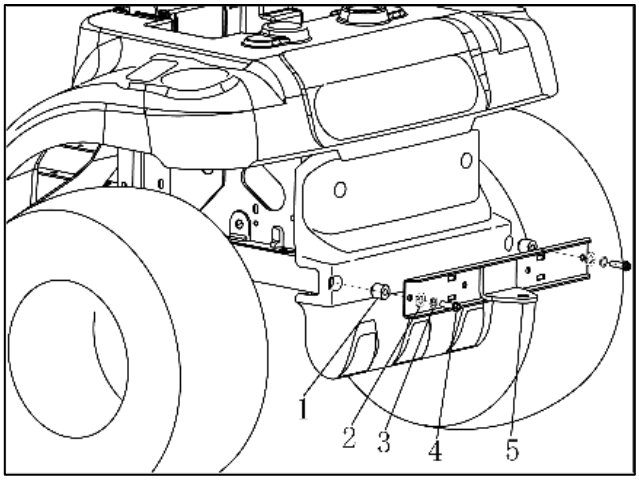
1
2
3
4
5

7. CONTROLS AND INSTRUMENTS

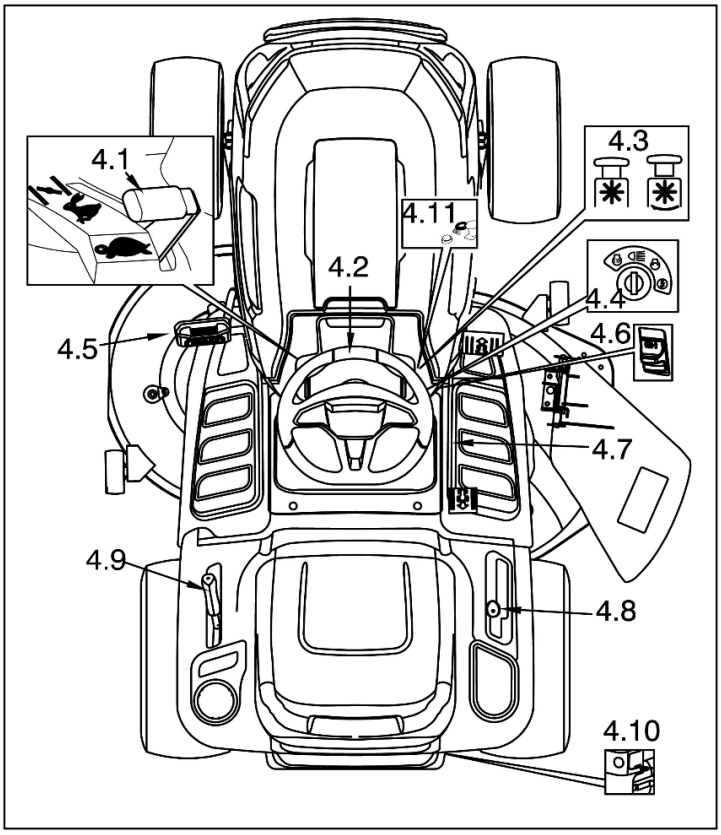

7.1 THROTTLE LEVER

The throttle lever controls the engine speed. The lever positions are identified by symbols on the control label, as described below:

	CHOKE - For cold engine starting
	SLOW - For minimum engine speed (idle)
	FAST - For maximum engine speed

Operating guidelines:

- Use the CHOKE position only when starting a cold engine. Once the engine starts, move the lever out of the choke position as soon as possible.
- When traveling from one work area to another, place the throttle lever in a position between SLOW and FAST.
- During mowing or cutting operations, always set the throttle lever to FAST for proper performance.

7.2 STEERING WHEEL

The steering wheel is used to turn the front wheels and control the direction of travel.

7.3 BLADE START/STOP KNOB

The blade start/stop knob is located on the right-hand (RH) console, in front of the ignition key switch.

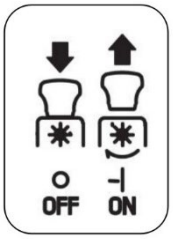

This knob controls the electric blade clutch:

- Pull the knob upward to engage the cutting blades.
- Push the knob downward to disengage the cutting blades.

7.4 KEY IGNITION SWITCH

The ignition switch is key-operated and has the following positions:

	**OFF** - All electrical systems are switched off.
	**ON** - Activates the electrical system and allows normal operation.
	**START** - Engages the starter motor. When released, the key automatically returns to the ON position.

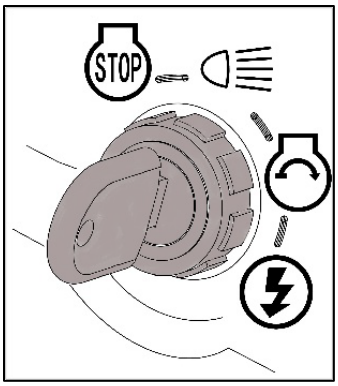

When the switch is in the ON position, electrical power is supplied to components such as the headlights (if equipped).

7.5 BRAKE PEDAL

The brake pedal is located on the left front side of the footboard.

The brake pedal is used for:

- Slowing or stopping the mower
- Engaging the parking brake

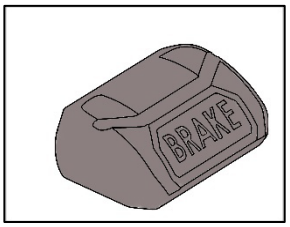

⚠ **NOTE**

When the mower is moving, do not rest your foot on the brake pedal, as this may cause premature brake wear.

7.6 PARKING BRAKE LEVER

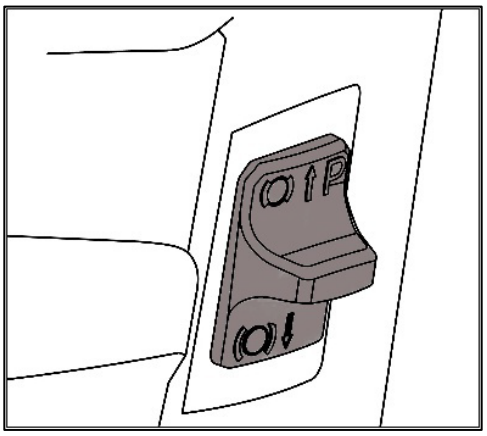

To engage the parking brake (mower stopped):

1. Press and hold the brake pedal.
2. Lift and hold the parking brake lever.
3. Release the brake pedal.



The rear wheels will remain braked.

To release the parking brake:

- Fully press the brake pedal.
  The parking brake lever will automatically release and return to the lowered position.

Engine start conditions

The engine will start only if:

- The operator is seated in the operator position; and
- The parking brake is engaged (mechanical models only)
- The traction drive and cutting blades are disengaged.

7.7 DRIVE ENGAGEMENT

(Hydrostatic Transmission Models Only)

This pedal controls wheel drive and allows smooth adjustment of forward and reverse speed.

- Forward travel: Press the pedal forward toward “F” with the toe. Speed increases as pedal pressure increases.
- Reverse travel: Press the pedal rearward toward “R” with the heel.
- Neutral: The pedal automatically returns to “N” when released.

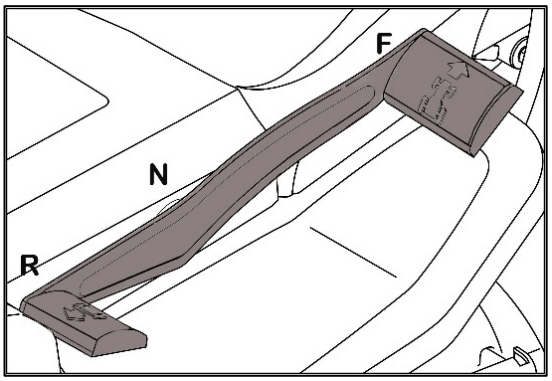

⚠ **WARNING!**

Reverse travel must only be engaged when the mower is stopped.

⚠ **NOTE**

Ensure the parking brake is fully released before driving the mower.

7.9 CUTTING HEIGHT ADJUSTMENT LEVER



The cutting height adjustment lever raises or lowers the cutting deck to set the desired grass height.

- The lever has seven positions, marked “1” to “7” on the label.
- These positions correspond to cutting heights ranging from approximately 30 mm to 90 mm.

7.10 REVERSE MODE OPERATION BUTTON

The Reverse Mode Operation (RMO) button is located on the RH console, to the left of the blade start/stop knob.

By default, the blades automatically stop when reverse travel is selected.
To continue blade operation while reversing, press the RMO button.

⚠ **NOTE**

Mowing in reverse is not recommended and should be performed only when absolutely necessary.

8. HOW TO USE THE MOWER

8.1 SAFETY RECOMMENDATIONS

⚠ **DANGER!**

This mower must be used only for its intended purpose.

- Do not tamper with, disable, or remove any safety devices installed on the mower.
- The operator is solely responsible for any damage or injury to people or property resulting from improper use.

Before operating the mower:

- Read and understand all safety instructions, with particular attention to driving and mowing on slopes.
- Carefully read these operating instructions. Become familiar with all controls and know how to stop the engine and blades quickly.
- Keep hands and feet away from rotating parts at all times, and stay clear of the discharge chute.
- Do not operate the mower if you are tired, unwell, or under the influence of alcohol, medication, or substances that may impair judgment, reflexes, or concentration.
- Assess the work area for potential hazards and take all necessary precautions to protect yourself and others.
- Use extreme caution on slopes and on rough, slippery, or uneven ground.
- Do not leave the mower running in tall grass, as this may create a fire hazard.
- Never operate the mower without the side deflector properly installed.

⚠ **WARNING!**

Do not operate the mower on slopes steeper than **15° (27%)**, or on side slopes greater than **10° (18%)**.
If the mower is used frequently on sloping terrain, install approved front counterweights to improve stability and reduce the risk of tipping.

⚠ **IMPORTANT!**

All control locations and functions are described in **Section 7**.

8.2 SAFETY DEVICES

The mower is equipped with safety devices that prevent engine startup unless all required conditions are met.

a. To start the engine, it is necessary that:
   - The blades are not engaged.
   - The parking brake is engaged.
   - The operator is seated in the operator's seat.

b. The engine stops when:

- The operator leaves his seat while moving or driving.

8.3 PREPARATIONS BEFORE STARTING WORK

Before moving the mower, perform the following checks to ensure safe and efficient operation.

8.3.1 SEAT ADJUSTMENT

While seated, lift the seat adjustment lever and slide the seat forward or backward to a comfortable position. Release the lever and ensure the seat locks securely before operating the mower.

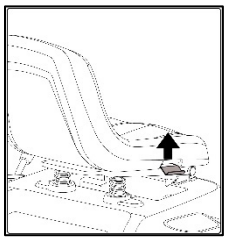

Luxury seat models (if equipped):
Pull up and hold the adjustment lever, slide the seat to the desired position, then release the lever. Confirm the seat is locked before operation.

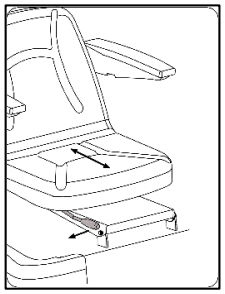

8.3.2 TIRE PRESSURE

Correct tire pressure is essential for proper deck leveling and even cutting.

1. Remove the valve caps
2. Use a tire pressure gauge to check pressure.
3. Inflate tires as needed to the following specifications:
   - **Front tires**: 1.2 bar (15 x 6.0-6)
   - **Rear tires**: 1.0 bar (18 x 8.5-8)

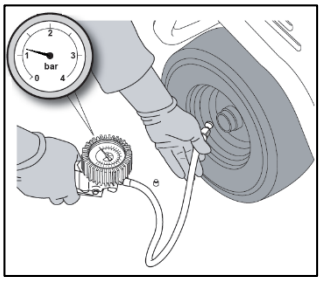

8.3.3 CHECKING THE FUEL AND OIL.

⚠ **IMPORTANT!**

The unit is shipped without oil. **Add SAE 30 or 10W-30 engine oil before starting for the first time**. DO NOT OVERFILL.

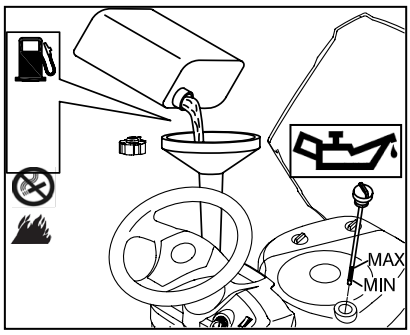

With the engine off, check the oil level. This must be between the **MIN** and **MAX** marks on the dipstick.

Refuel with **87 octane** or better using a funnel, but do not overfill the tank. The gas tank is **7.5 liters/2 gals**.

⚠ **DANGER!**

Refueling should be carried out in an open or well-ventilated area with the engine off. Always remember that gas fumes are flammable.
Do not use a naked flame to look inside the tank, and do not smoke when refueling.

⚠ **IMPORTANT!**
Do not drip gas onto the plastic parts to avoid damaging them. In the event of accidental spills or leaks, rinse immediately with water. The warranty does not cover damage to the plastic parts of the bodywork or the engine caused by gas.

8.3.4 CHECKING MOWER SAFETY AND PERFORMANCE

Before mowing:

1. Ensure all safety devices are functioning correctly.
2. Verify the brake operates properly.
3. Do not mow if blades vibrate excessively or appear dull.

Remember:

- Dull blades tear grass and cause yellowing.
- Loose Blades can cause Dangerous vibration.

⚠ **WARNING!**
Do not operate the mower if you suspect unsafe or inefficient operation. Contact an authorized dealer for inspection and repair.

8.3.5 HYDROSTATIC TRANSMISSION DISENGAGEMENT LEVER

The transmission disengagement lever has two positions (see label on rear bumper):

Position "A" Transmission Engaged:

- Normal operating position

Position "B" Transmission Disengaged:

- Allows the mower to be pushed manually for transport or storage.

FOR T2 transmission

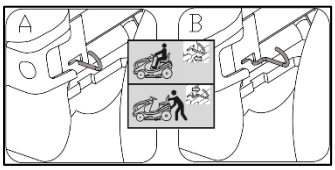

8.4 OPERATING THE MOWER
8.4.1 STARTING THE ENGINE

⚠ **DANGER!**
Start the engine only in open or well-ventilated areas. Exhaust fumes are toxic.
To start the engine:

1. Open the fuel shutoff valve (position "I").
2. Close the engine cover.
3. Raise the cutting deck to its highest position.
4. Disengage the blades.
5. Place the transmission in neutral or release the drive pedal.
6. Engage the parking brake.
7. For cold starts, move the throttle to CHOKE.
8. For warm starts, position the throttle between SLOW and FAST.

9. Insert the key, turn to ON, then to START.
10. Release the key once the engine starts.

After starting, return the throttle to SLOW and disengage the choke as soon as the engine runs smoothly.

⚠ **IMPORTANT!**

Using the choke on a warm engine may foul the spark plugs.

⚠ **NOTE**

If the engine does not start, turn the key to OFF, wait a few seconds, and try again. Repeated attempts may drain the battery.

8.4.2 STARTING AND MOVING WITHOUT MOWING.

⚠ **WARNING!**

This mower is not approved for use on public roads.

- When transporting the mower, the blades must be disengaged and the cutting deck raised as high as possible (position 7).

Hydrostatic transmission models:

- Position the throttle between **SLOW** and **FAST**.
- Disengage the parking brake and release the brake pedal.
- Press the driver's pedal **FORWARD (F)** in order to reach your desired speed.

⚠ **WARNING!**

The brake pedal must be released gradually, as a sudden engagement may cause the vehicle to tip over and the driver to lose control.

Gradually reach the desired speed using the throttle and gear lever.
To change gears, the clutch must always be used by pushing the brake pedal.

8.4.3 BRAKING

Reduce engine speed, then press the brake pedal fully until the mower stops.

8.4.4 REVERSE

⚠ **IMPORTANT!**

THE REVERSE MUST BE ENGAGED ONLY WHEN THE MOWER HAS STOPPED COMPLETELY.

Hydro Transmission Model:

Press the brake pedal until the mower stops. Then, press the reverse pedal with your heel to drive in **REVERSE (R)** position.

8.4.5 GRASS CUTTING

To begin cutting:

- Adjust the cutting deck to your desired cutting height.
- Engage the cutting blades.
- Gradually move forward onto the grass, proceeding cautiously.
- Regulate both the cutting height and travel speed according to lawn conditions, including grass height, density, and moisture.

⚠ **WARNING!**

When mowing on sloping ground, reduce travel speed to maintain safe operating conditions. Regardless of conditions, always reduce speed if a decrease in engine speed is observed.

- Excessive mowing speed may result in poor cut quality.
- When maneuvering around obstacles, disengage the blades and raise the cutting deck to the highest possible.

⚠ **IMPORTANT!**

This mower is not approved for cutting while traveling in reverse. The blades will automatically disengage when reverse travel is selected by pressing the drive pedal toward REVERSE (R). The override button, located to the right of the steering wheel, allows the blades to remain engaged while mowing in reverse. Use this feature with extreme caution.

8.4.6 END OF MOWING

When mowing is complete:

- Disengage the cutting blades.
- Reduce engine speed.
- Raise the cutting deck to its highest position.

8.4.7 STORAGE

When shutting off the mower:

- Move the throttle to the SLOW position.
- Turn the ignition key to OFF to stop the engine.
- After the engine has completely stopped, close the fuel shut-off valve.

⚠ **IMPORTANT!**

To prevent engine backfire, keep the throttle in the SLOW position for at least 20 seconds before shutting off the engine.

⚠ **IMPORTANT!**

To maintain proper battery charge, never leave the ignition key in the ON position when the engine is not running.

⚠ **WARNING!**

Always remove the ignition key before leaving the mower unattended!

8.4.8 CLEANING THE MOWER

Clean the mower after each use. Regular cleaning helps prevent grass buildup, rust, and early wear. Grass and debris left on the mower may reduce performance and shorten component life.

TOOLS AND MATERIALS

Before cleaning, prepare the following items:

- Deck wash connector adapter (if equipped)
- Garden Hose with standard water pressure
- Bucket
- Mild Soap or approved mower-cleaning solution
- Damp sponge or soft cleaning cloth
- Work gloves
- Safety glasses

NOTE:

Do not use high-pressure washers or aggressive cleaning chemicals

EXTERIOR CLEANING

After mowing, remove grass and debris from the outside of the mower.

- Empty the discharge chute
- Shake the chute to remove grass and debris

Clean plastic body parts with a damp sponge and mild soap.

⚠ **CAUTION!**

Do not allow water to contact the engine, electrical parts, connectors, or electronic control units under the dashboard.

⚠ **WARNING!**

Do not use high-pressure washers, spray nozzles, or harsh soaps on the engine or body panels. High water pressure can damage seals, bearings, and electrical components.

CLEANING THE CUTTING DECK

Deck Wash Procedure

The mower's deck is equipped with a washout port to facilitate routine cleaning.

⚠ **WARNING!**

A missing or damaged washout port creates an opening in the mower deck that can allow debris to be thrown by the cutting blade, resulting in serious injury or death. Do not operate the mower until all washout ports are properly installed and intact. Immediately replace missing or damaged ports and securely plug any deck openings using bolts and locknuts.

1. Position your mower on a level area of the lawn, free of debris, and within reach of a garden hose connected to a water spigot.

   ⚠ **IMPORTANT!**

   Ensure the deck discharge chute is directed away from your buildings, vehicles, and paved surfaces. Remove the bagger chute or mulching cover if installed. Grass clippings may stain concrete or asphalt.

2. Place the blade engagement switch in the “DISENGAGED” position, set the parking brake, and shut off the engine.
3. Attach the nozzle adapter to the end of the garden hose.
4. Pull back the adapter lock collar, connect the nozzle adapter to the deck washout port, then release the collar to secure it.

   ⚠ **IMPORTANT!**

   Gently pull on the hose to confirm the connection is secure.

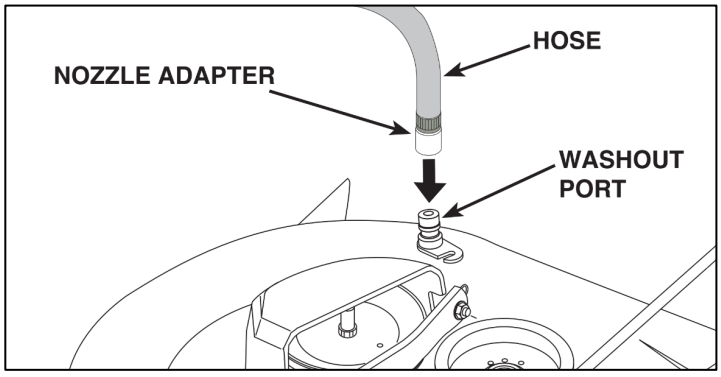

5. Turn on the water supply.
6. While seated in the operator’s seat on the mower, restart the engine, and move the throttle to the “FAST” position.

   ⚠ **IMPORTANT!**

   Verify the area is clear of debris and bystanders, especially children, before proceeding.

7. Engage the PTO/blade engagement switch and remain seated while the deck is being cleaned.

8. When cleaning is complete, disengage the PTO/blades, turn the ignition key to STOP, and then dismount to shut off the water.
9. Disconnect the hose by pulling back the lock collar and removing the adapter from the washout port.
10. Move the mower to a dry area, preferably a paved surface. Briefly engage the PTO to remove excess moisture and help dry the underside of the deck before storage.

8.4.9 STORAGE AND INACTIVITY FOR LONG PERIODS

If the mower will not be used for more than one month, prepare it for storage as follows:

- Disconnect the battery cables according to the engine instruction manual.
- Drain the fuel tank by disconnecting the hose at the fuel inlet, following the procedures in the engine manual.

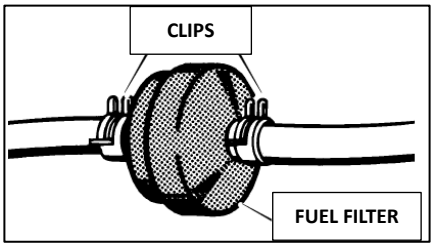

⚠ **WARNING!**

Remove all dry grass clippings or debris from the engine or muffler. Accumulated debris can create a fire hazard when the mower is returned to operation. Store the mower in a dry, covered location. If possible, use a breathable cover to protect it against dust and moisture.

⚠ **IMPORTANT!**

Store the battery in a cool, dry location. Before the storage period exceeds one month, fully charge the battery. Recharge the battery before returning the mower to service. Prior to operation after storage, inspect the mower and ensure there are no fuel leaks from hoses, the fuel shutoff valve, or the carburetor.

8.4.10 SUMMARY OF MAIN STEPS TO FOLLOW WHEN USING THE MOWER.

To…	You must…
Start the engine	Open the fuel shut-off valve, verify all starting conditions are met, and turn the ignition key.
Move forward	Fully depress the forward drive pedal, engage the drive, then gradually release the pedal to move.
Brake or stop	Reduce engine speed and press the brake pedal until the mower slows or stops.
Reverse	Bring the mower to a complete stop, shift to neutral, fully depress the brake pedal, engage reverse, then slowly release the brake pedal.
Cut the grass	Ensure the discharge chute is installed, set the throttle to operating speed, engage the blades, adjust cutting height as required, then slowly move forward.
Finish mowing	Disengage the blades and reduce engine speed.
Stop the engine	Reduce engine speed, wait several seconds, turn the ignition key to OFF, and close the fuel shut-off valve.
Store the mower	Engage the parking brake, remove the ignition key, and clean the mower and cutting deck if required.

8.5 USING ON SLOPING GROUND

Operate the mower only on slopes within the maximum gradient specified in this manual.

When mowing on slopes, always mow up and down, never across the slope. Use extreme caution when changing direction. Ensure the uphill wheels do not strike obstacles such as stones, branches, roots, or similar objects. Contact with obstacles can cause the mower to slide sideways, tip over, or result in loss of control.

⚠ **DANGER!**

Reduce speed before changing direction on slopes. Always engage the parking brake before leaving the mower stopped and unattended.

⚠ **WARNING!**

When starting on sloping ground, move forward slowly and carefully to reduce the risk of tipping over. Reduce forward speed before entering a slope, particularly when traveling downhill.

⚠ **DANGER!**

Never use reverse to reduce speed while traveling downhill. This may cause loss of control, especially on wet or slippery surfaces.

⚠ **DANGER!**

Never operate the mower on slopes with the transmission in neutral or with the drive disengaged. Always engage a low gear before stopping and before leaving the mower unattended.

⚠ **WARNING!**

Slopes are a major factor in tip-over accidents and can result in serious injury or death. Do not operate the mower on slopes exceeding 15° (27%). Operation on slopes within this limit requires increased caution.

SLOPE GAUGE

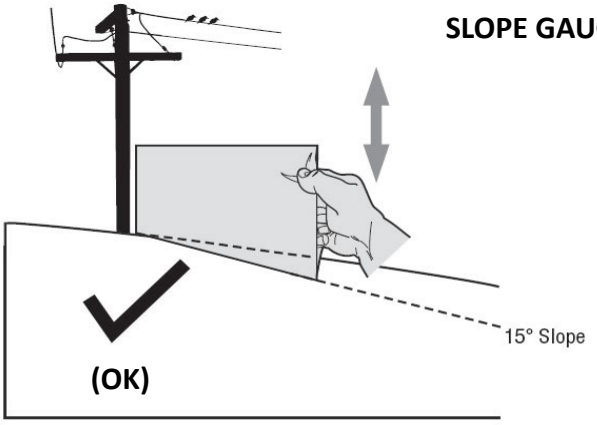

FIGURE 1

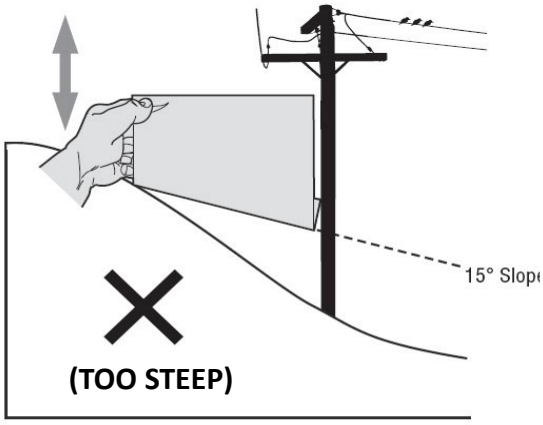

FIGURE 2

15° dashed line

USE THIS SLOPE GAUGE TO DETERMINE IF A SLOPE IS SAFE FOR OPERATION!

To check the slope angle, proceed as follows:

1. Remove this page from the manual and fold it along the dashed line.
2. Locate a vertical reference object on or behind the slope, such as a pole, fence, building, or tree.
3. Hold the slope gauge upright and align one edge of the gauge with the vertical reference object (see Figures 1 and 2).
4. Slowly tilt the gauge forward or backward until the lower corner of the gauge touches the ground surface of the slope (see Figures 1 and 2).

If there is a gap between the slope gauge and the ground, the slope exceeds the safe operating limit. Do not operate the mower on this slope.

8.6 TRANSPORTING

⚠ **WARNING!**

When transporting the mower on a truck or trailer, use lifting equipment and personnel suitable for the mower's weight and the lifting method used. Never lift the mower using ropes, slings, or tackle.

During transport:

- Close the fuel shut-off valve.
- Lower the cutting deck to its lowest position.
- Engage the parking brake.
- Secure the mower firmly to the transport vehicle using straps, ropes, or chains rated for the load.

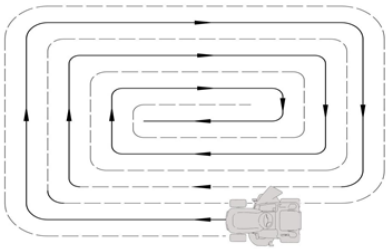

8.7 LAWN MAINTENANCE

1. To maintain a healthy, attractive lawn, mow regularly without overstressing the grass. Frequent mowing promotes dense growth and strong root development. Infrequent mowing allows excessive grass height and weed growth.
2. For best results, mow only when the grass is dry.
3. Keep cutting blades in good condition and properly sharpened. Sharp blades ensure a clean cut and prevent grass tips from browning.
4. Operate the engine at full throttle during mowing to ensure proper blade speed and sufficient airflow for effective grass discharge.
5. Adjust mowing frequency according to grass growth rate. Do not allow the grass to become excessively tall between cuttings.
6. During hot or dry conditions, increase cutting height slightly to reduce moisture loss and lawn stress.
7. Recommended grass height is approximately 4–5 cm (1.6–2.0 in). Do not remove more than one-third of the total grass height in a single pass. If grass is excessively tall, mow in two stages within 24 hours—first at maximum cutting height (and reduced cutting width if necessary), then at the desired height.
8. When mowing large areas, begin by making right turns to direct clippings away from shrubs, fences, driveways, and obstacles. After one or two passes, mow in the opposite direction using left turns.
9. Alternate mowing direction regularly to improve lawn appearance and uniformity.
10. If the grass collector becomes clogged, reduce forward speed. If clogging persists, inspect the blades for dullness or damaged blade wings.
11. Use caution when mowing near bushes, curbs, or obstacles. Contact may affect cutting deck alignment and damage the deck or blades.

9. MAINTENANCE

9.1 SAFETY RECOMMENDATIONS

⚠ **WARNING!**

Before cleaning or performing any maintenance, switch off the mower, remove the ignition key, and read all instructions carefully. Wear appropriate clothing and protective work gloves whenever there is a risk of hand injury.

⚠ **WARNING!**

Never operate the mower with worn, damaged, or defective components. Faulty or worn parts must always be replaced and must never be repaired. Use only original spare parts. Components that are not of equivalent quality may damage the mower and compromise the safety of the operator and others.

⚠ **IMPORTANT!**

Used oil, fuel, batteries, and other pollutants must be disposed of in accordance with local regulations. Never dispose of these materials in unauthorized locations.

9.2 SCHEDULED MAINTENANCE

Operation	Hours	Completed (Date or Time)							
1. MOWER									
1.1 Check engine oil	Before each use								
1.2 Check tire pressure	Before each use								
1.3 Check Safety devices and controls	Before each use								
1.4 Inspect mower for damage	Before each use								
1.5 Clean the entire mower	After each use								
1.6 Check blade fastening and sharpness	Every 25 hours								
1.7 Check transmission belt	Every 25 hours								
1.8 Check the blade belt	Every 25 hours								
1.9 Check bolts and screws	Every 25 hours								
1.10 General lubrication	Every 25 hours								
1.11 Replace blades	Each 100 hours								
1.12 Annual maintenance inspection (Authorized Dealer or Service Center)	Every year								
2. ENGINE									
2.1 First engine oil change	Each 20 hours								
2.2 Engine oil change	Each 50 hours								
2.3 Clean air filter	Each 50 hours								
2.4 Check and adjust the spark plug	Each 100 hours								
2.5 Clean fuel tank and fuel filter	Each 100 hours								

2.6 Replace air filter	Every year								
2.7 Replace spark plug	Every year								

Additional Maintenance Notes

1. Refer to the engine manufacturer's manual for a complete list of maintenance procedures and recommended service intervals.
2. At the first signs of wear, contact your authorized Dealer or Service Center to replace the affected component.
3. General lubrication of all joints should also be performed whenever the mower is left unused for an extended period.

The maintenance table is intended to help maintain the mower's safety and performance. It identifies key maintenance and lubrication tasks along with their recommended service intervals. Space is provided next to each item to record the date or operating hours when the work was completed.

⚠ **WARNING!**

All inspections, adjustments, and replacements not described in Sections 9.3 and 9.4 of this manual must be performed by an authorized Dealer or Service Center. These professionals have the necessary training, tools, and expertise to carry out the work safely and correctly.

9.2.2 ENGINE

Follow all instructions provided in the engine manufacturer's manual.

When draining the engine oil, remove the oil drain plug. When reinstalling the plug, ensure the sealing washer is correctly positioned, and the plug is tightened securely.

9.2.3 BATTERY

Proper battery maintenance is essential to ensure long service life. The battery must always be fully charged:

- Before operating the mower for the first time after purchase
- Before storing the mower for an extended period
- Before returning the mower to service after a long period of inactivity

Carefully read and follow the battery charging instructions provided with the battery. Failure to follow these instructions may permanently damage the battery cells.

A discharged battery must be recharged as soon as possible.

Recharge the battery using only a constant-voltage battery charger. The use of other charging methods may cause irreversible damage to the battery.

9.3 CHECKS AND ADJUSTMENTS

The cutting deck must be correctly adjusted to ensure optimal cutting performance.

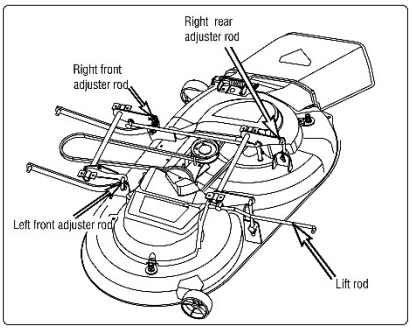

NOTE:

For best cutting results, the front of the cutting deck should be 5–6 mm (0.2–0.24 in) lower than the rear.

Proceed as follows:

- Park the mower on a flat, level surface and check tire inflation pressure.
- Place 30 mm blocks under the front edge of the cutting deck and 35 mm blocks under the rear edge.
- Set the cutting-height adjustment lever to position "2."
- Adjust the left front, right front, and right rear adjuster rods so the cutting deck rests evenly on the blocks.
- Adjust the lift rod as necessary to maintain full contact between the deck and the blocks.

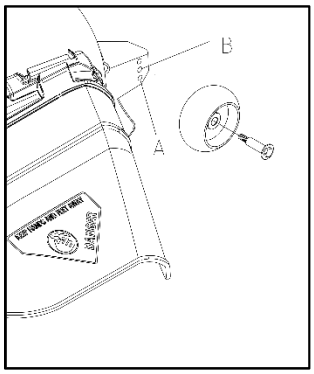

On level lawns, the wheel position may be adjusted if a lower cutting height is required.

⚠ **IMPORTANT!**

When mowing in heavy lawn conditions, the wheels must be set in **hole A**.
If you have any questions, contact your authorized retailer.

9.4 DISMANTLING AND REPLACEMENT

9.4.1 REPLACING WHEELS

Park the mower on level ground and place a suitable block under a load-bearing section of the frame on the side where the wheel will be replaced.
The wheels are secured with a snap ring. Carefully remove the snap ring using a screwdriver.

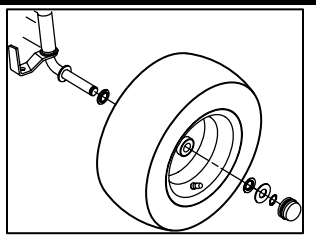

NOTE:

If one or both rear wheels are replaced, ensure that both rear wheels are the same diameter. After replacement, verify that the cutting deck remains level to prevent uneven cutting. Ensure the key and washer are correctly positioned and fully seated.

⚠ **IMPORTANT!**

Before reinstalling the wheel, apply grease to the axle. Reinstall the supporting washer and secure the snap ring properly.

9.4.2 REPLACING AND REPAIRING THE TIRES

All tires are tubeless. Any punctures or tire damage must be repaired by a qualified tire repair technician using procedures approved for tubeless tires.

9.4.3 REPLACING A FUSE.

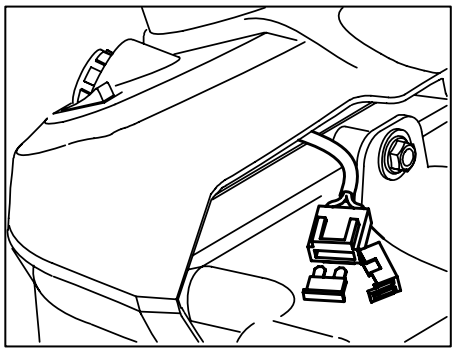

The mower is equipped with 10 A fuses. If a fuse blows, the mower's operation will stop, the dashboard lights will turn off, and starting difficulties may occur as the battery discharges. Remove the faulty fuse and replace it with a fuse of the same type and amperage rating.

⚠ **IMPORTANT!**

Always use a replacement fuse with the same type and amperage rating. Never install a fuse with a different rating.

9.4.4 DISMANTLING, REPLACING, AND REMOUNTING THE BLADES.

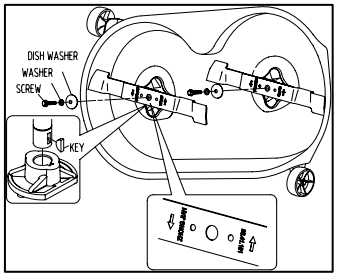

⚠ **WARNING!**

Always wear protective work gloves when handling blades. Before inspecting or removing blades, stop the engine and disconnect the spark plug wire.

⚠ **WARNING!**

Damaged or bent blades must always be replaced. Never attempt to repair blades.

Use only original blades bearing the “Zhong Jian” identification. Ensure blades are properly balanced and installed in the correct position. Refer to the direction of rotation and identification markings on each blade.

Approved blade models are listed in the Specifications section.

1. **Dismantling**
   - Loosen the blade fastening bolt by turning counterclockwise.
2. **Remounting**
   - Ensure the printed code on the blade faces the operator during installation.
   - Verify the concave side of the disc washer faces and presses against the blade.
   - Reinstall the shaft hubs, ensuring all keys are seated securely.
3. **Tightening the screws**
   - Tighten the blade bolts clockwise using a torque wrench set to 40–45 Nm (29–33 lb.-ft).

9.4.5 REPLACING THE BELT.

Belt replacement must be performed by an authorized service center. Replace belts immediately if any signs of wear are observed.

⚠ **WARNING!**

Use only genuine replacement belts. Failure to do so may result in malfunction or damage.

9.5 LUBRICATION

Apply grease to the lubrication points shown using a grease gun. Apply 2 to 3 strokes of grease to each point and wipe away any excess.
Lubricate the specified points with engine oil. Clean the area thoroughly before applying a few drops of oil, then wipe off any excess.

⚠ **IMPORTANT!**

Do not allow grease or oil to come in contact with belts, brake components, or tires. Contact with oil or grease may cause premature wear, component failure, or unsafe operation.

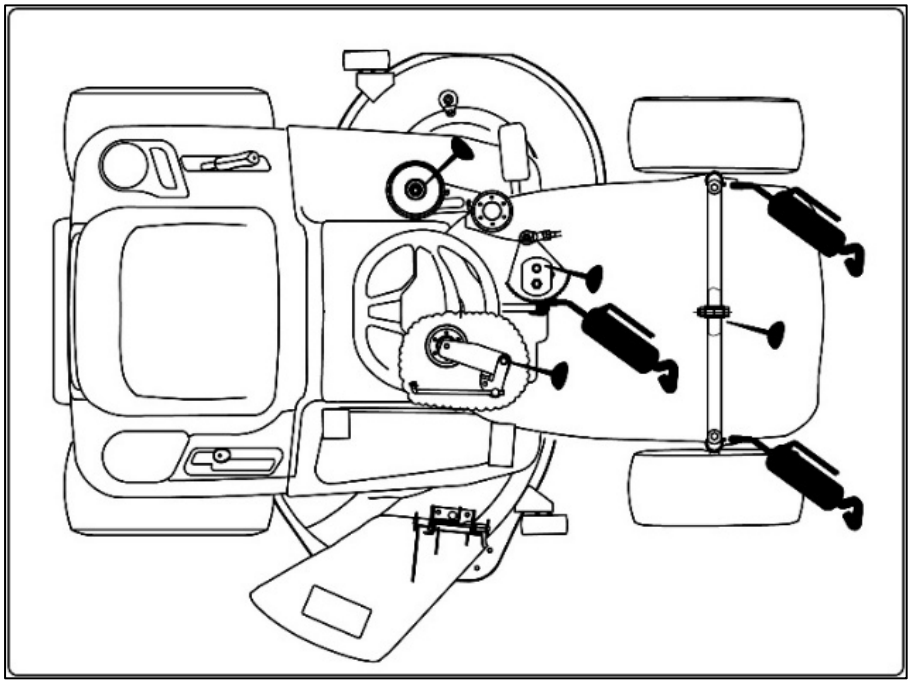

10. TROUBLESHOOTING

⚠ **WARNING!**

Risk of serious injury from accidental engine start.

Before inspection, adjustment, or repairing the mower, always:

- Turn off the engine.
- Remove the ignition key.
- Engage the parking brake.
- Allow all moving parts to come to a complete stop and the engine to fully cool.
- Disconnect the spark plug wire to prevent accidental engine startup.

Many operating issues have simple causes that the operator may be able to correct. If the problem persists or you are unsure how to proceed, contact an authorized dealer or service center.

Problem	Possible Cause(s)	Remedy
Lighting does not function	Headlight wire connector disconnected.	Turn the ignition key to the **STOP** position and connect the headlight wire
	Defective bulbs	Turn the ignition key to **STOP** and replace the bulbs
	Battery not connected correctly.	Connect the red cable to the **(+)** terminal and the black cable to the **(–)** terminal
	Defective ignition switch	Replace the ignition switch.
	Defective battery	Test, recharge, or replace the battery as necessary.
	Short circuit in the wiring harness	Contact your authorized dealer or service center.

Problem	Possible Cause(s)	Remedy
The starter motor will not turn the engine.	Starting conditions not met	Verify that all starting conditions are satisfied (see Section 5.4.1).
	No fuel in the tank.	Turn the ignition key to **STOP** and refuel (see Section 5.3.3)
	Poor contact between the battery cable and the terminal.	Check and clean the battery connections. (see Section 3.4)
	Battery discharged or defective	Test and recharge or replace the battery.
	Defective fuse	Replace the fuse. If the fuse continues to blow, determine and correct the cause (typically a short-circuit). (see Section 6.4.3)
	Clogged air filter	Clean or replace the air filter.
	Defective spark plug.	Check that the spark plug wire is securely connected. Clean or replace the spark plug as necessary.
	Defective brake pedal.	Contact your authorized dealer or service center.
	Clutch/brake switch not engaged	Ensure the PTO switch is in the OFF position (see Section 4.3).
	Defective start relay	Replace the start relay.
	Defective ignition switch (start position)	Replace the ignition switch.

Problem	Possible Cause(s)	Remedy
The engine runs unevenly	Carburetor malfunction	Contact your authorized dealer or service center.
	Air filter blocked	Clean or replace the air filter. (See engine manual)
	Fuel tank ventilation blocked.	Check and replace the fuel filter if necessary (see engine manual or contact your authorized Dealer or Service Center). Empty the fuel tank and refill with fresh fuel.
	The grass height is too high	Reduce travel speed and/or raise the cutting height according to grass conditions.
The engine feels weak	Air filter blocked.	Clean or replace the air filter. (See engine manual)
	Engine speed too low	Increase throttle.
	Travelling speed too high.	Reduce travel speed.
	Defective spark plug	Replace the spark plug (see engine manual).
	Fuel tank ventilation is blocked	Check and replace the fuel filter if necessary (see engine manual or contact your authorized Dealer or Service Center). Empty the fuel tank and refill with fresh fuel.

Problem	Possible Cause(s)	Remedy
The battery does not charge	Defective fuse.	Replace the fuse. If the fuse continues to blow, identify and correct the cause (typically a short circuit) (see Section 6.4.3).
	Poor contact between battery terminals and cables.	Inspect, clean, and tighten all battery connections (see Section 3.4).
The machine does not move	Parking brake is engaged	Press and hold the brake pedal, release the parking brake, then slowly release the brake pedal to begin machine movement (see Section 5.4.2).
	Gearbox disengaged (Hydrostatic Gear)	Engage the gearbox (see Section 5.3.5).
	Drive belt detached	Reinstall the drive belt correctly.
	Drive belt worn or defective	Replace the drive belt.
Strong vibrations	Blades loose.	Inspect and tighten all blades to the specified torque (see Section 6.4.4) or contact your authorized Dealer or Service Center.
	Engine mounting bolts loose	Inspect and tighten all engine and frame mounting bolts.
	Blade imbalance due to damage	Contact your authorized Dealer or Service Center.
	Cutting deck packed with grass	Clean the cutting deck assembly.
	Engine mounting not secure	Tighten engine mount fasteners or contact your authorized Dealer or Service Center.
	Damaged belt	Replace the belt

Problem	Possible Cause(s)	Remedy
Uneven or poor cutting results	Blades dull or worn	Sharpen or replace the mowing blades
	Unequal tire pressure (left vs. right side)	Check and adjust tire pressure (see Section 5.3.2).
	Cutting deck improperly adjusted	Check and adjust the cutting deck (see Section 6.3) or contact your authorized Dealer or Service Center.
	Grass too long and/or wet	Adjust the cutting height and reduce travel speed to suit mowing conditions.
	Travel speed too high	Reduce travel speed.
	Grass buildup under the cutting deck	Thoroughly clean the underside of the cutting deck using a suitable cleaning tool or accessory.
	Cutting drive belt slipping	Replace the cutting drive belt.

If the problem persists after performing the procedures above, contact your authorized Dealer or Service Center.

Blade screw tightening torque	**40–45 Nm**
Cutting height (7 positions)	**30 – 90 mm**
Front tires	**15 × 6.00-6**
Rear tires	**18 × 8.50-8**
Front tire inflation pressure	**1.2 bar**
Rear tire inflation pressure	**1.0 bar**
Electrical system	**12 V DC**
Battery capacity	**18 Ah**
Minimum turning radius	**45 cm**
Fuel tank capacity	**7.5 L**

11. EXPLODED VIEWS AND PARTS

ENGINE ASSEMBLY

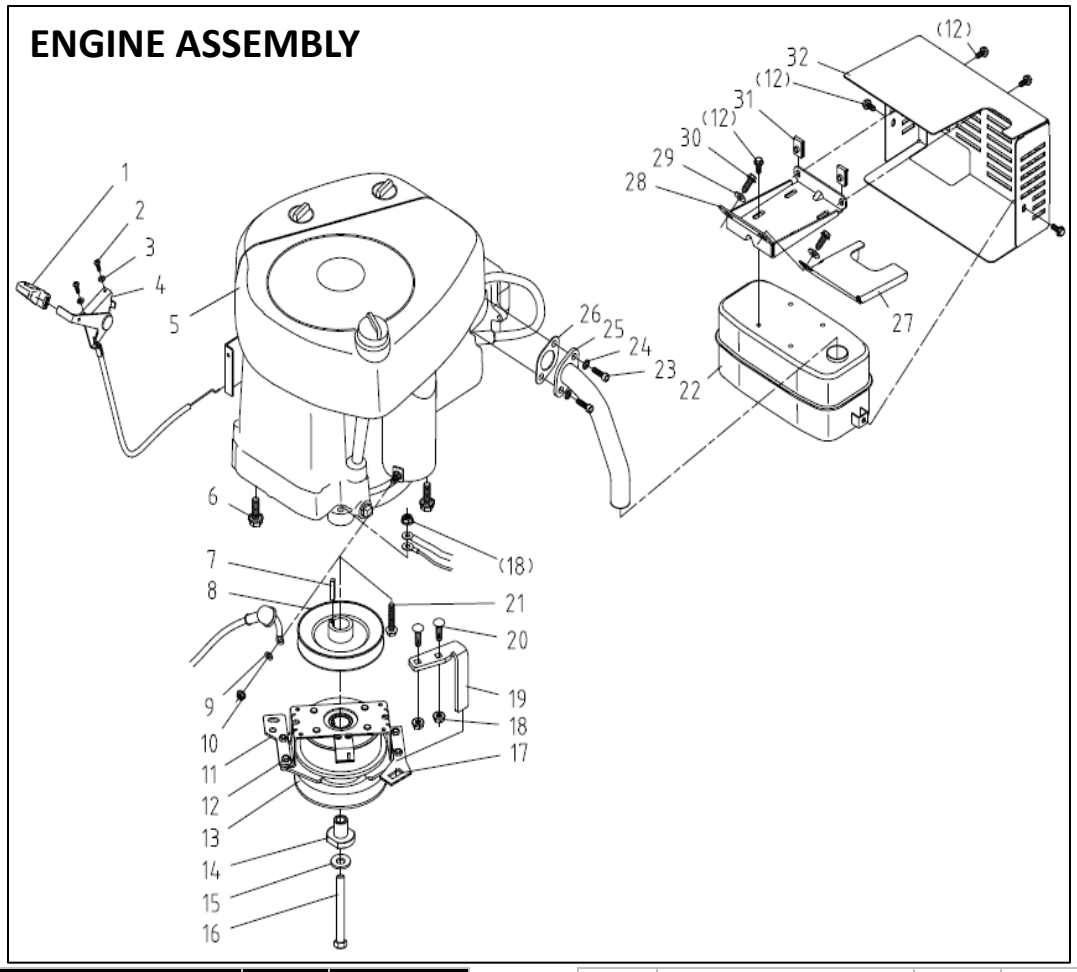

NO	PART NAME	QTY	PART #
1	CHOKE KNOB	1	20084362
2	SCREW M4×16	2	20051803
3	WASHER 4	2	20061531
4	THROTTLE CABLE	1	20071241
5	ENGINE	1	20095437
6	TAPPING SCREW 3/8"-16-1 1/4"	3	20061285
7	FLAT KEY 6.35×30	1	20070519
8	ENGINE PULLEY WELDMENT	1	20071187
9	WASHER 6	1	20061482
10	NUT 1/4-20 UNC	1	20071191
11	SUPPORT	1	20088530
12	TAPPING SCREW M6x16	12	20082800
13	ELECTROMAGNETIC CLUTCH (SIDE ROW)	1	20093233
14	CLUTCH STEP BUSHING	1	20085758
15	TAPER WASHER 12	1	20078309
16	BOLT, 7/16"-20- 3", UNF	1	20093810
17	CLUTCH CLAMP PLATE	1	20085121
18	FLANGE LOCK NUT M8	3	20061348
19	CLUTCH BAFFLE (SMALL BIN)	1	20093071
20	BOLT M8×20	2	20061299
21	FLANGE BOLT M8×40	1	20061254
22	MUFFLER	1	20071214
23	SCREW 5/16"-18 -3/4"	2	20060850
24	SPRING WASHER 5/16"	2	20061453
25	EXHAUST PIPE	1	20095556
26	GASKET	1	20071192
27	REAR SHIELD	1	20095299
28	BRACKET	1	20084296
29	BIG WASHER 8	2	20061541
30	FLANGE BOLT 5/16-18Tx3/4	2	20082799
31	BUCKLE NUT M6	2	20070630
32	FRONT SHIELD	1	20095300

FUEL TANK ASSEMBLY

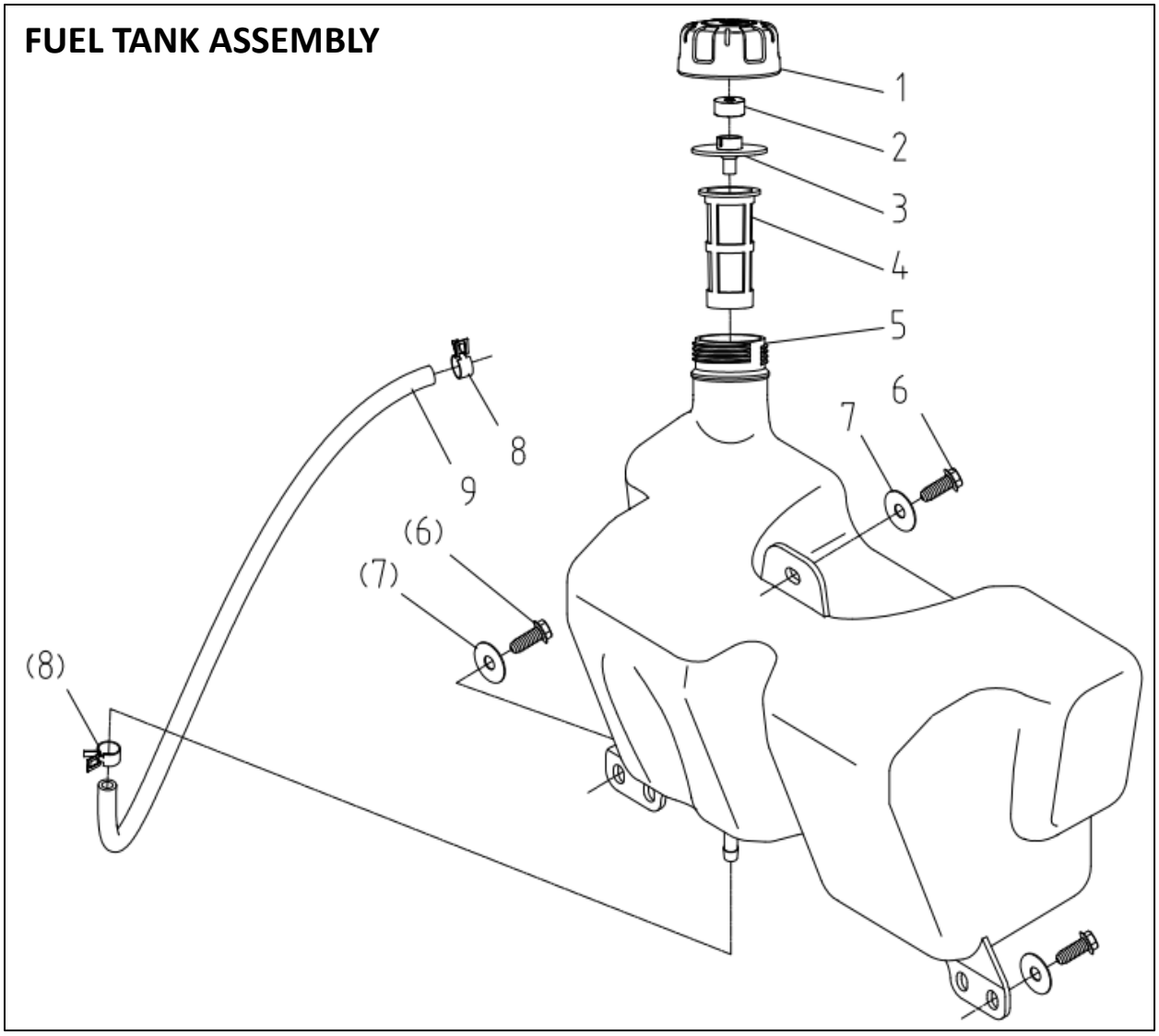

NO	PART NAME	QTY	PART #
1	FUEL TANK CAP	1	20098708
2	SPONGE	1	20096576
3	FUEL TANK CAP SEAL	1	20098707
4	FILTER CAP	1	20059766
5	FUEL TANK	1	20071228
6	TAPPING SCREW M6x1	3	20082800
7	GASKET 6×25×1.5	3	20071676
8	CLIP ϕ10	2	20062744
9	FUEL HOSE	1	20070865

HYDRO TRANSMISSION

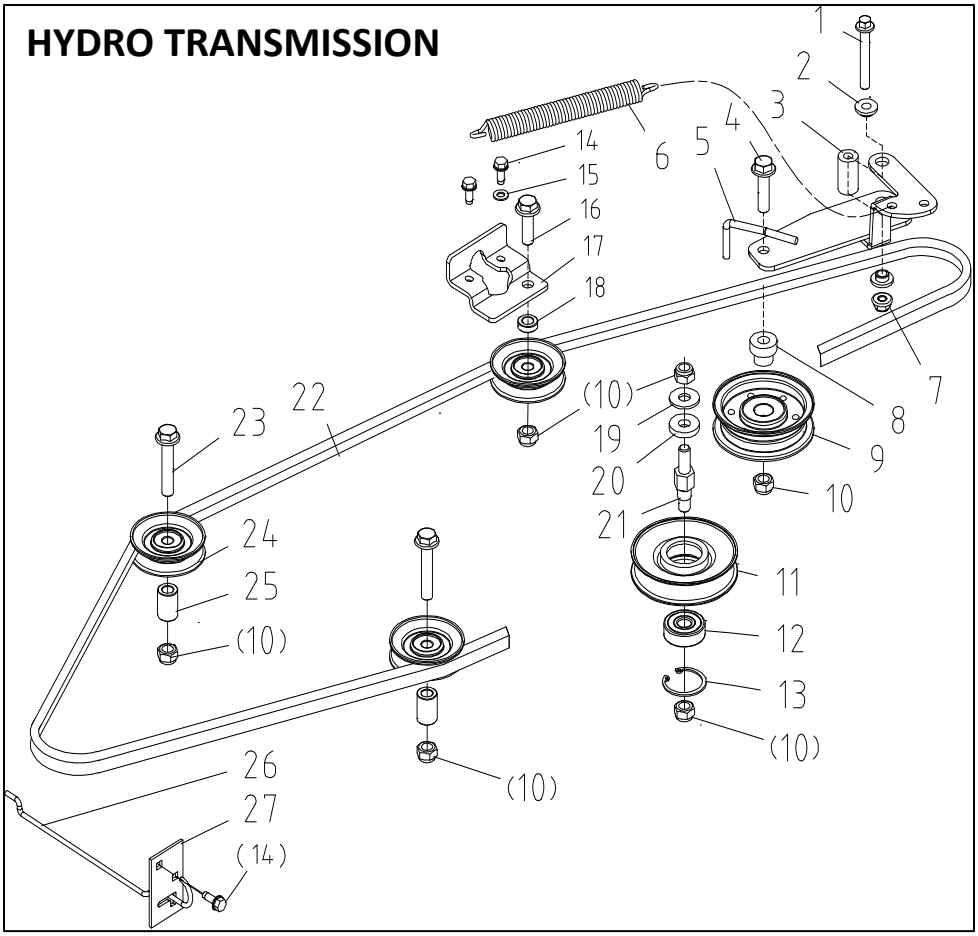

NO	PART NAME	QTY	PART #
1	FLANGE BOLT M8×60	1	20061275
2	BUSHING	2	20070780
3	SPACER ¢8x¢18x33	1	20084436
4	FLANGE BOLT M10×1.25×40	1	20062521
5	DRIVING TENSION ARM WELDMENT	1	20090612
6	SPRING	1	20070875
7	FLANGE NUT M8	1	20061336
8	TENSION PULLEY BUSHING	1	20071180
9	TENSION PULLEY	1	20071213
10	LOCK NUT M10×1.25	6	20061403
11	TENSION PULLEY	1	20070536
12	BEARING 6301-2RS	1	20092588
13	SNAP RING 37	1	20061549
14	TAPPING SCREW M6x16	4	20082800
15	WASHER 6	1	20061482
16	FLANGE BOLT M10×1.25×35	1	20061284
17	GUIDE PULLEY BASE PLATE	1	20088482
18	WASHER ¢10x¢18x7	1	20088483
19	BIG WASHER 10	1	20061542
20	WASHER ¢27x¢10.5x5	1	20062499
21	TENSIONING WHEEL BOLT	1	20084441
22	V BELT LG4-1050（HA2645）	1	20084444
23	FLANGE BOLT M10×1.25×50	2	20062515
24	DRIVING GUIDE PULLEY	3	20071208
25	GUIDE PULLEY CUSHION SLEEVE	2	20084442
26	OIL DISCHARGE PUSH ROD	1	20084654
27	OIL DRAIN ROD SEAT	1	20084655

FRAME ASSEMBLY

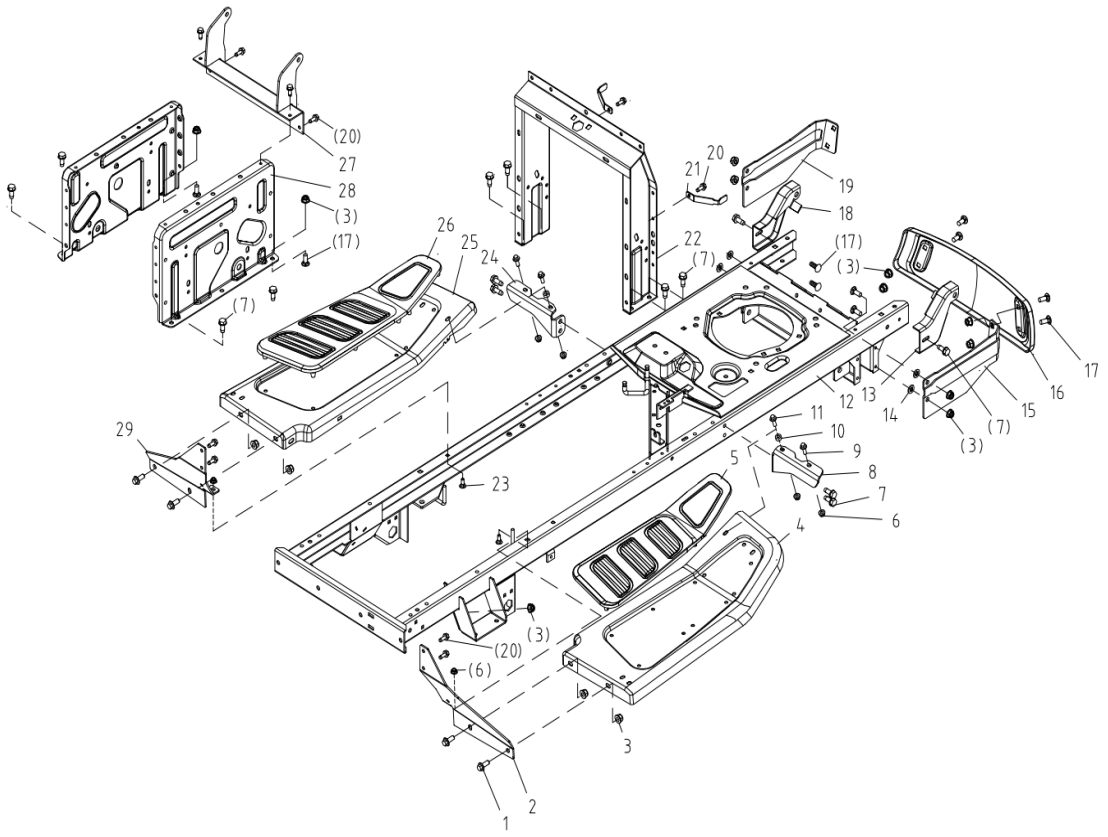

NO	PART NAME	QTY	PART #
1	FLANGE BOLT M8×20	4	20085664
2	RIGHT PEDAL HANGER	1	20084428
3	FLANGE LOCK NUT M8	14	20061348
4	RIGHT PEDAL	1	20084430
5	RIGHT FOOT PAD	1	20084393
6	HEXAGON FLANGE LOCK NUT M6	6	20061385
7	FLANGE BOLT 5/16-18Tx3/4	14	20082799
8	PEDAL FRONT SUPPORT RIGHT	1	20084427
9	FLANGE BOLT M6×16	2	20061200
10	BUSHING	2	20070916
11	FLANGE BOLT M6×25	2	20061196
12	CHASSIS	1	20097093
13	ENGINE COVER BRACKET RIGHT	1	20084375
14	WASHER 6, LOCK	2	20062405
15	RIGHT BAMPER ROD	1	20095181
16	BAMPER	1	20085086
17	BOLT M8×20	10	20061299
18	ENGINE COVER BRACKET LEFT	1	20084403
19	LEFT BAMPER ROD	1	20095166
20	TAPPING SCREW M6x16	10	20082800
21	STEERING	2	20084384
22	STEERING BRACKET	1	20097072
23	BOLT M6x16	2	20061289
24	PEDAL FRONT SUPPORT LEFT	1	20084422
25	LEFT PEDAL	1	20084429
26	LEFT FOOT PAD	1	20084388
27	SEAT FRONT BEAM WELDMENT	1	20084417
28	SIDE PLATE	2	20084399
29	LEFT PEDAL HANGER	1	20084414

FRONT TIRE ASSEMBLY

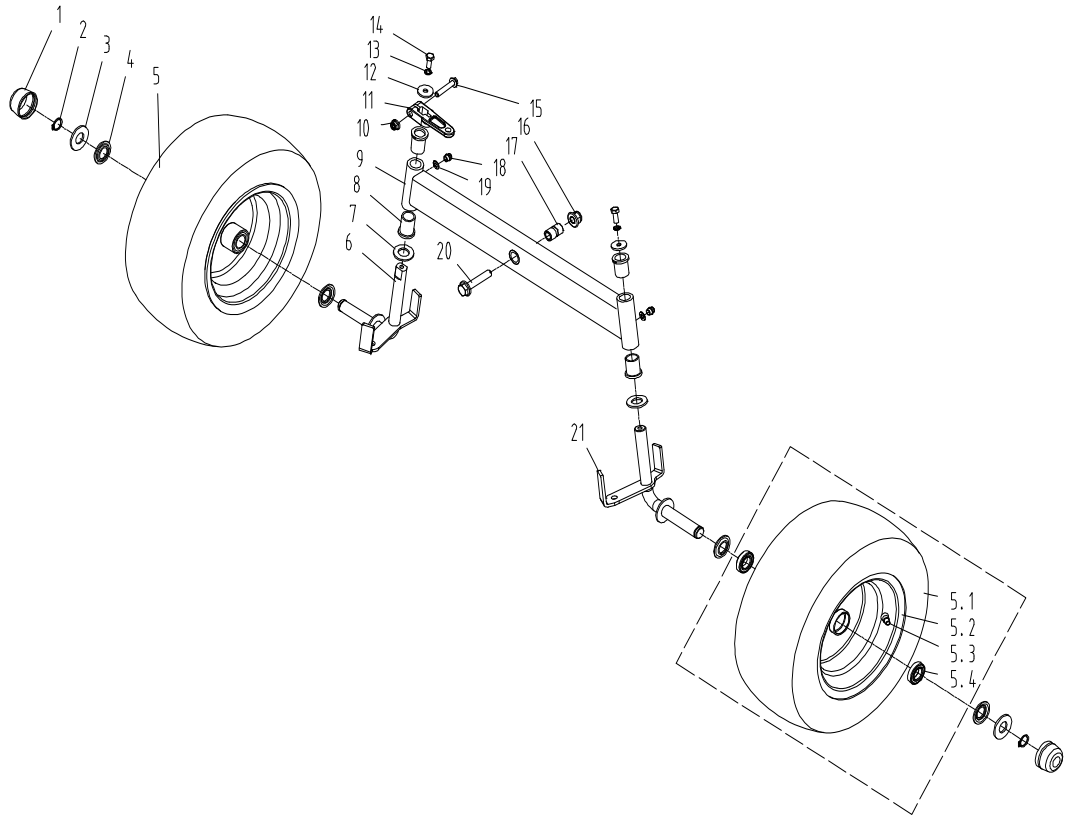

NO	PART NAME	QTY	PART #
1	HUB COVER	2	20068187
2	SNAP RING 19	2	20061488
3	WASHER ϕ20×ϕ43×3	2	20071143
4	WASHER	4	20071144
5	FRONT WHEEL ASSEMBLY	2	20086529
5.1	FRONT WHEEL ASSEMBLY	2	20083980
5.2	FRONT WHEEL ASSEMBLY	2	20071149
5.3	VALVE	2	20061665
5.4	BEARING 61904-2RZ	4	20061595
6	FRONT AXLE RH	1	20084372
7	WASHER 20	2	20061444
8	BUSHING	4	20070566
9	FRONT AXLE WELDMENT	1	20084364
10	FLANGE LOCK NUT M8	1	20061348
11	TURNING ARM	1	20070941
12	WASHER	2	20091656
13	SPRING WASHER 8	2	20061533
14	BOLT M8×20	2	20061291
15	FLANGE BOLT M8×45	1	20061256
16	FLANGE LOCK NUT M12×1.25	1	20061359
17	LINER TUBE	1	20084370
18	OIL INJECTION NOZZLE	2	20092292
19	WASHER6	2	20061482
20	FLANGE BOLT M12×1.25×55	1	20085752
21	FRONT AXLE LH	1	20084367

STEERING ASSEMBLY

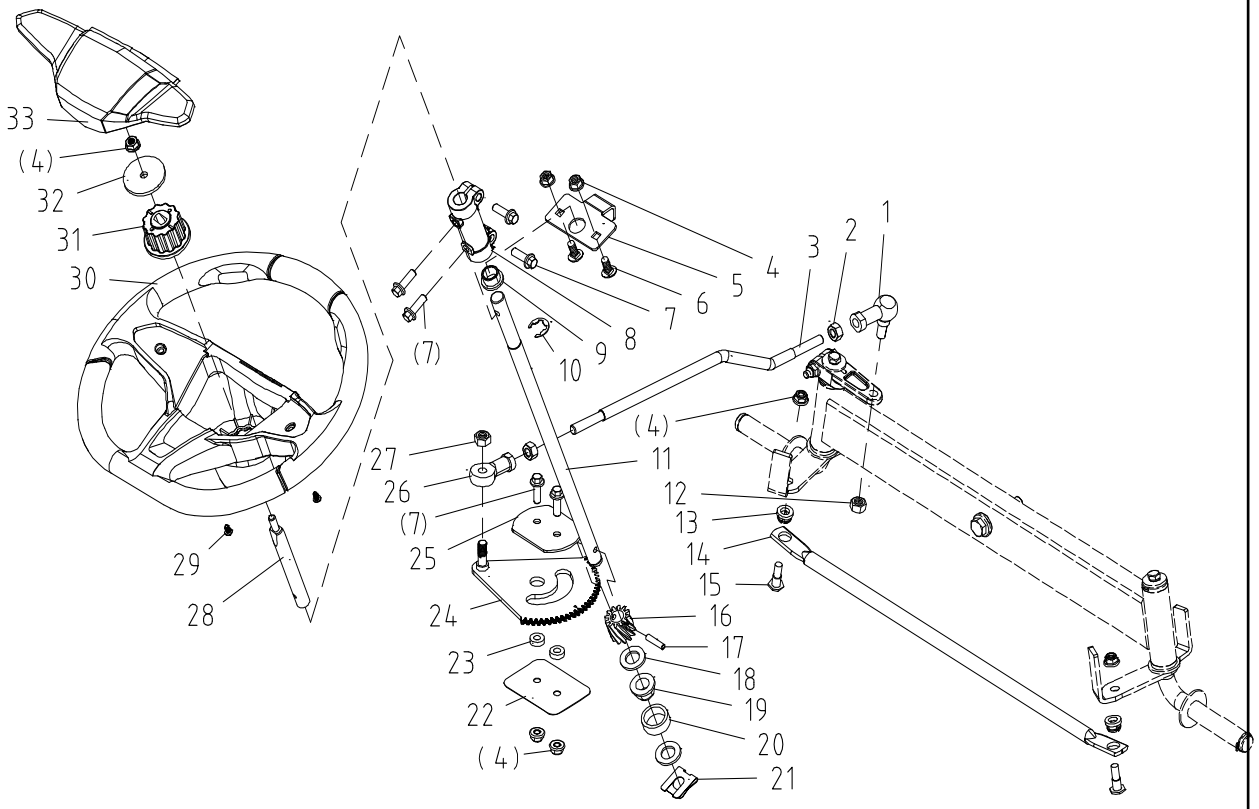

NO	PART NAME	QTY	PART #
1	JOINT BEARING M10	1	20085366
2	NUT M10	2	20061399
3	STEERING DRAG ROD	1	20084461
4	FLANGE LOCK NUT M8	7	20061348
5	SQUARE HOLE CARDBOARD	1	20084463
6	SCREW M8×20	2	20061299
7	FLANGE BOLT M8×25	6	20061298
8	COUPLINGS	1	20083389
9	HATCH BUSHING	1	20082643
10	SNAP RING 15	1	20061548
11	STEERING COLUMN	1	20084458
12	LOCK NUT M10	1	20061419
13	ELASTIC RUBBER BUSH	2	20084462
14	STEERING DRAG ROD	1	20084456
15	PIN SCREW M8×28	2	20084459
16	STEERING GEAR LEFT	1	20084457
17	PIN 6×25	1	20097032
18	WASHER 16	2	20061437
19	HEXAGON BUSHING	1	20070612
20	BUSHING	1	20071127
21	SNAP RING 16	1	20085898
22	TIE PLATE	1	20070939
23	BUSHING	2	20070932
24	STEERING GEAR PLATE WELDMENT	1	20084464
25	DOUBLE HOLE BOARD	1	20070942
26	JOINT BEARING SIJK10C	1	20061641
27	LOCK NUT M10×1.25	1	20061403

28	STEERING WHEEL ROD A	1	20084465
29	TAPPING SCREW ST4.8x16	2	20051824
30	STEERING WHEEL	1	20082707

31	SPLINED HUB	1	20079969
32	WASHER	1	20082683
33	STEERING WHEEL CAP	1	20082679

BRAKE ASSEMBLY

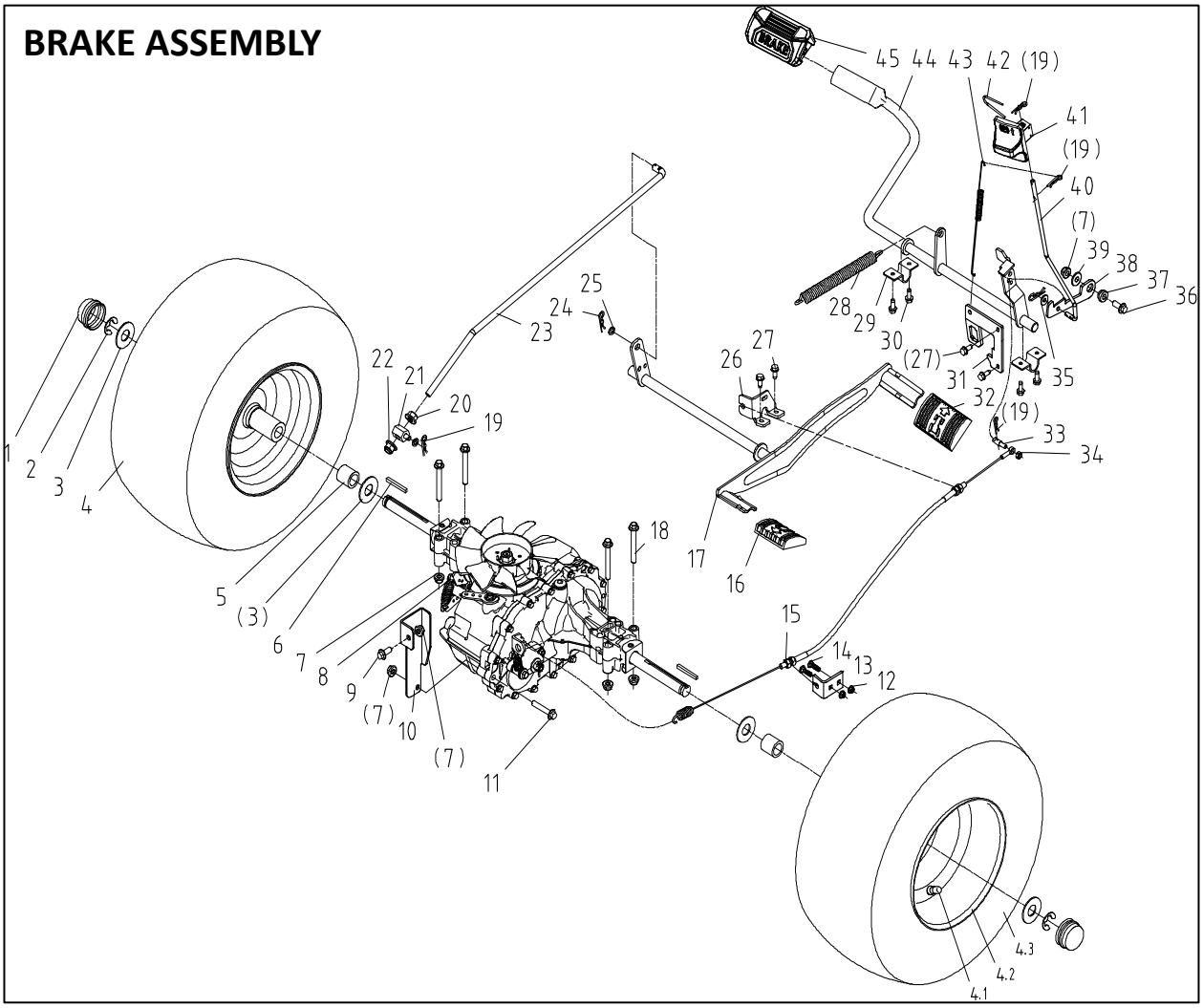

NO	PART NAME	QTY	PART #
1	HUB COVER	2	20068187
2	RETAINER RING 15	2	20061430
3	WASHER ϕ20×ϕ43×3	4	20071143
4	REAR WHEEL ASSEMBLY	2	20086530
4.1	VALVE	2	20061665
4.2	REAR HUB	2	20089809
4.3	REAR VACUUM TIRES	2	20093132
5	REAR WHEEL PADS	2	20071171
6	FLAT KEY 4.85×60	2	20071174
7	FLANGE LOCK NUT M8	7	20061348
8	TRANSAXLE, HYDRO, LONGXING	1	20089029
9	FLANGE BOLT M8×20	1	20085664
10	HYDRAULIC BRIDGE REAR FIXING PLATE (NON-352 ENGINE)	1	20085923
	REAR AXLE CONNECTION PLATE WELDING (WITH 352 ENGINE)	1	20096876
11	FLANGE BOLT M8×50	1	20061230
12	FLANGE LOCK NUT M6	2	20061385
13	CABLE SUPPORT	1	20085192
14	BOLT M6x16	2	20061289
15	BRAKE CABLE（k46)	1	20088865
16	REVERSE PEDAL	1	20068229
17	FOOT LEVER WELDMENT	1	20098545
18	FLANGE BOLT 8×65	4	20061310
19	COTTER PIN	5	20070582
20	HEXAGON NUT 10x1.25	1	20061369
21	PULL ROD PIN	1	20096503
22	LOCK NUT M10×1.25	1	20061403
23	TRAVELING PULL ROD （K46）	1	20085194
24	SPRING PIN	1	20070576
25	WASHER 10	1	20061497
26	CABLE FIXING PLATE	1	20088861
27	Tapping SCREW M6x16	4	20082800
28	BRAKE RESET TENSION SPRING	1	20084574
29	U-SHAPED CLAMP	2	20089912
30	FLANGE BOLT 5/16-18Tx3/4	4	20082799
31	BRAKE SWITCH SEAT PLATE	1	20089015
32	FORWARD PEDAL	1	20068230
33	BOW-TIE COTTER PIN 2 (K46)	1	20086191
34	LOCK NUT M6	1	20061421
35	WASHER 6	1	20061482
36	FLANGE BOLT M8×25	1	20061250
37	STEP COVER	1	20088842
38	PARKING HOOK	1	20090105
39	BIG WASHER 8	1	20061541
40	DRAG LINK, BRAKE PARKING	1	20090104
41	BRAKE HANDLE RAL3002	1	20085155
42	U BOLT	1	20084581
43	CLUTCH LEVER SPRING	1	20070894
44	BRAKE FOOT BAR WELDMENT (MANUAL)	1	20092450
45	BRAKE PEDAL	1	20082728

SEAT ASSEMBLY

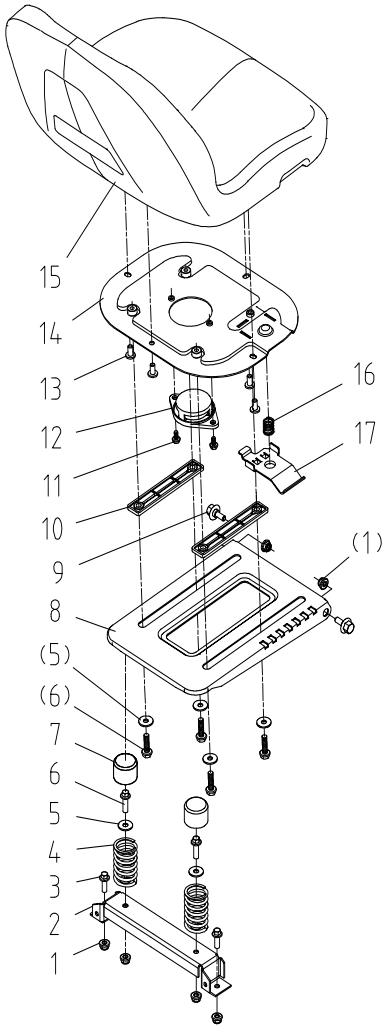

NO	PART NAME	QTY	PART #
1	FLANGE LOCK NUT M8	6	20061348
2	SEAT BACK BEAM	1	20084447
3	FLANGE BOLT M8×20	2	20085664
4	SEAT SPRING	2	20070964
5	BIG WASHER	6	20061541
6	FLANGE BOLT M8×25	6	20061298
7	SPRING CAP	2	20068240
8	ADJUSTABLE SEAT BASE PLATE	1	20092225
9	SEAT SCREWS	2	20088755
10	SEAT CUSHION STRIP	2	20088754
11	TAPPING SCREW M6x16	2	20082800
12	SEAT SWITCH COMPONENTS	1	20088756
13	HEXAGON SOCKET FLAT ROUND HEAD SCREW M8x20, GB/T70.2	4	20062556
14	SEAT PLATE	1	20091256
15	SEAT ZJZY2-3	1	20092693
16	SPRING	1	20091602
17	SEAT ADJUSTMENT PLATE	1	20092317

SUSPENSION ASSEMBLY

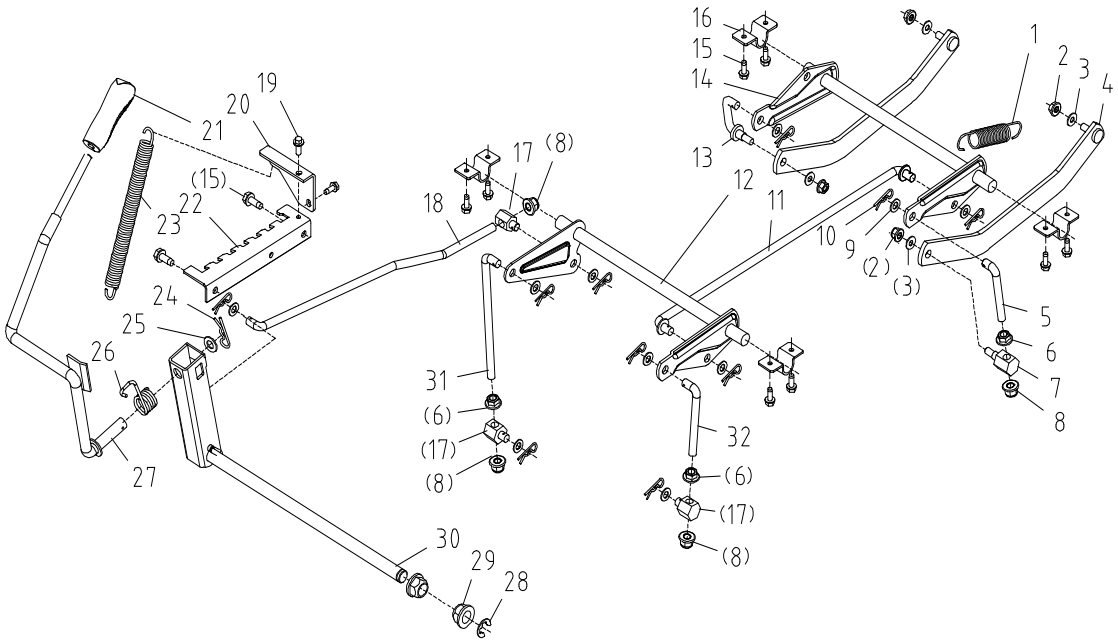

NO	PART NAME	QTY	PART #
1	SPRING	1	20095090
2	FLANGE LOCK NUT M8	4	20061348
3	BIG WASHER	4	20061541
4	FRONT STAY BAR WELDMENT	2	20093410
5	FRONT RIGHT WELDMENT	1	20084557
6	HEXAGON NUT 10x1.25	3	20061369
7	PIN	1	20084533
8	FLANGE LOCK NUT M10×1.25	4	20061405
9	WASHER 10	10	20061497
10	SPRING PIN	10	20070576
11	LIFTING LINK ROD WELDMENT (SIDE ROW)	1	20095494
12	REAR ARM WELDMENT (SIDE ROW)	1	20084723
13	U-SHAPED WELDED FITTINGS	1	20084553
14	FRONT ARM WELDMENT	1	20084560
15	FLANGE BOLT 5/16-18Tx3/4	10	20082799
16	U-SHAPED CLAMP	4	20089912

17	PIN JOINT TTM86S, ELECTROPLATED	3	20085750
18	LIFTING PULL ROD (SIDE ROW)	1	20084726
19	TAPPING SCREW M6x16	2	20082800
20	SPRING HANGING PLATE TTM86, ELECTROPLATED	1	20085316
21	HANDLE	1	20070900
22	RATCHET PLATE	1	20084549
23	LIFTING BOOSTER SPRING	1	20084564
24	COTTER PIN ϕ3	1	20071251
25	WASHER 14x1.5	1	20062529
26	RIGHT SPRING	1	20071354
27	LEVEL WELDMENT	1	20084535
28	RETAINER RING 12	1	20061473
29	HEXAGON BUSHING	2	20070612
30	LEVEL WELDMENT	1	20092440
31	REAR LEFT ADJUSTING LEVER	1	20094620
32	REAR RIGHT ADJUSTING LEVER TTM86S, ELECTROPLATED	1	20094621

CUTTERHEAD ASSEMBLY

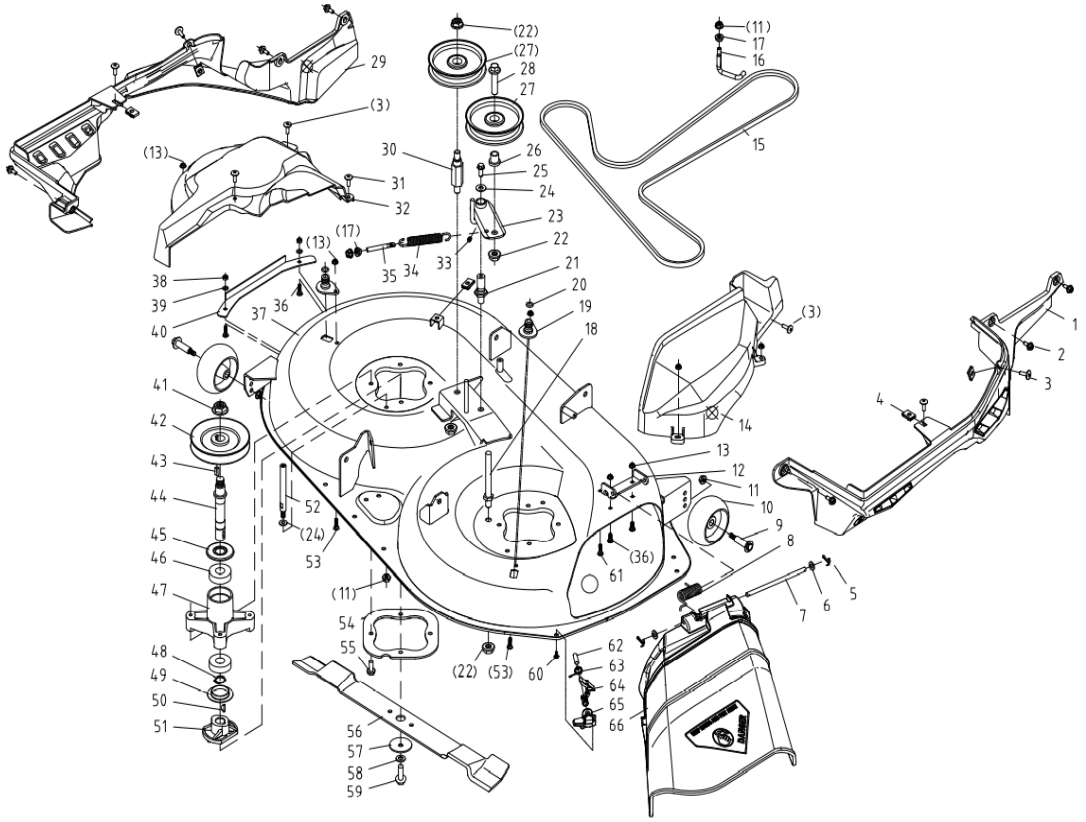

NO	PART NAME	QTY	PART #
1	BELT COVER RIGHT TTM98S/108S, BIG	1	20086269
2	HEXAGON HEAD TAPPING SCREW 6.3x11.5	6	20082801
3	SCREW M6×16	7	20060893
4	BUCKLE NUT M6	5	20070630
5	SPLIT PINS 2.5x20	2	20097934
6	WASHER 8	4	20061544
7	PINϕ8×168	1	20082335
8	TORSION SPRING	1	20086192
9	WHEEL AXLE	2	20085378
10	WHEEL	2	20088559
11	FLANGE LOCK NUT M8	3	20061348
12	HINGE	1	20098326
13	FLANGE LOCK NUT M6	7	20061385
14	RIGHT SHIELD	1	20086316
15	V BELT 4L920	1	20093639
16	CLUTCH BELT GEAR LEVER	1	20093277
17	FLANGE NUT M8	3	20061336
18	BELT STOP ROD ϕ12	1	20093232
19	WATER NOZZLE	2	20070624
20	O RING 11.2×2.65	2	20055756
21	CUT TENSION ROD	1	20093235
22	FLANGE LOCK NUT M12×1.25	4	20061359
23	CUT TENSION ARM ASSEMBLY	1	20094144
24	BIG WASHER 8	2	20061541
25	FLANGE BOLT M8x16	1	20061309
26	TENSION PULLEY CUSHION COVER	1	20084617
27	IDLENESS PULLEY	2	20070908
28	FLANGE BOLT M10×1.25×35	1	20061286
29	LEFT SHIELD TTM98S/108S, LARGE	1	20086267
30	IDLENESS PULLEY SHAFT	1	20097097
31	SCREW M6×12	1	20060923
32	LEFT SHIELD	1	20086315
33	OIL INJECTION NOZZLE	1	20092292
34	SPRING	1	20070875

35	ADJUSTING SCREW ROD TTM86S, PLATED	1	20098363
36	BOLT M6×16	4	20061289
37	DECK WELDMENT	1	20097099
38	HEXAGON LOCK NUT M6	2	20061421
39	WASHER 6	2	20061482
40	LEFT REINFORCEMENT PLATE	1	20086368
41	NUT FOR BLADE AXLE	2	20070627
42	PULLEY	2	20070638
43	FLAT KEY C6×18	2	20061650
44	BLADE SPINDLE	2	20070622
45	HOOD, BEARING	2	20071285
46	BEARING 6204-2RZ	4	20092592
47	BLADE SEAT	2	20054347
48	SNAP RING 19	2	20061488
49	HOOD, BEARING	2	20070635
50	HALFMOON KEY 4×16	2	20061651
51	SLEEVE	2	20054345
52	STUD SCREW	2	20070892
53	SCREW M6×30	2	20061249
54	CUTTERHEAD REINFORCEMENT PLATE	2	20093234
55	FLANGE BOLT M8x35	8	20061265
56	BLADE	2	20071405
57	DISH WASHER	2	20070623
58	WASHER 10	2	20061497
59	BOLT	2	20061267
60	TAPPING SCREW ST4.8×13	1	20051827
61	BOLT M6×25, GB/T12-1988	1	20061301
62	SELF-LOCKING PIN TTM86S	1	20086275
63	SELF-LOCKING TORSION SPRING TTM86S	1	20094383
64	SELF-LOCKING BUCKLE TTM86S, RAL3020	1	20086278
65	SELF-LOCKING BASE TTM86S, BLACK	1	20086277
66	DISCHARGE CHUTE	1	20086249

ELECTRICAL ASSEMBLY

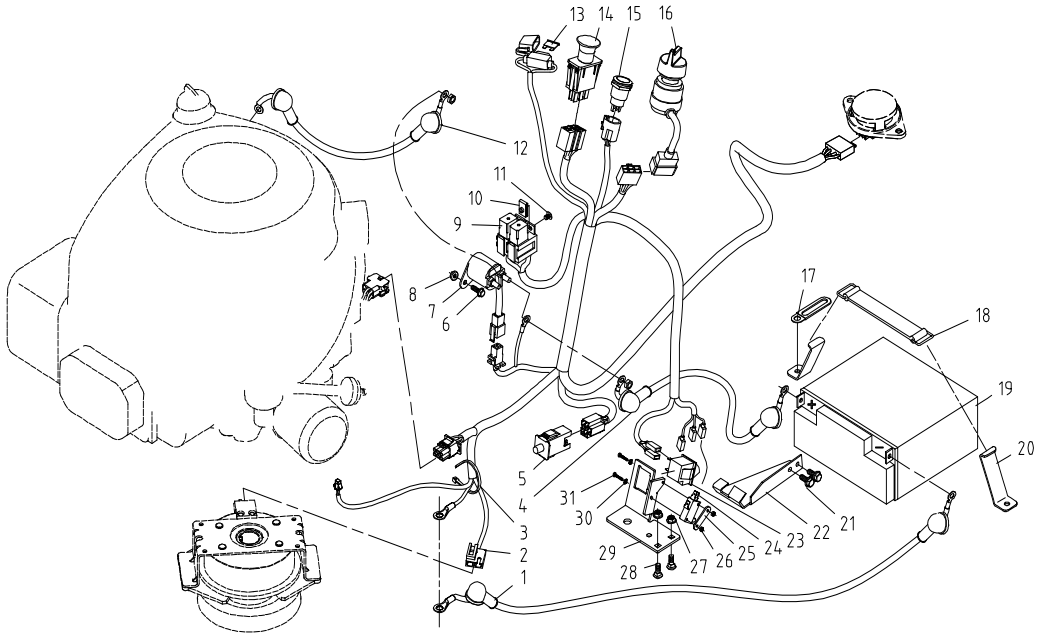

NO	PART NAME	QTY	PART #
1	GROUND CABLE	1	20085496
2	ELECTRIC CABLE (ELECTRIC START)	1	20097573
3	CABLE TIE	20	20051895
	CABLE TIE	2	20086002
4	BATTERY CABLE	1	20084624
5	SWITCH, PLUNGER	1	20093538
6	BOLT M5×16	2	20061186
7	STAR RELAY	1	20071221
8	FLANGE LOCK NUT M5	2	20061341
9	RELAY YAP23H-12-HR	2	20089006
10	BUCKLE NUT M5	1	20089880
11	SCREW M5×12	1	20061195
12	POWER CABLE	1	20084637
13	FUSE BRM148S, 20A	1	20085696
14	SWITCH, PTO	1	20097587
15	SWITCH	1	20096310
16	ELECTRIC DOOR LOCK	1	20089345
17	WIRE CLAMP	1	20089223
18	BELT	1	20070744
19	BATTERY 12V 18Ah	1	20092080
20	HOOK	2	20084632
21	TAPPING SCREW M6x1	2	20082800
22	SWITCH LEVER	1	20098553
23	SWITCH	1	20086270
24	SWITCH	1	20092446
25	WASHER	1	20098555
26	NUT M3	2	20061334
27	HEXAGON FLANGE LOCK NUT M6	2	20061385
28	BOLT M6×16	2	20061289
29	SWITCH BASE	1	20092970
30	WASHER 3	2	20084633
31	SCREW M3x20	2	20051763

HOUSING ASSEMBLY

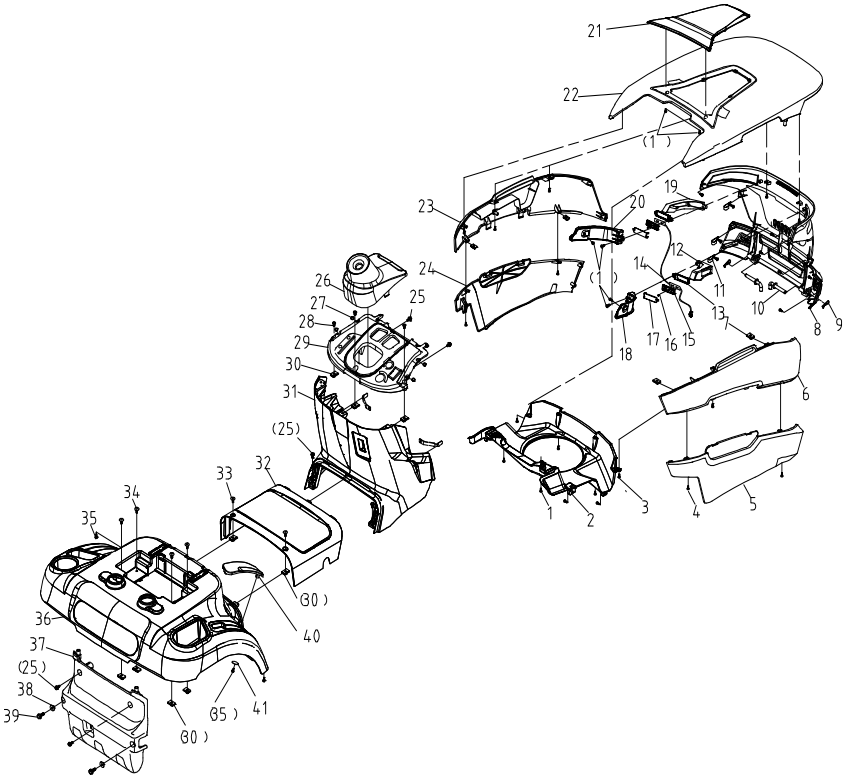

NO	PART NAME	QTY	PART #
1	SCREW ST4.8×16	28	20061038
2	AIR DIRECTOR	1	20084507
3	SCREW ST4.8×20	2	20084497
4	SCREW M5×12	4	20062522
5	RIGHT-SIDE COVER - BELOW	1	20092600
6	RIGHT-SIDE COVER - ABOVE	1	20092598
7	BUCKLE NUT M5	4	20089880
8	FRONT COVER	1	20092599
9	SPRING PIN	2	20070576
10	PIN	2	20078136
11	IGNITION WIRE CLAMP	4	20050895
12	RIGHT SEAT OF HEADLIGHT	1	20091115
13	HEADLIGHT FRONT COVER	2	20091100
14	LED LIGHT PANEL ASSEMBLY	1	20092642
15	LAMPSHADE	2	20091072
16	CROSS GROOVE PAN HEAD SELF-TAPPING SCREW ST2.9x8F	2	20051780
17	HEADLIGHT REAR COVER	2	20091050
18	RIGHT REAR COVER OF LAMP BASE	1	20091110
19	LEFT SIDE HEADLIGHTS	1	20091140
20	RIGHT REAR COVER OF LAMP BASE	1	20091110
21	TRANSPARENT COVER	1	20091126
22	HOOD	1	20092601
23	LEFT-SIDE COVER - UPPER	1	20092597
24	LEFT-SIDE COVER - LOWER	1	20092602
25	SCREW 6x16	6	20082800
26	STEERING WHEEL COVER	1	20084503
27	HANDLE ANTI-VIBRATION RUBBER	4	20075146

28	SCREW M6x16	3	20061013
29	PANEL	1	20084494
30	BUCKLE NUT M6	9	20070630
31	SHIELD	1	20091237
32	MAINTENANCE COVER	1	20084506
33	SCREW M6×16	2	20060893
34	SCREW M6×25	4	20060919
35	TAPPING SCREW ST4.8x16	2	20084298

36	SIDE DISCHARGE REAR SEAT	1	20091264
37	GEAR BOX COVER	1	20084803
38	BUSHING	2	20070780
39	FLANGE BOLT M8×20	2	20085664
40	GASKET 6.5×25×1.4	1	20071676
41	STALL DECORATIVE PLATE	1	20091266

MULCH COVER ASSEMBLY

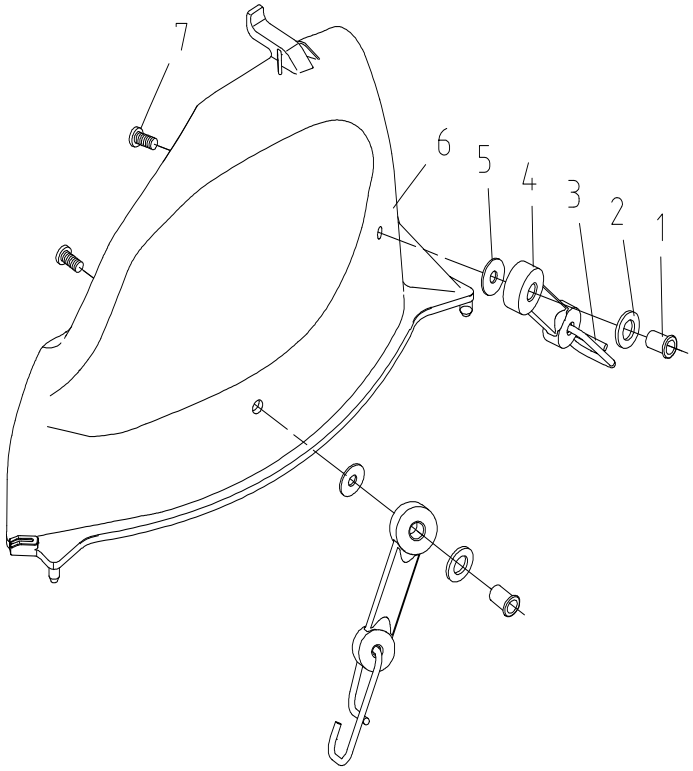

NO	PART NAME	QTY	PART #
1	NUT M6×13.5	2	20061423
2	WASHER 10	2	20061542
3	HOOK	2	20071033
4	BELT	2	20071032
5	WASHER 6	2	20061539
6	MULCH COVER TTM86S	1	20085205
	MULCH COVER TTM98S		20085128
7	SCREW M6×16	2	20061013

TOWING UNIT ASSEMBLY

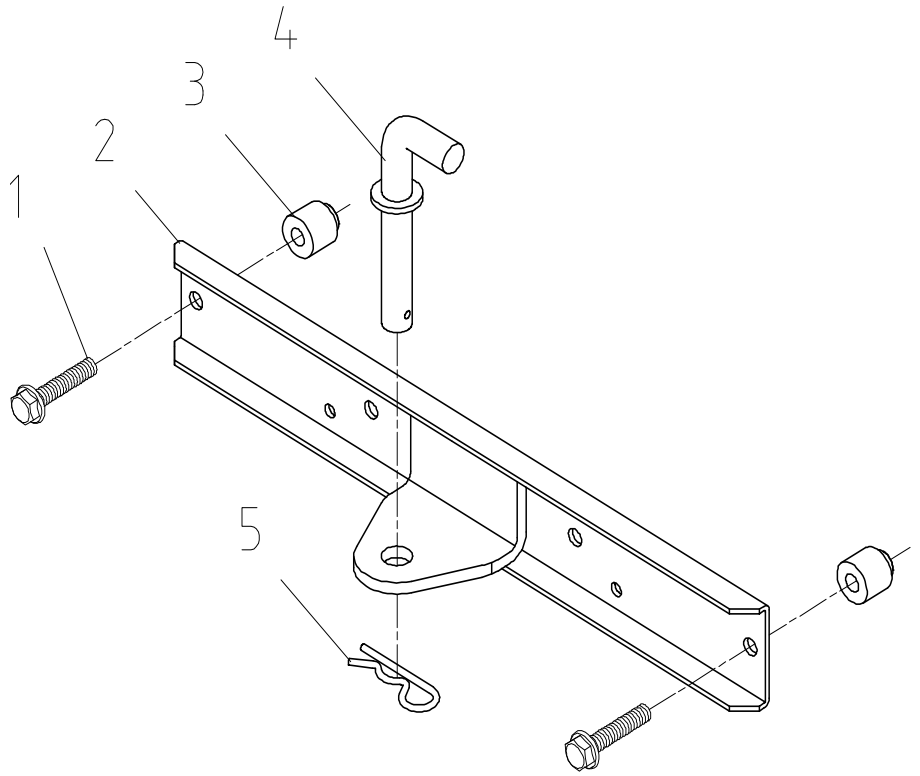

NO	PART NAME	QTY	PART #
1	FLANGE BOLT M8×40	2	20061254
2	TRACTION PLATE WELDED PARTS	1	20085158
3	TRACTION PAD COVER	2	20085165
4	TRACTION PIN WELDED PARTS	1	20086357
5	COTTER PIN ϕ3	1	20071251

PRORUN continually improves its products. As a result, you may observe minor differences between your machine and the descriptions contained in this Operator's Manual. Modifications may be made to the machine without notice and within the obligation to update this manual, provided that the essential safety and functional characteristics remain unchanged.

For questions, technical assistance, or current product specifications, please contact PRORUN Customer Service.

PRORUN / TOPSUN USA
Address: 10130 Perimeter Parkway, Suite 140
Charlotte, NC 28216
Customer Service: (844) 905-0882
Email: info@proruntech.com
Website: www.proruntools.com

ZHEJIANG ZHONGJIAN TECHNOLOGY CO., LTD
Address: No.155 Mingyuan North AVE, Economic Development Zone,
Yongkang, Zhejiang, 321300, P.R. CHINA
Email: sales@topsunpower.cc
Website: www.topsunpower.cc

MADE IN CHINA