WORKPROX

WX159053A

# ORIGINAL OPERATING INSTRUCTIONS 40V BRUSHLESS ELECTRIC POWERED WHEELBARROW

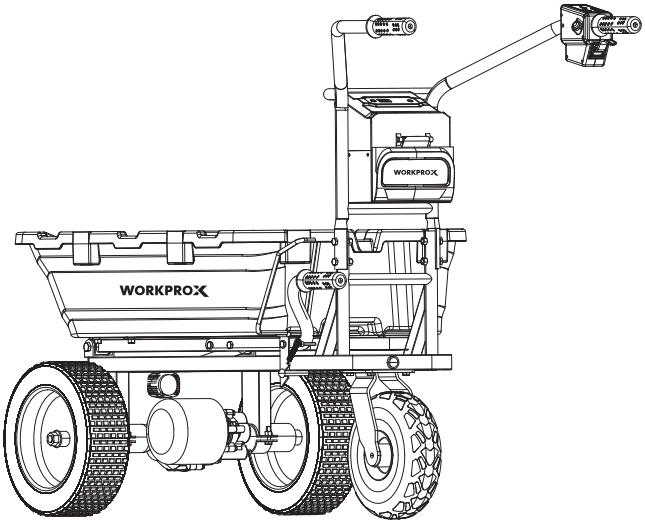


Model#: GJ7303

Distributed by
Hangzhou GreatStar Industrial Co., Ltd.
No.35 Jiuhuan Road, Shangcheng District
Hangzhou 310019, China
www.greatstartools.com
Made in China

## DESCRIPTION OF SYMBOLS

The rating plate on your tool may show symbols. These represent important information about the product or instructions on its use.

**DANGER!**

- Read the operating instructions to reduce the risk of inquiry.

Do not change the direction on steep slopes.

Load and unload objects on flat ground.

Load objects on the carrier or bucket evenly.

This machine cannot be used on the public road.

Do not use for transporting persons.

Do not expose to rain.

Do not look directly at the light.

Do not dump items on slopes. After dumping, lock the dumping device.

Risk of pinning and crushing. Keep your hands at a safe distance during operation. Do not place your hands or body parts into the transport components.

Do not use a high-pressure washer to clean the machine.

Keep bystanders away from the machine during operation.

Do not operate the machine around uneven surfaces.

Do not operate the machine until the bucket is fully retracted.

Remove the ropes before dumping the cargo.

Pressure: 33 psi for front tires and 33 psi for rear tires.

Wear safety goggles.

Wear ear defenders.

Wear a breathing mask.

Wear protective gloves.

Wear safety shoes.

Wear close-fitting work clothes.

⚠ **DANGER!**

When using the equipment, a few safety precautions must be observed to avoid injuries and damage. Please read the complete operating instructions and safety regulations with due care. Keep this manual in a safe place, so that the information is available at all times. If you give the equipment to any other person, hand over these operating instructions and safety regulations as well. We cannot accept any liability for damage or accidents which arise due to a failure to follow these instructions and the safety instructions.

## 1. GENERAL POWER TOOL SAFETY WARNING

⚠ **WARNING!**
**Read and understand all instructions.** Failure to follow the warnings and instructions may result in electric shock, fire and/or serious injury.

**Save all warnings and instructions for future reference.**

The term "power tool" in the warnings refers to your mains-operated (corded) power tool or battery-operated (cordless) power tool.

### 1) Work area safety

- **Keep work area clean and well lit.** Cluttered or dark areas invite accidents.
- **Do not operate power tools in explosive atmospheres, such as in the presence of flammable liquids, gases or dust.** Power tools create sparks which may ignite the dust or fumes.
- **Keep children and bystanders away while operating a power tool.** Distractions can cause you to lose control.

### 2) Electrical safety

- **Power tool plugs must match the outlet. Never modify the plug in any way.** Do not use any adapter plugs with earthed (grounded) power tools. Unmodified plugs and matching outlets will reduce risk of electric shock.
- **Avoid body contact with earthed or grounded surfaces, such as pipes, radiators, ranges and refrigerators.** There is an increased risk of electric shock if your body is earthed or grounded.
- **Do not expose power tools to rain or wet conditions.** Water entering a power tool will increase the risk of electric shock.
- **Do not abuse the cord. Never use the cord for carrying, pulling or unplugging the power tool.** Keep cord away from heat, oil, sharp edges or moving parts. Damaged or entangled cords increase the risk of electric shock.
- **When operating a power tool outdoors, use an extension cord suitable for outdoor use.** Use of a cord suitable for outdoor use reduces the risk of electric shock.
- **If operating a power tool in a damp location is unavoidable, use a residual current device (RCD) protected supply.** Use of an RCD reduces the risk of electric shock.

### 3) Personal safety

- **Stay alert, watch what you are doing and use common sense when operating a power tool.** Do not use a power tool while you are tired or under the influence of drugs, alcohol or medication. A moment of inattention while operating power tools may result in serious personal injury.
- **Use personal protective equipment. Always wear eye protection.** Protective equipment such as a dust mask, non-skid safety shoes, hard hat or hearing protection used for appropriate conditions will reduce personal injuries.
- **Prevent unintentional starting. Ensure the switch is in the off-position before connecting to power source and/or battery pack, picking up or carrying the tool.** Carrying power tools with your finger on the switch or energising power tools that have the switch on invites accidents.
- **Remove any adjusting key or wrench before turning the power tool on.** A wrench or a key left attached to a rotating part of the power tool may result in personal injury.
- **Do not overreach.** Keep proper footing and balance at all times. This enables better control of the power tool in unexpected situations.
- **Dress properly.** Do not wear loose clothing or jewellery. Keep your hair and clothing away from moving parts. Loose clothes, jewellery or long hair can be caught in moving parts.
- **If devices are provided for the connection of dust extraction and collection facilities, ensure these are connected and properly used.** Use of dust collection can reduce dust-related hazards.
- **Do not let familiarity gained from frequent use of tools allow you to become complacent and ignore tool safety principles.** A careless action can cause severe injury within a fraction of a second.

### 4) Power tool use and care

- **Do not force the power tool.** Use the correct power tool for your application. The correct power tool will do the job better and safer at the rate for which it was designed.
- **Do not use the power tool if the switch does not turn it on and off.** Any power tool that cannot be controlled with the switch is dangerous and must be repaired.
- **Disconnect the plug from the power source and/or remove the battery pack, if detachable, from the power tool before making any adjustments, changing accessories, or storing power tools.** Such preventive safety measures reduce the risk of starting the power tool accidentally.
- **Store idle power tools out of the reach of children and do not allow persons unfamiliar with the power tool or these instructions to operate the power tool.** Power tools are dangerous in the hands of untrained users.
- **Maintain power tools and accessories. Check for misalignment or binding of moving parts, breakage of parts and any other condition that**

**may affect the power tool's operation.** If damaged, have the power tool repaired before use. Many accidents are caused by poorly maintained power tools.

- **Keep cutting tools sharp and clean.** Properly maintained cutting tools with sharp cutting edges are less likely to bind and are easier to control.
- **Use the power tool, accessories and tool bits etc.** in accordance with these instructions, taking into account the working conditions and the work to be performed. Use of the power tool for operations different from those intended could result in a hazardous situation.
- **Keep handles and grasping surfaces dry, clean and free from oil and grease.** Slippery handles and grasping surfaces do not allow for safe handling and control of the tool in unexpected situations.

**5) Service**

Have your power tool serviced by a qualified repair person using only identical replacement parts. This will ensure that the safety of the power tool is maintained.

**6) Battery tool use and care**

**a.** Ensure the switch is in the off position before inserting battery pack. Inserting the battery pack into power tools that have the switch on invites accidents.

**b.** Use power tools only with specifically designated battery packs. Use of any other battery packs may create a risk of injury and fire.

**c.** When battery pack is not in use, keep it away from other metal objects like paper clips, coins, keys, nails, screws, or other small metal objects that can make a connection from one terminal to another.

Shorting the battery terminals together may cause burns or a fire.

**d.**Under abusive conditions, liquid may be ejected from the battery; avoid contact. If contact accidentally occurs, flush with water. If liquid contacts eyes, additionally seek medical help. Liquid ejected from the battery may cause irritation or burns.

**ADDITIONAL SAFETY INSTRUCTIONS RELATED TO THE BATTERY PACK AND BATTERY SAFETY**

Use only the WORKPROX batteries supplied with the WORKPROX Tool or WORKPROX-approved replacements.

Do not use the battery to power any device other than the WORKPROX tool it was sold with.

Do not charge the battery in a place where static electricity is generated nor let the battery touch something that is statically charged.

The battery can be stored at temperatures between 40°F(4°C) and 104°F(40°C).

Never store or leave your lithium ion battery in temperatures over that recommended otherwise fire may occur.

DO NOT store the Lithium Ion battery anywhere that the temperature can easily reach higher temperatures than recommended -this includes garden type sheds, and vehicles where the inside temperature can climb to dangerous levels in the direct sunlight and on high temperature days. **THINK BEFORE LEAVING YOUR LITHIUM ION BATTERY PACK IN STORAGE.**

The battery can be charged or operated at temperatures between 40°F(4°C) and 104°F(40°C). **NEVER CHARGE YOU LITHIUM ION BATTERY BELOW OR ABOVE TEMPERATURES RECOMMENDED OTHERWISE FIRE OR SERIOUS DAMAGE TO THE BATTERY PACK MAY OCCUR.**

The most suitable temperatures to charge the battery pack are between 68°F(20°C) -77°F(25°C).

Always allow the battery pack to cool down after charging, do not place it in a hot environment such as a metal shed or open trailer left in the sun.

Take care where the tool is stored. Do not store in areas of corrosive fumes, or salt air or similar conditions. Try and store the tool in the packaging supplied with the tool.

Do not dispose of the battery in a fire or put the battery into a microwave oven, conventional oven, dryer, or high-pressure container. Under these conditions, the battery may explode.

Never attempt to open the battery pack, puncture the battery or subject the battery to strong physical shock.

If the plastic housing of the battery pack breaks open or cracks, immediately discontinue its use and do not recharge it. Ensure the battery pack clip is in good condition and will not allow the pack to fall free from the tool. If the clip is damaged or for any reason is not locking the pack in place, Do Not continue to use.

Stop using the battery if it exhibits abnormal heat, odour, colour, deformation, or is in an abnormal condition.

If you detect leakage or a foul odour, it is especially important to keep the battery away from fire. If battery liquid leaks onto your skin or clothes, wash well with clean water immediately. If liquid leaking from the battery gets into your eyes, do not rub your eyes. Rinse your eyes well (for at least 10 minutes) with clean water, and consult a doctor immediately.

Do not use a leaking battery.

Handle batteries with care to avoid shorting the battery with conducting materials, such as nails, screws, metal watch bands, rings, bracelets, and keys. The battery may overheat and could burn you.

After the battery has reached the end of its useful life, we recommend recycling the materials at your local municipal council recycling centre. DO NOT attempt to replace the battery cells in the battery pack, repair or modify any part of the battery pack assembly.

When recycling, make it nonconductive by applying insulating tape to the terminals located on the battery.

**WHEN TO CHARGE THE BATTERY**

New batteries are shipped in a low charged condition and should be fully charged before Use. The battery pack can be recharged at any time during use, provided the pack is not overheated.

If the battery pack starts to cut out due to low voltage, or previous tasks undertaken can no longer be performed, it is suggested to stop using the tool and recharge the battery.

**For storage, it is suggested to recharge the battery between 50% and 75% charge.Charge the device at least once in 3-6 months to preserve battery life span.**

**7) Brushless Electric Powered Wheelbarrow safety warnings**

- Always wear slip-resistant protective footwear during machine operation. Anti-slip and toe-closure safety boots/shoes can reduce the risk of injury.
- Check the path before loading items or materials. Familiarize yourself with the path and ensure it is wide enough for the machine to pass safely under load. This helps reduce the risk of the machine losing control.
- Exercise extreme caution on slippery, loose, and unstable terrain. Slippery surfaces (e.g., wet grass, snow, and ice) as well as loose and uneven ground (e.g., sand or gravel) may cause the machine to lose traction and adversely affect steering, control, and stability.
- Do not operate the machine on steep slopes. This reduces the risk of the machine losing control, slipping, or falling. If the slope exceeds the recommended maximum gradient, it increases the risk of unstable driving and adversely affects safe parking capability.
- When working on slopes, ensure a stable stance and stand across the slope surface. Avoid jolting up and down, and exercise extreme caution when changing direction. This reduces the risk of machine loss of control, slipping, and falling.
- When parking, loading, and unloading, park the vehicle on a flat area whenever possible. Never leave the machine on a slope without supervision. Compared to flat surfaces, parking the machine on a slope is more unstable.
- When leaving the machine, park it in a safe area and engage the parking brake. The parking brake prevents the front wheels from moving unexpectedly and enhances stability.
- Ensure ramps are barrier-free, solid, and safe. To minimize the risk of damage or injury, all loose rocks on the ramps must be cleared, and the pavement must be sufficiently sturdy to withstand the anticipated load from vehicles. The subgrade and both sides of the road surface must be robust enough to prevent machinery from tilting or swaying under heavy loads. The width of the ramps must provide adequate space for workers to stand and maintain balance when transporting heavy items.
- Before use, ensure all locking screws are securely tightened. The locking screws on the rear wheel and the front and side panels of the open bracket must be firmly secured to prevent accidental movement of these adjustable components on the machine.
- Do not operate the machine under overload conditions. Ensure the machine is loaded with the appropriate load of items or materials to be transported. Overloading may result in difficulty in operating and stopping the machine, increased braking time and distance, and heightened risks of instability.
- Do not operate the machine when materials are stacked too high. If the stack exceeds the hopper depth or extends beyond the hopper sides, the machine may lose balance and control, becoming unmanageable.
- Secure the load using containers and fastening devices. Loose and/or unfastened loads may shift, resulting in loss of stability and control.
- Always keep the handle firmly in your grip. Loss of control increases the risk of personal injury.
- Remove both battery packs when not in use. Removing the battery packs prevents accidental power supply, such as in the event of operation by children or untrained/unauthorized personnel. Without the battery packs, there is no power.
- This machine is not intended for use on public roads. Using a handcart on public roads is illegal and may result in personal injury or local judicial penalties.
- When loading or unloading the machine for transportation or moving it across different levels, use a sturdy board with anti-slip and anti-dislodging features. Ensure the board's tilt angle does not exceed 12° and handle the machine slowly and carefully. If the operation is too fast or unstable, it may cause the machine to tip over or overturn.
- Do not disassemble, repair, or modify this device.

**PREPARE**

- Before operating the machine, make sure there is no one around the machine.
- Perform the inspection as specified in the maintenance section before operating the machine.

**OPERATE**

- When operating the machine, stand behind the machine and firmly hold the handle with both hands.
- Never ride on the machine to operate it.
- Never allow others to ride on the machine.
- When operating the machine to move backward or backward, keep your eyes on the rear and watch your step to avoid slipping or tripping.
- Do not use the machine when visibility is poor, otherwise you may hit an obstacle.
- Slow down and be careful when operating the machine on uneven road or crossing the difference of road elevation.
- Avoid driving on soft ground to prevent shoulder collapse and rollover.
- Do not operate the machine on slopes steeper than 15°.
- If an abnormality is detected, park the machine on a flat surface. Before inspecting the machine, lock the brake handle and then turn off the power.
- Before operating the machine, ensure the handle of the tipping device is fully pulled down to the bottom and securely locked. If not fully locked, the chute or tipping bucket may tilt during downhill movement, causing the load to fall and posing a risk of accidents or personal injury.
- When operating the machine near the wall, be careful to avoid your hand getting caught between the handle and the wall.
- Do not use the machine in bad weather, especially when there is a possibility of lightning. This can reduce the risk of being struck by lightning.

- Do not touch metal parts during or after use, as they may become hot due to sunlight exposure and cause burns.
- Be careful not to let the cable wrap around the items or obstacles it carries.
- When crossing the wooden bridge, ensure that the total weight of the product, load capacity, and operator does not exceed the bridge's weight limit, and cross the bridge carefully at a constant speed.
- Wear gloves when operating the machine in low-temperature environments. Touching metal parts with bare hands may cause your hands to stick.
- If there are people or obstacles in the direction of movement, avoid them in advance.
- Do not scoop items directly with a tray or bucket. This may damage the machine and cause accidents.
- When using the machine on muddy ground, wet slopes or slippery surfaces, be sure to stand firmly.
- Do not immerse the machine in water.
- If you leave the machine while working, make sure the tipping device is fully retracted to its original position, then lock the brake handle and remove the lock key.
- Do not leave the machine unattended when the trolley or hopper is loaded.

## OPERATIONS ON A SLOPE

- Do not cross the slope.
- Stop before going downhill and slow down carefully
  - If the speed is too high while going downhill, a buzzer will sound. In this case, use the brakes to slow down.
- Be careful when starting and stopping the machine on the slope.
- As the stability of items on the slope will be reduced, use ropes to securely fasten the items.
- The machine's stability depends on its load. Reduce the load to the minimum. The machine's stability depends on its load. Reduce the load to the minimum.
- Due to blocked visibility on the slope, minimize the stacking height of the items carried.
- Do not park the machine on a slope. Park it on a flat surface, lock the brake handle, and then turn off the power. Do not park the machine on a slope. Park it on a flat surface, lock the brake handle, and then turn off the power.
- Do not change direction or speed pattern on a steep slope.
- Never release the trigger while climbing uphill. The machine may reverse, causing accidents.
- Ensure your battery has enough power before working on the slope. If the battery is low, charge it or replace it with a fully charged one.
- When starting the machine on a slope, do not place your foot behind the rear wheel, as the machine will move back a few centimeters.

## LOADING ITEMS

- Do not overload. When loading items, strictly follow the instructions in the manual and do not exceed the load limit.
- The higher the load capacity, the more difficult it is to operate the machine. Therefore, the load capacity should be maintained within a range that does not affect operation.
- Secure the load with ropes.
- Place items into the pallet or dump. If the loaded items protrude beyond the pallet or dump, there is a risk of accidents due to falling items or contact with obstacles such as walls.
- Ensure the items do not exceed the line of sight height. Stacking items too high obstructs visibility, posing serious risks. There is also a risk of rollovers and personal injury as the stacked items may lose balance.
- Load items evenly into the pallet or dump truck. If the items are not evenly loaded, there is a risk of overturning and injury due to unbalanced cargo.
- Before loading items or operating the machine, ensure the handle of the tipping device is fully pulled down to the bottom and fully locked.
- Make sure to load heavier items first to maintain balance.
- Never extend the front or side rails on steep slopes. The side rail may be extended when carrying lighter loads.
- When extending the front and side rails, do not exceed the extension limits. When extending the side rail, ensure both sides are at the same height and evenly loaded.
- Load or unload items on a flat surface. Do not load or unload items on a slope.
- When lifting and tilting the support or dump, hold the handle firmly in a stable position.

## MACHINE TRANSPORTATION

- Use ladder rails with a height at least four times the length of the truck bed, equipped with fixed devices suitable for the bed, featuring anti-slip surfaces and sufficient width to support the weight of machinery and operators. Please read the user manual of the ladder rails carefully before use.
- Before loading the machine, unload all items from the machine and remove dirt and debris from the tires. Install the ladder rail on a level surface.
- Before loading or unloading the machine, ensure no one is around the machine or the ladder rail. Load or unload the machine slowly, taking precautions to prevent the machine from falling off the ladder rail and avoiding head contact with the truck's ceiling. Extra caution is required when loading or unloading the machine in reverse.
- When transporting the machine, lock the brake handle, turn off the power, remove the battery and lock the key, and secure the machine firmly.

# 2. LAYOUT AND UNPACKING

## 2.1 Layout (Fig.1)

**Fig. 1**

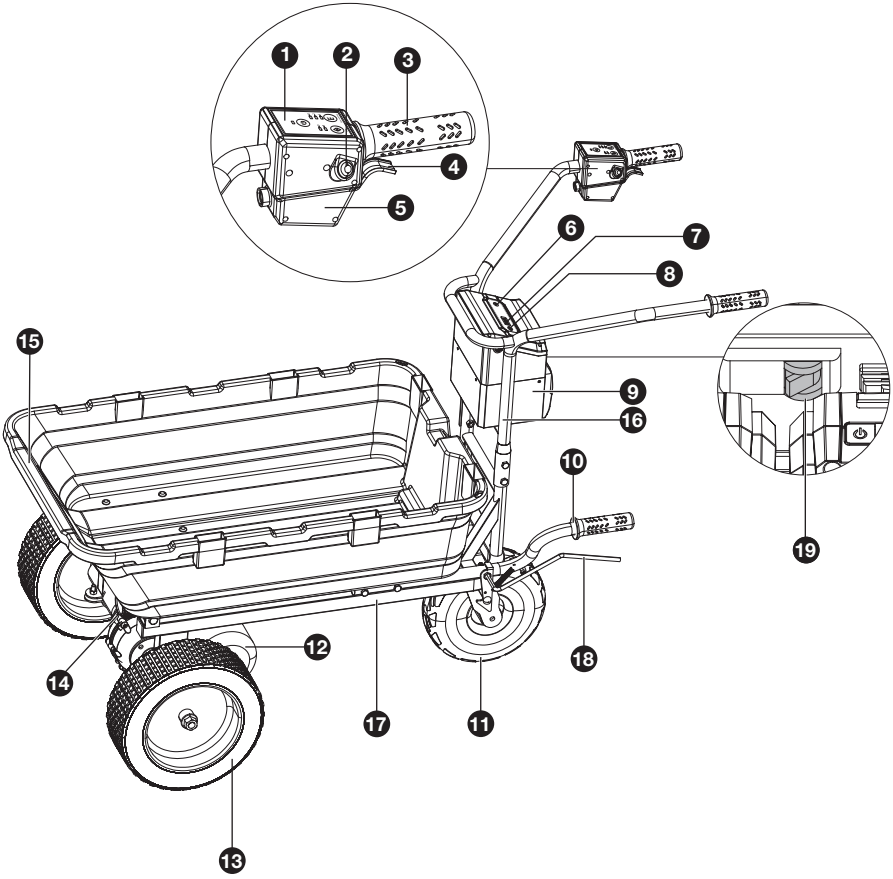


1. Control Panel
2. Horn Button
3. Handlebar
4. Drive/Reverse Switch
5. Control Box
6. Headlight Switch
7. Battery Level Indicator (LED)
8. Battery Level Display Button
9. Battery Compartment
10. Dump Handle
11. Caster wheel
12. Gear Motor
13. Drive Wheel
14. Headlight
15. Bucket
16. Handle Assembly
17. Main Frame
18. Release Lever
19. Main Power Switch/Over Current Protection Switch

### 2.2 Items supplied

**NOTE:** Please check that the article is complete as specified in the scope of delivery. If parts are missing, please contact our online service center.

- Open the packaging and take out the equipment with care.
- Remove the packaging material and any packaging and/or transportation braces (if available).
- Check to see if all items are supplied.
- Inspect the equipment and accessories for transport damage.
- If possible, please keep the packaging until the end of the guarantee period.

**⚠ DANGER!**

**The equipment and packaging material are not toys. Do not let children play with plastic bags, foils or small parts. There is a danger of swallowing or suffocating!**

## 3. PROPER USE

- This appliance is a brushless electric powered wheelbarrow for transporting loose materials such as soil, sand, gravel, bricks, mulch, and garden tools in private gardens, yards, construction sites, and farms, within the maximum load capacity.

## 4. TECHNICAL DATA

| | | | |
|---|---|---|---|
| Gear Motor Type | | | Brushless Gear Motor |
| Rated Gear Motor Power | | | 300 W |
| Gear Motor Speed | | | 1600RPM |
| Optimal Operating Load Capacity | | | 100 kg |
| Maximum Load Capacity | | | 200 kg |
| Maximum Climbing Ability | | | 15° |
| Bucket Capacity | | | 75L |
| Light Brightness | | | 400 lm |
| Horn Sound Level | | | 80 dB |
| Speed (No Load): | | | Drive:<br>Gear 1/2/3 = 1.5 / 3.0 / 4.5 km/h<br>Reverse: 1.5 km/h |
| Machine Weight | | | 80.5 lb(36.5 kg) |
| Battery | Model No. | | GS-ET24075 |
| | Capacity | | 4000mAh |
| | Voltage | | Maximum 20V, Nominal 18V |
| | USB-C | Input/ Output | Max. 45W, 5V/3A, 9V/3A, 12V/3A, 15V/3A, 20V/2.25A |
| | USB-A | Output | Max. 15W, 5V/3A |

## 5. ASSEMBLY

**⚠ WARNING!**

Do not insert the battery until assembly is complete. Failure to comply could result in accidental starting and serious personal injury.

**⚠ WARNING!**

The product must be fully assembled before operation. Do not use a product that is only partially assembled or assembled with damaged parts.

### 5.1 Installing the Caster Wheel (Fig.2-3)

- Place the caster wheel (11) onto the main frame (17).
- Align the mounting holes.
- Secure the wheel using four M8 hex bolts.
- Tighten all bolts securely with a wrench.

**Fig. 2**

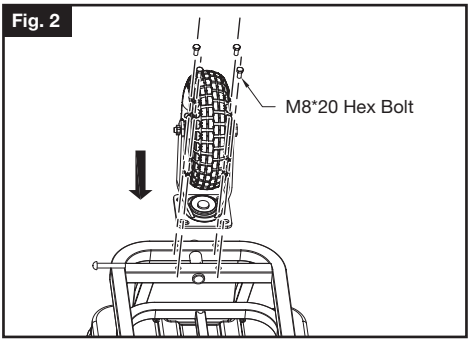


**Fig. 3**

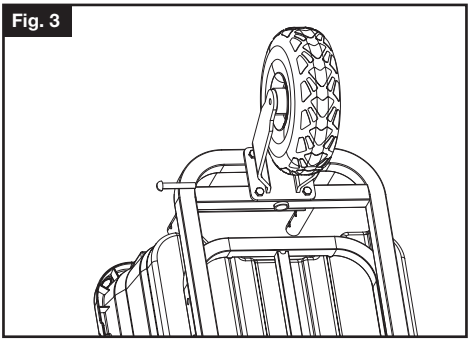

### 5.2 Installing the Drive Wheel (Fig.4-5)

- Install the two drive wheels (13) onto both sides of the drive shaft.
- Align the keyway of each wheel with the keyway on the shaft.
- Insert the parallel key fully into the aligned keyway.
- Secure the wheels with the M14 lock nuts.
- Tighten all lock nuts securely with a wrench.

Fig. 4

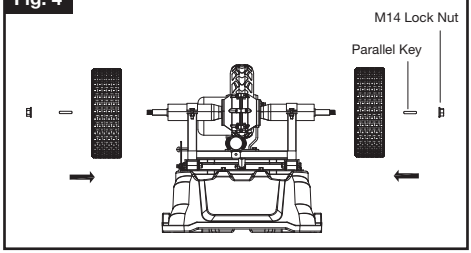


Fig. 5

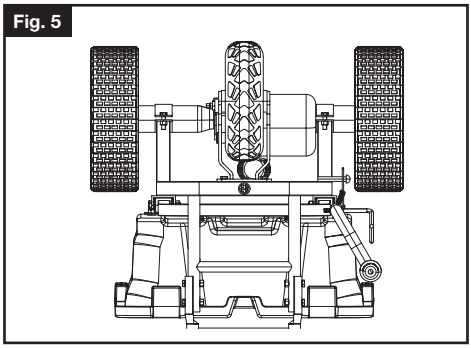

**5.3 Installing the Dump Handle (Fig.6)**

- Install the dump handle (10) onto the main frame (17).
- Align the holes of the handle with the holes on the brackets.
- Secure the handle using the M8 hex bolts.
- Tighten all bolts securely with a wrench.
- Check that the handle moves smoothly and is securely attached.

Fig. 6

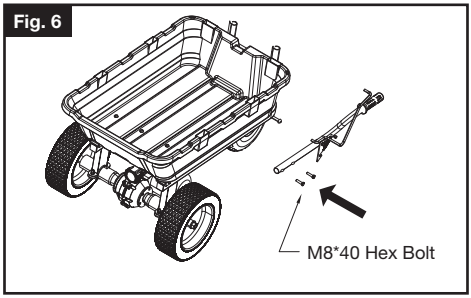


**5.4 Install the Handle Assembly (Fig. 7)**

- Align the ends of the handle assembly (16) with the corresponding holes on the main frame (17).
- Insert the M8 hex bolts into the aligned holes.
- Fasten the hex bolts using M8 lock nuts.
- Tighten all lock nuts securely with a wrench.
- Check that the bracket is securely installed and operates properly.

Fig. 7

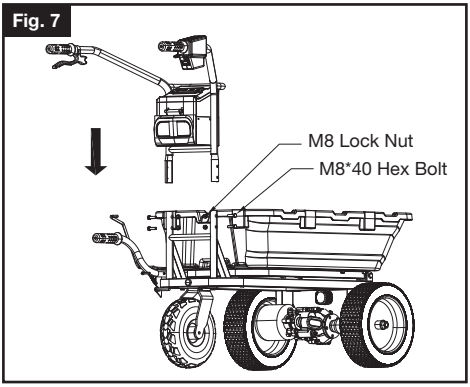


**5.5 Inserting/Removing the battery pack (Fig.8-10)**

- To install the battery, open the battery compartment cover, slide the battery pack into the body of the tool, and ensure it clicks and locks securely into place.
- To remove the battery, push in the release buttons and pull the battery pack away from the tool.
- Close the battery compartment cover.

**NOTE:** Be careful not to pinch your fingers when opening or closing the battery compartment cover.

Fig. 8

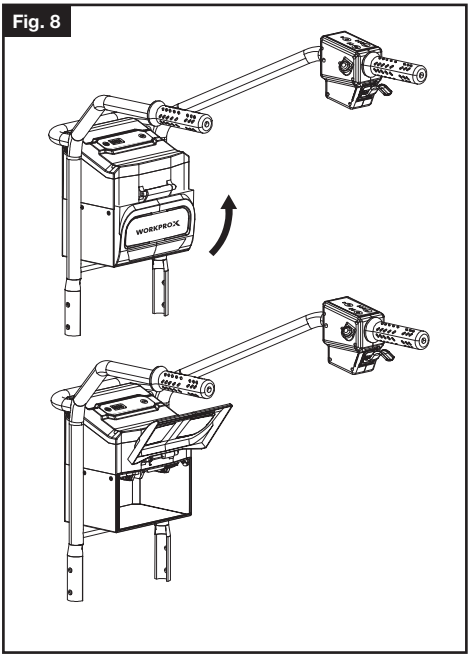

Fig. 9

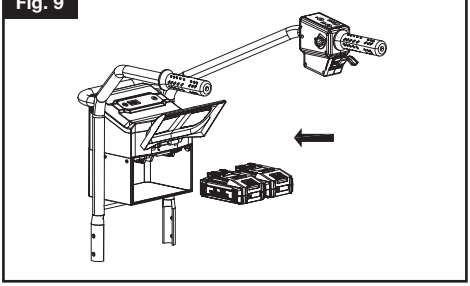

Fig. 10

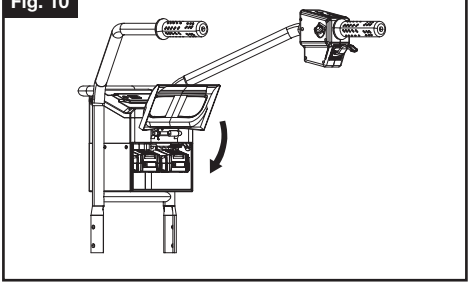

**⚠ WARNING!**

Hold the tool and the battery pack firmly when installing or removing the battery pack. Failure to hold the tool and the battery pack firmly may cause them to slip off your hands and result in damage to the tool and battery pack and personal injury.

**⚠ WARNING!**

When installing the battery packs, make sure your hand is not on the switch to prevent accidental starting.

**⚠ WARNING!**

This machine will only operate when two batteries are installed. You must use the two identical WORKPROX battery packs provided, or other WORKPROX 20V series battery packs you already own, and charge them at the same time. If two battery packs with different amp-hour capacities are used, the machine will operate according to the lower-capacity battery.

### 5.6 Battery Compartment Button & LED Indicator

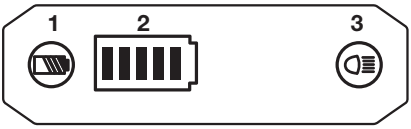


1. Battery Level Display Button

Function: Checks the current battery charge level.

Operation:

■ Press the battery level button on the battery compartment cover.

2. Battery Level Indicator (LED)

Function: Displays the battery charge level.

Operation:

■ Press the battery level display button on the battery compartment cover to check the remaining battery level.

Battery Level Display (Green LEDs):

5 LEDs lit: 81-100%

4 LEDs lit: 61-80%

3 LEDs lit: 41-60%

2 LEDs lit: 21-40%

1 LED lit: 0-20%

**NOTE:** Always check the battery level before use to ensure sufficient power.

3. Headlight Switch

Function: Turns the vehicle lights on or off.

Operation:

■ Press the switch once to turn on the lights.

■ Press again to turn off the lights.

### 5.7 Control panel

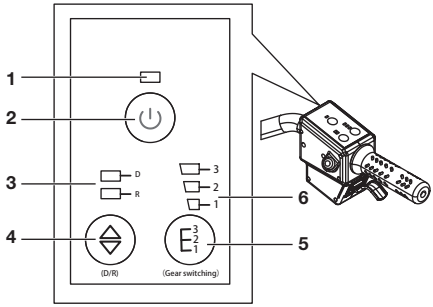


1. Main Power Indicator:
   Shows whether the device is on (green) or off.
2. Power Button:
   Press and hold 3–4 seconds to turn the device on or off.
3. Drive/Reverse Indicator:
   Lights green to show the current direction.
4. Drive/Reverse Button:
   Press the Drive/Reverse Button to switch direction.
5. Speed Control Button:
   Switches between Low (1st), Medium (2nd), and High (3rd) speeds. Disabled in Reverse.
6. Speed Indicator:
   Shows the current speed setting.

# 6. BATTERY PACK

### 6.1 Battery capacity indicator (Fig.11)

The battery pack has an LED screen, and press the ⏻ can display real-time power level. The screen will automatically turn off in three seconds.

Fig. 11

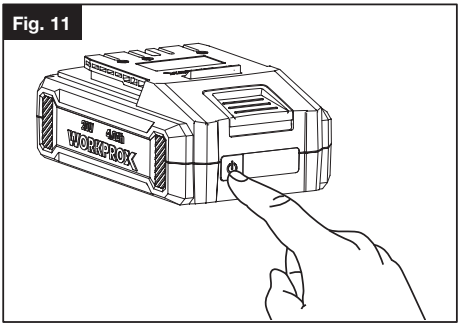


### 6.2 Recharge the battery pack (Fig.12)

To charge your battery pack, connect one end of the USB cable with a USB-C port to the corresponding USB-C port on the battery pack, and connect the other end to a USB-C or USB-A interface charger.

Fig. 12

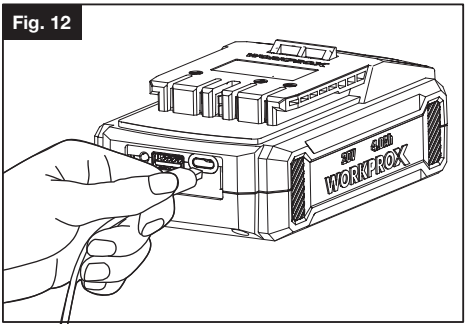


### 6.3 Charge portable device (Fig.13-14)

- Press the button as shown in, the indicator will light up green to indicate that the battery pack is active and that the USB ports are ready to be used. (See Fig.13)
- Plug the USB cable into the correct port, and the other end of the cable into your device to begin charging the device. (See Fig.14)
- After charging, disconnect the USB cables, press the button to turn the indicator off.

**NOTE:** The green light remains on during output.After pressing the button, if no USB cable is connected for an extended period, the green light will automatically turn off after 5 minutes.

Fig.13

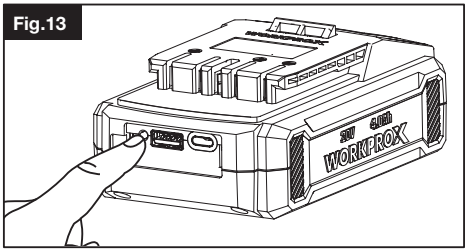


Fig. 14

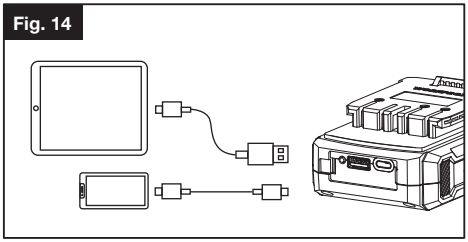

# 7. OPERATION

**⚠ WARNING!**

Before performing any assembly or maintenance on the machine, make sure the power is turned off and the battery pack is removed.

**NOTES:**

- Never remove the battery while the machine is running.
- For extended periods of inactivity, press the shut-down button.
- Only use the electric gear motor when the battery has sufficient charge.

### 7.1 Main Power Switch (Fig.15)

Controls the machine's main power supply. Turn it on before operation and switch it off after use.

Fig. 15

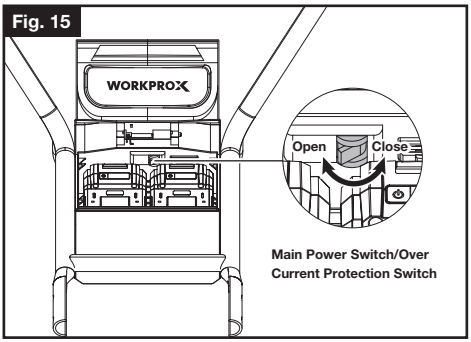

### 7.2 Power On / Off (Fig. 16)

- Press and hold the Power Button for 3–4 seconds to turn on the device. The main power indicator will light up green.
- To turn off the device, press and hold the Power Button again for 3–4 seconds until the indicator turns off.

**NOTE:** The device will automatically turn off after 30 minutes of inactivity.

Fig. 16

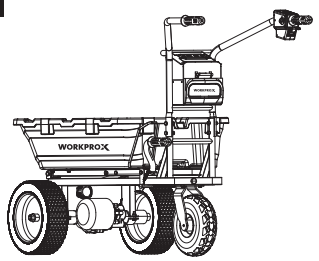


### 7.3 Drive / Reverse Operating Steps (Fig. 17-18)

**NOTE:** Ensure the battery is sufficiently charged before operation.

**Drive Operation (Fig. 17)**

1. Grip the Handlebar
- Hold the handlebar firmly with both hands.

2. Select Drive Gear
- Press the drive/reverse switch button to select drive.
- Speed Levels: The vehicle has 3 drive speed levels. Choose the appropriate speed according to terrain and load:

Level 1: Low speed – suitable for tight spaces or heavy loads.

Level 2: Medium speed – suitable for normal operation.

Level 3: High speed – suitable for open areas on flat terrain.

3. Start Moving Drive
- Gradually increase the throttle until the vehicle starts moving.

4. Stop
- Release the drive control to slow down and stop.

**NOTES:**

- Always start at a lower speed when carrying heavy loads or driving on slopes.
- When powered on, the vehicle defaults to drive mode and low speed.
- Avoid changing speed levels abruptly while the vehicle is in motion.
- Do not exceed the maximum recommended speed.
- The drive/reverse direction cannot be switched while the vehicle is in motion. Release the drive/reverse switch before changing direction. During reverse operation, the speed is limited to a fixed low level and cannot be adjusted.
- Keep both hands on the handlebar at all times during operation.

Fig. 17

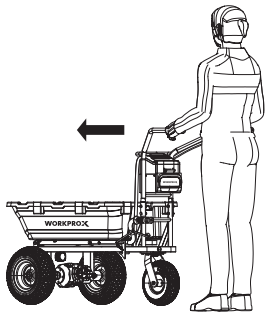


**Reverse Operation (Fig. 18)**

1. Grip the Handlebar
- Hold the handlebar firmly with both hands.

2. Select Reverse Gear
- Press the drive/reverse switch button to select reverse.
- Speed Level: The vehicle has 1 reverse speed – suitable for precise maneuvers and safe operation in tight spaces.

3. Start Moving Backward

Gradually increase the throttle until the vehicle starts moving backward.

4. Stop
- Release the reverse control to slow down and stop.

**NOTES:**

- Avoid changing direction abruptly while the vehicle is in motion.
- Always keep both hands on the handlebar during operation.
- Always start at a lower speed when carrying heavy loads or driving on slopes.
- Do not exceed the maximum recommended speed.
- Always ensure the vehicle has fully stopped before switching between drive and reverse.

Fig. 18

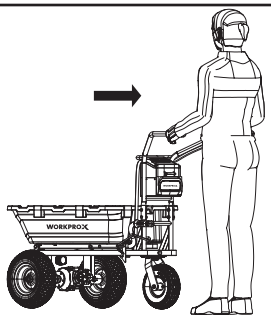

### 7.4 Climbing Operation (Fig.19)

**NOTE:** Ensure the battery is sufficiently charged before operation. Check that the path is clear and free of obstacles.

1. Grip the Handlebar

- Hold the handlebar firmly with both hands throughout the climb.

2. Select Drive Gear

- Press the drive/reverse switch button to select drive.
- Speed Levels: For climbing, it is recommended to use Level 1 (low speed) to maintain control and prevent slipping. Higher speeds are not recommended on inclines.

3. Start Climbing

- Gradually increase the throttle until the vehicle begins moving uphill.
- Maintain a steady speed and avoid sudden acceleration or braking.

4. Parking on a Slope

⚠ **WARNING:** The vehicle may roll downhill when stopped on a slope, as it is not equipped with an automatic hill-hold function.

- Release the drive control lever to slow down the machine.
- Always hold the handlebar firmly and maintain full control of the machine. Never let go of the handlebar.
- Avoid stopping on a slope whenever possible.
- If stopping is unavoidable, move the machine to a flat and stable surface as soon as it is safe to do so.

**PRECAUTIONS:**

- Always travel straight when going uphill. Avoid sharp turns on slopes.
- Do not exceed the maximum recommended load when operating on an incline.
- Always keep both hands on the handlebar.
- Operate at low speed to maintain stability and prevent battery overload.
- Ensure the slope is within the machine's rated climbing capability. Refer to the technical specifications for details.

Fig. 19

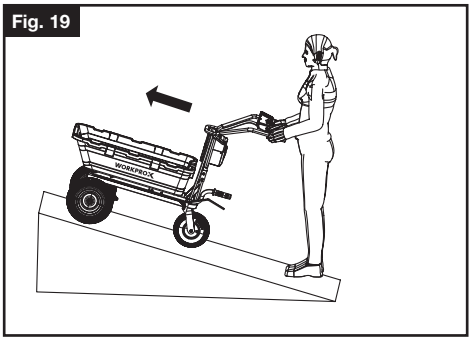


### 7.5 Operating the Release Lever (Fig. 20)

The release lever (18) on the dump handle controls the locking and unlocking of the bucket.

To Unlock the Bucket:

- Pull the release lever (18) toward yourself.

To Tilt the Bucket:

- Hold the dump handle (10) and lift or tilt the bucket as needed.

To Lock the Bucket:

- First, release the release lever (18), then press the dump handle (10) to engage the locking mechanism.

**WARNING:**

- Before moving the machine, always ensure that the bucket is securely locked.
- Keep hands and fingers away from pinch points when operating the release lever.

Fig. 20

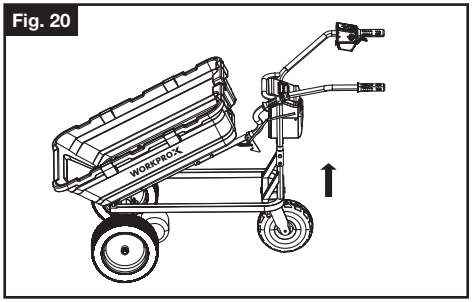


### 7.6 Overload Protection (Fig. 15)

When the machine is operated under conditions that cause abnormally high current (such as excessive load or steep inclines), the overload protection system will be activated. The machine will automatically stop, and the main power indicator will flash green.

If this occurs, turn off the machine immediately and remove the cause of the overload, such as reducing the load or operating under less demanding conditions. Then turn the machine on again to resume operation.

**NOTE:** Frequent activation of overload protection may indicate that the machine is being operated beyond its intended capacity.

## 8. TROUBLESHOOTING

| Problem / Fault | Possible Cause | Solution / Action |
|---|---|---|
| Machine will not run | Battery is discharged | Recharge the battery pack |
| Gear motor overheats | Vent may be blocked by dust | Clean vent. Do not cover vent with hands during operation |

# 9. CLEANING & MAINTENANCE

> ⚠ **WARNING!**
> Before inspecting, cleaning, or performing any other maintenance, always switch off the Electric Powered Wheelbarrow, remove the battery.

**9.1 Cleaning**

- Wear protective gloves when cleaning or performing maintenance.
- Use a damp cloth or soft brush to wipe the exterior, wheels, and frame. Avoid spraying water directly on the gear motor, control box, battery compartment, or air spring components.
- Keep water away from bearings, gears, and other critical mechanical parts.
- Do not use strong acids, alkalis, or solvents for cleaning.
- After cleaning, ensure the machine is completely dry before reinstalling the battery and powering on.

**9.2 Maintenance**

- Always perform a visual inspection before and after use.
- Check for loose bolts, damaged or worn parts, and any unusual noises.
- Ensure all mechanical components are in proper working condition.
- The tipping mechanism contains an air spring rod device. Do not modify the device, as this may cause malfunction or accidents.

# 10. STORAGE

- Store the machine indoors in a dry, shaded location, avoiding direct sunlight, rain, high temperatures, or damp conditions.
- Park the machine on a flat surface to prevent rolling or slipping.
- Turn off the power and remove the battery pack.
- Do not leave the machine unattended outdoors.
- Ensure all mechanical components are in neutral or safe positions before storage.

# 11. DISPOSAL AND RECYCLING

## ENVIRONMENTAL PROTECTION

This product has been marked with a symbol relating to removing electric and electronic waste. This means that this product shall not be discarded with household waste but that it shall be returned to a collection system.
It will then be recycled or dismantled in order to reduce the impact on the environment. Electric and electronic equipment can be hazardous for the environment and for human health since they contain hazardous substances.

## DISPOSAL OF AN EXHAUSTED BATTERY PACK

To preserve natural resources, please recycle or dispose of the battery pack properly. This battery pack contains Li-ion batteries. Consult your local waste authority for information regarding available recycling and/or disposal options. Discharge your battery pack by operating your tool, then remove the battery pack from the tool housing and cover the battery pack connections with heavy-duty adhesive tape to prevent short circuit and energy discharge. Do not attempt to open or remove any of the components.

The unit is supplied in packaging to prevent its being damaged in transit. This packaging is raw material and can therefore be reused or can be returned to the raw material system.

**Manufacturer:**
**JINHUA GAOJIU ELECTRIC EQUIPMENT CO.LTD.**
**Add: No.12 Baijiale Road, Xialixi Industry Area,Shizhu Town,Yongkang City,Zhejiang,China. 321300**

WORKPROX