PRORUN®

REAR BAGGER KIT

OPERATOR'S MANUAL

MODEL: PGB42

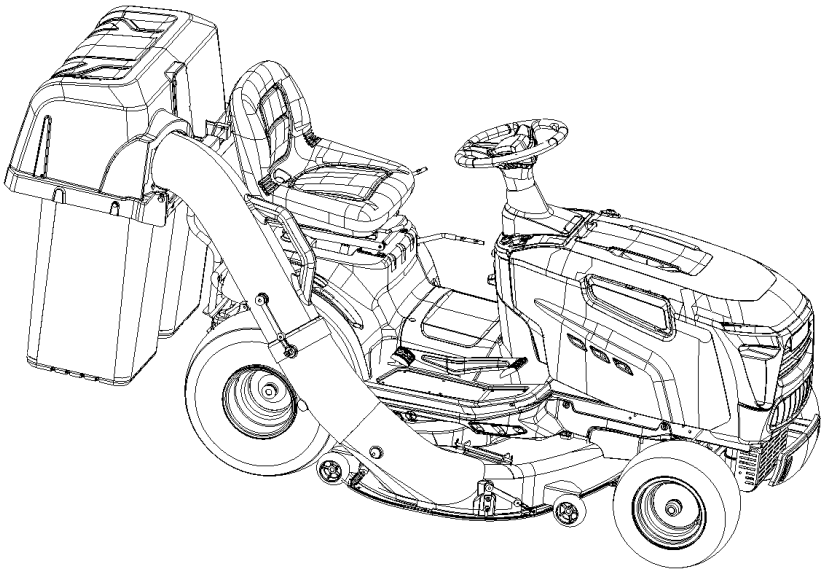

Everything PRORUN

BEFORE USING, READ THE INSTRUCTIONS.

⚠ **IMPORTANT – READ CAREFULLY BEFORE USE.**

⚠ **IMPORTANT SAFETY INSTRUCTIONS – SAVE THESE INSTRUCTIONS.**

WARNING: To reduce the risk of injury, the user must read and understand the user manual before using this product. Keep these instructions for future reference.

Please let us know what you think. To leave a comment and see our complete product line Visit the Website:

PRORUNTOOLS.COM ★★★★★

1-844-905-0882, info@proruntech.com

Version: A – Issue Date: 4/22/2026

10130 Perimeter Parkway, Suite 140 Charlotte, NC 28216

TABLE OF CONTENTS

1. IMPORTANT SAFETY INSTRUCTIONS 3

2. EXPLODED VIEW AND PARTS 8

3. MATERIALS IN BOX 7

4. ASSEMBLY AND INSTALLATION 11

5. OPERATION – USING YOUR GRASS BAGGER 19

6. LIMITED WARRANTY 20

1. IMPORTANT SAFETY INSTRUCTIONS

SAFETY SYMBOLS

REFER TO YOUR MOWER OPERATOR'S MANUAL FOR ANY SAFETY INSTRUCTIONS

SYMBOLS	DESCRIPTION
	⚠ **WARNING!** **Read and understand all instructions before operating the mower.**
	⚠ **WARNING!** **Turn off the engine before opening the bagger cover.**

WARNING DEFINITIONS

⚠ **THIS IS THE SAFETY ALERT SYMBOL.**
It is used to alert you to potential personal injury hazards. Obey all safety messages that follow this symbol to avoid possible injury or death.

⚠ **DANGER!**
Indicates a hazardous situation which, if not avoided, will result in death or serious injury.

⚠ **WARNING!**
Indicates a hazardous situation which, if not avoided, could result in death or serious injury.

⚠ **CAUTION!**
Indicates a hazardous situation which, if not avoided, could result in minor or moderate injury.

⚠ **NOTICE!**
Addresses circumstances not related to personal injury.

SAVE THESE INSTRUCTIONS

∗ This operator's manual contains essential instructions that should be followed during mower setup, operation, and maintenance of the mower. Consult with your mower's operator's manual for complete safety information.

GENERAL SAFETY INSTRUCTIONS

- Read, understand, and follow all instructions and warnings in this manual and in the engine manufacturer's manual before use.
- Allow only responsible, properly trained operators who are familiar with these instructions to operate the product.
- Inform all operators of potential hazards and risks of injury.
- Never carry passengers. Keep bystanders at a safe distance at all times.
- Do not operate the product while under the influence of alcohol, drugs, or medications that impair alertness.
- Follow the manufacturer's recommendations for wheel weights or counterweights.
- Learn the proper operation of the product and all controls before use.
- Be sure to understand how to stop the mower prior to using your grass bagger.
- Become familiar with all safety decals and their meanings.
- Keep the product clean so all warning labels remain clearly visible.
- The operator is responsible for accidents involving people or property.
- Use the product only in daylight or well-lit conditions.
- Maintain a safe distance from holes, drop-offs, and uneven terrain.
- Watch for and avoid potential hazards at all times.
- Do not allow children or unauthorized individuals to operate or service the product. Local regulations may specify minimum age requirements.
- Ensure no one is near the product when starting the engine or engaging the drive system.
- Use extra caution when operating near roads or when crossing them.
- Always stop the engine and park on a level surface before leaving the operator's position.
- Do not modify the product or install non-approved equipment without the manufacturer's authorization.

SAFETY INSTRUCTIONS REGARDING CHILDREN

⚠ **WARNING!**

Children can be seriously injured or killed by this product. Always keep children away.

- Children are often attracted to the product and the mowing activity. Never assume they will remain where you last saw them.
- Keep children out of the work area and under the supervision of a responsible adult who is not the operator.
- Stop operation immediately if children enter the area.
- Use extra caution near corners, shrubs, trees, or other objects that obstruct visibility of a child.
- Before moving forward or backward, look down and behind for small children.
- Never allow children to operate the product.
- Never carry children, even with the blades disengaged.
- Children may unexpectedly enter the mowing area and be struck or run over.

SAFETY INSTRUCTIONS FOR OPERATION

⚠ **WARNING!**

Read all safety instructions before operating the product.

- Ensure the area is clear of people and pets before mowing. Stop immediately if anyone enters the area.
- Never carry passengers.
- Reduce speed before turning and when operating on corners or uneven ground.
- Disengage the blades when not actively mowing.
- Ensure the grass collector cover is fully closed before starting operation.
- Disengage the blades when crossing gravel, paved areas, or other surfaces where objects may be thrown.
- Do not attempt to collect objects that cannot safely enter the grass bagger.
- Wear approved eye protection during operation.
- Empty and clean the grass collection bags after each use and before storage. Grass left in bags can cause spontaneous combustion and fire.

SAFETY INSTRUCTIONS FOR THE GRASS BAGGER

⚠ **WARNING!**

Read all safety instructions before operating the product.

- Do not operate the mower unless the grass collection system is fully installed.
- Stop all moving parts before installing the grass bagger or clearing clogs.
- Clear the area of stones, toys, wires, and debris before mowing.
- Only responsible, properly trained adults should operate the product.

SAFETY INSTRUCTIONS BEFORE INSTALLATION OF THE GRASS BAGGER

⚠ **WARNING!**

Read all safety instructions before installation.

- Park the mower on a flat, level surface.
- Engage the parking brake.
- Place control levers in the neutral position.
- Stop the engine and remove the ignition key.
- Ensure all moving parts have completely stopped.

SAFETY INSTRUCTION FOR OPERATION ON SLOPES

⚠ WARNING!

Slopes increase the risk of loss of control and tip-over accidents.

- Operate only in the directions recommended in your mower operator manual.
- Avoid sudden starts, stops, or sharp turns.
- Reduce speed and make gradual turns.
- If traction is lost, disengage the blades and proceed straight down the slope.
- Use extra caution when attachments are installed, as they affect stability.
- Do not operate on slopes where you feel unsafe.

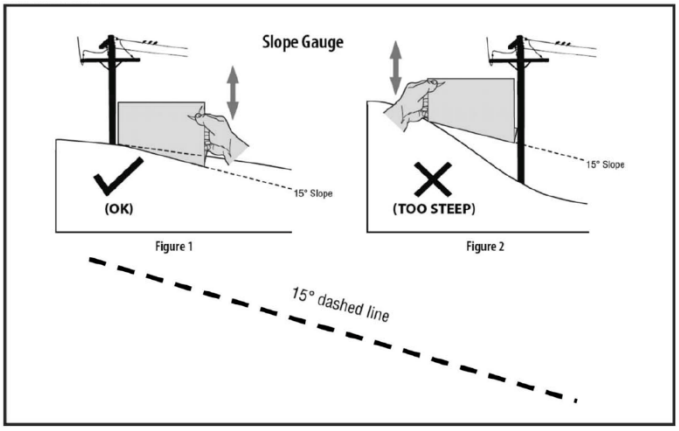

- Remove rocks, branches, and obstacles from slopes before mowing.
- Mow up and down slopes, never across.
- Do not operate on slopes exceeding 15°.
- Avoid mowing wet grass, which reduces traction.
- Watch for holes, ruts, bumps, and uneven terrain.
- Maintain a safe distance from edges, ditches, and embankments.

SAFETY INSTRUCTIONS FOR MAINTENANCE

⚠ WARNING!

Read all safety instructions before performing maintenance.

The product is heavy and can cause injury or property damage. Do not perform maintenance unless:

- Engine is off
- Product is parked on a level surface
- Parking brake is engaged
- Ignition key is removed
- Blades are disengaged
- All moving parts have stopped

Additional maintenance warnings:

- Allow the engine to cool before servicing.
- Disconnect the spark plug wires and the negative battery cable before repairs.
- Electrical shock hazard: Do not touch electrical components while the engine is running.
- Do not test the ignition system without using heavy-duty gloves.
- Blades are sharp. Wear protective gloves when servicing.
- Do not crank the engine with spark plugs or ignition cables removed.
- Ensure all fasteners are properly tightened before operation.
- Do not adjust engine governors. Speeding can cause severe damage.

- Use only manufacturer-approved replacement parts. Use of non-approved parts voids the warranty.
- Maintain the product according to the recommended service schedule.

ADDITIONAL SAFETY WARNINGS

⚠ WARNING!

- **Pressurized fuel hazard:** Fuel escaping under pressure can penetrate the skin and cause serious injury. Seek immediate medical attention by escaping fuel.
- **Carbon monoxide hazard:** Engine exhaust contains carbon monoxide, an odorless and deadly gas. Do not operate the product in enclosed or poorly ventilated areas.

2. EXPLODED VIEW AND PARTS

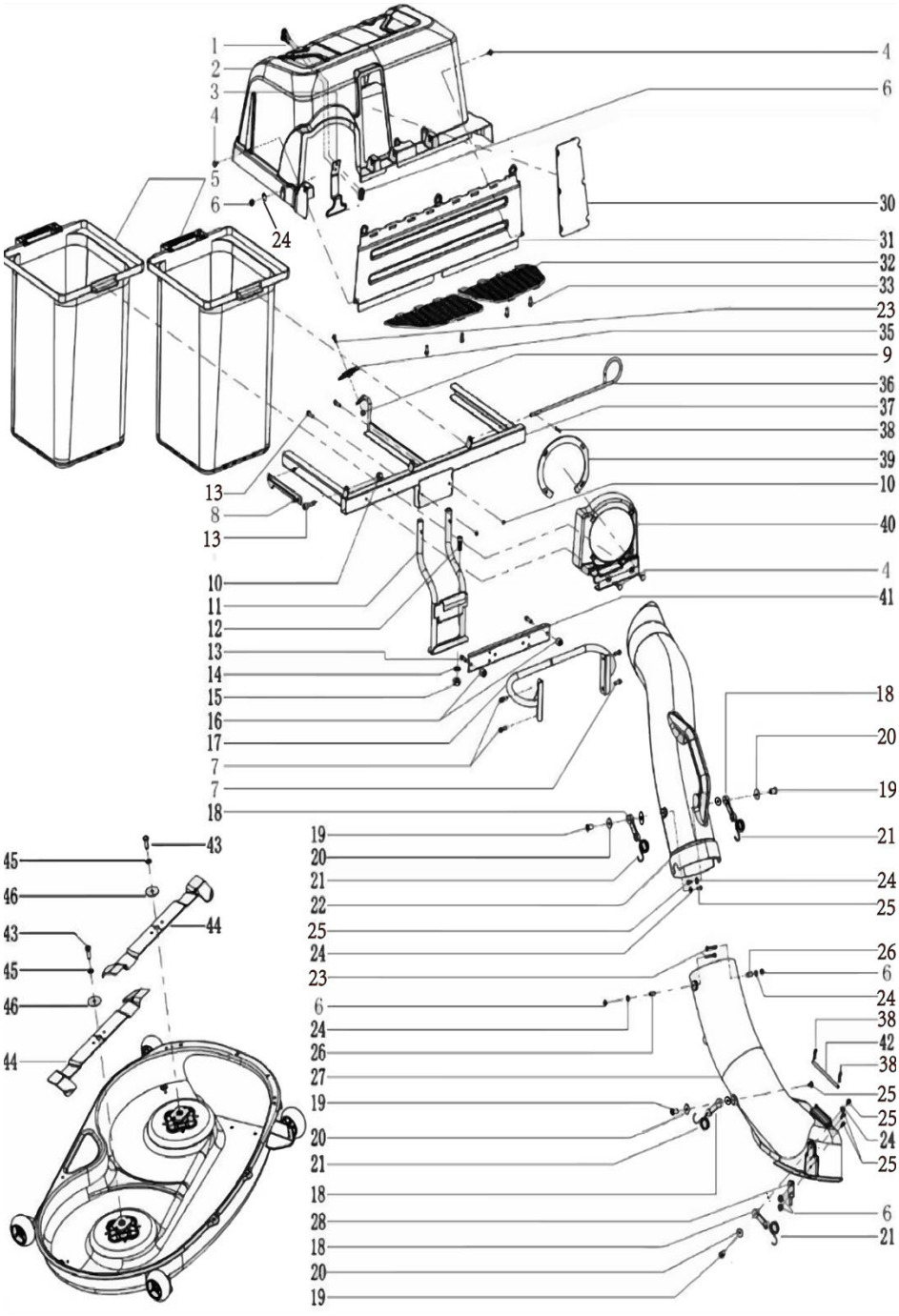

Ref No	Part Name	Qty	Part #
1	SCREW M6x16	2	20061013
2	GRASS CATCHER COVER	1	20101402
3	PLASTIC CARD HOOK	1	20101385
4	CHRISTMAS TREE-SHAPED RIVET	4	20101396
5	GRASS BAG ASSEMBLY	2	20101399
6	NUT M6	6	20061421
7	HEX FLANGE BOLT 5/16-18T x3/4	4	20082799
8	WELDED SUPPORT ROD	1	20101716
9	FLANGE LOCK NUT M6	1	20061385
10	FLANGE LOCK NUT M8	1	20061348
11	BENT PIPE SUPPORT	1	20101824
12	HEXAGON SOCKET HEAD CAP SCREWS M12x1.25x30	1	20101823
13	FLANGE BOLT M8x40	3	20061254
14	WASHER 12	1	20061429
15	FLANGE NUT M12x1.25	1	20061380
16	SPACER	2	20085165
17	HITCH BRACKET	1	20101374
18	CHUTE STRAP	4	20071032
19	FLAT HEAD RIVET NUT M6x13.5	4	20061423
20	BIG WASHER 10	4	20061542
21	STRAP SPRING HOOK	4	20101919
22	UPPER CHUTE	1	20101365
23	HEXAGON HEAD SOCKET CAP SCREW M6x20	3	20060858
24	BIG WASHER 6	7	20061539
25	HEXAGON HEAD SOCKET CAP SCREW M6x16	6	20060893
26	SPACER	2	20101367
27	LOWER CHUTE	1	20101375
28	CHUTE-FIXING PIN	1	20102063
30	TRANSPARENT VIEWING WINDOWPANE	1	20101387
31	BAFFLE PLATE	1	20101405
32	FILTERING GRASS BOARD	2	20101370
33	HEXAGON FLANGE SELF-TAPPING SCREW ST4.8x16	4	20084298
35	METAL FRAME HOOK	1	20101373
36	COVER HINGE PIN	1	20101372
37	DOUBLE BAG SUPPORT ASSEMBLY	1	20101392
38	SPRING PIN	3	20070576
39	PACKING WASHER	1	20101408
40	UPPER CHUTE CONNECTING PLATE	1	20101369
41	HITCH PLATE	1	20085158
42	PIN ϕ8×168	1	20082335
43	BOLT	2	20061267
44	HIGH-LIFT BAGGER BLADE	2	20101902
45	BLADE WASHER	2	20102082
46	DISC WASHER	2	20100163
1	SCREW M6x16	2	20061013

3. MATERIALS IN BOX

IMPORTANT!	CAUTION!	WARNING!
ALWAYS READ THE OPERATOR'S MANUAL CAREFULLY AND FOLLOW THE SAFETY INSTRUCTIONS	WEAR THICK GLOVES DURING THE ASSEMBLY PROCESS.	WHEN WORKING WITH THE PRODUCT, WEAR THE REQUIRED SAFETY EQUIPMENT.

⚠ NOTICE!

∗ Your PRORUN Grass Bagger requires the use of the hitch plate assembly supplied with your PRORUN Gas Riding Mower (Package 7). If the hitch plate has not been assembled or cannot be located, contact proruntools.com, info@proruntech.com, or 1-844-0882 for assistance.

Before installation, remove all packages from the box and verify that all parts are present using the illustrations below. Keep packages grouped by assembly to avoid confusion during installation.

UNPACKING MATERIALS

- **Package 1:** 1 grass bag assembly
- **Package 2:** 1 upper chute assembly (1) and 1 packing washer (2)
- **Package 3:** 1 lower chute assembly
- **Package 4:** 1 Hitch bracket (1) and 4 hex flange bolts 5/16-18t x3/4 (2)
- **Package 5:** 1 bent pipe support (1), 2 M8×40 bolts (2), 2 flange lock nut M8 (3), 1 hexagon socket head cap screws m12x1.25x30 (4), 1 washer 12 (5), and 1 flange nut M12x1.25 (6)
- **Package 6:** 2 high-lift bagger blades (1), 2 bolts (2), 2 blade washers (3), and 2 disc washers (4)
- **Package 7:** 1 hitch plate, 2 flange bolts m8×40 (2), and 2 bushings (3)

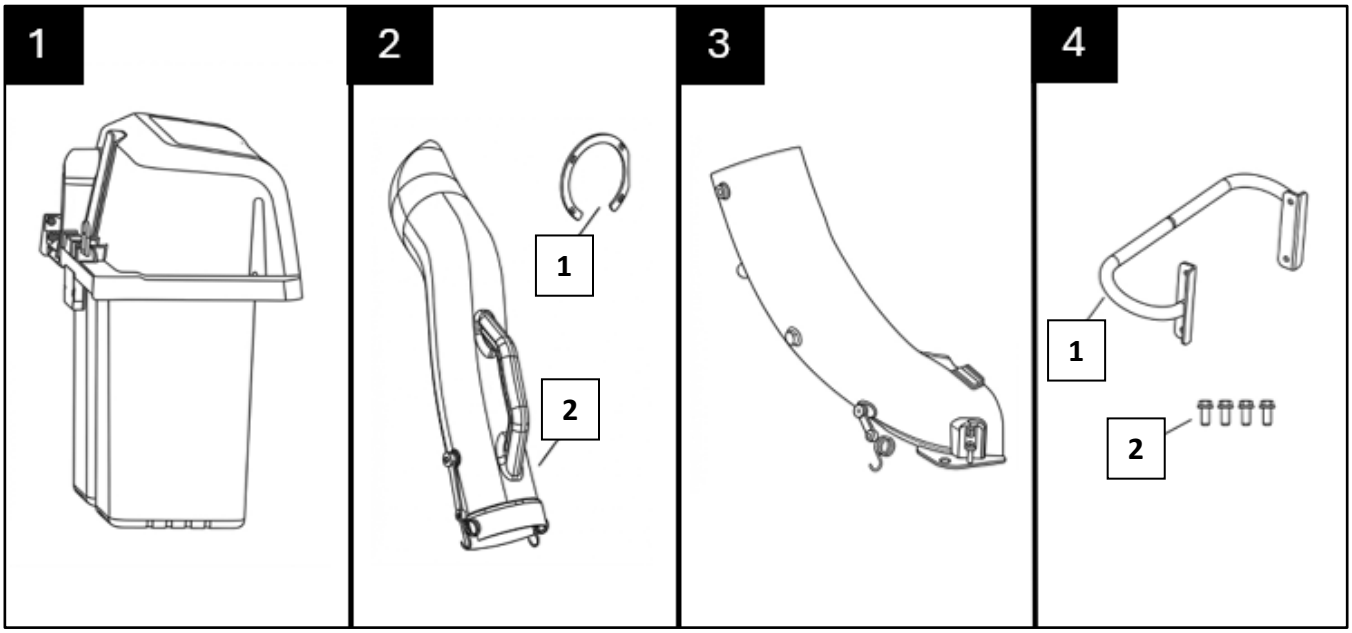

CONTINUES ON PAGE 10

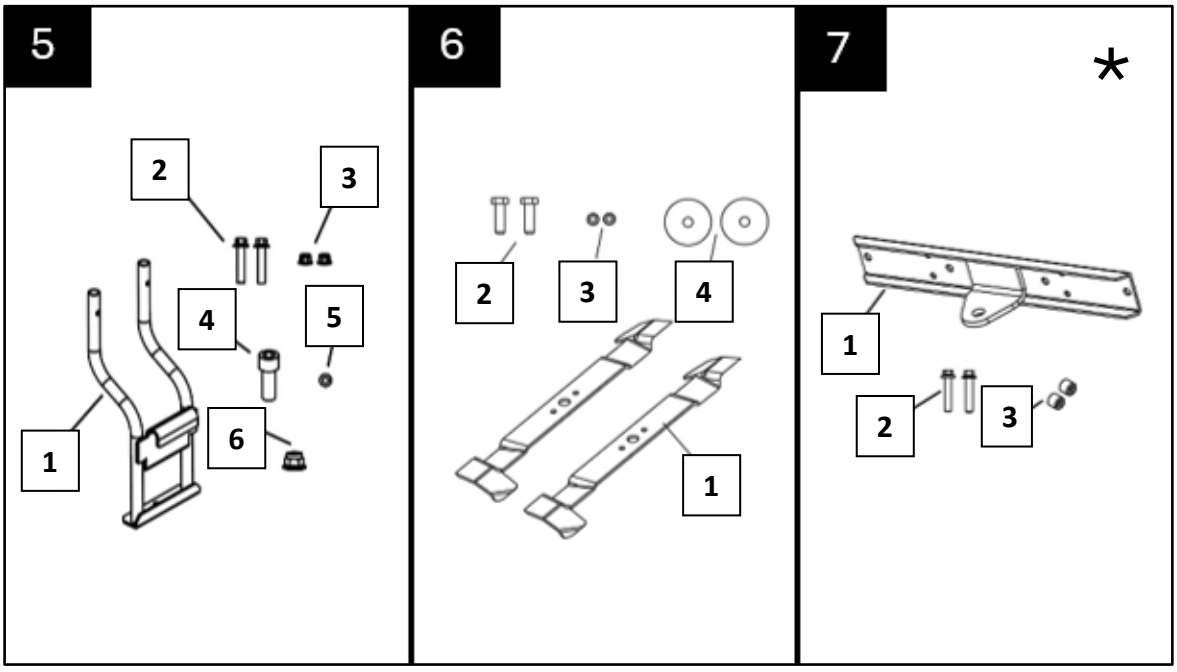

* **Your PRORUN Grass Bagger requires the use of the hitch plate assembly supplied with your PRORUN Gas Riding Mower (Package 7). If the hitch plate has not been assembled or cannot be located, contact prorountools.com, info@proruntech.com, or 1-844-0882 for assistance.**

4. ASSEMBLY AND INSTALLATION

The following tools are required to assemble the bagger:

- 10 mm, 13 mm, 14 mm, and 18 mm hex or socket wrenches
- 10 mm Allen wrench
- Heavy-duty work gloves

REPLACE THE BLADES (PACKAGE 6)

The blades that come with your bagger are specifically designed to deliver maximum bagging performance. The assembly of these high-lift bagger blades is required.

PROCEDURE

REMOVAL OF THE HIGH-LIFT BAGGER BLADES

As shown in Figure 1.1:

Remove components in the following order:

1. **2 bolts (4)**
2. **2 disc washers (3)**
3. **2 blade washers (2)**
4. **2 high-lift bagger blades (1)**

Loosen fasteners counterclockwise.

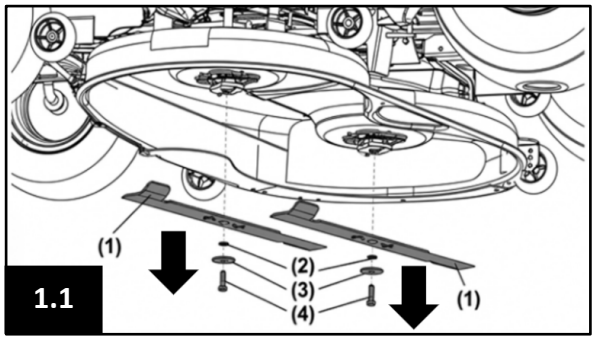

1.1

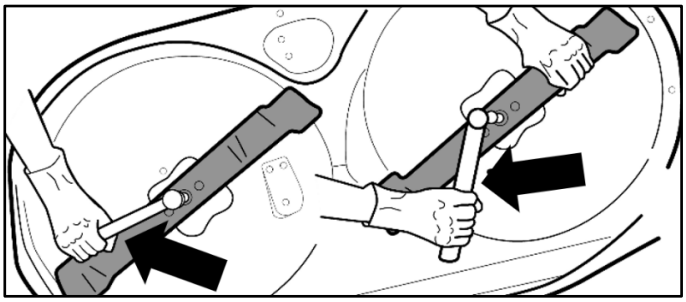

INSTALLATION OF THE HIGH-LIFT BAGGER BLADES

As shown in Figure 1.2:

Install components in the following order:

1. **2 high-lift bagger blades (1)**
2. **2 blade washers (2)**
3. **2 disc washers (3)**
4. **2 bolts (4)**

Tighten bolts to 40-45 Nm (30-33 ft-lb) using a torque wrench.

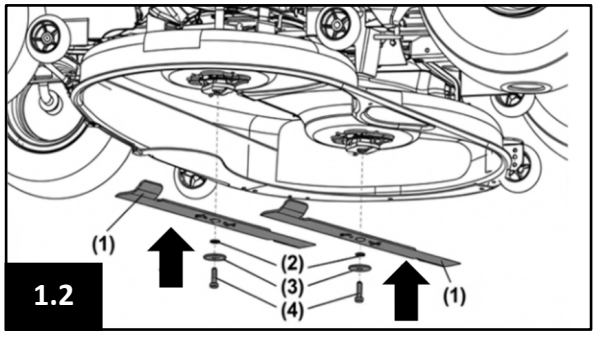

1.2

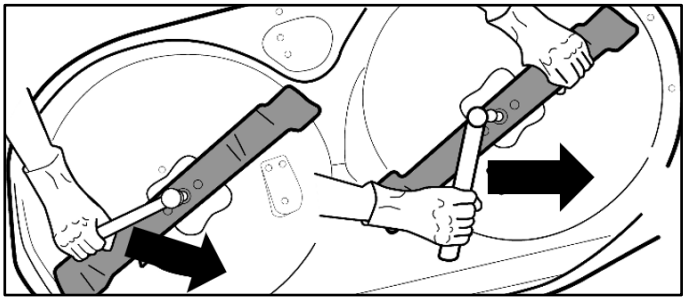

INSTALL THE HITCH BRAKET (PACKAGES 4 & 7)

The PRORUN Grass Bagger requires the use of the hitch plate assembly supplied with your PRORUN Gas Riding Mower.

PROCEDURE

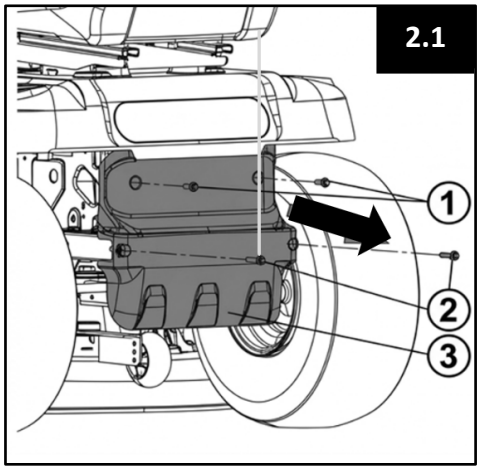

REMOVAL OF GEARBOX COVER

As shown in Figure 2.1:

Remove the **2 M6×16 Screws (1)** and the **2 M8×20 bolts (2)**, then remove the **gearbox cover (3)** as shown in Figure 2.1.

NOTICE! If your hitch plate was assembled on your mower, remove it before starting the instructions in Figure 2.1.

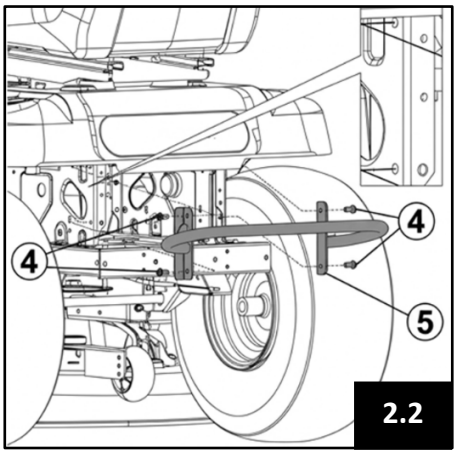

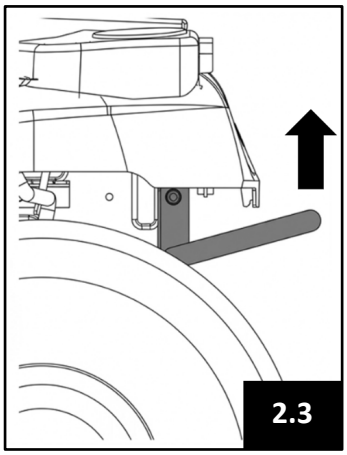

INSTALLATION OF THE HITCH BRACKET

As shown in Figure 2.2:

Use **4 hex flange bolts 5/16-18T x3/4 (4)** to install the **hitch bracket (5)** as shown in Figure 2.2.

As shown in Figure 2.3:

The proper assembly of the hitch bracket

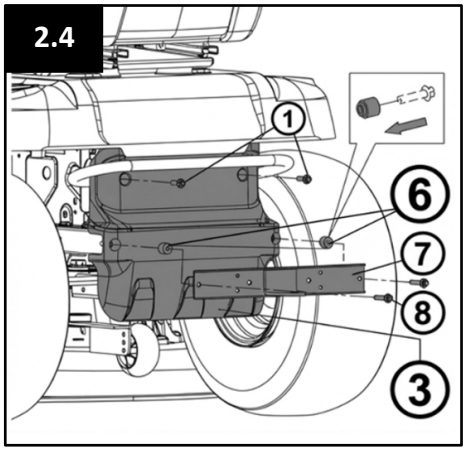

REINSTALLATION AND ATTACHING THE HITCH PLATE

As shown in Figure 2.4:

Reinstall the **gearbox cover (3).** Secure with the **2 screws M6x16 (1)**, then install the **hitch plate (7)** using the **2 spacers (6)** and the **2 M8x20 bolts (8)** as shown in Figure 2.4.

INSTALL THE GRASS BAG ASSEMBLY (PACKAGES 1 AND 5)

PROCEDURE:

INSTALLATION OF BENT PIPE ASSEMBLY

3.1

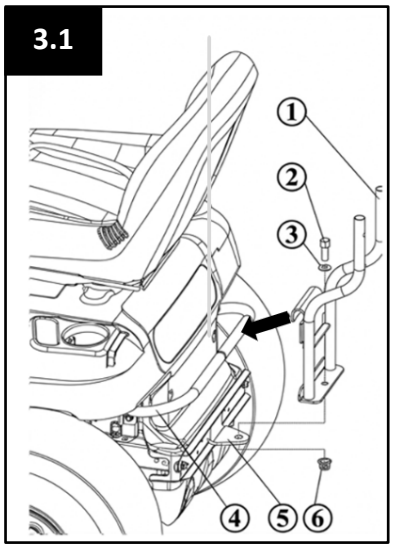

3.2

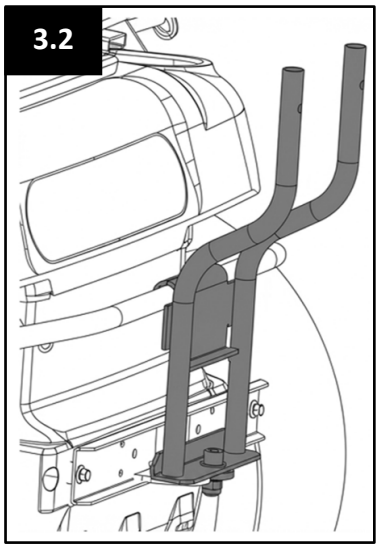

As shown in Figure 3.1:
Secure the **bent pipe support (1)** onto the **hitch bracket (4)** using the **1 hexagon socket head cap screws m12x1.25x30 (2)**, **1 washer 12(3)**, and **1 flange nut m12x1.25 (6)** as shown in Figure 3.1.

As shown in Figure 3.2:
The proper assembly of the bent pipe support assembly.

3.3

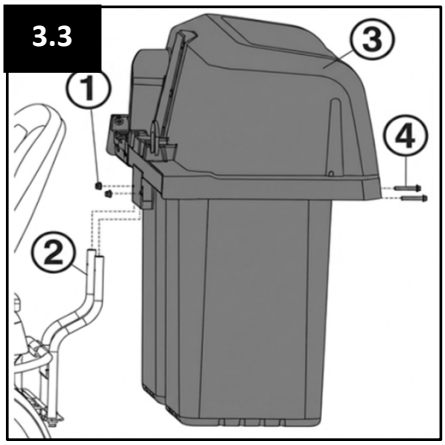

INSTALLATION OF THE GRASS BAGS
As shown in Figure 3.3:
Install the **grass catcher cover & grass bag assembly (3)** onto the **bent pipe support (2)** using **2 M8x50 bolts (4)** and **2 flange lock nuts M8 (1)** as shown in Figure 3.3.

3.4

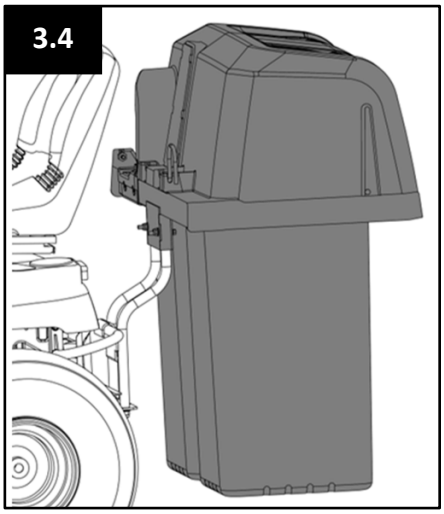

As shown in Figure 3.4:
The proper assembly of the grass catcher cover and collection bag assembly.

INSTALL THE LOWER CHUTE (PACKAGE 3)

PROCEDURE

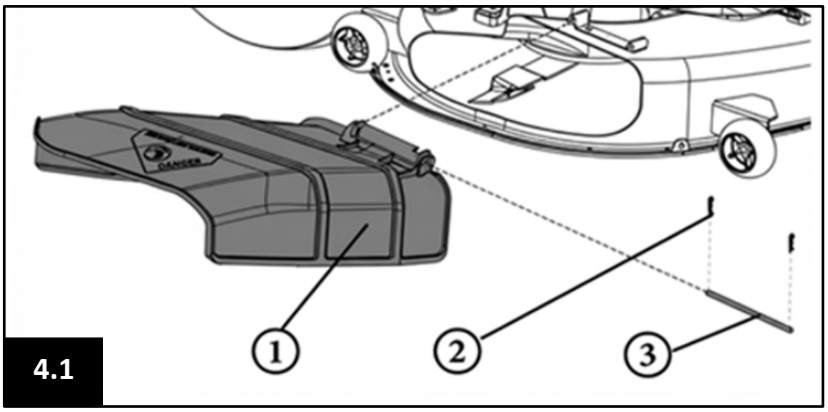

4.1

REMOVAL OF SIDE DEFLECTOR
As shown in Figure 4.1:
Remove the **2 spring pins (2)**, then remove the **pin ϕ8×168 (3)**, and finally remove the **side deflector (1)**.

NOTICE: Be sure to keep the **pin ϕ8×168 (3)**, it will be required to attach the lower tube to the deck.

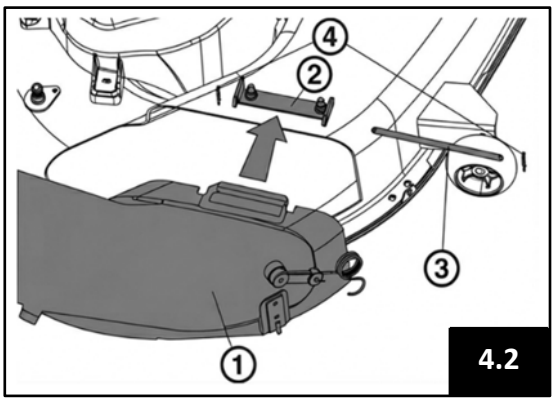

4.2

INSTALLATION OF THE LOWER CHUTE TUBE
As shown in Figure 4.2:
Install the **lower chute tube (1)** onto the **double-lug bracket (2)** in the direction of the arrow.

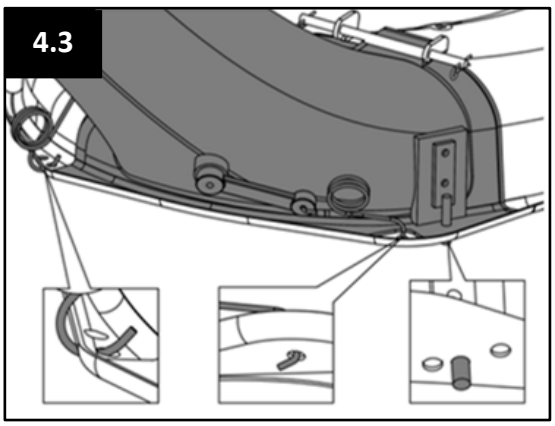
4.3

INSTALLATION OF THE CHUTE STRAP WITH SPRING HOOK
As shown in Figure 4.3:
Install the **chute strap with spring hook** into the corresponding holes of the deck.

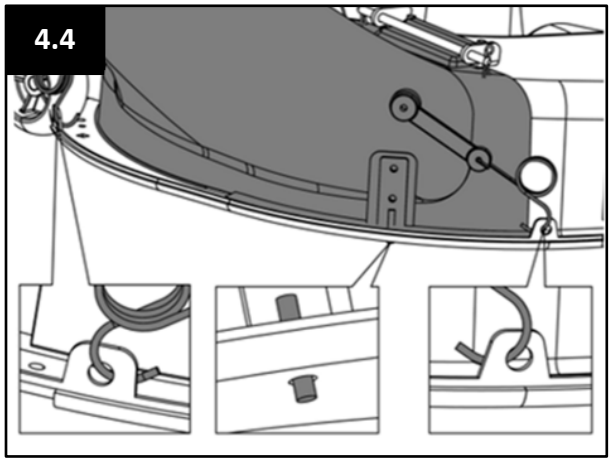

CONTINUED FROM PAGE 15

INSTALLATION OF THE CHUTE STRAP WITH SPRING HOOK 2

As shown in Figure 4.4:

Install the **chute strap with spring hook 2** into the corresponding holes on the deck.

INSTALL THE UPPER CHUTE ASSEMBLY (PACKAGE 2)

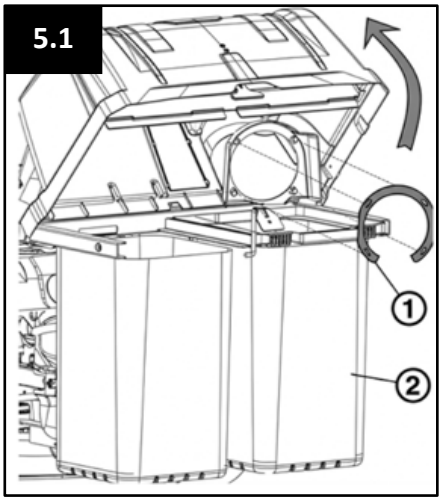

INSTALLATION OF THE PACKING WASHER

As shown in Figure 5.1:

Open the **grass catcher cover (2)**. Snap the **packing washer (1)** into the slot of the **upper chute connecting plate** until it is fully seated and secure.

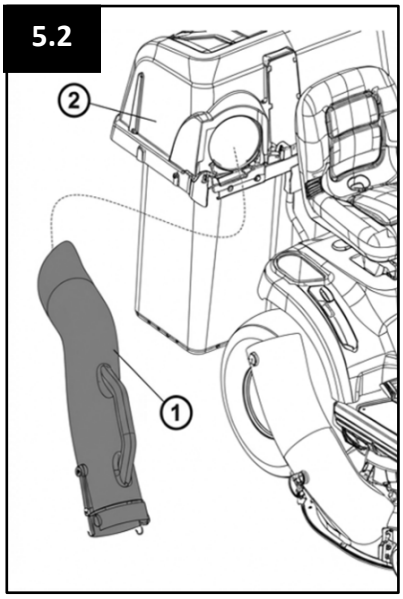

INSTALLATION OF THE UPPER CHUTE TUBE

As shown in Figure 5.2:

Install the **upper chute (1)** onto the **upper chute connecting plate/ grass catcher cover (2)**.

⚠ **NOTICE:**

Ensure the handle is facing upward. Adjust the upper chute assembly to the optimal position to ensure proper fit and airflow.

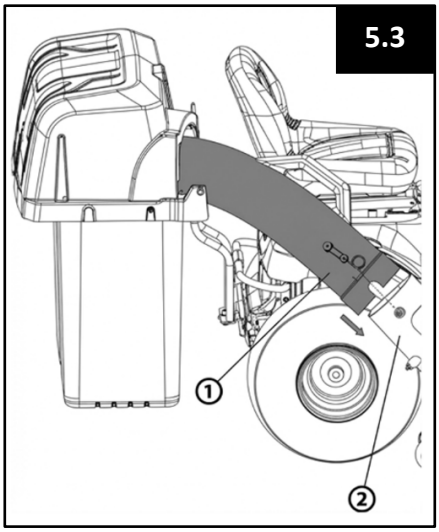

CONNECT THE UPPER CHUTE TO THE LOWER CHUTE

As shown in Figure 5.3:

Align the notches on both sides of the **upper chute (1)** with the posts on the **lower chute (2)**. Install the **upper chute (1)** onto the **lower chute (2)** in the direction indicated by the arrow.

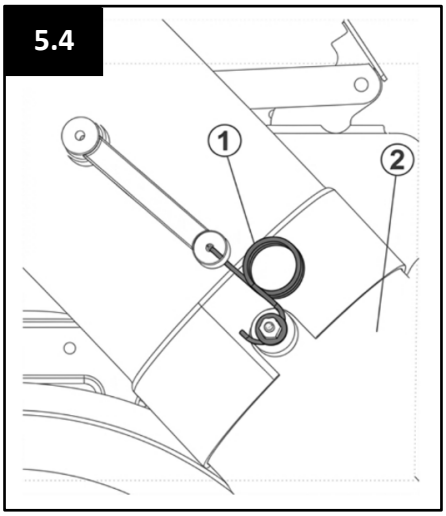

CONTINUED FROM PAGE 17

INSTALLATION OF CHUTE STRAP WITH SPRING HOOK 2
As shown in Figure 5.4:
Hook the **two strap spring hooks (1)** onto the posts on both sides of the **lower chute (2)** assembly. Ensure the springs are securely fastened and properly tensioned.

ONCE THESE STEPS ARE COMPLETED, THE EQUIPMENT WILL BE FULLY ASSEMBLED.

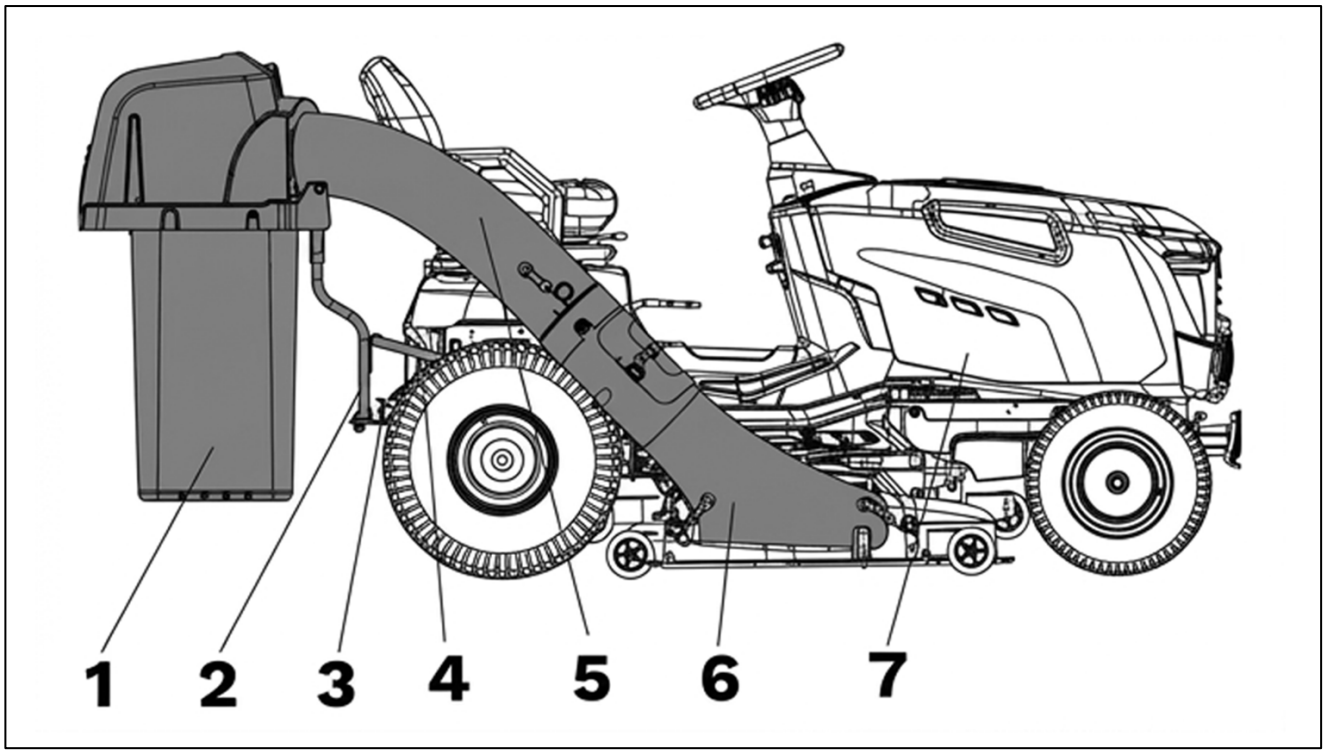

1. Grass bag assembly
2. Bent pipe support assembly
3. Hitch plate assembly
4. Hitch bracket assembly
5. Upper chute assembly
6. Lower chute assembly
7. Mower body.

5. OPERATION – USING YOUR GRASS BAGGER

GETTING THE BEST PERFORMANCE (BAGGING TIPS)

1. Maintain a steady mowing speed. Avoid rushing, as excessive ground speed can cause grass clippings to be left uncollected.
2. Mow only when the grass is dry. Wet grass restricts airflow and increases the likelihood of clogging.
3. Set the correct cutting height. Raise the mower deck when cutting tall or dense grass to prevent overloading the discharge chute.
4. Overlap mowing passes slightly. This improves collection efficiency and reduces missed clippings.
5. Keep the chute clear. If clippings begin to clump or the discharge weakens, stop the mower and inspect the chute for buildup.
6. Keep mower blades sharp. Sharp blades produce finer clippings and improve airflow, resulting in better bagging performance.

PROVIDING PROPER AIRFLOW

Strong airflow is essential for effective bagging performance. To maintain proper airflow:

1. Clean the underside of the mower deck regularly. Remove accumulated grass and debris before each use.
2. Inspect the chute system. Ensure the upper chute, lower chute, and all openings are clear of obstruction.
3. Check the grass catcher cover and seals. Confirm that the grass catcher cover closes completely to maintain proper suction.
4. Operate at full engine speed. Always mow at full throttle to maximize airflow through the chute system.
5. Avoid mowing extremely tall or wet grass. These conditions significantly reduce airflow and increase the risk of clogging.

FILLING AND EMPTYING THE BAGS

Filling

1. Ensure the grass catcher cover is fully closed before beginning operation.
2. Monitor the fill level of the bags. Reduced discharge performance or clumping typically indicates the bags are full.
3. Stop the mower and disengage the high-lift bagger blades before checking or emptying the bags.

Emptying

1. Park the mower on a flat, level surface and disengage the high-lift bagger blades.
2. Open the grass catcher cover.
3. Lift each grass bag upward and off the frame track.
4. Empty the contents into a suitable disposal container or compost area.
5. Reinstall the bags by sliding them back into the double bag support assembly until fully in place.
6. Securely close the grass catcher cover before resuming operation.

PRORUN® LIMITED WARRANTY

Warranty Coverage:
PRORUN®, a brand under TOPSUN USA Inc., warrants that its products are free from defects in material or workmanship under normal use and maintenance. The company will, at its discretion, repair or replace any defective product or part covered by this Limited Warranty, free of charge at any authorized Servicing Dealer / Center using OEM replacement parts, subject to the limitations and exclusions described below.

Limited Warranty Period:
PRORUN® products are warranted to the original retail purchaser from the date of retail purchase for the applicable period of time specified in the product documentation or as listed below. Please note that certain products may have extended warranties as indicated.

What is NOT Covered:
This Limited Warranty does not cover:

- Replacement of normal wear parts, including but not limited to air filters, belts, blades (excluding normal wear for electric units), fuel filters, lubricants, spark plugs, seats, etc.
- Damage caused by improper use, neglect, modifications, improper servicing, or use of unauthorized attachments.
- Damage resulting from the use of improper fuel or failure to follow prescribed fuel and oil usage.
- Damage caused by external factors such as accidents or events beyond PRORUN®'s reasonable control.
- Damage due to improper setup, pre-delivery service, or repair service by unauthorized personnel.
- Damage to batteries, including failure due to discharge or improper voltage use, is not covered under this warranty. Please note that batteries can be susceptible to damage from improper storage, particularly in extremely low temperatures. It is recommended that users store batteries indoors during the winter or any period of extreme temperatures to prevent potential damage.
- Damage due to exposure of products to temperatures outside product specifications.

Your Responsibilities:
To maintain your rights under this Limited Warranty, you must exercise reasonable care and use of the product as outlined in the operator's manual. Failure to perform required maintenance as described will void this warranty. Additionally, you must cease using the product immediately upon any failure or damage and take it to an authorized servicing dealer for inspection.

©PRORUN 04/08/2024

PRORUN® LIMITED WARRANTY

Limitation of Liability for Personal Injury:
PRORUN® shall not be liable for any personal injury, including but not limited to bodily harm, illness, or death, arising from the use, misuse, or improper handling of its products. Users assume all risks associated with the use of PRORUN® products and are responsible for ensuring safe operation and adherence to safety guidelines provided in the operator's manual. PRORUN® shall not be held liable for any damages or injuries resulting from misuse, negligence, improper maintenance, alteration, or unauthorized repair of its products. Users are advised to exercise caution and follow all safety precautions to prevent personal injury while using PRORUN® products.

Warranty Exclusions, Disclaimers, and Limited Rights:
PRORUN® shall not be liable for any incidental, consequential, special, or punitive damages or losses. Your remedy is limited to repair or replacement of the product or part, at PRORUN®'s discretion. The company's liability shall not exceed the actual amount paid for the defective product.

It should be noted that PRORUN® is not liable for any personal injury due to misuse. Our manuals typically include safety requirements that users must adhere to.

How to Obtain Service:
To obtain warranty service, you must take your product to an authorized Servicing Dealer / Center. Proof of purchase is required, including date, product model, and serial number. Any costs associated with transporting the product are your responsibility.

For assistance in locating an authorized Servicing Dealer / Center or for inquiries, please visit our website or contact our customer service hotline at 1-844-905-0882.

Additional Information:
Registering your product is not a condition of warranty service; however, it may help ensure that you receive important product information.

Disclaimer:
This Limited Warranty gives you specific legal rights, and you may also have other rights based on your locality. Any warranty implied by state law is hereby disclaimed to the extent permitted by law. Some localities may not allow exclusions of incidental or consequential damages or limitations on how long an implied warranty lasts, so the above limitations may not apply to you.

PRODUCT PLATFORM	RESIDENTIAL WARRANTY	COMMERCIAL WARRANTY
Gas Handheld	3 Years	1 Year
Gas Wheeled	2 Years	Not Offered
60V Battery Platform	3 Years (Tool & Battery)	2 Years (Tool & Battery)
20V Battery Platform	3 Years (Tool & Battery)	Not Offered

Note:
This warranty page is subject to change without notice. Please refer to the latest product documentation or contact customer service for the most up-to-date warranty information.

©PRORUN 04/08/2024

PRORUN continually improves its products. As a result, you may observe minor differences between your machine and the descriptions contained in this Operator's Manual. Modifications may be made to the machine without notice and within the obligation to update this manual, provided that the essential safety and functional characteristics remain unchanged.

For questions, technical assistance, or current product specifications, please contact PRORUN Customer Service.

PRORUN / TOPSUN USA
Address: 10130 Perimeter Parkway, Suite 140
Charlotte, NC 28216
Customer Service: (844) 905-0882
Email: info@proruntech.com
Website: www.proruntools.com

ZHEJIANG ZHONGJIAN TECHNOLOGY CO., LTD
Address: No.155 Mingyuan North AVE, Economic Development Zone,
Yongkang, Zhejiang, 321300, P.R. CHINA
Email: sales@topsunpower.cc
Website: www.topsunpower.cc

MADE IN CHINA