SPARKX
Powered by Creality

Quick Start Guide

SPARKX i8

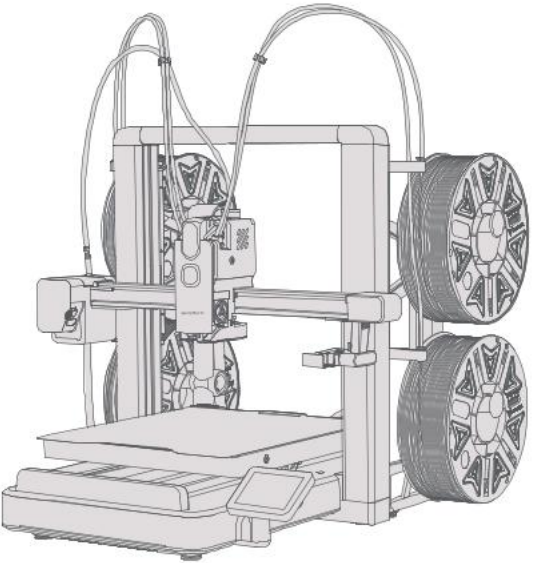

Please read this guide carefully before using the product.
Note: Do not power on the printer before installation is complete.

V1.0

Let's Begin Your Printing Journey!
Scan the QR Code.

SPARKX Wiki

Download Creality Cloud

Download Creality Print

Discover Premium Models

After-Sales Service Guide

Thank you for choosing SPARKX products!
For detailed after-sales service information, please visit our official website (www.creality.com) or scan the QR code below.

Creality Official Website

Service Policy

You can also reach us for help and support through the following channels:
Global Service Hotline:1-833-513-5012
Global Service Email: cs@creality.com
You may also visit the Creality Wiki (https://wiki.creality.com) to explore more detailed after-sales tutorials.
Creality will continue to improve and optimize its after-sales service policies and update them promptly on official platforms. Please stay informed. Creality reserves the right to interpret these policies.

1 / Packing List

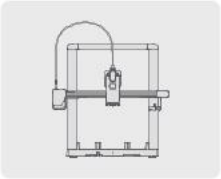

❶ Printer Frame

❷ Base Housing

❸ Print plate

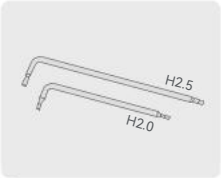

❹ Hex wrench

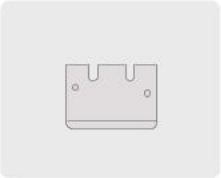

❺ Scraper Blade

❻ Power cable

❼ Filament sample

❽ M3×8 Screw*4

❾ M3×34 Screw*10

❿ 60cm PTFE tube*2
80cm PTFE tube*2

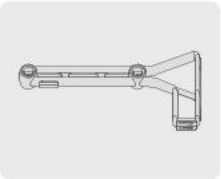

⓫ Main bracket*2

⓬ Bridge connector*2

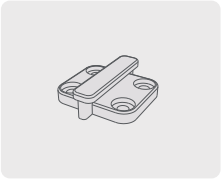

⓭ Slide buckle*2

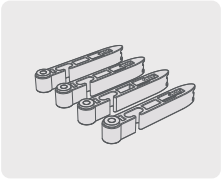

⓮ Pneumatic fitting connector

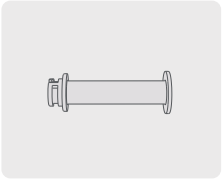

⓯ Spool holder*4

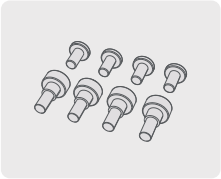

⓰ Spool Rack Mounting Screws:
M3×6 Screws*4
Shoulder Screws*4

* The above list is for reference only.
Please refer to the actual items received.t

* Note: We strongly recommend scanning the QR code to view the installation Wiki and video for better guidance during the printer assembly.

2 / Install the Printer

❶ Take out the Printer Frame and the Base Housing. Insert the Base Housing through the Printer Frame and press it downward until it clicks into place.

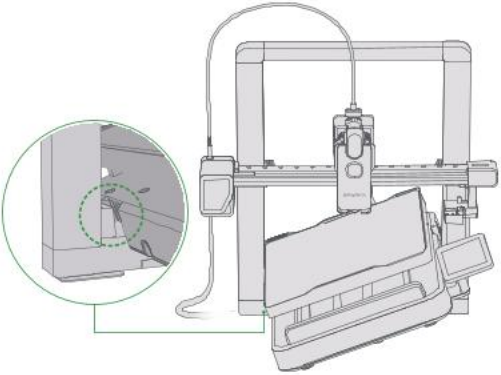

❷ After the assembly is in place, use an H2.5 hex wrench to tighten the 10*M4×34 screws on the top of the base. You may move the heated bed forward and backward to facilitate the operation.

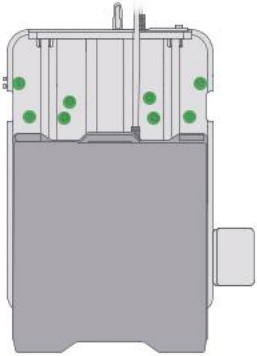

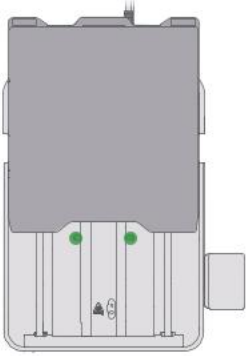

❸ Use an H2.0 hex wrench to tighten the 2*M3×8 screws on each side.

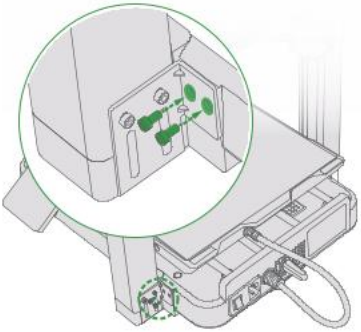

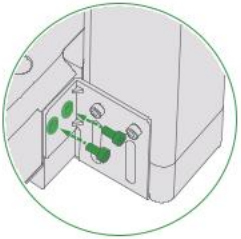

❹ Open the bottom mainboard cover, connect the signal cables to their corresponding ports, and reinstall the cover after the connections are completed.

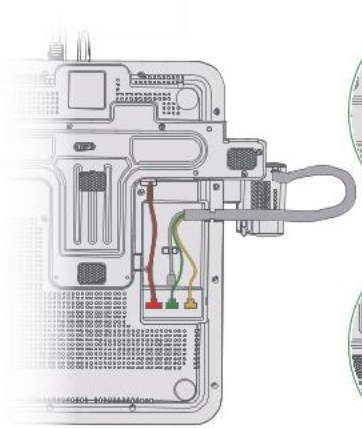

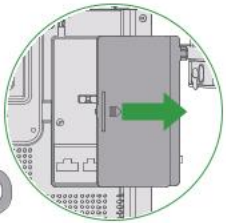

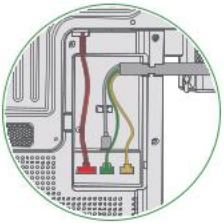

3 / Unlock the X-Axis

❶ Take off the protective cardboard from the X-axis and toolhead.

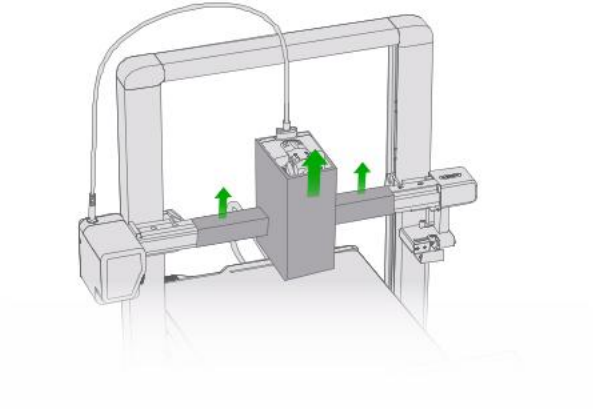

❷ Use the H2.0 hex wrench to remove the four screws securing the two X-axis transport brackets at the rear of the printer, then remove both brackets.

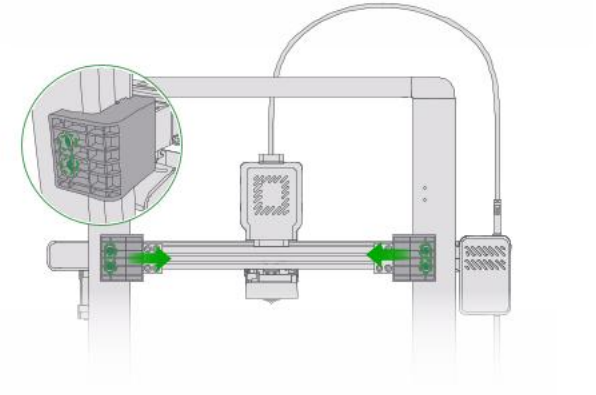

4 / Install the print plate

❶ Place the print plate in the orientation shown, ensuring that its edges are aligned with the heated bed.

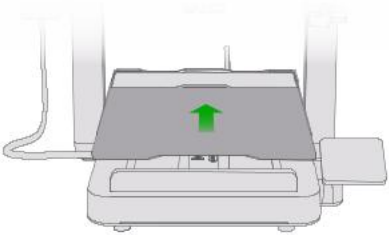

5 / Install the spool rack

❶ Take out four M3*6 screws and two slide buckles.Using the H2.0 hex key, install the two slide buckles into the screw holes on the left and right rear sides of the gantry. Note that these are the second set of screw holes from the top of the gantry, as shown below;

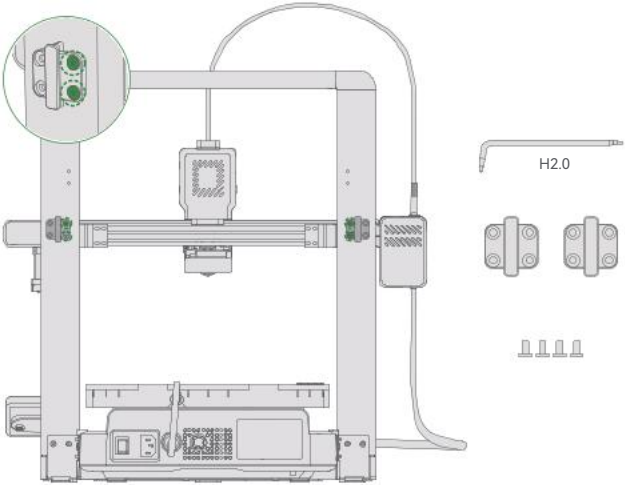

❷ Take out four pneumatic fitting connectors and two bridge connectors, and assemble the left and right bridge connector assemblies as shown below;

Left bridge connector installation:

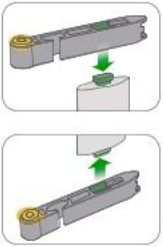

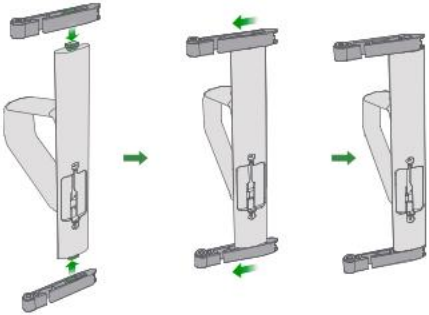

Note: Keep the pneumatic fitting facing upward.

Right bridge connector installation:

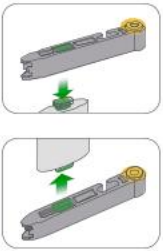

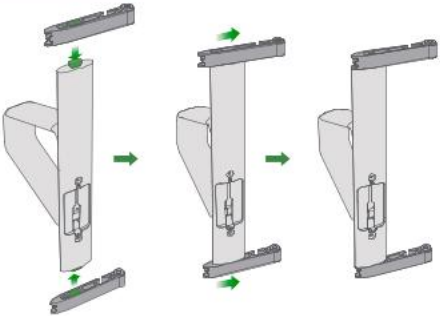

Note: Keep the pneumatic fitting facing upward.

3 Slide the left bridge connector into the main bracket from bottom to top, then screw in the spool holder counterclockwise in the direction shown. Use the same method to assemble the right bridge connector, main bracket, and spool holder;

Left bridge connector, bracket, and spool holder installation:

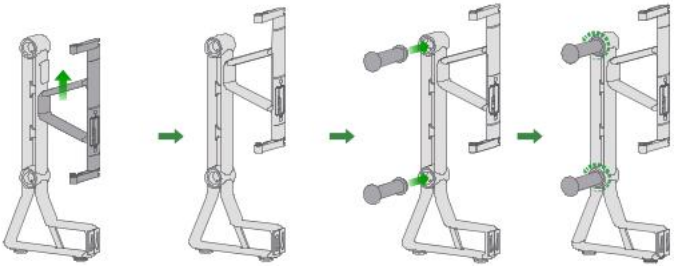

Right bridge connector, bracket, and spool holder installation:

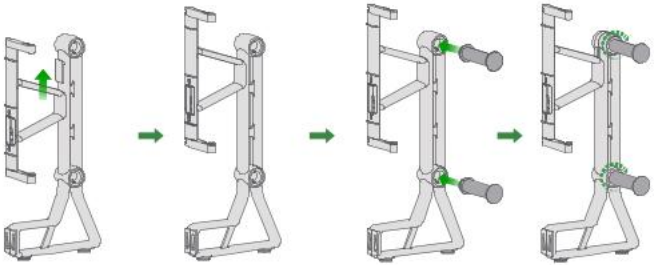

❹ Slide the assembled right spool rack down into the slide buckles and shoulder screws, and make sure it is fully seated;

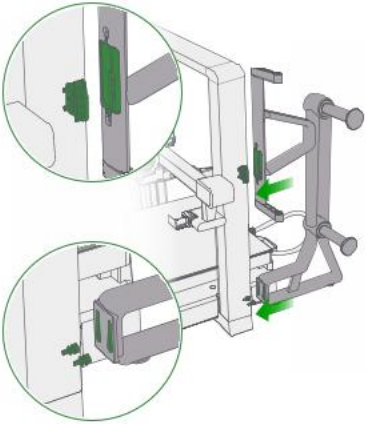

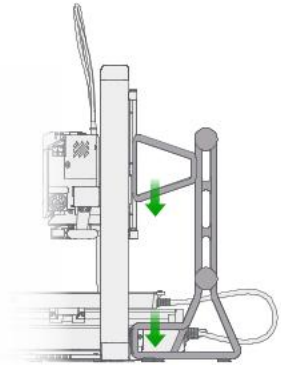

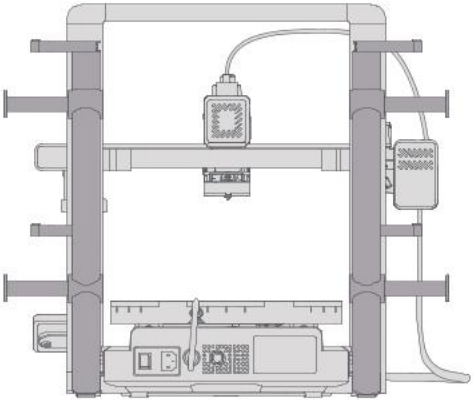

6 / Connect the PTFE Tubes

1. As shown, insert the two longer PTFE tubes (80 cm) into pneumatic fittings 1 and 4 below the spool holders on both sides. The openings in the upper pneumatic fittings can be used to help secure the tubes.
2. As shown, insert the two shorter PTFE tubes (60 cm) into ports 2 and 3 above the spool holders on both sides.
3. Following the color coding, connect the PTFE tubes from the spool holders to the correspondingly numbered channels on the toolhead.
   Important: Make sure each tube is connected to the correct channel, as incorrect connections may affect subsequent operation.
4. Use the included cable clips to secure and organize the PTFE tubes.

Red and yellow: 80 cm PTFE tubes.

Blue and green: 60 cm PTFE tubes.

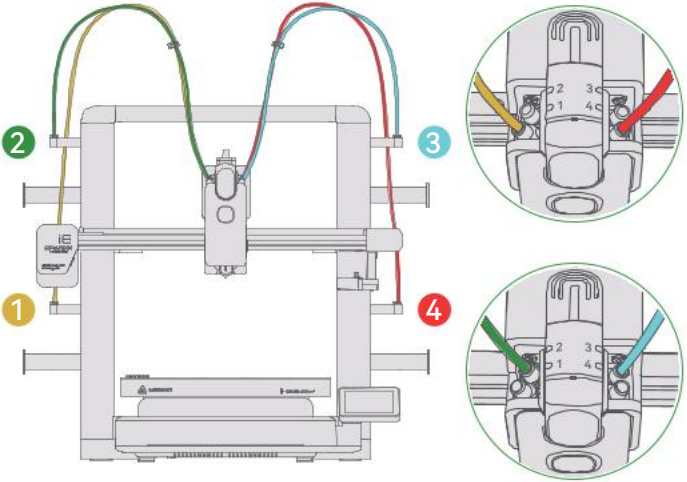

❺ Completed installation shown below. Leave sufficient operating clearance.

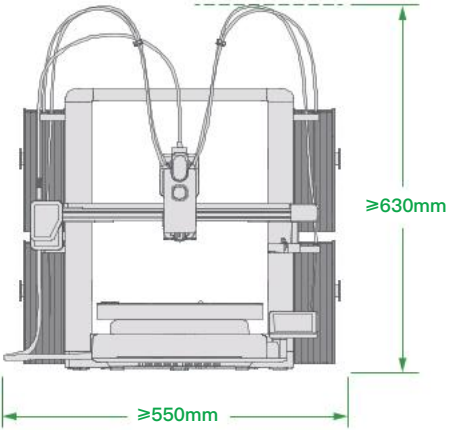

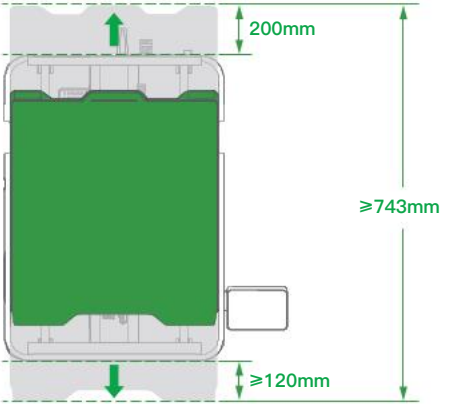

7 / Power On

❶ Plug in the power cable and press the power switch on the back of the machine.

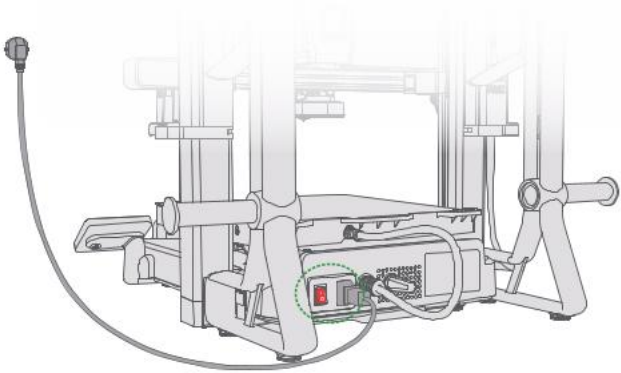

8 / Connect to Network

a. Follow the on-screen instructions until you reach this page, then select the network you want to connect to.

b. After connection, you can enjoy more online services.

9 / Log in to Account

a. Scan the QR code on the printer screen to download the Creality Cloud App. Register and log in to your Creality Cloud account.

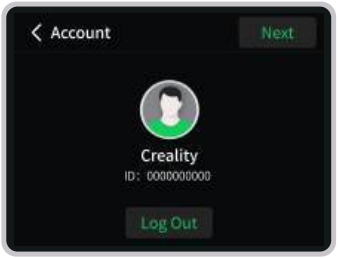

b. Use the Creality Cloud App to scan the QR code on the printer screen, and follow the instructions in the App to complete account login.

10 / Printer Self-check

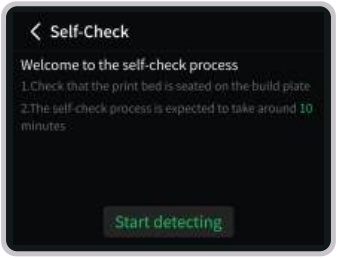

a. Follow the on-screen prompts to start the device self-check.

b. Wait patiently until the self-check is completed, then you can start using the printer.

During the self-check, vibration and noise are normal phenomena.

11 / First Print Experience

❶ Place the filament spool on the spool holder. Insert the filament into the corresponding inlet and feed it through the PTFE tube until it reaches the toolhead and cannot be pushed any farther.

❷ Go to the Filament page and tap the Edit button to modify filament information.

a. When the filament shows a question mark, tap Edit.

b. Set the Brand – Color – Type – Name of the filament.

c. After completing the filament information setup, click Confirm.

d. The filament parameters are now set.

❸ Load each required filament in sequence.

a. Select the filament to be loaded, then tap “Load.”

b. Wait for loading to complete. Gently push the filament by hand to ensure successful loading.

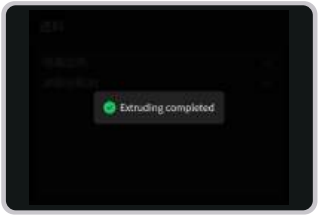

c. Filament loading completed. Repeat these steps for each filament you plan to use.

❹ Start Printing

* Before printing, ensure the print plate is placed flat and free of debris.

a. On the Home page, tap Print File.

b. Select the model you want to print.

c. Tap NEXT (It is recommended to enable the Print Calibration option).

d. Tap Print.Wait patiently for the printing to complete. (After printing, allow the print bed to cool down completely before removing the model.)

❺ Filament Mapping Instructions

For multi-color printing, you need to map the actual filament to the filament set in the print file.

ⓐ Represents the filament set in the print file.

ⓑ Represents the actual filament in use.

It is recommended to use actual filament colors as close as possible to the ones defined in the print file, otherwise purging results may be affected.

12 / Technical Specifications

Item		Specification
Basic Information	Model	SPARKX i8
	Brand	SPARKX
	Printing Technology	FFF
	Body Material	Metal、Plastic
	Input Voltage / Power	100-240V~ AC 50/60Hz Rated Power：110-130W Max Power：320-870W
	Physical Dimensions (W×D×H)	470*423*456mm^3
	Net Weight	9.72kg
	Build Volume (W×D×H)	260×260×255mm^3
	Display	2.85 inches 640*480 IPS Touch Screen
	Monitoring Camera	720P with LED fill light
	Ports	Creality 485 6pin
	Storage	8GB，Micro SD
Speed	Optimized Print Speed	300mm/s
	Optimized Acceleration	10000mm/s^2
	Max Print Speed	500mm/s
	Max Acceleration	10000mm/s^2
Supported Filament	PLA/PLA-Silk/PLA-CF/PETG	Recommended
Feature Configuration	Input Shaping	Supported
	Filament Runout Detection	Supported
	Filament Runout Recovery	Supported
	AI Monitoring	Supported，including build plate detection, spaghetti detection, and other features
	Empty Extrusion Monitoring	Supported
	Cutter Status Detection	Supported

Feature Configuration	Intelligent Status Indicator	Supported，RGB
	Audible Alerts	Supported
Toolhead	Number of Hot Ends	1
	Extruder	Direct Drive Extruder
	Quick-Release Hotend	Supported,Tool-Free Quick Release
	Cutter	Stainless Steel
	Max Hot End Temperature	300℃
	Nozzle Diameter	0.4mm(Included)， 0.2/0.6/0.8mm(Optional)
	Hot End Material	Hardened Steel
	Model Cooling Fan	Silent Fan
	Hotend cooling fan	Silent Fan
	Max Hot End Flow	25mm^3/s (Creality Hyper PLA, 220℃)
Hotbed	Max Print Plate Temperature	100℃
	Hotbed Power	750W@220V / 250W@110V
	Print Plate	Dual-Sided Gold Textured PEI Plate
Software	Slicer	Creality Print 7.0 or later
	Creality Cloud APP	Supported
Wi-Fi	Frequency Range	2.4GHz(2400~2483.5MH)
	Power	20.04dBm
	Protocol	IEEE 802.11b/g/n

SPARKX

Powered by Creality