PORTER CABLE®

20 Volt Max* 1/4" Hex Chuck Lithium Impact Driver



*Maximum initial battery pack voltage (measured without a workload) is 20 volts. The nominal voltage is 18.

Instruction manual

CATALOG NUMBER

PCC641

SAFETY GUIDELINES - DEFINITIONS

It is important for you to read and understand this manual. The information it contains relates to protecting **YOUR SAFETY and PREVENTING PROBLEMS.** The symbols below are used to help you recognize this information.

⚠ **DANGER:** Indicates an imminently hazardous situation which, if not avoided, will result in death or serious injury.

⚠ **WARNING:** Indicates a potentially hazardous situation which, if not avoided, could result in death or serious injury.

⚠ **CAUTION:** Indicates a potentially hazardous situation which, if not avoided, may result in minor or moderate injury.

NOTICE: Used without the safety alert symbol indicates potentially hazardous situation which, if not avoided, may result in property damage.

General Safety Rules

⚠**WARNING: Read all safety warnings and all instructions.** *Failure to follow the warnings and instructions may result in electric shock, fire and/or serious injury.*

SAVE ALL WARNINGS AND INSTRUCTIONS FOR FUTURE REFERENCE

The term "power tool" in the warnings refers to your mains-operated (corded) power tool or battery-operated (cordless) power tool.

1) WORK AREA SAFETY

a) Keep work area clean and well lit. *Cluttered or dark areas invite accidents.*

b) Do not operate power tools in explosive atmospheres, such as in the presence of flammable liquids, gases or dust. *Power tools create sparks which may ignite the dust or fumes*.

c) Keep children and bystanders away while operating a power tool. *Distractions can cause you to lose control.*

2) ELECTRICAL SAFETY

a) Power tool plugs must match the outlet. Never modify the plug in any way. Do not use any adapter plugs with earthed (grounded) power tools. *Unmodified plugs and matching outlets will reduce risk of electric shock.*

b) Avoid body contact with earthed or grounded surfaces such as pipes, radiators, ranges and refrigerators. *There is an increased risk of electric shock if your body is earthed or grounded.*

c) Do not expose power tools to rain or wet conditions. *Water entering a power tool will increase the risk of electric shock.*

d) Do not abuse the cord. Never use the cord for carrying, pulling or unplugging the power tool. Keep cord away from heat, oil, sharp edges or moving parts. *Damaged or entangled cords increase the risk of electric shock.*

e) When operating a power tool outdoors, use an extension cord suitable for outdoor use. *Use of a cord suitable for outdoor use reduces the risk of electric shock.*

f) If operating a power tool in a damp location is unavoidable, use a ground fault circuit interrupter (GFCI) protected supply. *Use of a GFCI reduces the risk of electric shock.*

3) PERSONAL SAFETY

a) Stay alert, watch what you are doing and use common sense when operating a power tool. Do not use a power tool while you are tired or under the influence of drugs, alcohol or medication. *A moment of inattention while operating power tools may result in serious personal injury.*

b) Use personal protective equipment. Always wear eye protection. *Protective equipment such as dust mask, nonskid safety shoes, hard hat, or hearing protection used for appropriate conditions will reduce personal* injuries.

c) Prevent unintentional starting. Ensure the switch is in the off position before connecting to power source and/ or battery pack, picking up or carrying the tool. *Carrying power tools with your finger on the switch or energizing power tools*

that have the switch on invites accidents.

d) Remove any adjusting key or wrench before turning the power tool on. *A wrench or a key left attached to a rotating part of the power tool may result in personal injury.*

e) Do not overreach. Keep proper footing and balance at all times. *This enables better control of the power tool in unexpected situations.*

f) Dress properly. Do not wear loose clothing or jewelry. Keep your hair, clothing and gloves away from moving parts. *Loose clothes, jewelry or long hair can be caught in moving parts.*

g) If devices are provided for the connection of dust extraction and collection facilities, ensure these are connected and properly used. *Use of dust collection can reduce dust-related hazards.*

4) POWER TOOL USE AND CARE

a) Do not force the power tool. Use the correct power tool for your application. *The correct power tool will do the job better and safer at the rate for which it was designed.*

b) Do not use the power tool if the switch does not turn it on and off. *Any power tool that cannot be controlled with the switch is dangerous and must be repaired*.

c) Disconnect the plug from the power source and/or the battery pack from the power tool before making any adjustments, changing accessories, or storing power tools. *Such preventive safety measures reduce the risk of starting the power tool accidentally.*

d) Store idle power tools out of the reach of children and do not allow persons unfamiliar with the power tool or these instructions to operate the power tool. *Power tools are dangerous in the hands of untrained users.*

e) Maintain power tools. Check for misalignment or binding of moving parts, breakage of parts and any other condition that may affect the power tool's operation. If damaged, have the power tool repaired before use. *Many accidents are caused by poorly maintained power tools.*

f) Keep cutting tools sharp and clean. *Properly maintained cutting tools with sharp cutting edges are less likely to bind and are easier to control.*

g) Use the power tool, accessories and tool bits, etc. in accordance with these instructions, taking into account the working conditions and the work to be performed. *Use of the power tool for operations different from those intended could result in a hazardous situation.*

5) BATTERY TOOL USE AND CARE

a) Recharge only with the charger specified by the manufacturer. *A charger that is suitable for one type of battery pack may create a risk of fire when used with another battery pack.*

b) Use power tools only with specifically designated battery packs. Use of any other battery packs may create a risk of injury and fire.

c) When battery pack is not in use, keep it away from other metal objects like paper clips, coins, keys, nails, screws, or other small metal objects that can make a connection from one terminal to another. *Shorting the battery terminals together may cause burns or a fire.*

d) Under abusive conditions, liquid may be ejected from the battery, avoid contact. If contact accidentally occurs, flush with water. If liquid contacts eyes, additionally seek medical help. *Liquid ejected from the battery may cause irritation or burns.*

6) SERVICE

a) Have your power tool serviced by a qualified repair person using only identical replacement parts. *This will ensure that the safety of the power tool is maintained.*

SPECIFIC SAFETY RULES

- **Hold power tool by insulated gripping surfaces, when performing an operation where fastener may contact hidden wiring.** *Fasteners contacting a "live" wire may make exposed metal parts of the power tool "live" and could give the operator an electric shock.*
- **Wear ear protectors with impact driver.** *Exposure to noise can cause hearing loss*.
- **Use clamps or another practical way to secure and support the work piece to a stable platform.** *Holding the work by hand or against your body leaves it unstable and may lead to loss of control.*

- **Keep your hair, clothing, and gloves away from air vents.** *Air vents often cover moving parts in which these items can be caught.*
- **Wear safety goggles or other eye protection.** *Hammering and drilling operations cause chips to fly. Flying particles can cause permanent eye damage.*
- **Bits, sockets and tools get hot during operation.** *Wear gloves when touching them.*
- **Do not operate this tool for long periods of time.** *Vibration caused by tool action may be harmful to your hands and arms. Use gloves to provide extra cushion and limit exposure by taking frequent rest periods.*
- **Wear appropriate personal hearing protection during use.** *Under some conditions and duration of use, noise from this product may contribute to hearing loss.*

⚠**WARNING:** *Impact wrenches are not torque wrenches. Do not use this tool for tightening fasteners to specified torques. An independent, calibrated torque measurement device such as a torque wrench should be used when under tightened or over tightened fasteners can lead to the failure of the joint.*

⚠**WARNING:** ***ALWAYS*** *use safety glasses. Everyday eyeglasses are NOT safety glasses. Also use face or dust mask if drilling operation is dusty. ALWAYS WEAR CERTIFIED SAFETY EQUIPMENT:*

- *ANSI Z87.1 eye protection (CAN/CPA Z94.3),*
- *ANSI S12.6 (S3.19) hearing protection,*
- *NOSH/OSHA respiratory protection.*

⚠**WARNING:** *Some dust created by power sanding, sawing, grinding, drilling, and other construction activities contains chemicals known to the state of California to cause cancer, birth defects or other reproductive harm. Some examples of these chemicals are:*

- *lead from lead-based paints,*
- *crystalline silica from bricks and cement and other masonry products, and*
- *arsenic and chromium from chemically-treated lumber.*

Your risk from these exposures varies, depending on how often you do this type of work. To reduce your exposure to these chemicals: work in a well ventilated area, and work with approved safety equipment, such as those dust masks that are specially designed to filter out microscopic particles.

- **Avoid prolonged contact with dust from power sanding, sawing, grinding, drilling, and other construction activities. Wear protective clothing and wash exposed areas with soap and water.** *Allowing dust to get into your mouth, eyes, or lay on the skin may promote absorption of harmful chemicals.*

⚠**WARNING: Use of this tool can generate and/or disperse dust, which may cause serious and permanent respiratory or other injury.** *Always use NOSH/OSHA approved respiratory protection appropriate for the dust exposure. Direct particles away from face and body.*

Symbols

- The label on your tool may include the following symbols. The symbols and their definitions are as follows:

V.....volts	*A.....amperes*
Hz.....hertz	*W.....watts*
min.....minutes	∿ *or AC.....alternating current*
⎓ *or DC...direct current*	n_o *.....no load speed*
Ⓘ *.....Class I Construction (grounded)*	⏚ *.....earthing terminal*
⧈ *.....Class II Construction (double insulated)*	⚠ *.....safety alert symbol*
	.../min or rpm...revolutions or reciprocation per minute
IPM.....impacts per minute	*BPM..... beats per minute*
.....Read instruction manual before use	*.....Use proper respiratory protection*
.....Use proper eye protection	*.....Use proper hearing protection*

- When using an extension cord, be sure to use one heavy enough to carry the current your product will draw. An undersized cord will cause a drop in line voltage resulting in loss of power and overheating. The following table shows the correct size to use

depending on cord length and nameplate ampere rating. If in doubt, use the next heavier gage. The smaller the gage number, the heavier the cord.

Recommended Minimum Wire Size for Extension Cords

Total Length of Cord						
25 ft.	50 ft.	75 ft.	100 ft.	125 ft.	150 ft.	175 ft.
7.6 m	15.2 m	22.9 m	30.5 m	38.1 m	45.7 m	53.3 m
Wire Size AWG						
18	18	16	16	14	14	12

IMPORTANT SAFETY INSTRUCTIONS FOR BATTERY CHARGERS

SAVE THESE INSTRUCTIONS: This manual contains important safety instructions for battery chargers.

⚠**WARNING:** Before using charger, read all instructions and cautionary markings on charger, battery pack, and product using battery pack.

- **Shock hazard.** Do not allow any liquid to get inside charger.
- **Burn hazard.** To reduce the risk of injury, charge only designated ***PORTER-CABLE*** batteries. Other types of batteries may burst causing personal injury and damage.
- Under certain conditions, with the charger plugged in to the power supply, the charger can be shorted by foreign material. Foreign materials of a conductive nature such as, but not limited to, steel wool, aluminum foil, or any buildup of metallic particles should be kept away from charger cavities. Always unplug the charger from the power supply when there is no battery pack in the cavity. Unplug charger before attempting to clean.
- **DO NOT attempt to charge the battery pack with any chargers other than the ones in this manual.** *The charger and battery pack are specifically designed to work together.*
- **These chargers are not intended for any uses other than charging designated *PORTER-CABLE* rechargeable batteries.** *Any other uses may result in risk of fire, electric shock or electrocution.*
- **Do not expose charger to rain or snow.**
- **Pull by plug rather than cord when disconnecting charger.** *This will reduce risk of damage to electric plug and cord.*
- **Make sure that cord is located so that it will not be stepped on, tripped over, or otherwise subjected to damage or stress.**
- **Do not use an extension cord unless it is absolutely necessary.** *Use of improper extension cord could result in risk of fire, electric shock, or electrocution.*
- **An extension cord must have adequate wire size (AWG or American Wire Gauge) for safety.** *The smaller the gauge number of the wire, the greater the capacity of the cable, that is 16 gauge has more capacity than 18 gauge. When using more than one extension to make up the total length, be sure each individual extension contains at least the minimum wire size.*
- **Do not place any object on top of charger or place the charger on a soft surface that might block the ventilation slots and result in excessive internal heat. Place the charger in a position away from any heat source.** *The charger is ventilated through slots in the top and the bottom of the housing.*
- **Do not operate charger with damaged cord or plug —** *have them replaced immediately.*
- **Do not operate charger if it has received a sharp blow, been dropped, or otherwise damaged in any way.** *Take it to an authorized service center.*
- **Do not disassemble charger;** *take it to an authorized service center when service or repair is required. Incorrect reassembly may result in a risk of electric shock, electrocution or fire.*
- **Disconnect the charger from the outlet before attempting any cleaning.** *This will reduce the risk of electric shock. Removing the battery pack will not reduce this risk.*
- **NEVER attempt to connect 2 chargers together.**
- **The charger is designed to operate on standard household electrical power (120 Volts). Do not attempt to use it on any other voltage.**

SAVE THESE INSTRUCTIONS

IMPORTANT SAFETY INSTRUCTIONS FOR BATTERY PACKS

⚠**WARNING:** *For safe operation, read this manual and manuals originally supplied with tool before using the charger.*

The battery pack is not fully charged out of the carton. Before using the battery pack and charger, read the safety instructions below. Then follow charging procedures outlined.

READ ALL INSTRUCTIONS

- **Do not incinerate the battery pack even if it is severely damaged or is completely worn out.** *The battery pack can explode in a fire. Toxic fumes and materials are created when LI-ION battery packs are burned.*
- **Do not charge or use battery in explosive atmospheres, such as in the presence of flammable liquids, gases or dust.** *Inserting or removing the battery from the charger may ignite the dust or fumes.*
- **If battery contents come into contact with the skin, immediately wash area with mild soap and water.** *If battery liquid gets into the eye, rinse water over the open eye for 15 minutes or until irritation ceases. If medical attention is needed, the battery electrolyte for Li-ion batteries is composed of a mixture of liquid organic carbonates and lithium salts.*
- **Contents of opened battery cells may cause respiratory irritation.** *Provide fresh air. If symptoms persists, seek medical attention.*

⚠**WARNING:** ***Burn hazard.*** *Battery liquid may be flammable if exposed to spark or flame.*

- *Charge the battery packs only in* **PORTER-CABLE** *chargers.*
- **DO NOT splash or immerse in water or other liquids.** *This may cause premature cell failure.*
- **Do not store or use the tool and battery pack in locations where the temperature may reach or exceed 105°F (40C°) (such as outside sheds or metal buildings in summer).**

⚠**WARNING:** *Never attempt to open the battery pack for any reason. If battery pack case is cracked or damaged, do not insert into charger. Do not crush, drop or damage battery pack. Do not use a battery pack or charger that has received a sharp blow, been dropped, run over or damaged in any way (i.e., pierced with a nail, hit with a hammer, stepped on). Damaged battery packs should be returned to service center for recycling.*

⚠**WARNING:** **Fire hazard. Do not store or carry battery so that metal objects can contact exposed battery terminals.** *For example, do not place battery in aprons, pockets, tool boxes, product kit boxes, drawers, etc., with loose nails, screws, keys, etc.* **Transporting batteries can possibly cause fires if the battery terminals inadvertently come in contact with conductive materials such as keys, coins, hand tools and the like.** *The US Department of Transportation Hazardous Material Regulations (HMR) actually prohibit transporting batteries in commerce or on airplanes (i.e., packed in suitcases and carry-on luggage) UNLESS they are properly protected from short circuits. So when transporting individual batteries, make sure that the battery terminals are protected and well insulated from materials that could contact them and cause a short circuit.* ***NOTE: LI-ION batteries should not be put in checked baggage.***

FUNCTIONAL DESCRIPTION

Figure A

1. Trigger Switch
2. Forward/Reverse Button
3. Chuck Collar
4. Hex Quick-Release Chuck
5. Battery
6. Battery Release Button
7. LED Work Light
8. Bit Tip Holder

This product uses the batteries and chargers listed below.
20V Max* Lithium-Ion Batteries: PCC680L, PCC681L, PCC685L 20V Max* Lithium-Ion Chargers: PCC690L, PCC691L, PCC695L


A
3
8
PORTER CABLE
4
2
7
1
20V LITHIUM
6
5
20V LITHIUM


D
impact
2
1

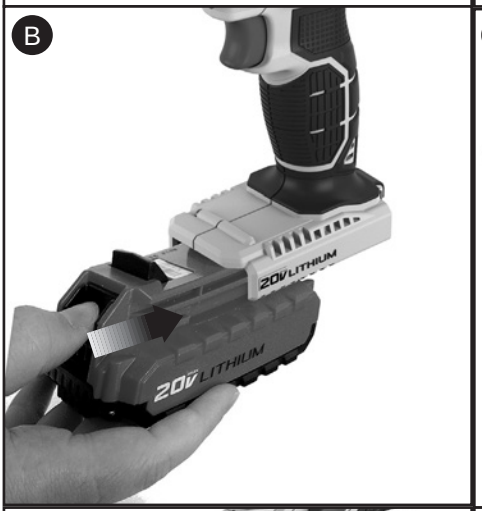
B
20V LITHIUM
20V LITHIUM

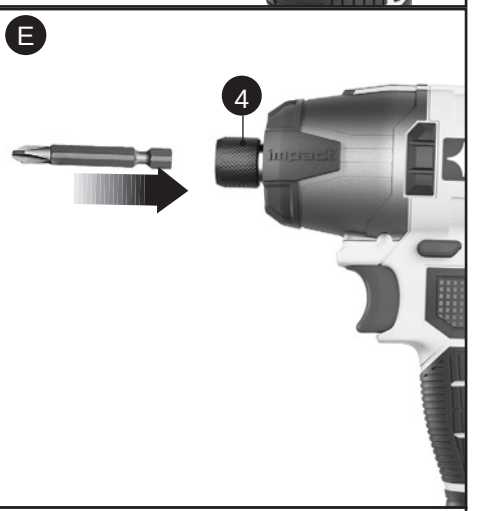
E
4
impact


C
20V LITHIUM

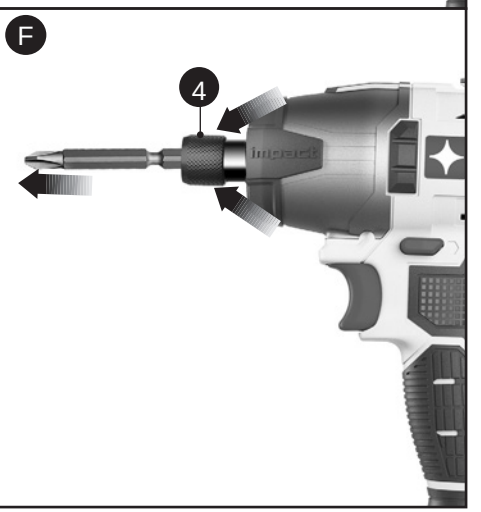
F
4
impact

STORAGE RECOMMENDATIONS

1. The best storage place is one that is cool and dry away from direct sunlight and excess heat or cold.
2. Long storage will not harm the battery pack or charger.

CHARGING PROCEDURE

PORTER-CABLE chargers are designed to charge **PORTER-CABLE** battery packs. Charge times are: PCC690L in 35-100 mins., PCC691L in 65-200 mins. and PCC695L in 160-300 mins. depending on the pack being charged.

1. Plug the charger into an appropriate outlet before inserting the battery pack.
2. Insert the battery pack into the charger.



3. The LED will flash indicating that the battery is being charged.



4. The completion of charge is indicated by the LED remaining on continuously. The pack is fully charged and may be used at this time or left on the charger.

CHARGER DIAGNOSTICS

This charger is designed to detect certain problems that can arise with the battery packs or the power source. Problems are indicated by one LED flashing in different patterns.

BAD BATTERY



The charger can detect a weak or damaged battery. The LED flashes in the pattern indicated on the label. If you see this bad battery blink pattern, do not continue to charge the battery. Return it to a service center or a collection site for recycling.

HOT/COLD PACK DELAY



When the charger detects a battery that is excessively hot or excessively cold, it automatically starts a Hot/Cold Pack Delay, suspending charging until the battery has normalized. After this happens, the charger automatically switches to the Pack Charging mode. This feature ensures maximum battery life. The light flashes in the pattern indicated on the label.

PROBLEM POWER LINE



When the charger is used with some portable power sources such as generators or sources that convert DC to AC, the charger may temporarily suspend operation. The LED flashes in the pattern indicated on the label. This indicates that the power source is out of limits.

LEAVING THE BATTERY IN THE CHARGER

The charger and battery pack can be left connected with the LED glowing indefinitely. The charger will keep the battery pack fresh and fully charged. This charger features an automatic tune-up mode which equals or balances the individual cells in the battery pack to allow it to function at peak capacity. Battery packs should be tuned up weekly or whenever the battery no longer delivers the same amount of work. To use the automatic tune-up mode, place the battery pack in the charger and leave it for at least 8 hours.

IMPORTANT CHARGING NOTES

1. Longest life and best performance can be obtained if the battery pack is charged when the air temperature is between 65°F and 75°F (18°- 24°C). DO NOT charge the battery pack in an air temperature below +40°F (+4.5°C), or above +105°F (+40.5°C). This is important and will prevent serious damage to the battery pack.
2. The charger and battery pack may become warm to touch while charging. This is a normal condition, and does not indicate a problem. To facilitate the cooling of the battery pack after use, avoid placing the charger or battery pack in a warm environment such as in a metal shed, or an uninsulated trailer.
3. If the battery pack does not charge properly:
   a. Check current at receptacle by plugging in a lamp or other appliance
   b. Check to see if receptacle is connected to a light switch which turns power off when you turn out the lights.
   c. Move charger and battery pack to a location where the surrounding air temperature is approximately 65°F - 75°F (18°- 24°C).
   d. If charging problems persist, take the tool, battery pack and charger to your local service center.
4. The battery pack should be recharged when it fails to produce sufficient power on jobs which were easily done previously. DO NOT CONTINUE to use under these conditions. Follow the charging procedure. You may also charge a partially used pack whenever you desire with no adverse affect on the battery pack.

OPERATING INSTRUCTIONS

INSTALLING AND REMOVING THE BATTERY PACK FROM THE TOOL

⚠**CAUTION:** *Make certain the lock-off button is engaged to prevent switch actuation before removing or installing battery.*

TO INSTALL BATTERY PACK: Insert battery pack (5) firmly into tool until an audible click is heard as shown in **Figure B**. Ensure battery pack is fully seated and fully latched into position.

TO REMOVE BATTERY PACK: Depress the battery release button (6) as shown in **Figure C** and pull battery pack out of tool.

VARIABLE SPEED TRIGGER SWITCH- FIGURE D

To turn the tool on, squeeze the trigger switch (1). To turn the tool off, release the trigger switch. Your tool is equipped with a brake. The chuck will stop as soon as the trigger switch is fully released. The variable speed switch enables you to select the best speed for a particular application. The more you squeeze the trigger, the faster the tool will operate. Use lower speeds for starting holes without a center punch, drilling in metals or plastics, or driving screws. For maximum tool life, use variable speed only for starting holes or fasteners.

NOTE: Continuous use in variable speed range is not recommended. It may damage the switch and should be avoided.

FORWARD/REVERSE CONTROL BUTTON- FIGURE D

A forward/reverse control button (2) determines the rotational direction of the tool and also serves as a lock off button. To select forward rotation, release the trigger switch and depress the forward/reverse control button on the right side of the tool. To select reverse, depress the forward/reverse control button on the left side of the tool. The center position of the control button locks the tool in the OFF position. When changing the position of the control button, be sure the trigger is released.

NOTE: The first time the tool is run after changing the direction of rotation, you may hear a click on start up. This and the impacting noise that the tool makes are normal and do not indicate a problem.

QUICK RELEASE CHUCK- FIGURE E AND F

NOTE: The chuck accepts 1/4 inch (6.35 mm) hex accessories only.
Remove battery pack before changing accessories.

TO INSTALL AN ACCESSORY, firmly insert the accessory completely into the quick release chuck (4) until an audible click is heard and verify the accessory is locked in place by tugging on it.

TO REMOVE AN ACCESSORY, pull the chuck collar (3) away from the front of the tool, remove the accessory and release the collar.
NOTE: The quick release chuck is spring-loaded. The accessory will be ejected when the chuck collar is pulled forward.

LED WORK LIGHT

When impact driver is activated by pulling the trigger switch (1), the integrated LED work light (7) will automatically illuminate the work area. **NOTE:** The work light is for lighting the immediate work surface and is not intended to be used as a flashlight.

BIT TIP STORAGE

A bit storage slot (8) is built into the top of the tool.

TROUBLESHOOTING

Problem	Possible Cause	Possible Solution
• Unit will not start.	• Battery pack not installed properly.	• Check battery pack installation.
	• Battery pack not charged.	• Check battery pack charging requirements.
• Unit starts immediately upon inserting battery.	• The switch has been left in the “on” position.	• The switch must be moved to “off” to prevent the tool from immediately starting when battery is inserted
• Battery pack will not charge.	• Battery pack not inserted into charger.	• Insert battery pack into charger until LED lights.
	• Charger not plugged tin.	• Plug charger into a working outlet. Refer to “Important Charging Notes” for more details.
	• Surrounding air temperature too hot or too cold.	• Move charger and battery pack to a surrounding air temperature of above 40 degrees F (4,5°C) or below 105 degrees F (+40,5°C).
• Unit shuts off abruptly.	• Battery pack has reached its maximum thermal limit.	• Allow battery pack to cool down.
	• Out of charge. (**To maximize the life of the battery pack it is designed to shutoff abruptly when the charge is depleted.**)	• Place on charger and allow to charge.