RCR-20

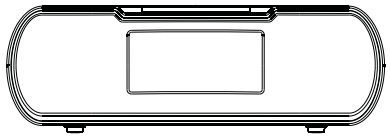

GB

Version 1

The Bluetooth® word mark and logos are registered trademarks owned by Bluetooth SIG, Inc. and any use of such marks by SANGEAN ELECTRONICS INC. is under license.

IMPORTANT SAFETY INSTRUCTIONS

For United States:

Cautions to the user

The changes or modifications not expressly approved by the party responsible for compliance could void the user's authority to operate the equipment.

RF exposure statements

IMPORTANT NOTE:

To comply with the FCC RF exposure compliance requirements, the antenna(s) used for this transmitter must be installed to provide a separation distance of at least 20cm (8 inches) from all persons and must not be co-located or operating in conjunction with any other antenna or transmitter. No change to the antenna or the device is permitted. Any change to the antenna or the device could result in the device exceeding the RF exposure requirements and void user's authority to operate the device.

Note:

This equipment has been tested and found to comply with the limits for a Class B digital device, pursuant to part 15 of the FCC Rules.

These limits are designed to provide reasonable protection against harmful interference in a residential installation. This equipment generates, uses and can radiate radio frequency energy and, if not installed and used in accordance with the instructions, may cause harmful interference to radio communications. However, there is no guaranty that interference will not occur in a particular installation. If this equipment does cause harmful interference to radio or television reception, which can be determined by turning the equipment off and on, the user is encouraged to try to correct the interference by one or more of the following measures:

- Reorient or relocate the receiving antenna.
- Increase the separation between the equipment and receiver.
- Connect the equipment into an outlet on a circuit different from that to which the receiver is connected.
- Consult the dealer or an experienced radio/TV technician for help.

CAUTION: These servicing instructions are for use by qualified service personnel only. To reduce the risk of the electric shock, do not perform any servicing other than that contained in the operating instructions unless you are qualified to so.

GB

VERY IMPORTANT PLEASE READ

Sangean suggest that you keep your AC Adapter at least 12 inches away from the radio while listening to the AM Band.

Your Sangean Radio is powered by an AC adapter which is a "switching" or "switch-mode" type. The DOE (Department Of Energy) has a Federal mandate; requiring all manufactures to use this type of power supply. This newer power saving technology has the unfortunate side effect of causing interference to the AM radio band.

Therefore, we recommend that customers keep at least a 1 foot distance between the AC adapter and the radio. This interference will not affect the FM Band. If you have any questions please contact customer service at (888)726-4326, (562)941-9900 or service@sangean.com

If an AC adapter isn't included in this model and if you wish to purchase an AC Adapter separately, please refer to the specifications for the AC Adapter stated on the final page of the manual, or please contact Sangean for the correct AC Adapter and specifications.

To learn more about the DOE mandate please visit http://www1.eere.energy. gov/buildings/appliance_standards/product.aspx/productid/23

Please note not all AC adapters are alike.

The AC adapter that is included with this radio is designed to be used exclusively with this device. Do not use an AC adapter that differs from the specifications on the AC adapter that is included.

If an AC adapter is NOT included with your radio and in order not to damage the unit and void your warranty, specifications for the AC Adapter are stated on the final page of the manual, or please contact Sangean for the correct AC Adapter and specifications. For customers in the US and Canada, please call 888-726-4326. For all other areas, please contact us via info@sangean.com.tw.

Do not use an AC adapter that does not meet the correct specifications.

Cautions

Do not allow this radio to be exposed to water, steam or sand. Do not leave your radio where excessive heat could cause damage such as in a parked car where the heat from the sun can build up even though the outside temperature may not seem too high.

- Your radio should not be exposed to dripping or splashing water and that no objects filled with liquids, such as vases, shall be placed on the radio.
- It is recommended to operate the product such that there is a minimum distance (4” recommended) to adjacent objects in order to ensure good ventilation.
- The ventilation of the product should not be restricted by covering it or its ventilation openings with items such as newspapers, tablecloths, curtains etc.
- No open flame sources such as lighted candles should be placed on the product.
- It is recommended to avoid using or storing the product at extreme temperatures. Avoid leaving the unit in cars, on window sills or in direct sunlight etc.

Controls

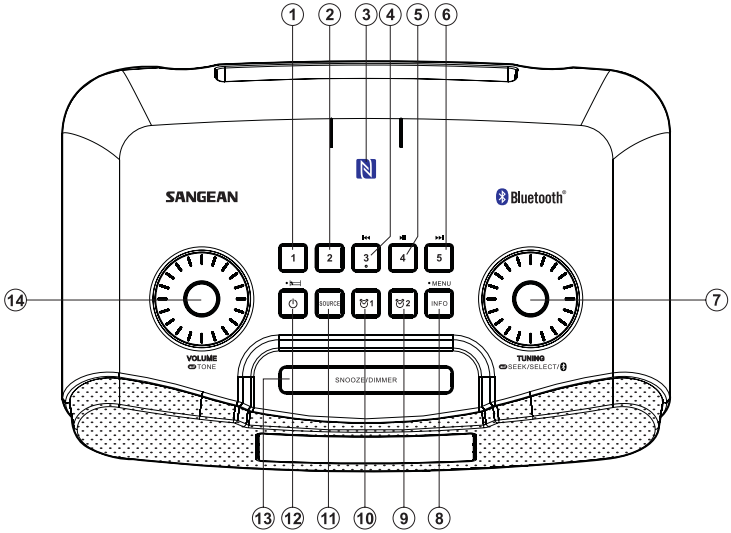

1. Preset 1
2. Preset 2
3. NFC detection area
4. Preset 3/ Rewind button
5. Preset 4/ Play/Pause button
6. Preset 5/Fast-forward button
7. Tuning control button/Seek/ Select/Bluetooth pairing button
8. Info/Menu button
9. Alarm 2
10. Alarm 1
11. Source button
12. Standby (Main Power) button/Sleep timer button
13. Snooze/dimmer button
14. Volume/Tone control

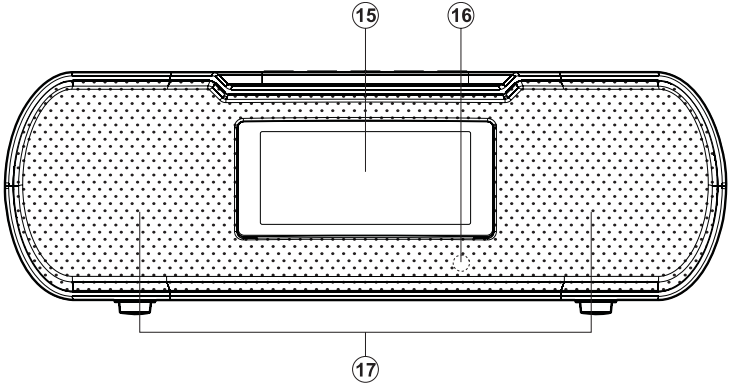

15. LCD display
16. Remote control sensor
17. Speaker

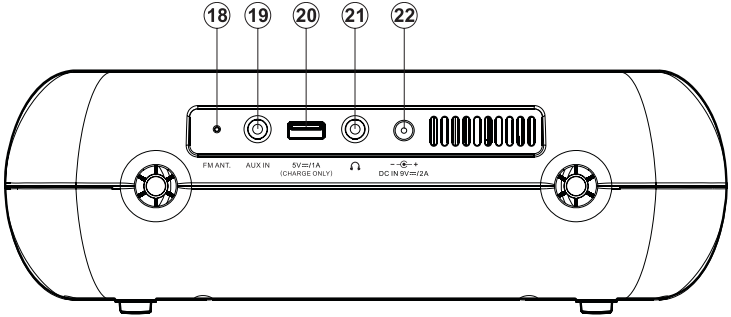

18. FM antenna
19. Auxiliary input socket
20. USB socket for iPhone/Smartphone charging
21. Headphone socket
22. DC IN socket

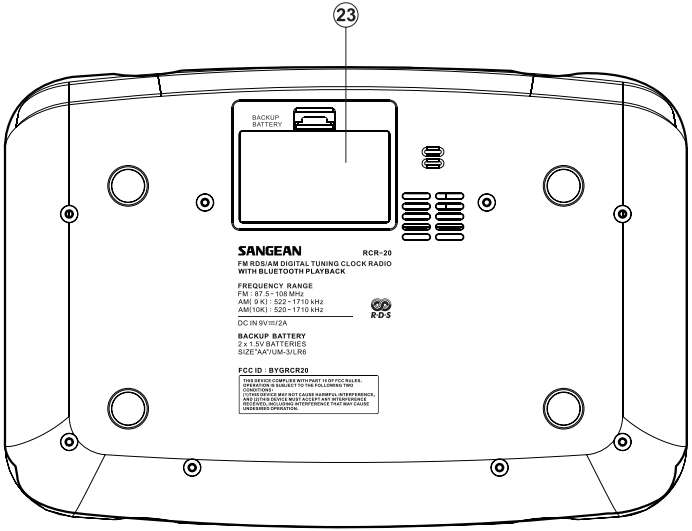

23. Backup battery compartment

Display icons

A. PM indicator
B. Time display
C. Sleep timer icon
D. Alarm 1 icon
E. Alarm 2 icon
F. Frequency/information for station display
G. RDS icon
H. Backup battery capacity indicator

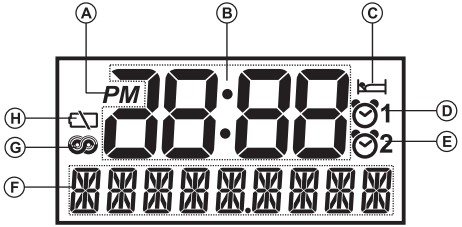

GB

Remote control

a. Standby button (Main Power)
b. Mute button
c. Preset button
d. Menu button
e. Tuning up button
f . Seek down button/Rewind button
g. Alarm 1 button
h. Treble up button
i . Bass up button
j . Bass down button
k. Treble down button
l . Snooze button/Dimmer button
m. Loudness button
n. Mono/Stereo button
o. Bluetooth pairing button
p. Tuning down button
q. Alarm 2 button
r. Seek up button/Fast-forward button
s. Select button/Play/Pause button
t. Info button
u. Volume button
v. Source button

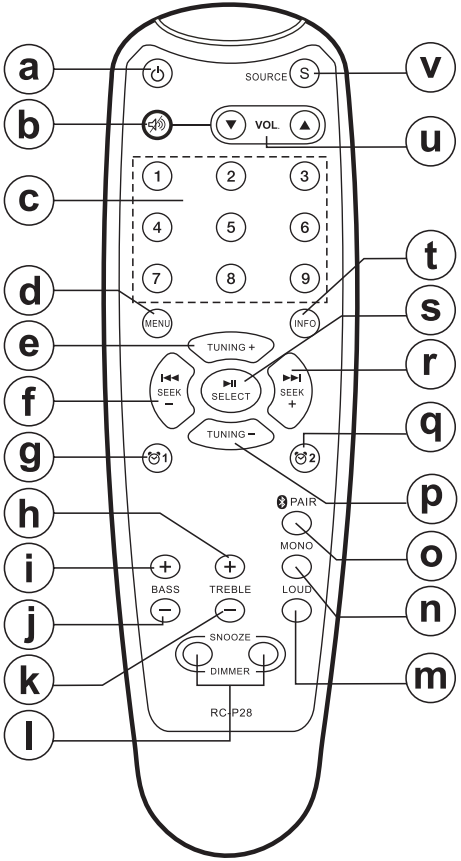

Note: For the sake of clarity, the instructions for the use of the controls throughout this instruction manual show the buttons on the radio. The buttons on the remote control can be used if you prefer.

Note: The operations described below for the radio are the same as the operations for the remote control.

1. Rotating the Tuning control knob of the radio is the same as pressing the Tuning Up or Down buttons on the remote control.
2. Pressing the Tuning control button of the radio is the same as pressing and releasing the Select button on the remote control.
3. Rotating the Volume Knob of the radio is the same as pressing the Volume Up or Down buttons on the remote control.
4. Pressing and holding the Info/Menu button of the radio is the same as pressing and releasing the Menu button on the remote control.

Note: If the remote is not to be used for an extended period of time it is recommended that the batteries are removed.

IMPORTANT:

Batteries should not be exposed to excessive heat such as sunshine, fire or the like. After use, disposable batteries should be taken to a suitable recycling center. On no account should batteries be disposed of by incineration. Do not leave batteries within reach of young children, they can be a choking hazard.

Power your radio

Using the AC power adaptor

The AC power adaptor required for this unit should be 9 volts DC at 2A center pin positive.

Insert the adaptor plug into the DC socket on the rear of the radio.

Plug the adaptor into a standard AC outlet. If no time is displayed, the screen will show “- : - -”.

Whenever the adaptor is used, the batteries are automatically disconnected. The AC adaptor should be disconnected from the AC outlet when not in use for long periods of time.

IMPORTANT:

The AC adaptor is used as the means of connecting the radio to your power supply. The AC Adapter used for the radio must remain accessible during normal use. In order to disconnect the radio from the power supply completely, the AC Adaptor should be removed from the power supply outlet completely.

Backup battery operation

1. Remove the battery cover on the bottom of the unit.
2. Insert two UM-3 (AA size) batteries into the spaces in the compartment.
3. Take care to ensure all batteries are inserted with correct polarity as shown inside the compartment. Replace the battery cover.
4. When the low battery capacity indicator shows on the display please replace the batteries immediately.
5. When the radio is used as a clock radio or as an alarm, always keep the batteries inserted.

Note:

Batteries will only back up preset memories and clock functions during power a outage and is not intended for normal radio operation.

Note:

Do not use a mix of rechargeable and non-rechargeable batteries.

Do not use batteries that have a different mAh capacity.

Do not use damaged, deformed or leaking batteries.

Operating your radio – Search tuning AM/FM

GB

1. Press the Standby (main power) button to switch on your radio.
2. Press the Source button as needed until the AM or FM band is selected.
3. To scan up in frequency, first rotate the Tuning control knob in a clockwise direction and then press the Tuning control button. Your radio will scan in an upwards direction (low frequency to high frequency) and stop automatically when it finds a station of sufficient strength. To scan down in frequency, first rotate the Tuning control knob in a anti-clockwise direction and then press the Tuning control button. Your radio will scan in a downwards direction and stop automatically when it finds a station of sufficient strength.
4. After a few seconds the display will update. The display will show the frequency of the signal found. If the signal is strong enough and there is RDS data present then the radio will display the station name.
5. When the end of the waveband is reached your radio will recommence tuning from the opposite end of the waveband.
6. Use the Volume control to adjust the sound level as required.
7. To switch off your radio press the Standby (main power) button.

Manual tuning – AM/FM

1. Press the Standby (main power) button to switch on your radio.
2. Press and release the Source button to select AM or FM radio mode.
3. Rotate the Tuning control knob to tune to a station. The FM frequency will change in steps of 100kHz/50kHz and AM frequency will change in steps of 10kHz/9kHz.
4. When the end of the waveband is reached your radio will recommence tuning from the opposite end of the frequency band.
5. Use the Volume control to adjust the sound level as required.

Note:

If your radio has any interference in the AM band because of its AC adaptor, please move your radio away from the AC adaptor at least 12”.

Display modes – FM

Your radio has a range of display options for FM radio mode.

1. Repeatedly press and release the Info/Menu button to view the RDS information of the station you are listening to.

a. Station name	Displays the name of the station being listened to.
b. Program type	Displays the type of station being listened to such as Pop, Classic, News, etc.
c. Radio text	Displays radio text messages such as new items etc.
d. Stereo/Mono	Displays the radio broadcasting is in Stereo or Mono mode.
e. Year/Day	Displays the year and day of the week according to the date setting of your radio.
f . Date/Day	Displays the date and day of the week according to the date setting of your radio.
g. Frequency	Displays the frequency of the FM station your listening to.

Note: If no RDS information is available, the radio will be unable to display the station name, scrolling text and program type information.

FM stereo (auto)/mono

If the FM radio station being listened to has a weak signal some hiss may be audible. It is possible to reduce this hiss by forcing the radio to play the station in mono rather than stereo.

1. Press and release the Standby (main power) button to switch on your radio.
2. Press the Source button as needed to select the FM radio mode display and tune to the required FM station as previously described.
3. Press and hold the Info/Menu button until you hear a beep (then release the button) to enter the menu setting.
4. Rotate the Tuning control knob until the FM AUTO/MONO setting shows on the display. If the setting is Auto press the Tuning control button and rotate the Tuning control knob to switch to Mono mode to reduce the hiss. Press and release the Tuning control button to confirm the setting.
5. To return to Auto (Stereo) mode, press and hold the Info/Menu button to enter the menu setting. Rotate the Tuning control knob until the "FM MONO" shows on the display. Press and release the Tuning control button and rotate the Tuning control knob to select AUTO. Press and release the Tuning control button to confirm the setting.

Presetting stations in AM/FM mode

There are 5 preset stations each for AM and FM radio. They are used in the same way for each frequency band.(Please note that 9 memory presets for each band can be accessed via remote control.)

1. Press the Standby (main power) button to switch on your radio.
2. Press the Source button to select the desired frequency band. Tune to the required radio station as previously described.
3. Press and hold the required Preset button until the display shows “P4” for example after the frequency. The station will be stored using the preset number. Repeat this procedure for the remaining presets as you wish.
4. Preset stations which have already been stored may be overwritten by following the above procedure if required.

Recalling a preset in AM/FM mode

1. Press the Standby (main power) button to switch on your radio.
2. Select the required frequency band by pressing the Source button.
3. Momentarily press the required Preset button to have your radio tune to one of the stations stored in the preset memory.

Note: The display will show “EMPTY” if no station has been stored to that preset.

Listening music via Bluetooth streaming

You need to pair your Bluetooth device with your RCR-20 before you can auto-link to play/stream Bluetooth music through your RCR-20. Paring creates a ‘bond’ so two devices can recognize each other.

Pairing and playing your Bluetooth device for the first time

1. Press the Source button to select Bluetooth (BT) function. The “BT PAIRING” will show on the display and “PAIRING” will flash.
2. Activate Bluetooth on your device according to the device’s user manual to link to the radio. Locate the Bluetooth device list and select the device named ‘RCR-20’ (With some Smartphone’s that are equipped with earlier versions than BT2.1 Bluetooth device, you may need to input the pass code “0000”).
3. Once connected, there will be a confirmation tone sound and the display will be changed to show “BT LINKED”. You can simply select and play any music from your source device. The volume control can be adjusted from your source device, or directly from the radio.
4. Use the controls on your Bluetooth-enabled device or on the radio to play/pause and navigate tracks.

Note:

1) If 2 Bluetooth devices are pairing for the first time, both must search for your radio, it will show its availability on both devices. However, if one device links with this unit first, then the other Bluetooth device will not be found on the list.
2) If you take your source device out of range, the connection will be temporarily disconnected to your radio. Your radio will automatically reconnect if the source device is brought back in range. Be aware that during the period of disconnection, no other Bluetooth device can pair or link with your radio.
3) If ‘RCR-20’ shows in your Bluetooth device list but your device cannot connect with it, please delete the item from your list and pair the device with the radio again following the steps described previously.
4) The effective operation range between the system and the paired device is approximately 10 meters (30 feet). Any obstacle between the system and the device can reduce the operational range.
5) Bluetooth/NFC connectivity performance may vary depending on the connected Bluetooth devices. Please refer to the Bluetooth capabilities of your device before connecting to your radio. All features may not be supported on some paired Bluetooth devices.
6) With some mobile phones, making/receiving calls, text messages, e-mails or any other activities unrelated to audio streaming may mute the Bluetooth audio streaming or even temporarily disconnect from your device. Such behavior is a function of the connected device and does not indicate a fault with your RCR-20.

Playing audio files in Bluetooth mode

When you have successfully connected your radio with the chosen Bluetooth device you can start to play your music using the controls on your connected Bluetooth device.

1. Once playing has started adjust the volume to the required setting using the Volume control on your radio or on your enabled Bluetooth device.
2. Use the controls on your device to play/pause and navigate tracks. Alternatively, control the playback using Play/Pause (4), Next track (5), Previous track buttons (3) on the radio.
3. Press and hold the Fast-forward or Rewind button to move through the current track. Release the button when the desired point is reached.

Note:

Not all player applications or devices may respond to all of these controls.

Playing a previously-paired Bluetooth source device

The RCR-20 can memorize up to 8 paired Bluetooth source devices, when the memory exceeds this amount, the earliest paring device will be over written from the device.

If your Bluetooth source device already paired with the RCR-20 previously, the unit will memorize your Bluetooth Source device and will attempt to reconnect with a Bluetooth source device in the memory that was last connected. If the last connected Bluetooth source device is not available, the RCR-20 will try to connect to the second last Bluetooth source device.

Deleting Bluetooth paired device memory

1. Press the Source button as needed to select Bluetooth mode.
2. To clear the memory of all paired devices, press and hold the Bluetooth pairing button for more than 5 seconds until you hear a beep and the “CLEARING” will show on the display.

Disconnecting your Bluetooth device

Press and release the Bluetooth pairing button to disconnect with your Bluetooth device, you will hear a beep.

You can also press the Source button to select any mode other than Bluetooth mode or turn off Bluetooth on your Bluetooth source device to disable the connection.

If you disconnect the Bluetooth device when you are in Bluetooth mode, the “BT PAIRING” will show on the display, indicating Bluetooth is available again for pairing.

Pairing and playing your device via NFC

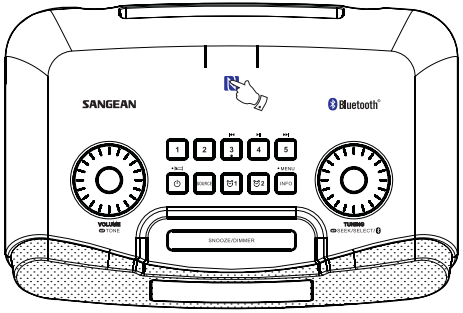

Your radio is equipped with wireless NFC (Near Field Communication) feature, allowing NFC-enabled devices to pair and play the music with your radio. For non-NFC devices, please refer to the above sections for standard Bluetooth pairing. Turn on the NFC feature on your device. Touch the NFC area of your playing device directly against the NFC tag marked on top of your radio.

1. Turn on your NFC feature on your device. (**Important:** Please make sure the screen of your playing device is on and unlocked to allow NFC to work.)
2. Touch the NFC area of your playing device against the NFC area marked on the top of your radio. The unit will enter automatic pairing mode. If you pair the unit for the first time, some NFC enabled devices will ask permission to link with the radio. Once paired with a device, 'Connecting RCR-20…' or a similar message is shown on your NFC-enabled device.
3. Use the controls on your device or on your radio to play/pause and navigate tracks.

Note:

1. NFC connectivity performance may vary depending on the connected Bluetooth device. Please refer to the Bluetooth capabilities of your device before connecting to your radio. All features may not be supported on some Bluetooth/NFC enabled devices.
2. The location of the NFC detection area is not the same on all devices. When connecting with other Bluetooth device s via NFC, refer to the User guide of the other device for more information.
3. Some metallic cases or covers for mobile phones may reduce the sensitivity of NFC. Make sure you remove it, before activating the NFC.

Disconnecting your NFC-enabled device

To disconnect your device, simply touch it again on the top panel of the radio. (**Important:** Please make sure the screen of your playing device is on and unlocked to allow NFC to work.)

Clock and Alarms

Setting the time format

The clock display used in stand-by mode and on the playing mode screens can be set to 12 or 24 hour format. The selected format is then also used when setting the alarms.

1. Press and hold the Info/Menu button to enter the menu setting.
2. Rotate the Tuning control knob until “CLOCK XXH” appears on the display, then press and release the Tuning control button to enter the setting and the setting of time format begins to flash.
3. Rotate the Tuning control knob to select either 12 or 24 hour format. Press and release the Tuning control button to confirm your choice of clock format. The display will then revert to the previous menu. If the 12 hour clock format is chosen, the radio will then use the 12 hour clock for the setting of alarms with a PM indicator.

Setting the date format

1. Press and hold the Info/Menu button to access the menu setting.
2. Rotate the Tuning control knob until a date (e.g. JAN 1 FRI) shows on the display. Press and release the Tuning control button to enter the date format setting.
3. Rotate the Tuning control knob to select the required date format. Press and release the Tuning control button to confirm your choice of date format. The display will then revert to the previous menu.

Setting the clock time and date

Your RCR-20 has two options to set up its clock time: FM Radio Data System (RDS) and Manual setting.

Manual setting

When choosing manual setting as the clock time setting of your radio, the Radio Data System (RDS) function will be disabled.

1. Press and hold the Info/Menu button to enter the menu setting.
2. Rotate the Tuning control knob until a clock symbol appears on the left side display, then press and release the Tuning control button to enter the setting. Rotate the Tuning control knob until “MANUAL” appears on the display, then press and release the Tuning control button to select the setting.
3. Rotate the Tuning control knob until “CLOCK ADJ” appears on the display. Press and release the Tuning control button to enter the setting.
4. The hour setting on the display will begin flashing. Rotate the Tuning control knob to select the desired hour, and press and release the Tuning control button to confirm the setting. Then rotate the Tuning control knob to select the desired minute, and press and release the Tuning control button to confirm the setting.
5. Rotate the Tuning control knob until “DATE ADJ” appears on the display. Press and release the Tuning control button to enter the setting.
6. Rotate the Tuning control knob to select the desired year, and press and release the Tuning control button to confirm the setting. Then rotate the Tuning control knob to select the desired month, and press and release the Tuning control button to confirm the setting. Then rotate the Tuning control knob to select the desired date. Press and release the Tuning control button to confirm the setting and the radio will beep once.

Radio Data System (RDS)

When you set the clock time using the RDS function, your radio will synchronize its clock time whenever it tunes to a radio station using RDS with CT signals.

1. When tuning to a station transmitting RDS data, press and hold the Info/Menu button to enter the menu setting.
2. Rotate the Tuning control knob until a clock symbol appears on the display. Press and release the Tuning control button to enter the setting.
3. Rotate the Tuning control knob until “RDS CT” appears on the display. Press and release the Tuning control button to confirm the setting. The clock time of the radio will set up automatically according to the RDS data received.
4. When the action is completed, the RDS icon will appear on the LCD display indicating the radio time is RDS clock time. The radio clock time will be valid for 2 days each time the radio time is synchronized with RDS CT.

Note:

1) If clock time from local RDS station is not correct, you should consider disabling the RDS CT function.
2) Please note that at times the RDS signal may broadcast the wrong time, this is the fault of the radio station and not your radio.

Setting the alarm clock

There are two alarms which can each be set to wake you to AM/FM radio, or buzzer alarm. The alarms may be set while the unit is off or while playing. Ensure that the time is set correctly before setting the alarms.

Note: If no buttons are pressed for 10 seconds, the radio will exit the alarm setup.

1. Before setting an alarm ensure the clock time is set. Press and hold any of the Alarm button for more than 3.5 seconds until the radio beeps. The Alarm 1 icon or Alarm 2 icon will flash on the display. You've now entered the alarm setting (e.g. Alarm 1 button to enter the alarm 1 setting).
2. The hour setting of alarm 1, for example, will begin to flash. Rotate the Tuning control knob to select the required alarm hour, and press and release the Tuning control button to confirm the setting. Rotate the Tuning control knob to select the required alarm minute, and press and release the Tuning control button to confirm the setting.
3. Then the display will show the frequency options for the alarm.
   The alarm options are as follows:
   ONCE – the alarm will sound once
   DAILY – the alarm will sound everyday
   WEEKDAY – the alarm will sound only on weekdays
   WEEKEND – the alarm will sound only at weekends
   Press and release the Tuning control button to confirm the setting.
4. Rotate the Tuning control knob to choose the required alarm type, and then press and release the Tuning control button to confirm the setting. The alarm can be set to BUZZER,FM or AM. When the BUZZER mode is selected, please go to step 5 to set alarm volume. When radio mode is selected, the radio frequency and the preset number on the display will begin to flash. Rotate the Tuning control knob to adjust the required radio frequency or the required preset number for the radio alarm, then press and release the Tuning control button to confirm the setting.
5. Rotate the Tuning control knob to choose the required sound level for the alarm. Press and release the Tuning control button to confirm the setting.
6. The alarm has now been set. Press and release the Tuning control button again, and the radio will revert to normal display. Active alarms are shown using the alarm indicator on the display.

Note:
Alarm radio can only be activated when the unit is powered by an AC adaptor. If not (i.e. your radio is disconnected from an AC adaptor, but inserted with back up batteries), buzzer alarm (with no Humane Waking System) will be activated instead.

7. To view the status of the alarm setting, press and release the Alarm 1 (or Alarm2) button. To quick change the OFF/DAILY (for example) status of the alarm, press and hold the corresponding alarm button (i.e. Alarm 1 or Alarm 2 button) for 2 seconds until you hear a beep, the “OFF” or “DAILY” (for example) will show on the display.

When the alarm sounds

When the buzzer alarm activates, the alarm will start softly and gradually increase in level. It will sound for 1 minute and silence for 1 minute in repetition for 60 minutes unless cancelled. The radio will sound non-stop at the selected time for up to 60 minutes for other alarm types.
When the radio alarm is activated, the alarm will go off in Humane Waking System. It will increase its volume from 0 to your set volume.
To deactivate a sounding alarm, press the Standby (main power) button to cancel a sounding alarm.

Disabling/cancelling alarms

To cancel the alarm setting before the alarm sounds, press and hold the corresponding alarm button (i.e. alarm 1 or alarm 2 button) until a beep sounds and “OFF” appears on the display. The alarm indicator will disappear from the screen and the chosen alarm will now be disabled.

Snooze

1. When the alarm sounds, press any button other than the Standby (main power) button will silence the alarm for 5 minutes. “SNOOZE” will appear on the display.
2. To adjust the silence time for the snooze timer, press and hold the Info/Menu button to enter the menu setting.
3. Rotate the Tuning control knob until “SNOOZE X” appears on the display, then press and release the Tuning control button to enter the setting. Rotate the Tuning control knob to adjust the silence time from 5, 10, 15 and 20 minutes for the snooze timer.
4. To cancel the snooze timer while the alarm is suspended, press and release the Standby (main power) button.

Sleep timer

Your radio can be set to turn off automatically after a preset time has elapsed. The Sleep Timer setting can be adjusted between 15, 30, 45, 60, 90 or 120 minutes.

1. Press and hold the Standby (main power) button to enter the Sleep Timer setting.“SLEEP XX” will show on the display.
2. Keep pressing the Standby (main power) button and the Sleep Timer options will start switching on the display. Stop until the required Sleep Timer setting appears on the display. The setting will be saved and the LCD will return to normal display.
3. Your radio will switch off automatically after the preset Sleep Timer has elapsed. The Sleep Timer icon will show on the display indicating an active Sleep Timer.
4. To cancel the Sleep Timer function before the preset time has elapsed, simply press and release the Standby (main power) button to turn the unit off manually.

Display & Audio setup

Dimmer control

The brightness of the display may be adjusted. If you use the unit in the bedroom, you may prefer a higher brightness level than the standard setting.

1. Press and release the Snooze/Dimmer button repeatedly to adjust the brightness level of the LCD display. The backlight level will change with 8 different illumination levels, you'll be able to see the effect of the change.
2. Stop when the desired backlight level is reached.

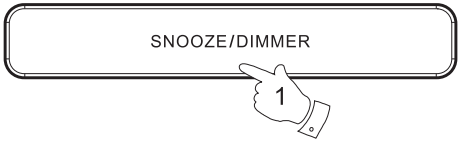

Tone control

You can adjust the bass and treble of the sound of your RCR-20 to enhance the tone while listening.

1. First ensure your radio is switched on. Press and release the Volume control button to enter the tone control setting.
2. The bass value will appear on the display. Rotate the Volume control knob to adjust between +5~-5, and press and release the Volume control button to confirm the setting.
3. Then the treble value will appear on the display. Rotate the Volume control knob to adjust between +5~-5, and press and release the Volume control button to confirm the setting.
4. You can also press the Bass up/down button and Treble up/down button on the Remote control to adjust the bass and treble of the sound.

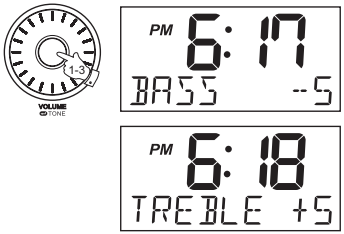

Loudness

You can get compensation on lower and higher frequency for your RCR-20 by adjusting the Loudness function.

1. Press and hold the Info/Menu button to enter the menu setting.
2. Rotate the Tuning control knob until LOUD ON/OFF appears on the display. Press and release the Tuning control button to enter the setting.
3. Rotate the Tuning control knob to choose ON to turn on the Loudness function, then press and release the Tuning control button to confirm the setting.
4. To turn off the Loudness function, select OFF and press and release the Tuning control button to confirm the setting.

Mute function

Press the Mute button on the remote control of your radio, it will mute the output from the loudspeakers.

1. Press the Mute button to mute the sound output.
2. Press the Mute button again or one of the Volume buttons to un-mute the sound output.

Auxiliary input socket

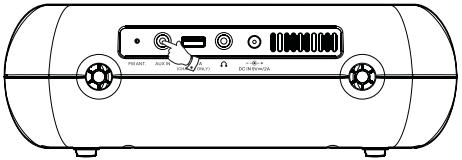

A 3.5mm stereo Auxiliary Input socket is provided on the rear of your radio to permit an audio signal to be fed into the unit from an external audio device such as iPod, MP3 or CD player.

1. Press the Standby (main power) button to switch on your radio.
2. Repeatedly press and release the SOURCE button until AUX IN is displayed.
3. Connect an external audio source (for example, iPod, MP3 or CD player) to the Auxiliary Input socket.
4. Adjust the volume setting on your iPod, MP3 or CD player to ensure an adequate signal level from the player, and then use the Volume control on the radio as needed for comfortable listening.

Headphone socket

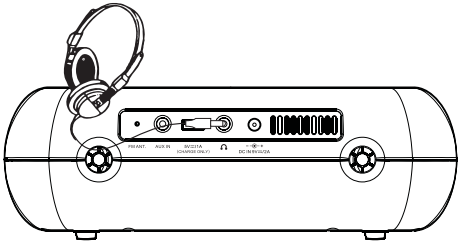

A 3.5mm Headphone socket located on the rear of your radio is provided for use with headphones. Inserting headphones will automatically mute the internal loudspeaker. Please be aware that the sensitivity of headphones can vary widely. We therefore recommend setting the volume to a low level before connecting headphones to the radio.

IMPORTANT:

Excessive sound pressure from earphones and headphones can cause hearing loss.

To prevent possible hearing damage, do not listen at high volume levels for long periods.

Software version/Setting tuning step/FM range setting

Software version

The software version display cannot be altered and is just for your reference.

1. Turn off the radio.
2. Press and hold the Source button until you hear a beep and the software version (e.g. VER XXX) is shown on the display.

Setting tuning step

1. After the software version is shown on the display, rotate the Tuning control knob until FM xkHZ or AM xkHZ appears on the display, and press the Tuning control button to enter FM or AM step setting. The "xkHZ" will flash on the display.
2. Rotate the Tuning control knob to select 50 kHz/100 kHz for FM radio, and 9 kHz/10 kHz for AM radio. Then press the Tuning control to confirm the setting.

Note:

The tuning steps for North America are FM: 100 kHz and AM: 10 kHz

The rest of the world is FM: 50 kHz and AM: 9 kHz

Note:

Change in the AM tuning step setting will result in the removal of AM presets stored in the radio, this is not the case for your FM tuning steps.

FM range setting

The FM Broadcasting Band tuning range can be different depending on where in the world you live. It may be necessary to adjust the FM range to allow the radio to work properly.

1. After the tuning step setting is completed, rotate the Tuning control knob until the FM frequency range shows on the display. Then press the Tuning control button to enter the FM range setting.
2. Rotate the Tuning control knob to select the desired FM range and press the Tuning control button to confirm the setting.
   The available FM range is as following:
   FM: 87.5-108 MHz (North America) (default) Your radio is pre-set with this tuning range, no adjustments are necessary if you live in North America.
   FM: 76-90 MHz (for Japan)
   FM: 64-108 MHz (for Eastern European countries and Russia)
   FM: 76-108 MHz (for some of China area and European countries)

USB socket for iPhone/Smartphone charging

Your radio has a USB socket which is intended only for charging an iPhone, smart phone or similar devices. Charge time may vary and in some cases may take longer to charge than when using the manufacturers charging unit supplied with the smart phone.

1. The radio can charge the iPhone, smart phone or similar devices when the radio is in power on or standby mode and in FM/AM radio mode, BT mode or AUX IN mode.
2. Connect your smart phone to the USB charging socket on the rear of your radio.
3. Your iPhone or smart phone will begin to charge.
4. Once your iPhone or smart phone has fully charged remove the USB cable.

Note:

Charging mobile phones (for example) or other devices may affect the listening quality while listening to the AM/FM band.

Important:

- The charger may not supply power to some USB devices.
- When not using or after charging, remove the USB cable.
- Do not connect power source to USB port. Otherwise there is a risk of fire. The USB port is only intended for charging lower voltage device.
- Do not insert a nail, wire, etc. into the USB power supply port. Otherwise a circuit short may cause smoke and fire.
- Do not connect this USB socket with your PC USB port, as it is highly possible that it may cause breakdown of the units.
- Never use the USB socket in rainy or moist conditions to prevent moisture from entering the radio.

System reset

If your radio fails to operate correctly, or some digits on the display are missing or incomplete carry out the following procedure.

1. When the radio is in power on or standby mode, press and hold the Info/Menu button until you hear a beep to enter the menu setting.
2. Rotate the Tuning control knob until “FACTORY” appears on the display. Press and release the Tuning control button, the “RESET NO” will appear on the display and “NO” will flash. Rotate the Tuning control knob to select “NO” or “YES”. If you do not wish to carry out a system reset, select “No” and then press the Tuning control button. The display will revert back to the previous display.
3. To select “YES”, press and release the Tuning control button. A full reset will be performed. The station presets will be erased. Alarms will be cancelled and the sleep timer settings will be set to their default values. All the icons will show on the display and the radio will turn off automatically. In case of malfunction due to electrostatic discharge, reset the product (reconnection of the power source may be required) to resume normal operation.
4. You may also elect to unplug your radio for at least 12 hours to reset your radio.

Specifications

AC Power Adapter Requirements
DC 9V/2A Center Pin POSITIVE (+)

Frequency Range
FM: 87.5 – 108 MHz
AM(9K): 522 – 1710 KHz
AM(10K): 520 – 1710 KHz

Back-up Battery
2 x1.5V Size "AA"/UM-3/LR6

Remote control Battery
2 x1.5V Size "AAA"/UM-4/R03

Bluetooth

Bluetooth specification	Bluetooth® Ver 4.1
Profile Support	A2DP, AVRCP1.4
Bluetooth Audio CODEC	SBC
Transmitting Power	Power Class 2
Line of sight range	10 meters/30 feet

Circuit Features

Loudspeaker: 2.5” 8 ohm x 2 full range
Output Power: 3W+3W
Headphone socket: 3.5mm dia stereo
Auxiliary socket: 3.5mm dia stereo
Aerial System: FM Wire aerial/AM Built-in Ferrite Bar
USB socket: 5V/1A Max.

Sangean reserves the right to amend the specification without notice.

If at any time in the future you should need to dispose of this product please note that: Waste electrical products should not be disposed of with household waste. Please recycle where facilities exist.Check with yourLocalAuthority or retailer for recycling advice. (Waste Electrical and Electronic Equipment Directive)