Installation Manual

Installation and Appliance Setup

INSTALLER: Leave this manual with party responsible for use and operation.
OWNER: Retain this manual for future reference.

***NOTICE: DO NOT** discard this manual!*

HEARTH & HOME technologies

Duzy Series
Vented Gas Log Set

Model(s):

RB-18-24NI
RB-18-24PI
RB-30NI
RB-30PI

GAS-FIRED
C UL US
LISTED
MH62954

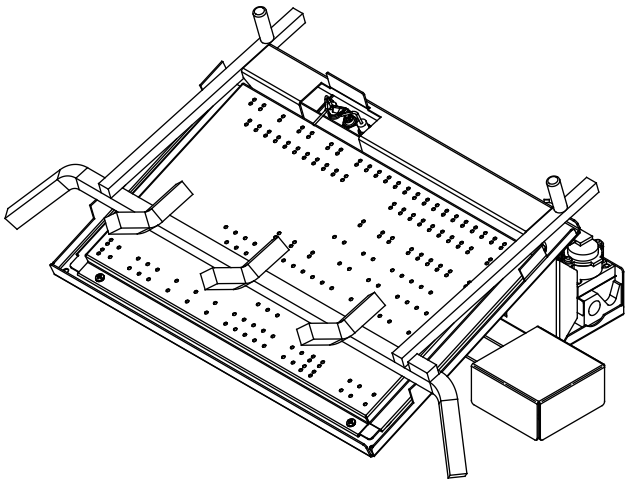

⚠ WARNING:
FIRE OR EXPLOSION HAZARD
Failure to follow safety warnings exactly could result in serious injury, death, or property damage.

- **DO NOT** store or use gasoline or other flammable vapors and liquids in the vicinity of this or any other appliance.
- **What to do if you smell gas**
  - **DO NOT** try to light any appliance.
  - **DO NOT** touch any electrical switch. **DO NOT** use any phone in your building.
  - Leave the building immediately.
  - Immediately call your gas supplier from a neighbor's phone. Follow the gas supplier's instructions.
  - If you cannot reach your gas supplier, call the fire department.
- Installation and service must be performed by a qualified installer, service agency, or the gas supplier.

In the Commonwealth of Massachusetts installation must be performed by a licensed plumber or gas fitter.

See appliance installation manual for additional Commonwealth of Massachusetts requirements.

⚠ Safety Alert Key:

- ***DANGER!*** *Indicates a hazardous situation which, if not avoided will result in death or serious injury.*
- ***WARNING!*** *Indicates a hazardous situation which, if not avoided could result in death or serious injury.*
- ***CAUTION!*** *Indicates a hazardous situation which, if not avoided, could result in minor or moderate injury.*
- ***NOTICE:*** *Used to address practices not related to personal injury.*

Table of Contents

Installation Standard Work Checklist 3

1 Product Specific and Important Safety Information

A. Appliance Certification 4
B. BTU Specifications and Weight 4
C. Gas Pressures 4
D. High Altitude Installations 4
E. Non-Combustible Materials Specification. 4
F. Combustible Materials Specification 4
G. California 4
H. Requirements for the Commonwealth of Massachusetts. . 5

2 Getting Started

A. Design and Installation Considerations 6
B. Tools and Supplies Needed 6
C. Inspect Appliance and Components. 6
D. Check Parts 6
E. Minimum Hearth Dimensions 7
F. Installation Information 7
G. Restrictive Barriers 8
H. Adequate Combustion Ventilation Air 9
I. Negative Pressure 9

3 Gas Information

A. Fuel Type 10
B. Gas Pressure 10
C. Gas Connection 10
D. Verify Gas Pressure 11
E. Air Shutter Setting 11

4 Electrical Information

A. Wiring Requirements 12

5 Appliance Installation and Set-up

A. Position and Secure Appliance 13
B. Install Component Covers 13
C. Install Switch and Remote Control 14
D. Install Grate 14
E. Media Placement 14
F. Log Placement 14
G. Flame Appearance 15
H. Operating Instructions 15

6 Reference Materials

A. Accessories 16

► = Contains updated information

ATTENTION INSTALLER:

Follow this Standard Work Checklist

This standard work checklist is to be used by the installer in conjunction with, not instead of, the instructions contained in this installation manual.

Customer: _____ **Date Installed:** _____
Lot/Address: _____ **Location of Fireplace:** _____
_____ **Installer:** _____
Model (circle one): **RB-18-24NI; RB-18-24PI; RB-30NI; RB-30PI** **Dealer/Distributor Phone #:** _____
Serial #: _____

WARNING! Risk of Fire or Explosion! *Failure to install appliance according to these instructions could lead to a fire or explosion.*

	YES	IF NO, WHY?
Gas Log Install Sections 2 and 5		
• Minimum firebox dimensions met	☐	_____
• Fireplace chimney has been cleaned	☐	_____
• Damper stop properly installed	☐	_____
• Verified adequate combustion ventilation air	☐	_____
• Appliance properly positioned and secured	☐	_____
Gas Section 3		
• Proper appliance for fuel type	☐	_____
• Verified inlet and oulet pressures	☐	_____
• Leak check performed	☐	_____
• Verified proper air shutter setting for fuel type	☐	_____
Electrical Section 4		
• Verified switch wires and/or remote control properly installed	☐	_____
Media & Logs Section 5		
• Verified packaging and protective materials removed	☐	_____
• Media and logs installed correctly	☐	_____
• Verified flame appearance	☐	_____
Finishing		
• Verified mantels and wall projections comply with fireplace installation manual requirements.	☐	_____
• Manual bag and contents given to party responsible for use and operation.	☐	_____

Hearth & Home Technologies recommends the following:
- Photographing the installation and copying this checklist for your file.
- That this checklist remain visible at all times on the appliance until the installation is complete.

Comments: Further description of the issues, who is responsible (Installer/ Builder/ Other Trades, etc) and corrective action needed: _____

Comments communicated to party responsible: _____ By: _____ On: _____
(Builder / General Contractor) (Installer) (Date)

4660-982B 05/24

1 Product Specific and Important Safety Information

A. Appliance Certification

MODEL: RB-18-24NI, RB-18-24PI, RB-30NI, RB-30PI
LABORATORY: Underwriters Laboratories (UL)
TYPE: Vented Gas Log Set
STANDARD: ANSI Z21.60-2017 • CSA 2.26-2017 Decorative gas appliances for installation in solid-fuel burning fireplaces

This product is listed to ANSI standards for "Vented Gas Log Sets" and applicable sections of "Gas Burning Heating Appliances for Manufactured Homes" and "Gas Fired Appliances for Use at High Altitude."

NOTICE: *This installation must conform with local codes. In the absence of local codes you must comply with the National Fuel Gas Code, ANSI Z223.1-latest edition in the U.S.A.*

NOT INTENDED FOR USE AS A PRIMARY HEAT SOURCE. This appliance is tested and approved as either supplemental room heater or as a decorative appliance. It should not be factored as primary heat in residential heating calculations.

B. BTU Specifications and Weight

Models		Maximum Input (BTU/hr)	Main Burner Orifice	Weight (lbs.)
RB-18-24NI	(0-2000 FT)	50,000	.144 in. (3.7 mm)	31
RB-18-24PI	(0-2000 FT)	50,000	.086 in. (2.2 mm)	31
RB-30NI	(0-2000 FT)	65,000	.161 in. (4.1 mm)	36
RB-30PI	(0-2000 FT)	65,000	.098 in. (2.5 mm)	36

C. Gas Pressures

	Natural	Propane (LP)
Inlet Minimum	5.0” wc	11.0” wc
Inlet Maximum	10.0” wc	13.0” wc
Manifold Pressure	3.5” wc	10.0” wc

NATURAL GAS: An external regulator is required to reduce supply pressure to a maximum of 10.0” wc on natural gas systems operating at higher pressure.

PROPANE/LP: An external regulator is required to reduce supply pressure to a maximum of 13.0" wc

D. High Altitude Installations

NOTICE: *If the heating value of the gas has been reduced, these rules do not apply. Check with your local gas utility or authorities having jurisdiction.*

When installing above 2000 feet elevation:

- In the USA: Reduce input rate 4% for each 1000 feet above 2000 feet.
- In CANADA: Input ratings are certified without a reduction of input rate for elevations up to 4500 feet (1370 m) above sea level. Please consult provincial and/ or local authorities having jurisdiction for installations atelevations above 4500 feet (1370 m).Check with your local gas utility to determine proper orifice size.

Check with your local gas utility to determine proper orifice size

E. Non-Combustible Materials Specification

Material which will not ignite and burn. Such materials are those consisting entirely of steel, iron, brick, tile, concrete, slate, glass or plasters, or any combination thereof.

Materials that are reported as passing **ASTM E 136, Standard Test Method for Behavior of Materials in a Vertical Tube Furnace at 750 ºC** shall be considered non-combustible materials**.**

F. Combustible Materials Specification

Materials made of or surfaced with wood, compressed paper, plant fibers, plastics, or other material that can ignite and burn, whether flame proofed or not, or plastered or unplastered shall be considered combustible materials.

G. California

⚠ **WARNING!** This product and the fuels used to operate this product (liquid propane or natural gas), and the products of combustion of such fuels, can expose you to chemicals including benzene, which is known to the State of California to cause cancer and reproductive harm. For more information go to: www.P65Warnings.ca.gov.

Note: The following requirements reference various Massachusetts and national codes not contained in this document.

H. Requirements for the Commonwealth of Massachusetts

For all side wall horizontally vented gas fueled equipment installed in every dwelling, building or structure used in whole or in part for residential purposes, including those owned or operated by the Commonwealth and where the side wall exhaust vent termination is less than seven (7) feet above finished grade in the area of the venting, including but not limited to decks and porches, the following requirements shall be satisfied:

Installation of Carbon Monoxide Detectors

At the time of installation of the side wall horizontal vented gas fueled equipment, the installing plumber or gas fitter shall observe that a hard wired carbon monoxide detector with an alarm and battery back-up is installed on the floor level where the gas equipment is to be installed. In addition, the installing plumber or gas fitter shall observe that a battery operated or hard wired carbon monoxide detector with an alarm is installed on each additional level of the dwelling, building or structure served by the side wall horizontal vented gas fueled equipment. It shall be the responsibility of the property owner to secure the services of qualified licensed professionals for the installation of hard wired carbon monoxide detectors.

In the event that the side wall horizontally vented gas fueled equipment is installed in a crawl space or an attic, the hard wired carbon monoxide detector with alarm and battery back-up may be installed on the next adjacent floor level.
In the event that the requirements of this subdivision can not be met at the time of completion of installation, the owner shall have a period of thirty (30) days to comply with the above requirements; provided, however, that during said thirty (30) day period, a battery operated carbon monoxide detector with an alarm shall be installed.

Approved Carbon Monoxide Detectors

Each carbon monoxide detector as required in accordance with the above provisions shall comply with NFPA 720 and be ANSI/UL 2034 listed and IAS certified.

Signage

A metal or plastic identification plate shall be permanently mounted to the exterior of the building at a minimum height of eight (8) feet above grade directly in line with the exhaust vent terminal for the horizontally vented gas fueled heating appliance or equipment. The sign shall read, in print size no less than one-half (1/2) in. in size, **"GAS VENT DIRECTLY BELOW. KEEP CLEAR OF ALL OBSTRUCTIONS".**

Inspection

The state or local gas inspector of the side wall horizontally vented gas fueled equipment shall not approve the installation unless, upon inspection, the inspector observes carbon monoxide detectors and signage installed in accordance with the provisions of 248 CMR 5.08(2)(a)1 through 4.

Exemptions

The following equipment is exempt from 248 CMR 5.08(2)(a)1 through 4:

- The equipment listed in Chapter 10 entitled "Equipment Not Required To Be Vented" in the most current edition of NFPA 54 as adopted by the Board; and
- Product Approved side wall horizontally vented gas fueled equipment installed in a room or structure separate from the dwelling, building or structure used in whole or in part for residential purposes.

MANUFACTURER REQUIREMENTS

Gas Equipment Venting System Provided

When the manufacturer of Product Approved side wall horizontally vented gas equipment provides a venting system design or venting system components with the equipment, the instructions provided by the manufacturer for installation of the equipment and the venting system shall include:

- Detailed instructions for the installation of the venting system design or the venting system components; and
- A complete parts list for the venting system design or venting system.

Gas Equipment Venting System NOT Provided

When the manufacturer of a Product Approved side wall horizontally vented gas fueled equipment does not provide the parts for venting the flue gases, but identifies "special venting systems", the following requirements shall be satisfied by the manufacturer:

- The referenced "special venting system" instructions shall be included with the appliance or equipment installation instructions; and
- The "special venting systems" shall be Product Approved by the Board, and the instructions for that system shall include a parts list and detailed installation instructions.

A copy of all installation instructions for all Product Approved side wall horizontally vented gas fueled equipment, all venting instructions, all parts lists for venting instructions, and/or all venting design instructions shall remain with the appliance or equipment at the completion of the installation.

See Gas Connection section for additional Commonwealth of Massachusetts requirements.

2 Getting Started

A. Design and Installation Considerations

Installation MUST comply with local, regional, state and national codes and regulations. Consult insurance carrier, local building inspector, fire officials or authorities having jurisdiction over restrictions, installation inspection and permits.

Before installing, determine the following:

- Where burner assembly and log set are to be installed.
- Gas supply piping.
- Whether optional accessories, devices such as a wall switch or remote control are desired.
- Approved wood burning masonry fireplace.

Installation and service of this appliance should be performed by qualified personnel. Hearth & Home Technologies recommends HHT Factory Trained or NFI certified professionals.

hearthED FACTORY TRAINING Fuel Your Fire

NFI NATIONAL FIREPLACE INSTITUTE A CERTIFICATION AGENCY

Improper installation, adjustment, alteration, service or maintenance can cause injury or property damage. For assistance or additional information, consult a qualified service technician, service agency or your dealer.

B. Tools and Supplies Needed

Before beginning the installation be sure that the following tools and building supplies are available.

- Tape measure
- Gloves
- Voltmeter
- Manometer
- Phillips screwdriver
- Safety glasses
- Flat blade screwdriver
- Soapy water solution for gas leak testing
- Electric drill and bits (1/4 in. magnetic)
- External regulator (for propane/LP only & 1/2 psi Natural gas system)
- Piping which complies with local codes
- Pipe sealant approved for use with propane/LP (Resistant to sulfur compounds)
- Manual shutoff valve
- Sediment trap
- Tee joint
- Pipe wrench

⚠ CAUTION

Gloves are recommended when handling refractory and logs to prevent skin irritation from loose fibers. Logs are fragile; handle with care.

C. Inspect Appliance and Components

- Carefully remove the applaince and components from the packaging.
- Attached to the appliance are tags identifying the manufacturer, serial number, model number. Including log set size, BTU/hr ratings and gas type.
- Review the attached tags before proceeding. Ensure that all minimum fireplace dimension requirements are achieved using Figure 2.1.
- Ensure the gas type provided in the fireplace coincide with the gas type marked on the tag.
- Logs are packaged and sold separately.
- Report to your dealer any parts damaged in shipment.
- Read all of the instructions before starting the installation. Follow these instructions carefully during the installation process to ensure maximum safety and benefit.

⚠ ***WARNING! Risk of Fire or Explosion!*** *Damaged parts could impair safe operation.* ***DO NOT*** *install damaged, incomplete or substitute components. Keep appliance dry.*

Hearth & Home Technologies disclaims any responsibility for, and the warranty will be voided by, the following actions:

- Installation and use of any damaged appliance.
- Modification of the appliance.
- Installation other than as instructed by Hearth & Home Technologies.
- Installation and/or use of any component part not approved by Hearth & Home Technologies.

Any such action may cause a fire hazard

⚠ ***WARNING! Risk of Fire, Explosion or Electric Shock! DO NOT*** *use this appliance if any part has been under water. Call a qualified service technician to inspect the appliance and to replace any part of the control system and/or gas control which has been under water.*

D. Check Parts

Verify contents to ensure you have received all parts. You should have the following:

- Vented Gas Log Burner Assembly
- Grate Assembly
- On/Off Switch and Wire Harness
- RCB Remote Control
- (2) Bags of Lava Rock & (1) Bag Rock Wool
- Owner's and Installation Instructions
- Valve and Ignition Covers (Flat)
- Fastener Pack w/ (2) Anchor Screws
- Flex Line & Pipe Fittings
- Damper Clamp

E. Minimum Hearth Dimensions

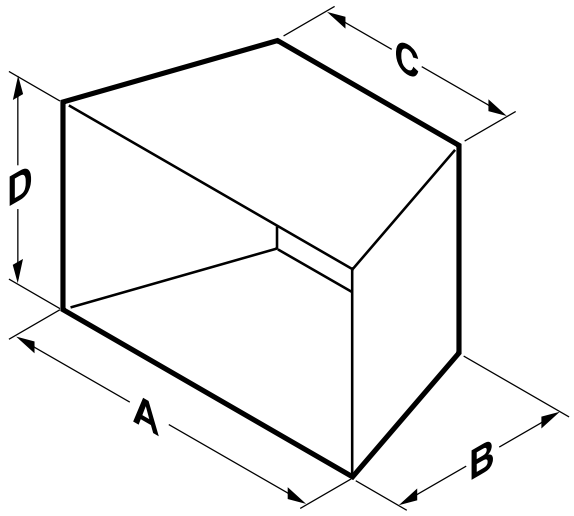

Model	A	B	C	D
RB-18-24NI RB-18-24PI	28.00” (711 mm)	13.50” (343 mm)	18.50” (470 mm)	16.00” (406 mm)
RB-30NI RB-30PI	34.00” (864 mm)	13.50” (343 mm)	24.50” (622 mm)	16.00” (406 mm)

Figure 2.1 Minimum Hearth Dimensions

F. Installation Information

⚠ WARNING

This appliance is for installation only in a solid-fuel burning masonry or UL127 factory-built fireplace. It has been design certified for these installations.

Note: Use manufacturer's installation and clearance requirements as defined in their manual.

BEFORE INSTALLING THE APPLIANCE:

- Turn off gas supply to Masonry fireplace or manufactured wood burning firebox.
- Have the fireplace floor and chimney professionally cleaned to remove ash, soot, creosote or other obstructions. Have this cleaning performed annually after installation.
- Seal any fresh air vents or ash clean-out doors located on floor or wall of fireplace. If not, drafting may cause pilot outage or sooting. Use a heat-resistant sealant.

⚠ WARNING

Do not install the applaince:

- **Where curtains, furniture, clothing, or other flammable objects are less than 36" from the front of the heater.**
- **In high traffic areas.**
- **In windy or drafty areas.**

Damper Stop Installation

A damper stop is provided with this appliance. The damper stop MUST be installed to prevent full closure of the fireplace damper blade and provide a minimum flue opening, per tables below.

Free opening area of chimney damper for venting combustion products (factory-built fireplaces)

	RB-18-24NI / PI	RB-30NI / PI
Chimney Height (feet)	Minimum Opening (in^2)	Minimum Opening (in^2)
10	28.3	44.2
15	21.2	32.2
20	18.1	26.4
25	15.9	22.9
30	14.5	20.4
35	13.2	18.9
40	12.6	18.1

Factory Built Fireplace: Position damper stop on the top half of the damper blade, slide stop towards the center of the damper blade to create an interferance with the bead on the flue collar and tighten bolt. Either side of the damper blade is acceptable. See Figure 2.2.

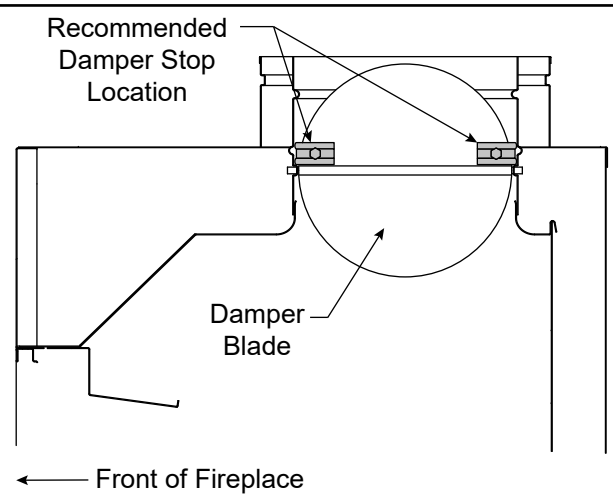

Figure 2.2 Factory Built Fireplace Example

⚠ WARNING

Improper installation or use of the appliance can cause serious injury or death from fire, burns, explosion or carbon monoxide poisoning.

Note: Should the stop not fit, or provide the required permanent opening from the table have the damper blade cut to provide minimum permanent opening or a permanent stop installed.

Damper Stop Installation (cont.)

Free opening area of chimney damper for venting combustion products (masonry-built fireplaces)

	RB-18-24NI / PI	RB-30NI / PI
Chimney Height (feet)	Minimum Opening (in^2)	Minimum Opening (in^2)
6	41.7	56.6
8	38.7	52.4
10	35.2	48.2
15	32.0	43.2
20	28.8	39.8
30	26.5	35.9

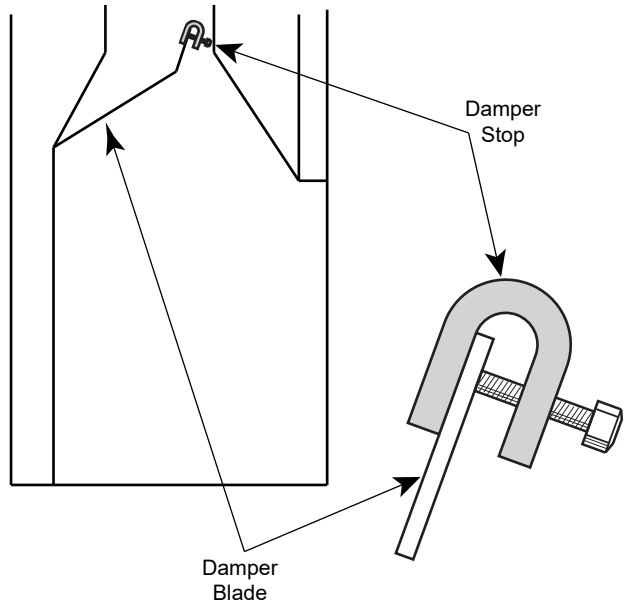

Figure 2.2 Masonary Fireplace Example

For Massachusetts Residents Only

Installation of this vented gas log set in the Commonwealth of Massachusetts requires the damper be permanently removed or welded in the fully open position. In addition, a naturally vented gas log may not be installed in a bedroom or bathroom in the Commonwealth of Massachusetts.

⚠ WARNING

The fireplace and gas logs function as a system. If the fireplace is spilling into the room (check with a match or smoke stick), reposition the damper clamp until a positive draft is obtained, by opening the damper. If negative pressure in the home prevents having a positive draft contact your dealer.

G. Restrictive Barriers

⚠ WARNING

Barriers such as the bottom of a glass door frame placed in front of a gas log set can change the air flow characteristics of the fireplace, which in turn can cause the applaince to overheat and manfunction when installed as a vented log set.

The following are guidelines for placing a gas log set in a fireplace that has a restrictive barrier on the fireplace for vented appliance only. See Figure 2.4.

**Any barrier greater than 3" placed in front of the gas log set is not recommended by the manufacturer.*

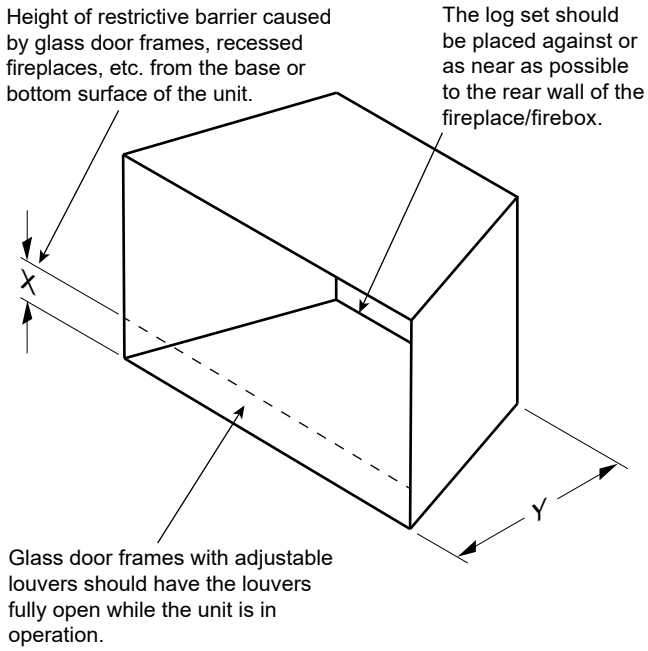

Height of Restriction (X)	Minimum Depth of Fireplace (Y)
No Restriction	13.50”
0” to 3” Restriction	15.00”
Greater than 3” Restriction	*

Figure 2.4 Restrictive Barriers

NOTE: Non-combustible material such as refractory brick may be used to line the floor of the fireplace in order to raise the height of the gas log set in relation to a restrictive barrier. If the appliance is raised, the minimum height dimension listed in the homeowner’s manual must be met or exceeded.

NOTE: This log set is supplied with a remote receiver, a restrictive barrier may reduce the battery life by increasing the ambient temperature inside the fireplace.

H. Adequate Combustion Ventilation Air

This appliance shall not be installed in a confined space or unusually tight construction unless provisions are provided for adequate combustion and ventilation air.

The National Fuel Gas Code, (ANSI Z223.1/NFPA54), defines a confined space as a space whose volume is less than 50 cubic feet per 1,000 BTU per hour (4.8m^3 per kw) of the aggregate input rating of all appliances installed in that space. Rooms communicating directly with the space in which the appliances are installed, through openings not furnished with doors, are considered a part of a confined space.

⚠ WARNING

If the area in which the appliance may be operated does not meet the required volume for indoor combustion air, combustion and ventilation air shall be provided by one of the methods described in the *National Fuel Gas Code, ANSI Z223.1/NFPA 54*, the *International Fuel Gas Code* or applicable local codes.

I. Negative Pressure

Negative pressure results from the imbalance of air available for the fireplace to operate properly. Possible causes for this imbalance include:

- Exhaust fans (kitchen, bath, etc.)
- Range hoods
- Combustion air requirements for furnaces, water heaters and other combustion appliances
- Clothes dryers
- Location of return-air vents to furnace or air conditioning
- Imbalances of the HVAC air handling system
- Upper level air leaks: recessed lighting, attic hatch opening, duct leaks.

3 Gas Information

⚠ WARNING

Use new black iron or steel pipe. Internally tinned copper or copper tubing can be used per National Fuel Code, section 2.6.3, providing gas meets hydrogen sulfide limits, and where permitted by local codes. Gas piping system must be sized to provide minimum inlet pressure (Listed on Data Plate) at the maximum flow rate (BTU/hr). Undue pressure loss will occur if the pipe is too small.
A manual shutoff valve must be installed upstream of the appliance. Union tee and plugged 1/8" NPT pressure tapping point should be installed upstream of the appliance.

A. Fuel Type

The gas supply must be the same as stated on the appliance rating plate. If the gas supply is different, DO NOT INSTALL THE APPLIANCE. Contact your dealer for the correct model.

B. Gas Pressure

- Optimum appliance performance requires proper input pressures.
- Gas line sizing requirements will be determined in ANSI Z223.1 National Fuel Gas Code in the USA.
- Pressure requirements are:

	Natural	Propane (LP)
Inlet Minimum	5.0" wc	11.0" wc
Inlet Maximum	10.0" wc	13.0" wc
Manifold Pressure	3.5" wc	10.0" wc

⚠ ***WARNING! Risk of Fire or Explosion!*** *High pressure will damage valve. Low pressure could cause explosion.*

- Verify inlet pressures. Verify minimum pressures when other household gas appliances are operating.
- Install regulator upstream of valve if line pressure is greater than 1/2 psig.

⚠ WARNING

Fire Risk!
Explosion Hazard!
High pressure will damage valve!

- **Disconnect gas supply piping BEFORE pressure testing gas line at test pressures above 1/2 psig.**
- **Close the manual shutoff valve BEFORE pressure testing gas line at test pressures equal to or less than 1/2 psig.**

Note: Have the gas supply line installed in accordance with local codes, if any. If not, follow ANSI Z223.1. Installation should be done by a qualified installer approved and/or licensed as required by the locality (In the Commonwealth of Massachusetts installation must be performed by a licensed plumber or gas fitter).

Note: A listed (and Commonwealth of Massachusetts approved) 1/2 in. (13 mm) T-handle manual shut-off valve must be installed upstream of the appliance.

IMPORTANT: Install manual shutoff valve in an accessible location. The manual shutoff valve is for turning on or shutting off the gas to the appliance.

⚠ WARNING

CHECK GAS TYPE: The gas supply must be the same as stated on the appliance rating plate. If the gas supply is different, DO NOT INSTALL THE APPLIANCE. Contact your dealer for the correct model.

C. Gas Connection

The gas inlet connection is on the right rear side of the appliance. To connect from the opposite side, route the inlet pipe and appliance gas connector around the back of the appliance.

IMPORTANT: When tightening up the joint to the valve, hold the valve securely to prevent movement.

Test all gas joints from the gas meter to the appliance valve for leaks using a gas analyzer or soap and water solution after completing connection. DO NOT USE AN OPEN FLAME. Check the gas pressure with the appliance burning.

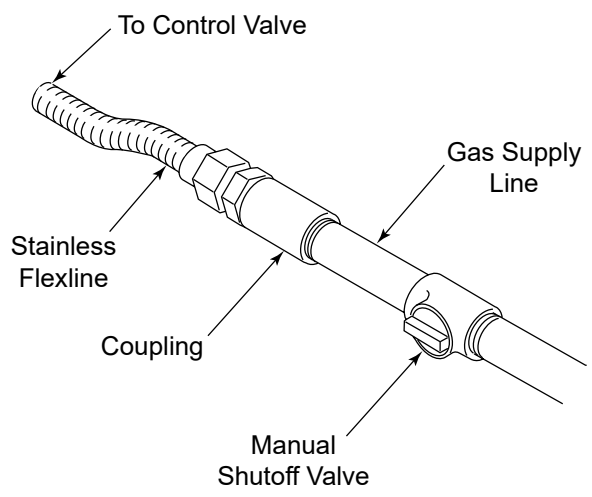

Figure 3.1 Gas Connection

D. Verify Gas Pressure

The valve regulator controls the burner pressure. Gas pressure must be verified at both the inlet and outlet pressure test ports.

1. Turn captured screw counterclockwise two or three turns. See Figure 3.2.
2. Place tubing from pressure gauge over test port.
3. After taking pressure readings, be sure and turn captured screw clockwise firmly to re-seal. Do not over torque.
4. Check for gas leaks.

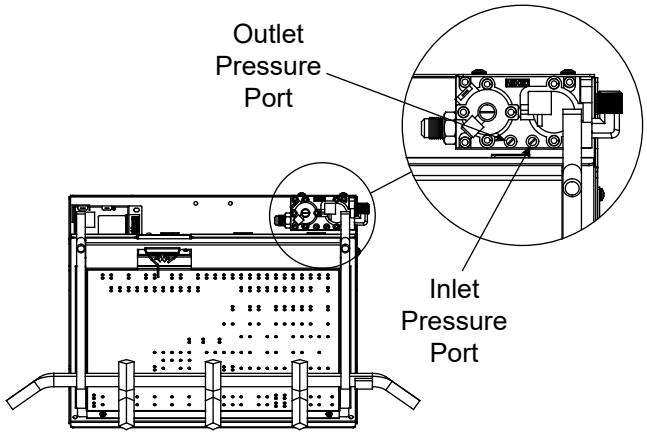

Figure 3.2 Valve Pressure Port Locations

E. Air Shutter Setting

⚠ ***WARNING!*** *Risk of Explosion or Delayed Ignition! Improperly adjusted air shutter may cause excessive soot buildup.*

NOTICE: *If excessive sooting occurs, provide more air by opening the air shutter.*

The air shutter is preset at the factory. Settings should be verified/adjusted by a qualified service technician at the time of installation. See Figure 3.3.

To adjust air shutter settings:

1. Carefully stand the Burner Assembly to gain access to the burner bottom.
2. Loosen air shutter adjustment screw.
3. Rotate air shutter to appropriate postion.
4. Tighten air shutter set adjustment screw.

MODEL	FUEL TYPE	AIR SHUTTER
RB-18-24NI	Natural Gas	5/16”
RB-18-24PI	Propane	Fully Open
RB-30NI	Natural Gas	5/16”
RB-30PI	Propane	Fully Open

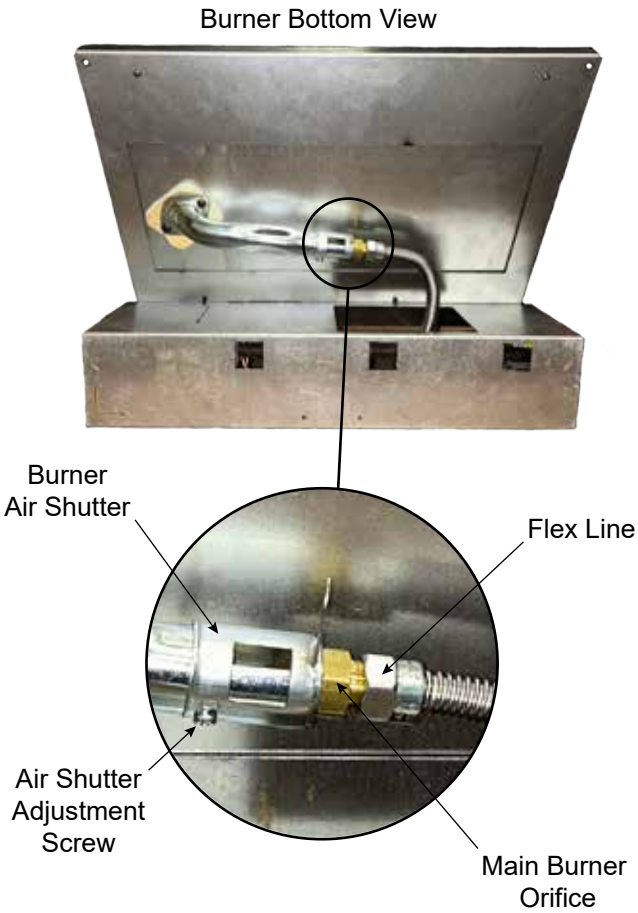

Figure 3.3 Air Shutter Adjustment

4 Electrical Information

A. Wiring Requirements

⚠ ***WARNING! Risk of Shock or Explosion! DO NOT** wire 110-120 VAC to the valve. Incorrect wiring will damage controls.*

- The intermittent pilot ignition system (IPI) on the Duzy series gas log set comes standard with an integrated battery pack, that holds (2) D size batteries. See Figure 4.1.
- The appliance does NOT require 110 VAC for operation. If the vented fireplace/firebox the appliance is installed in is electrically wired, it must be wired and grounded in accordance with local codes or, in the absence of local codes, with **National Electric Code ANSI/NFPA 70-latest edition**.
- An ON/OFF switch is provided as part of the Remote Control supplied with the appliance.
- The Remote Control can be incorporated into this system by connecting the remote or wall switch wires to the appliance switch wires as shown. See Figure 4.2.

NOTE: The use of a thermostat is prohibited in vented log installations.

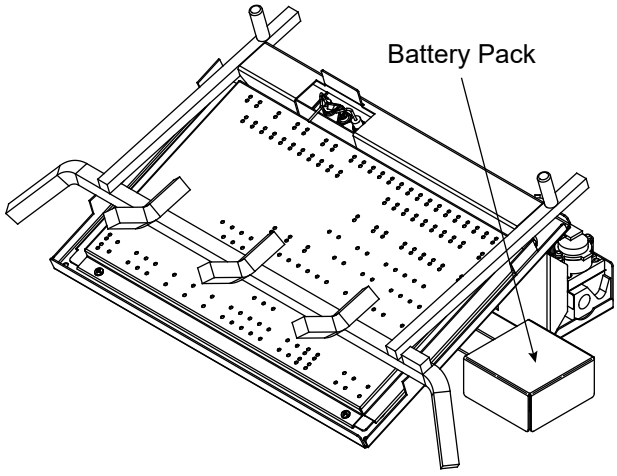

Figure 4.1 Battery Pack Location

⚠ ***WARNING! Risk of Shock!** Label all wires prior to disconnection when servicing controls. Wiring errors can cause improper and dangerous operation. Verify proper operation after servicing.*

⚠ ***WARNING! Risk of Shock!** Replace damaged wire with type 105º C rated wire. Wire must have high temperature insulation.*

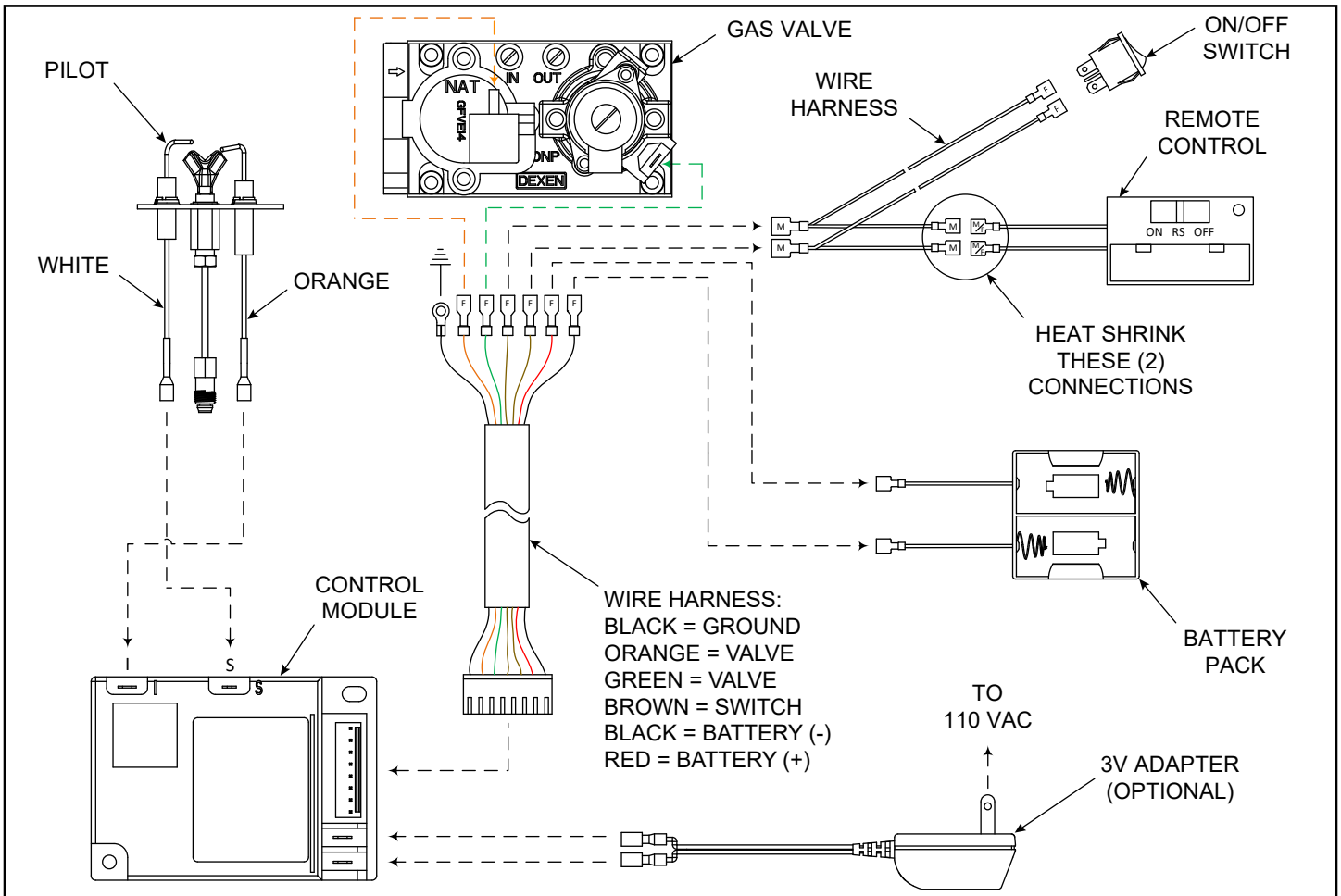

Figure 4.2 IPI Wiring Diagram

5 Appliance Installation and Set-up

⚠ WARNING

You must secure the gas log appliance to the fireplace floor. If not, the entire unit may move when you adjust the controls. Movement of unit may cause shifting of the gas logs which leads to sooting and improper burning. Grate movement could cause a gas leak.

A. Position and Secure Appliance

The appliance is assembled with the gas controls installed at the factory, and is designed to connect the 3/8” supply line before making final placement inside the fireplace.

1. Place the appliance towards the rear and center of the fireplace and connect the gas line.
2. Tighten incoming gas connection. Follow instructions in section 3.C Gas Connection to check for gas leaks.
3. Center the gas log appliance in the fireplace. Make certain the front feet of the grate sit inside the front edge of the fireplace.
4. Once the appliance is positioned correctly, side to side and front to back, mark the mounting hole positions on the fireplace floor. See Figure 5.1 for mounting hole locations.
5. Drill (2) 5/32” diameter holes approximately 1-1/2” deep.
6. Anchor the appliance to the fireplace floor using the screws provided.

Note: Proper installation of the appliance is essential to prevent movement of the gas logs and controls during operation.

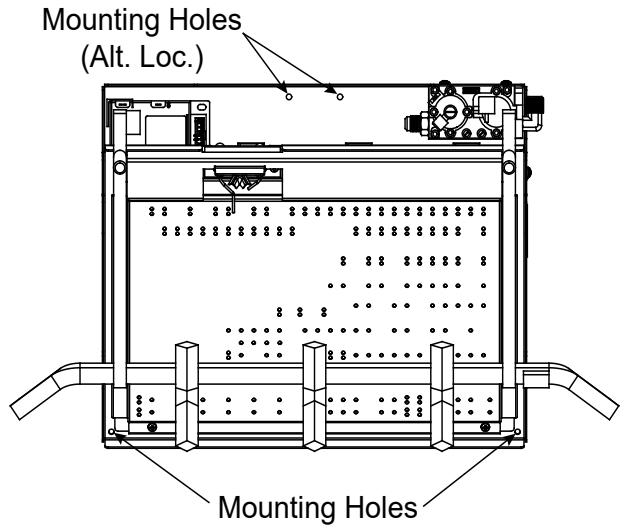

Figure 5.1 Mounting Holes and Grate Installation

B. Install Component Covers

This appliance is shipped with two component covers. These covers are designed to provide additional protection for the appliance gas valve and ignition control module..

Note: The Valve Cover is shipped flat and must be formed prior to installation.

1. Form Covers as shown. See Figure 5.2.
2. Install Covers so that they cover the appliance gas valve and ignition control module completely. See Figure 5.2

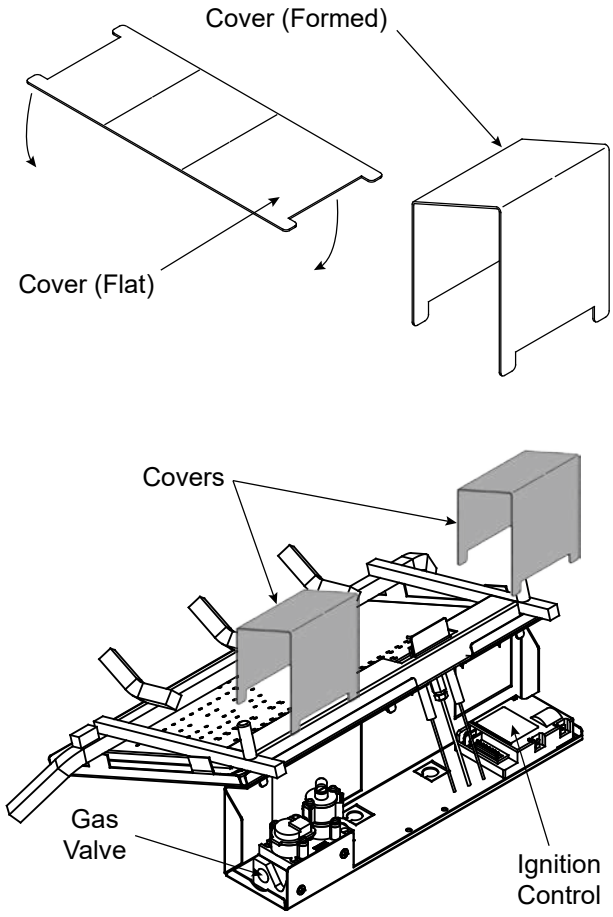

Figure 5.2 Cover Installation

C. Install Switch and Remote Control

The Duzy series vented log set comes supplied with an On/Off Switch and a battery powered remote control kit.

1. Connect the On/Off Switch and Remote Receiver to appliance brown switch wires using the included wire harness as shown in Figure 4.2.

Note: Heat shrink tubing has been supplied and should be used to isolate remote control receiver connectors from accidental contact with conductive surfaces, which may result in unintended appliance ignition.

2. Position the remote control receiver in a convenient location, which allows for safe safe operation of the appliance and replacement of batteries, as necessary.

D. Install Grate

This appliance is shipped with an integral grate that has been designed to correctly position and support the gas logs.

1. To properly position the grate, align the three tabs located at the rear of the grate, with the three slots in the rear of the burner base assembly. The front grate bar should rest on the two support tabs located on the side of the burner base assembly. This will position the grate front to back and side to side. See Figure 5.1.

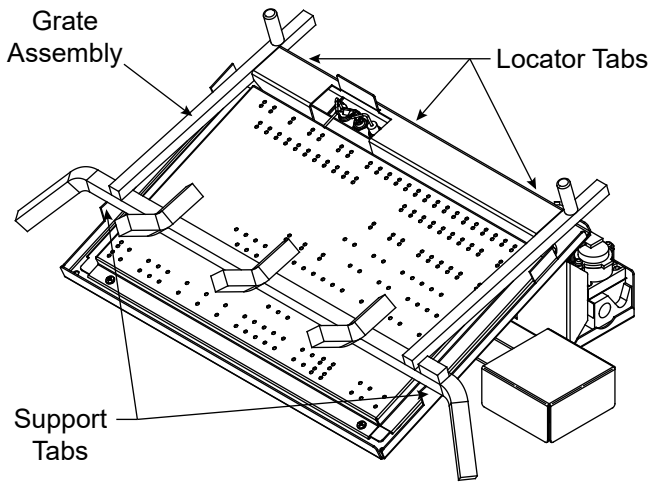

Figure 5.3 Grate Placement

⚠ WARNING

The positioning of the grate and logs is critical to the safe and clean operation of this appliance. Sooting and other problems may result if the logs are not properly and firmly positioned in the appliance. Never add additional logs or embellishments such as pine cones, vermiculite or rock wool to the appliance. Only use the logs and rock wool supplied with the unit.

Failure to position the parts in accordance with diagrams on the following pages or failure to use only parts specifically approved for this appliance may result in property damage or personal injury.

E. Media Placement

Glowing Embers:

Cover the entire top surface of the burner pan with glowing embers (rock wool) provided. Tear pieces into approximately 1/2” diameter pieces, roughly nickel size, and cover the burner evenly.

DO NOT:

- Pile the glowing embers too heavily on the pan.
- Place glowing embers higher than the top of the front grate bar.
- Cover the pilot with glowing embers

Decorative Volcanic Rock:

Spread decorative volcanic rock evenly in front of, and on the left and right sides of the burner pan.

DO NOT:

- Place decorative volcanic rock on the burner, pilot or logs.

F. Log Placement

The Duzy series vented log set has multiple log options to choose from. These logs are sold seperately and are listed in Section 6 of this manual.

For log placement instructions refer to the iinstallation instructions supplied with the log set.

NOTE: The Duzy appliance is designed to be operated with one of the optional log sets installed. Do NOT operate this appliance without a log set installed.

G. Flame Appearance

Flames from the pilot and burner should be visually checked as soon as the appliance is installed. In addition, periodically check the flames visually during operation.

Pilot Flame:

The IPI pilot flame must always be present when the appliance is in operation. Pilot flame should engulf the flame sensor rod. See Figure 5.18.

If the pilot flame does not touch the flame sensor, then the main burner cannot function reliably.

Figure 5.18 IPI Pilot Flame

Main Burner Flame:

Operate the appliance at full rate for 45 minutes, the following flame appearances should be observed.

Burner will have a random pattern of yellow flames, with glowing embers covering the main burner.

Note: This appliance is a vented gas log set, therefore some flame impingement and soot is normal.

Observe flames for excessive impingement with any of the logs. If excessive impingement is present, turn off log set and allow to cool. Remove all logs and carefully reinstall following log placement instructions precisely. Relight burner and check again for excessive impingement. If flame impingement cannot be eliminated, contact your installer or dealer for assistance.

H. Operating Instructions

Avoid any drafts that alter burner flame patterns. Do not allow fans to blow directly on the appliance. Do not place a blower inside the burn area of the fireplace. Ceiling fans may create drafts that alter flame patterns. Sooting and improper burning will result.

During manufacturing, fabricating and shipping, various components of this appliance are treated with certain oils, films or bonding agents. These chemicals are not harmful, but may produce annoying smoke and smells as they are burned off during the initial operation of the appliance, possibly causing headaches or eye or lung irritation. This is a normal and temporary occurrence.

The initial break-in operation should last four hours with the burner at the highest setting. Provide maximum ventilation by opening windows or doors to allow odors to dissipate. Any odors remaining after this initial break-in will be slight and will disappear with continued use.

This appliance must not be operated with glass doors in the closed position.

6 Reference Materials

A. Accessories

Media

- DV-RWA Rock Wool, Carton of 12-4 oz. Bags
- VR1000A Volcanic Rock - Carton of 12 - 2 lb. Bags

Power Supply

- SRV593-593 3V Transformer

Remote Protective Cover

- RRCM Remote Receiver Cover Metal

Conversion Kits

- SRV4660-060 Natural Gas Conversion Kit for Duzy Series Appliance
- SRV4660-061 Propane Gas Conversion Kit for Duzy Series Appliance

Log Sets

- DUZY2LS-18-24 Ceramic Fiber Log Set for RB-18-24 Burners (4 Piece)
- DUZY2LS-30 Ceramic Fiber Log Set for RB-30 Burners (4 Piece)
- DUZY3LS-18-24 Refractory Cement Log Set for RB-18-24 Burners (6 Piece)
- DUZY3LS-30 Refractory Cement Log Set for RB-30 Burners (6 Piece)
- DUZY5LS-18-24 Ceramic Fiber Log Set for RB-18-24 Burners (8 Piece)
- DUZY5LS-30 Ceramic Fiber Log Set for RB-30 Burners (8 Piece)