Service Manual

Outdoor Unit: SENTC-24TD
SENTC-36TD
SENTC-48TD
SENTC-60TD

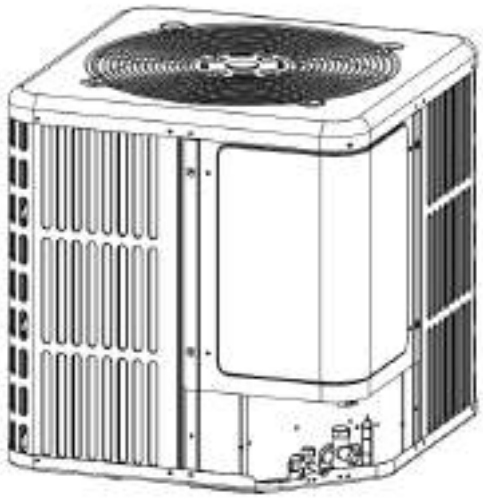

⚠ RECOGNIZE THIS SYMBOL AS A SAFETY PRECAUTION

ATTENTION INSTALLING PERSONNEL

Prior to installation, thoroughly familiarize yourself with this Installation Manual. Observe all safety warnings.
During installation or repair, caution is to be observed
It is your responsibility to install the product safely and to educate the customer on its safe use

Guangdong Zemspro HVAC Equipment Company Limited

Part 1

General Information

1 Product lineup 2

2 Specifications 3

1 Product lineup

Model	Cooling Capacity (Btu/h)	Heating Capacity (Btu/h)	Appearance
SENTC-24TD	24000	26000	
SENTC-36TD	36000	34200	
SENTC-48TD	48000	48000	
SENTC-60TD	55000	54000	

2 Specifications

Outdoor unit			**ZOT6P-24HN4-M-SE20**	**ZOT6P-36HN4-M-SE20**	**ZOT6PA-48HN4-M-SE20**	**ZOT6PA-60HN4-M-SE20**
Power Supply	Rated Voltage	V, Ph, Hz	208/230, 1, 60,	208/230, 1, 60,	208/230, 1, 60,	208/230, 1, 60,
Cooling	capacity	Btu/h	24000	36000	48000	54000
	Input	W	1950	3400	4900	6300
Heating	capacity	Btu/h	24000	34200	48000	54000
	Input	W	2050	3000	4000	4700
Outdoor MINIMUM CIRCUIT AMPACITY		A	19.0	24.0	36.0	39.0
Outdoor MAX.FUSE		A	20	30	40	40
Outdoor Outdoor Air Flow(CFM)		CFM	2100.0	2800.0	3050.0	3050.0
Outdoor noise level (Hi)		dB(A)	58.0	58.0	60.0	60.0
Connection Wiring			485: AWG 25*3 Shielded, 24V: AWG 20			
Comunication Type			24V / 485	24V / 485	24V / 485	24V / 485
Throttle type			EXV	EXV	EXV	EXV
Dimension (W×D×H)	Unit Dimension	inch	29-9/64×29-9/64×25		29-9/64×29-9/64×32-7/8	
	Packing Demension	inch	30-5/16×30-5/16×26-3/16			
Weight	Net/Gross Weight	lbs	143/151	143/151	187/196	187/196
Refrigerant	Type/charge	oz	R32/84.72	R32/84.72	R32/105.9	R32/105.9
	Additional refrigerant	oz/ft	0.52	0.52	0.52	0.52
	N.A.Design Pressure	PSI	609/174	609/174	609/174	609/174
Refrigerant piping	Liquid side/Gas side	inch	(3/8) /(3/4)	(3/8) /(3/4)	(3/8) /(3/4)	(3/8) /(3/4)
	Max.piping length	ft	164	246	246	246
	Max. difference in level	ft	82	98.4	98.4	98.4
Ambient temp. operation range	Cooling	℉	5~131	5~131	5~131	5~131
	Heating	℉	-4~75	-4~75	-4~75	-4~75

Part 2

Component Layout and Refrigerant Circuit

1 Layout Functional Components 5

2 Piping diagrams 6

1 Layout Functional Components

MRH32-24, MRH32-36

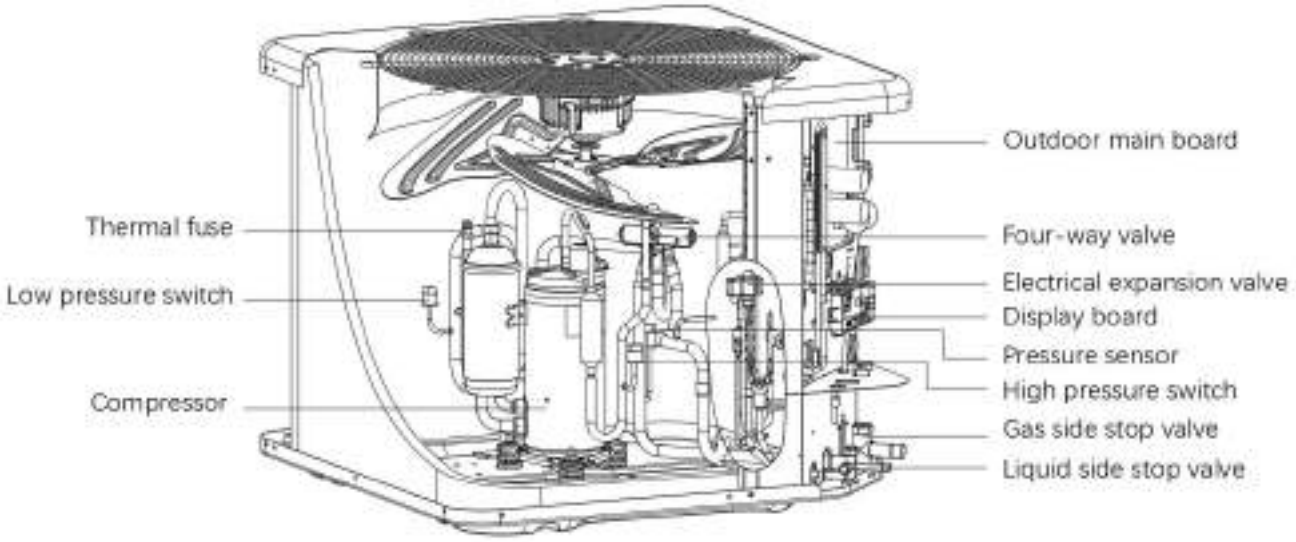

MRH32-48, MRH32-60

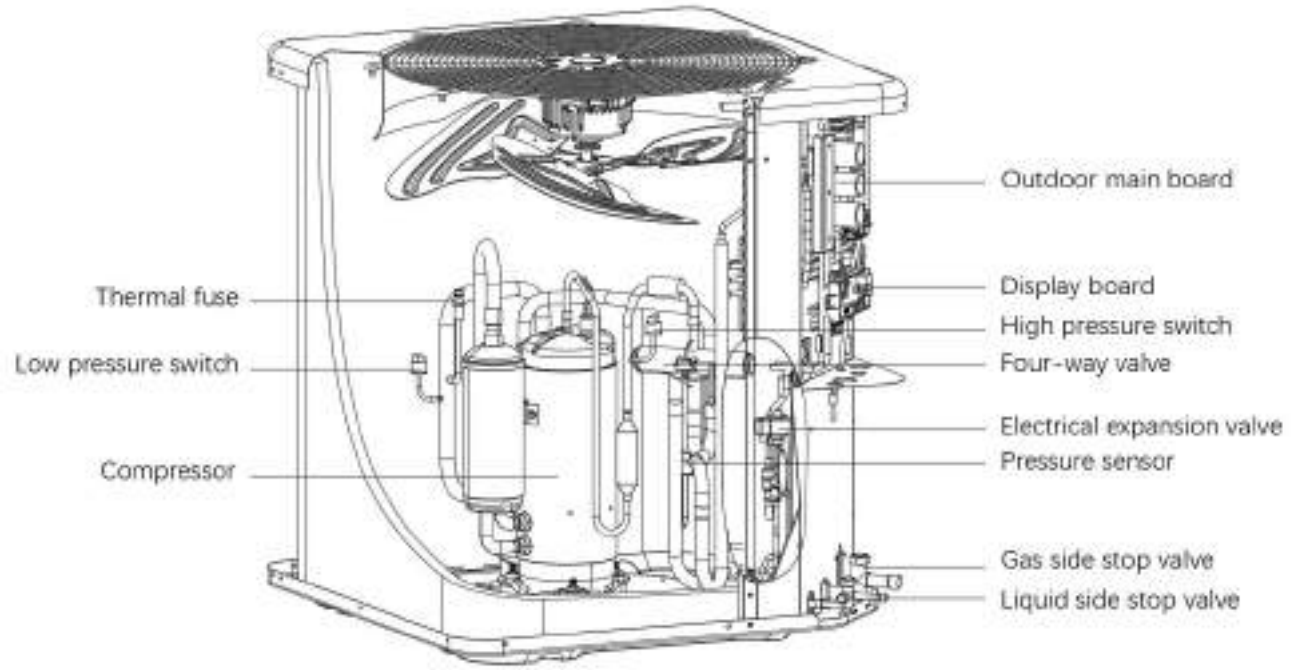

2 Piping diagrams

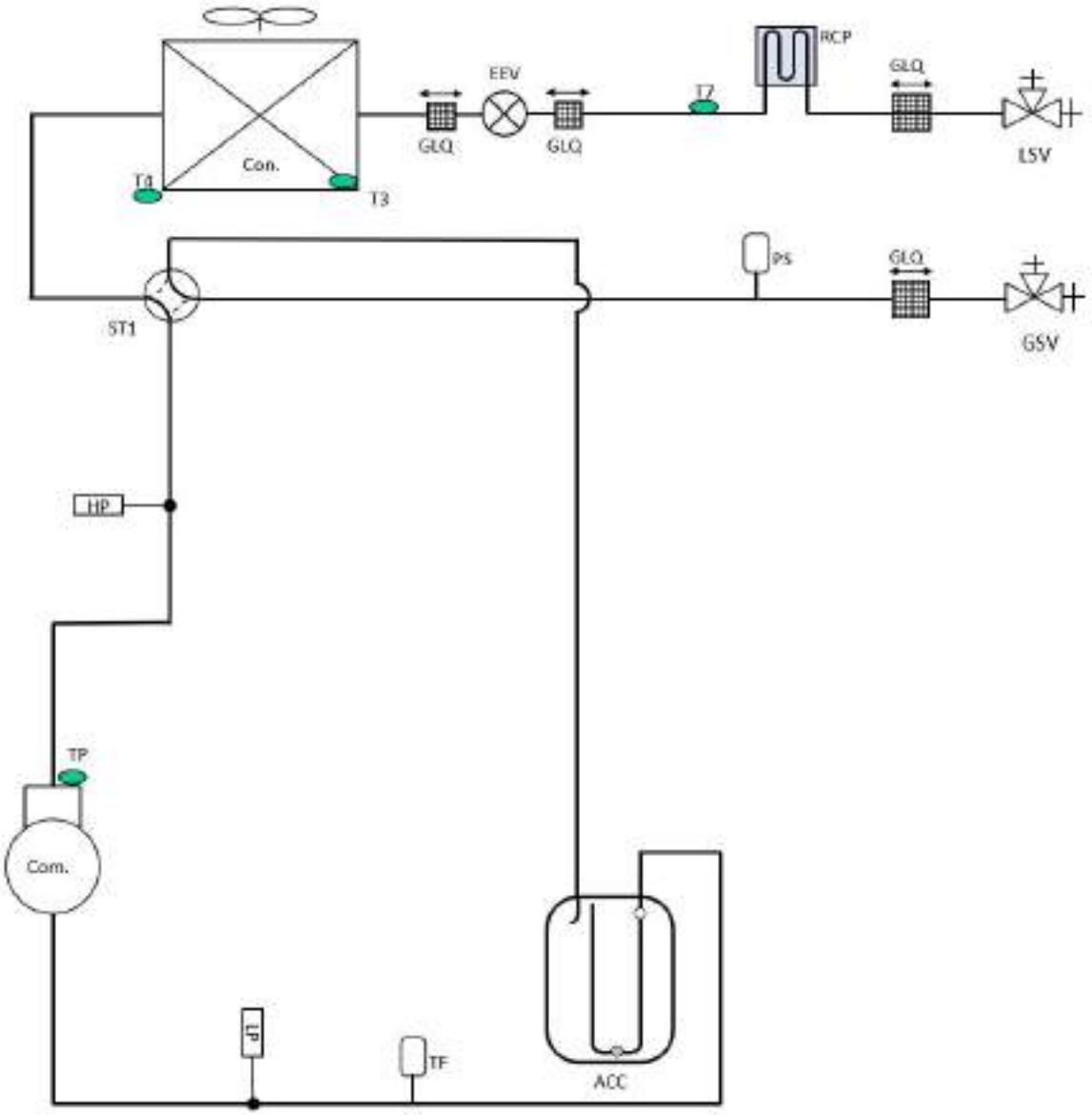

NO.	Component(Outdoor unit)	NO.	Component(Outdoor unit)
Com.	Compressor	RCP	Refrigerant cooling pipe
TP	Exhaust temperature sensor	GLQ	Filter
HP	High pressure switch	LSV	Liquid Stop Valve
ST1	Four-way valve	GSV	Gas Stop Valve
T4	Ambient temperature sensor	PS	Pressure sensor
T3	Condenser coil temperature sensor	ACC	Gas-liquid separator
Con.	Condenser	TP	Thermal fuse
EEV	Electrical Expansion Valve	LP	Low pressure switch

Part 3

Wiring Diagram

1 Electric wiring diagram 9

2 PCB 10

3 Low voltage wiring diagram 12

1 Electric wiring diagram

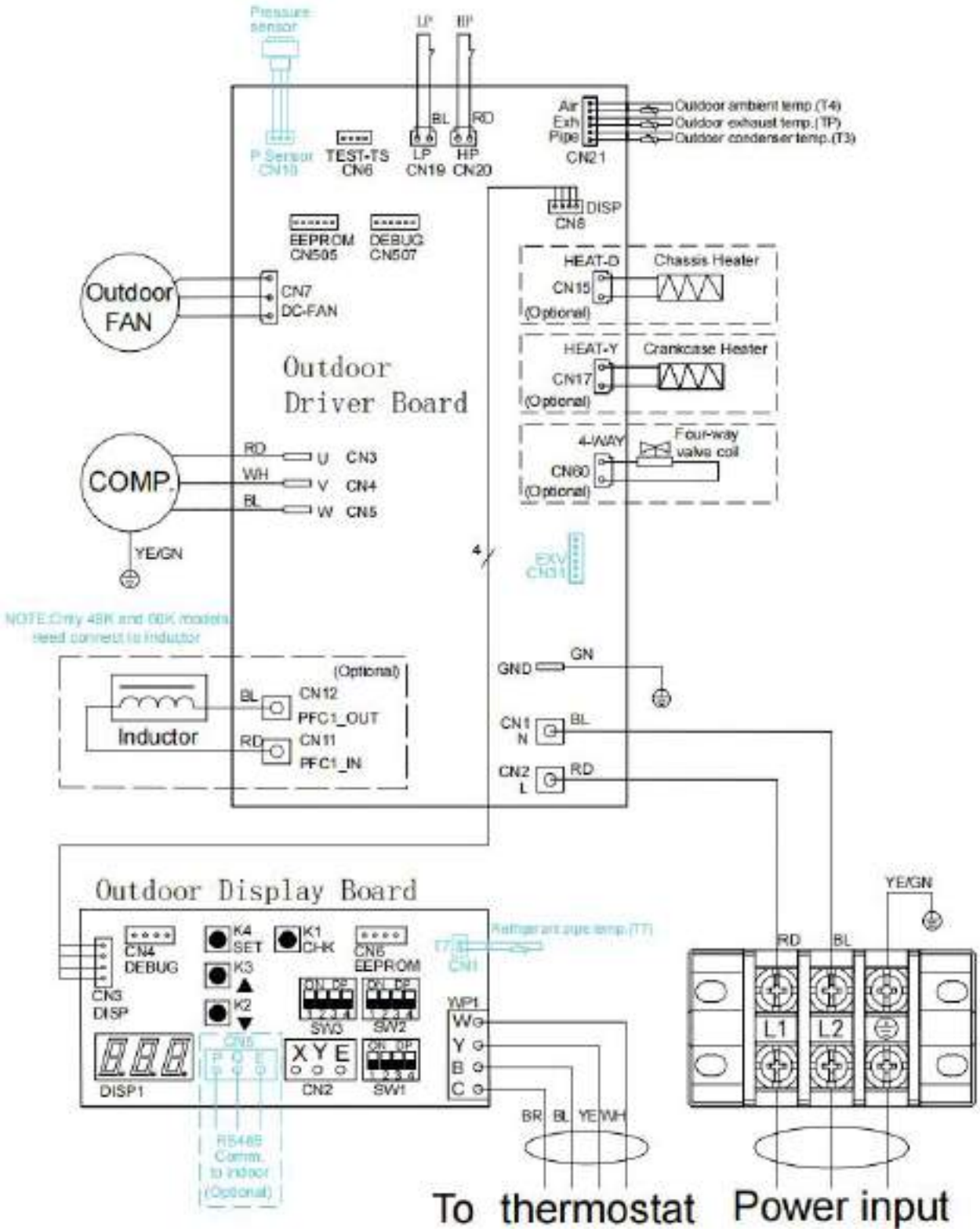

2 PCB

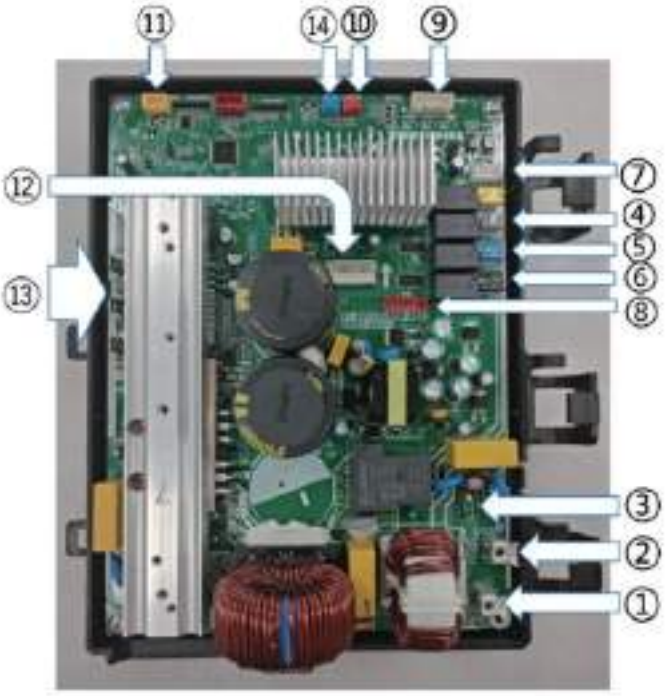

No.	Functional description
1	Power supply input L(L1)
2	Power supply input N(L2)
3	Ground wire
4	Crankshaft heating port
5	Four-way valve port
6	Solenoid Valve port
7	Display board ports
8	Electronic expansion valve port
9	T3 T4 TP sensor port
10	High pressure protection switch port
11	Pressure sensor port
12	DC motor port
13	Compressor port U V W
14	Low pressure protection switch port

24/36K Outdoor Main Control Board

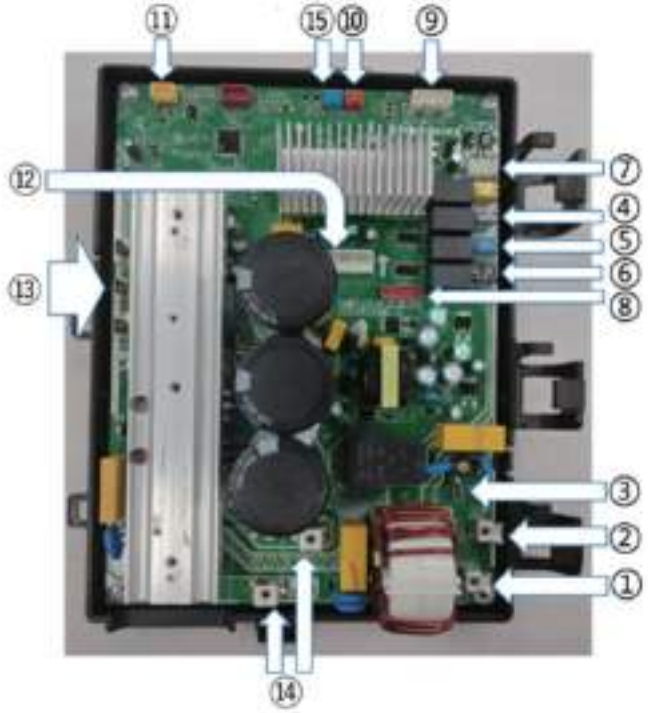

No.	Functional description
1	Power supply input L(L1)
2	Power supply input N(L2)
3	Ground wire
4	Crankshaft heating port
5	Four-way valve port
6	Solenoid Valve port
7	Display board ports
8	Electronic expansion valve port
9	T3 T4 TP sensor port
10	High pressure protection switch port
11	Pressure sensor port
12	DC motor port
13	Compressor port U V W
14	Reactor port
15	Low pressure protection switch port

48/60K Outdoor Main Control Board



No. Function description

1 Communicaition port to main board
2 Port for program update
3 Port for EEPROM update
4 Dip Switch SW1
5 24V communication port
6 Dip Switch SW2
7 Dip Switch SW3
8 Port for wired controller
9 RS-485 communication port
10 LED dispaly
K1~K4 Button for checking or setting

Display Board (Communicaition board)

Definition and uses of the button

K1: Press “K1” once to enter the outdoor unit parameter inspection.
K2: Press “K2” to view the parameters in sequence.
K3: Press “K3” to view the parameters in reverse order.
K4: "SET” button used to enter forced cooling mode to recover the refrigerant.

Definition of SW1~SW3

Wire Color Code				DIP switch status Indicate		Outdoor Display Board SW1 DIP switch selection			Outdoor Display Board SW2 DIP switch selection		
RD RED	OR ORANGE			ON □ OFF ■ 1	This Indicate OFF (The DIP switch is dialed to the digital side)	SW1.1	OFF	24V Control	SW2.1	OFF	Auto Defrosting
BL BLUE	GN GREEN						ON	RS485 Comm. Mode		ON	Periodically Defrosting
BR BROWN	GY GRAY					SW1.2	OFF	°F for Fahrenheit	SW2.2	OFF	Defrost interval 60 minutes
BK BLACK	YE YELLOW			ON ■ OFF □ 1	This Indicate ON (The DIP switch is dialed to the non-digital side)		ON	°C for Celsius		ON	Defrost interval 30 minutes
WH WHITE	PR PURPLE					SW1.3	OFF	Heating and cooling	SW2.3	OFF	Normal Defrosting
							ON	Single-cooled		ON	Accelerate Defrosting
						SW1.4	OFF	Normal Cooling	SW2.4	OFF	Normal Thermostat
							ON	Accelerate Cooling		ON	O/B Thermostat

Outdoor Display Board SW3 DIP switch selection			
SW3.1	SW3.2	SW3.3	Models
OFF	OFF	OFF	18K
OFF	OFF	ON	24K
OFF	ON	OFF	30K
OFF	ON	ON	36K
ON	OFF	OFF	48K
ON	OFF	ON	60K
SW3.4	OFF	Normal Heating	
	ON	Accelerate Heating	

3 Low voltage wiring diagram

The following wiring diagram are suitable for the Indoor Unit and Outdoor Unit with 24V thermostat.

Wiring for 1H and 1C thermostat (no heat pump system model)

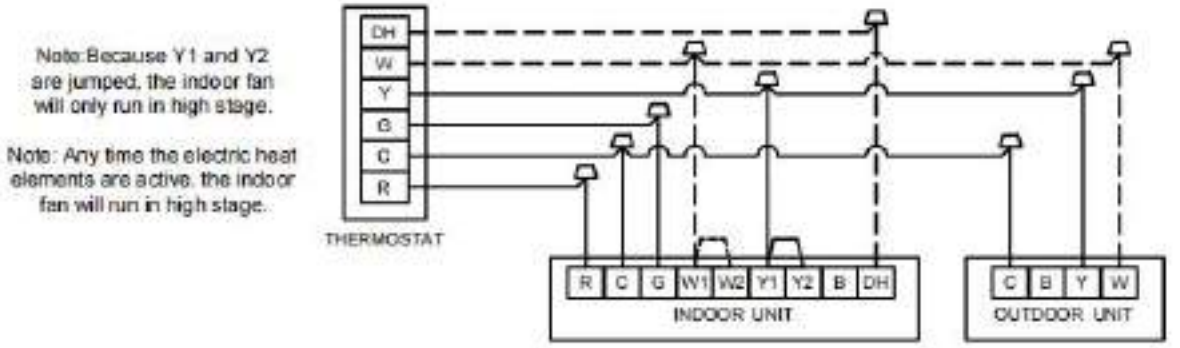

Wiring for 1H and 1C thermostat (no heat pump system model)

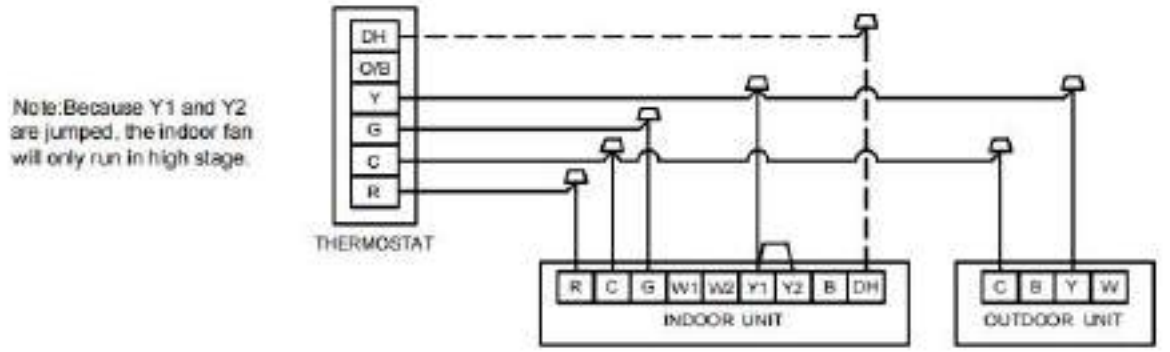

Wiring for 2H and 1C thermostat (no heat pump system model)

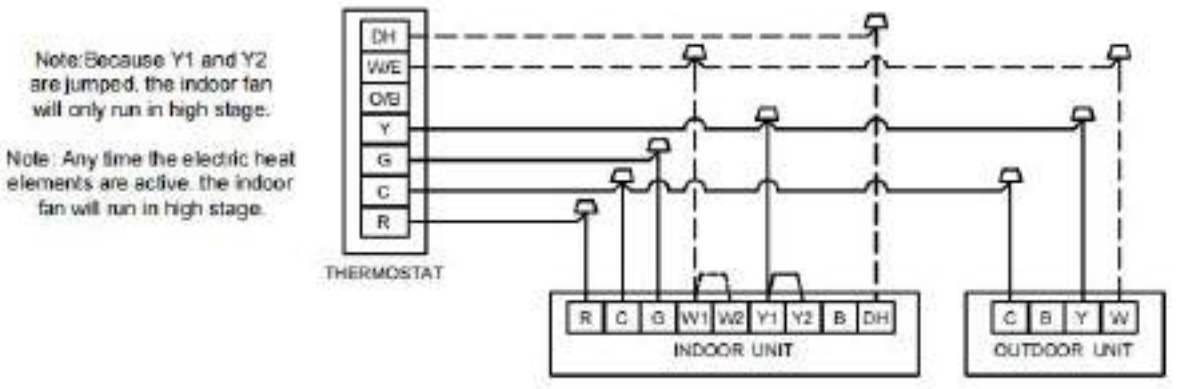

Wiring for 2H and 2C thermostat (no heat pump system model)

Note:Y1 and Y2 here represents 2 stages of fan cooling only, the compressor modulates separately from the fan.

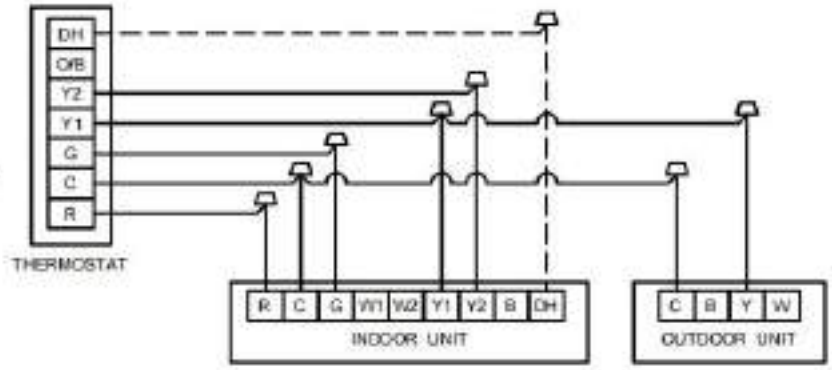

Wiring for 3H and 1C thermostat (no heat pump system model)

Note:Because Y1 and Y2 are jumped, the indoor fan will only run in high stage.

Note: Any time the electric heat elements are active, the indoor fan will run in high stage.

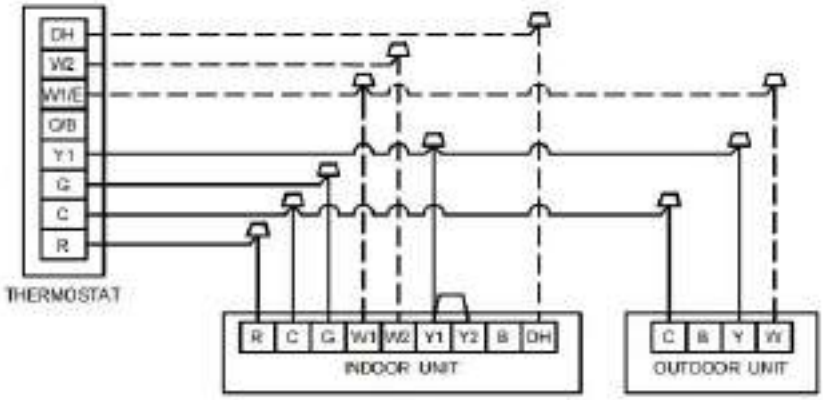

Wiring for 3H and 2C thermostat (no heat pump system model)

Note:Y1 and Y2 here represents 2 stages of fan cooling only, the compressor modulates separately from the fan.

Note: Any time the electric heat elements are active, the indoor fan will run in high stage.

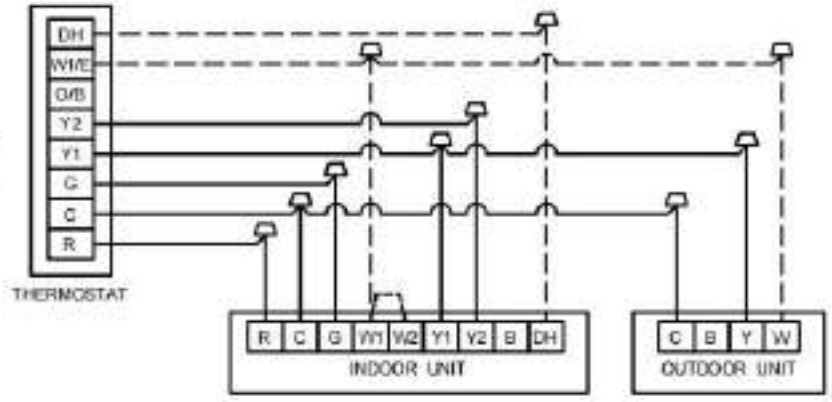

Wiring for 4H and 2C thermostat (no heat pump system model)

Note:Y1 and Y2 here represents 2 stages of fan cooling only, the compressor modulates separately from the fan.

Note: Any time the electric heat elements are active, the indoor fan will run in high stage.

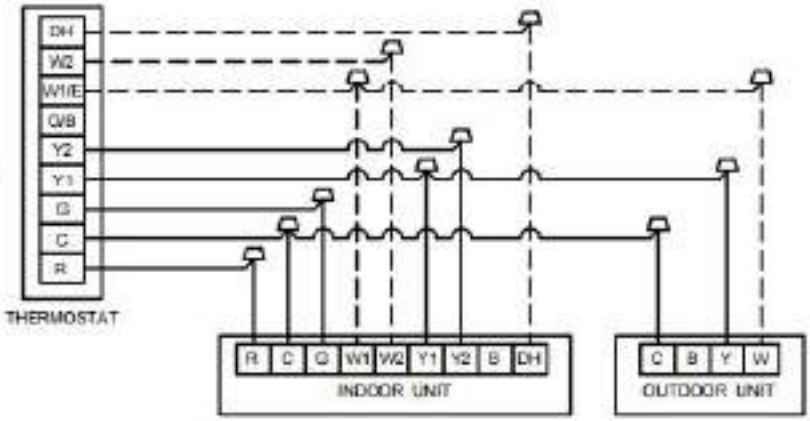

Heat Pump System Model

Wiring for 1H and 1C thermostat (heat pump system model)

Note:Because Y1 and Y2 are jumped, the indoor fan will only run in high stage.

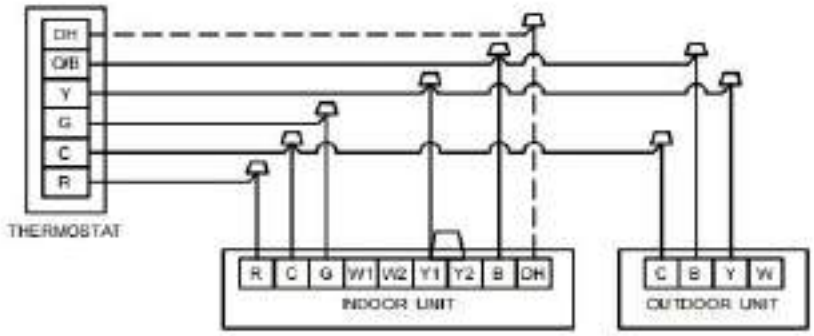

Wiring for 2H and 1C thermostat (heat pump system model)

Note:Because Y1 and Y2 are jumped, the indoor fan will only run in high stage.

Note: Any time the electric heat elements are active, the indoor fan will run in high stage.

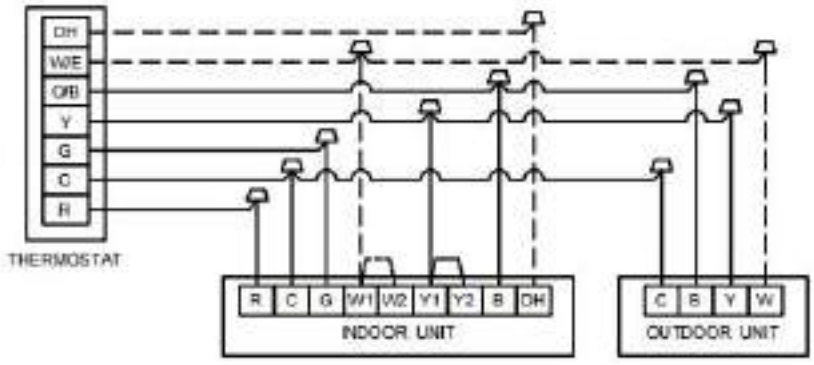

Wiring for 2H and 2C thermostat (heat pump system model)

Note:Y1 and Y2 here represents 2 stages of fan cooling only, the compressor modulates separately from the fan.

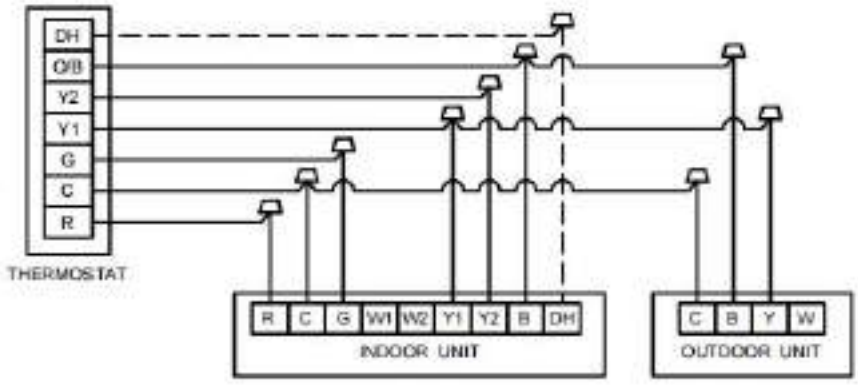

Wiring for 3H and 1C thermostat (heat pump system model)

Note:Because Y1 and Y2 are jumped, the indoor fan will only run in high stage.

Note: Any time the electric heat elements are active, the indoor fan will run in high stage.

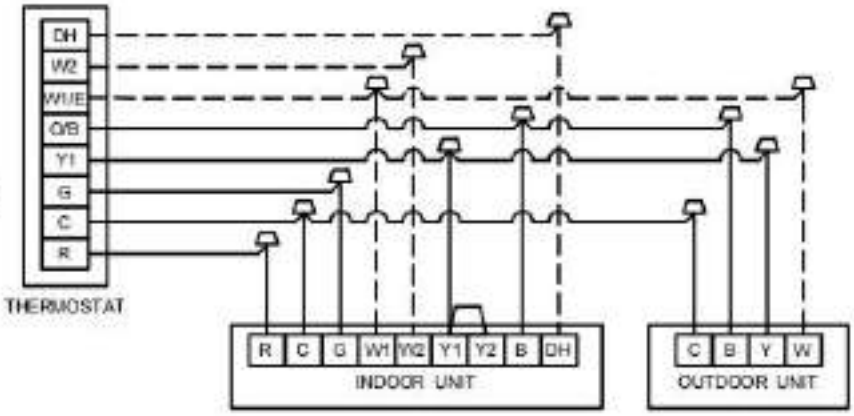

Wiring for 3H and 2C thermostat (heat pump system model)

Note:Y1 and Y2 here represents 2 stages of fan cooling only, the compressor modulates separately from the fan.

Note: Any time the electric heat elements are active, the indoor fan will run in high stage.

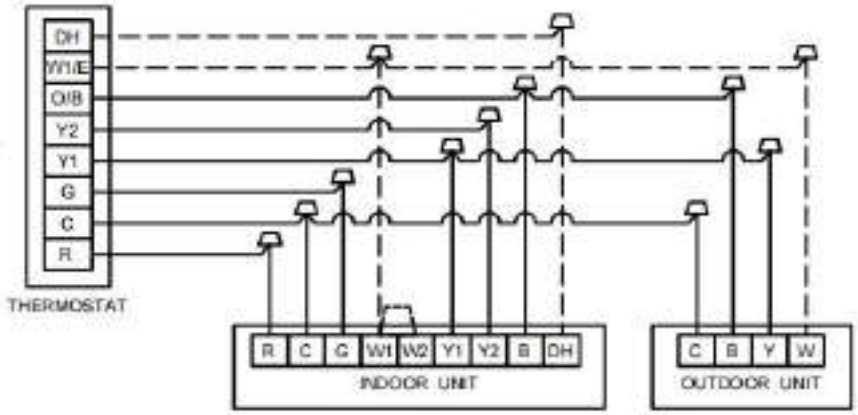

Wiring for 4H and 2C thermostat (heat pump system model)

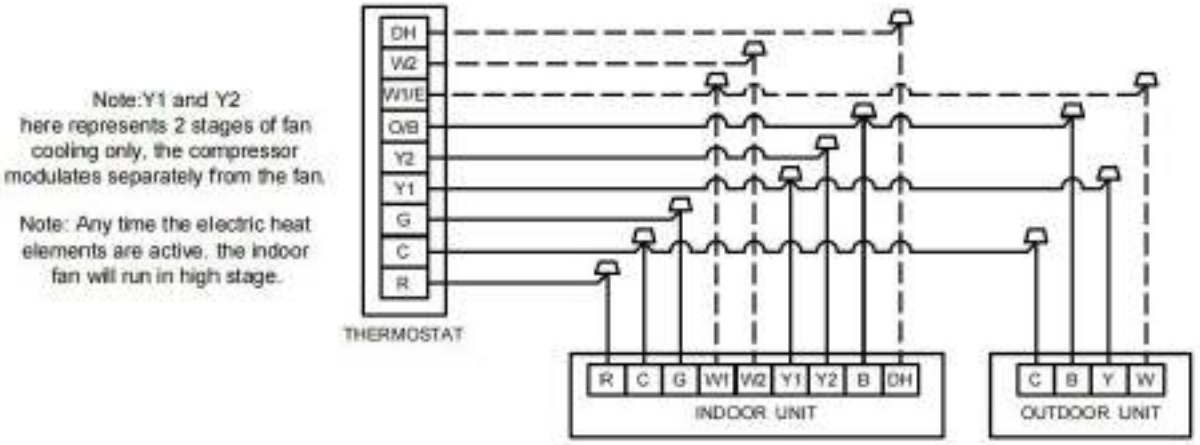

Control Logic：

Indoor unit connector

Connector	Purpose
R	24V Power Connection
C	Common
G	Fan Control
Y1	Low Cooling
Y2	High Cooling
B	Heating Reversing Valve
W1	Stage 1 Electric Heating
W2	Stage 2 Electric Heating
DH	Dehumidification

Outdoor unit connector

Connector	Purpose
C	Common
Y	Cooling
B	Heating Reversing Valve
W	Defrost control

Note：

1) DH wiring is optional and requires a thermostat with a humidistat. DH functions as Passive Dehumidification and will downstage the indoor fan to first stage. System will operate according to normal sequence of operations if DH wiring is absent.

2) Dashed lines in the above thermostat wiring diagrams refer to optional wiring (wiring for Passive Dehumidification Function and/OR Electric Heat). For thermostat wiring please refer to the Owner's Manual of the thermostat.

3) B wire must be used with heat pump system only, the reversing valve energizes in heating.

Part 4

Diagnosis and Troubleshooting

1 Error code table 17

2 Troubleshooting 19

2.1 Safety Precautions 19

2.2 ATL Troubleshooting 22

2.3 E1/F0 Troubleshooting 23

2.4 F4/F5/F6/FC/FE/E2/E3/H8 Troubleshooting 24

2.5 E4 Troubleshooting 25

2.7 E6 Troubleshooting 26

2.7 E8 Troubleshooting 27

2.8 E9 Troubleshooting 28

2.9 FA/FB Troubleshooting 29

2.10 FD Troubleshooting 30

2.11 FF/P1/H2 Troubleshooting 31

2.12 F9/L0/L1 Troubleshooting 32

2.13 P2/H5 Troubleshooting 33

2.14 P3 Troubleshooting 34

2.15 P4/H6 Troubleshooting 35

2.16 P5 Troubleshooting 36

2.17 P6 Troubleshooting 37

2.18 P7/PC Troubleshooting 38

2.19 P8 Troubleshooting 39

2.20 P9 Troubleshooting 40

2.21 H0 Troubleshooting 41

2.22 The outdoor unit is displaying PRH. 41

3. Temperature Sensor Resistance Characteristics 42

1 Error code table

Error code	Error definition
FA	EEPROM fault (on main PCB)
FB	EEPROM fault (on inverter module)
H1	P5 protection appears 3 times in 180 minutes can't be recovered until re-power on
H2	FF protection appears 3 times in 150 minutes can't be recovered until re-power on
H3	PD protection appears 3 times in 180 minutes can't be recovered until re-power on
H4	P8 protection appears 3 times in 120 minutes can't be recovered until re-power on
H5	P2 protection appears 3 times in 240 minutes can't be recovered until re-power on
H6	P4 protection appears 3 times in 100 minutes can't be recovered until re-power on
H7	PC protection appears 3 times in 200 minutes can't be recovered until re-power on
H8	FE protection appears 3 times in 120 minutes can't be recovered until re-power on
HC	F7 protection appears 3 times in 180 minutes can't be recovered until re-power on
HE	F8 protection appears 3 times in 60 minutes can't be recovered until re-power on
H0	Inverter module and main PCB communication error
L0	DC bus low voltage protection
L1	DC bus high voltage protection
FF	High pressure switch fault for 20 minutes
P1	High pressure switch fault for 4 seconds
P2	Low pressure protection in cooling mode
P3	Over current protection
P4	Discharge temperature protection
P5	T3 high temperature protection in cooling mode
P6	Compressor inverter module protection
P7	Indoor unit anti-freezing protection(Applicable only when communication is established between the ComfortStar outdoor unit and the ComfortStar indoor unit via RS485)
P8	IPM high temperature protection
P9	Fan motor inverter module protection
PC	Overwet operation protection(Applicable only when communication is established between the ComfortStar outdoor unit and the ComfortStar indoor unit via RS485)
PD	High pressure protection in heating mode
F0	Outdoor unit and indoor unit communication error
F4	T4 - Ambient temperature sensor fault
F5	TP - Discharge temperature sensor fault
F6	T3 - Coil temperature sensor fault
F7	T7 temperature sensor fault (not applicable for cooling only unit)
F8	Reserved
F9	AC voltage is too high or too low protection
FC	IPM temperature sensor fault
FD	Pressure sensor fault

FE	T3/TP temperature sensor loose protection
E1	Outdoor unit and indoor unit communication error (Applicable only when communication is established between the ComfortStar outdoor unit and the ComfortStar indoor unit via RS485)
E2	Indoor unit T1 temperature sensor fault (Applicable only when communication is established between the ComfortStar outdoor unit and the ComfortStar indoor unit via RS485)
E3	Indoor unit T2 temperature sensor fault (Applicable only when communication is established between the ComfortStar outdoor unit and the ComfortStar indoor unit via RS485)
E4	Refrigerant concentration sensor fault (Applicable only when communication is established between the ComfortStar outdoor unit and the ComfortStar indoor unit via RS485)
E6	Refrigerant leakage protection (Applicable only when communication is established between the ComfortStar outdoor unit and the ComfortStar indoor unit via RS485)
E8	Indoor fan motor current fault (Applicable only when communication is established between the ComfortStar outdoor unit and the ComfortStar indoor unit via RS485)
E9	Wired controller communication fault (Applicable only when communication is established between the ComfortStar outdoor unit and the ComfortStar indoor unit via RS485)
ATL	Ambient temperature out of bounds protection
PRH	Crankcase forced preheating for 1 hour, can not start up the system during this time

2 Troubleshooting

2.1 Safety Precautions

The following precautions here are quite important, so be sure to follow them carefully. Read these instructions carefully before installation. Keep this manual in a handy for future preference.

Failure to adhere to all precautionary measures listed in this section may result in personal injury, damage to the unit or to property, or in extreme cases, death.

WARNING

- Indicates a potentially hazardous situation which if not avoided, could result in death or serious injury.

CAUTION

- Indicates a potentially hazardous situation which if not avoided, may result in minor or moderate injury.
- It is also used to alert against unsafe practices.

2.1.1 In case of Accidents or Emergency

WARNING

- If a gas leak is suspected, immediately turn off the gas and ventilate the area if a gas leak is suspected before turning the unit on.
- If strange sounds or smoke is detected from the unit, turn the breaker off and disconnect the power supply cable.
- If the unit comes into contact with liquid, contact an authorized service center.
- If liquid from the batteries makes contact with skin or clothing, immediately rinse or wash the area well with clean water.
- Do not insert hands or other objects into the air inlet or outlet while the unit is plugged in.
- Do not operate the unit with wet hands.

CAUTION

- Clean and ventilate the unit at regular intervals when operating it near a stove or near similar devices.
- Do not use the unit during severe weather conditions. If possible, remove the product from the window before such occurrences.

2.1.2 Information servicing(For flammable materials)

WARNING

- Use this unit only on a dedicated circuit.
- Damage to the installation area could cause the unit
- to fall, potentially resulting in personal injury, property damage, or product failure.
- Only qualified personnel should disassemble, install, remove, or repair the unit.
- Only a qualified electrician should perform electrical work. For more information, contact your dealer, seller, or an authorized service center.

CAUTION

- While unpacking be careful of sharp edges around the unit as well as the edges of the fins on the condenser and evaporator.

2.1.3 Operation and Maintenance

WARNING

- Do not use defective or under-rated circuit breakers.
- Ensure the unit is properly grounded and that a dedicated circuit and breaker are installed.
- Do not modify or extend the power cable. Ensure the power cable is secure and not damaged during operation.
- Do not unplug the power supply plug during operation.
- Do not store or use flammable materials near the unit.
- Do not open the inlet grill of the unit during operation.
- Do not touch the electrostatic filter if the unit is equipped with one.
- Do not block the inlet or outlet of air flow to the unit.
- Do not use harsh detergents, solvents, or similar items to clean the unit. Use a soft cloth for cleaning.
- Do not touch the metal parts of the unit when removing the air filter as they are very sharp.
- Do not step on or place anything on the unit or outdoor units.
- Do not drink water drained from the unit.
- Avoid direct skin contact with water drained from the unit.

- Use a firm stool or step ladder according to manufacturer procedures when cleaning or maintaining the unit.

CAUTION

- Do not install or operate the unit for an extended period of time in areas of high humidity or in an environment directly exposing it to sea wind or salt spray.
- Do not install the unit on a defective or damaged installation stand, or in an unsecured location.
- Ensure the unit is installed at a level position
- Do not install the unit where noise or air discharge
- Created by the outdoor unit will negatively impact the environment or nearby residences.
- Do not expose skin directly to the air discharged by the unit for prolonged periods of time.
- Ensure the unit operates in areas water0r other liquids.
- Ensure the drain hose is installed correctly to ensure proper water drainage.
- When lifting or transporting the unit, it is recommended that two or more people are used for this task.
- When the unit is not to be used for an extended time, disconnect the power supply or turn off the breaker.

2.2 ATL Troubleshooting

- ATL indicates ambient temperature out of bounds protection.
- The unit stops running and will not start operating until the ambient temperature returns to the allowable temperature range, error code is displayed on the communication board.
- The allowable ambient temperature range is 5~125℉(-15~52℃).

2.3 E1/F0 Troubleshooting

- E1 indicates RS485 communication fault between outdoor unit and indoor unit(from indoor side).
- F0 indicates RS485 communication fault between outdoor unit and indoor unit(from outdoor side).
- The unit stops running and error code is displayed on the communication board

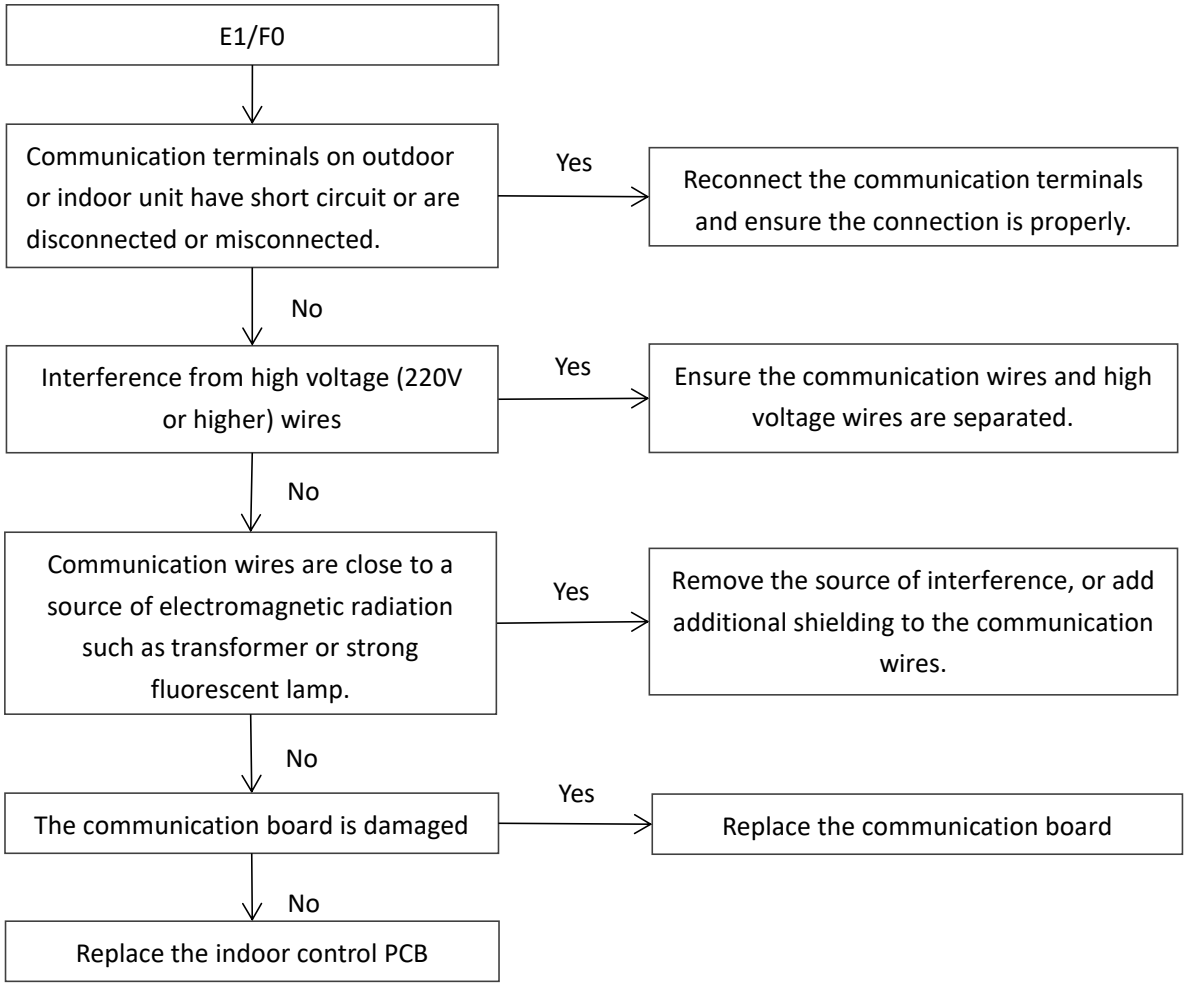

2.4 F4/F5/F6/FC/FE/E2/E3/H8 Troubleshooting

- E2 indicates indoor unit T1 temperature sensor fault
- E3 indicates indoor unit T2 temperature sensor fault
- F4 indicates ambient temperature sensor fault
- F5 indicates discharge temperature sensor fault
- F6 indicates coil temperature sensor fault
- FC indicates IPM temperature sensor fault
- FE indicates T3/TP temperature sensor loose protection
- F7 indicates T7 temperature sensor fault
- H8 indicates FE protection appears 3 times in 120 minutes can't be recovered until re-power on.
- The unit stops running and error code is displayed on the communication board

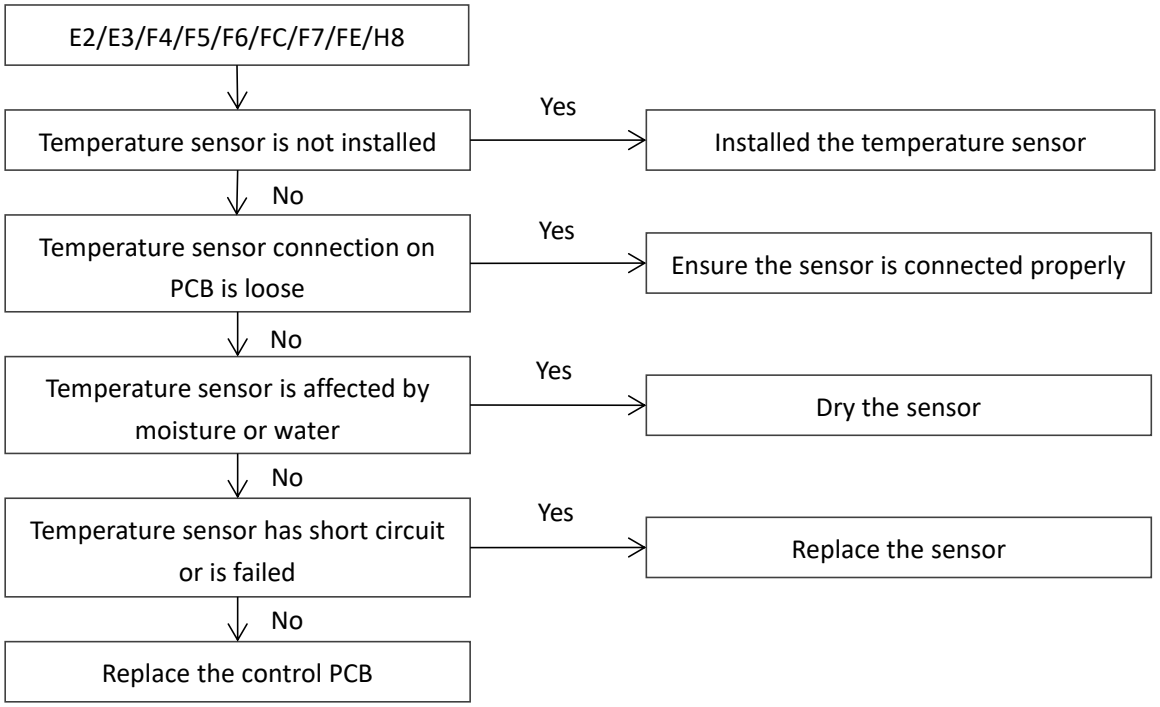

Note:

1) Measure sensor resistance. If the resistance is too low, the sensor has short-circuited. If the resistance is not consistent with the sensor's resistance characteristics table, the sensor has failed.

2) E2/E3 is applicable only when communication is established between the ComfortStar outdoor unit and the ComfortStar indoor unit via RS-485.

2.5 E4 Troubleshooting

- E4 indicates refrigerant concentration sensor fault, E4 is applicable only when communication is established between the ComfortStar outdoor unit and the ComfortStar indoor unit via RS-485
- The unit stops running and error code is displayed on the communication board

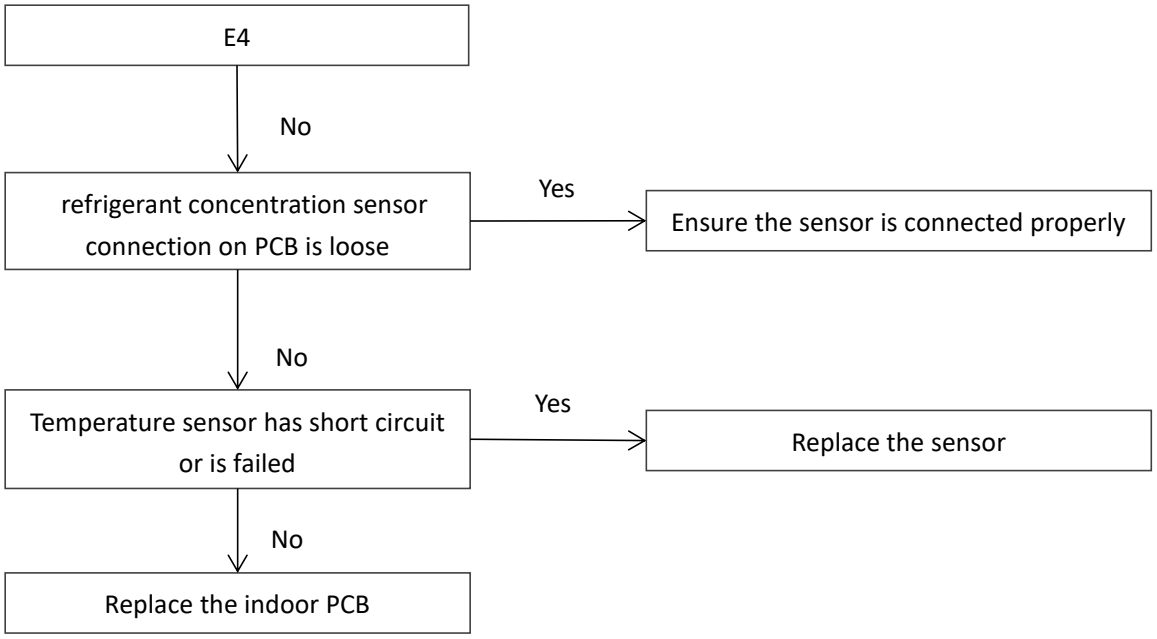

2.7 E6 Troubleshooting

- E8 indicates refrigerant leakage protection , E6 is applicable only when communication is established between the ComfortStar outdoor unit and the ComfortStar indoor unit via RS-485.
- The unit stops running and error code is displayed on the communication board.
- R32 refrigerantR32 refrigerant is a flammable gas. When the E4 fault occurs, first ensure that the ventilation around the indoor unit is good and that the refrigerant concentration is within a safe range.

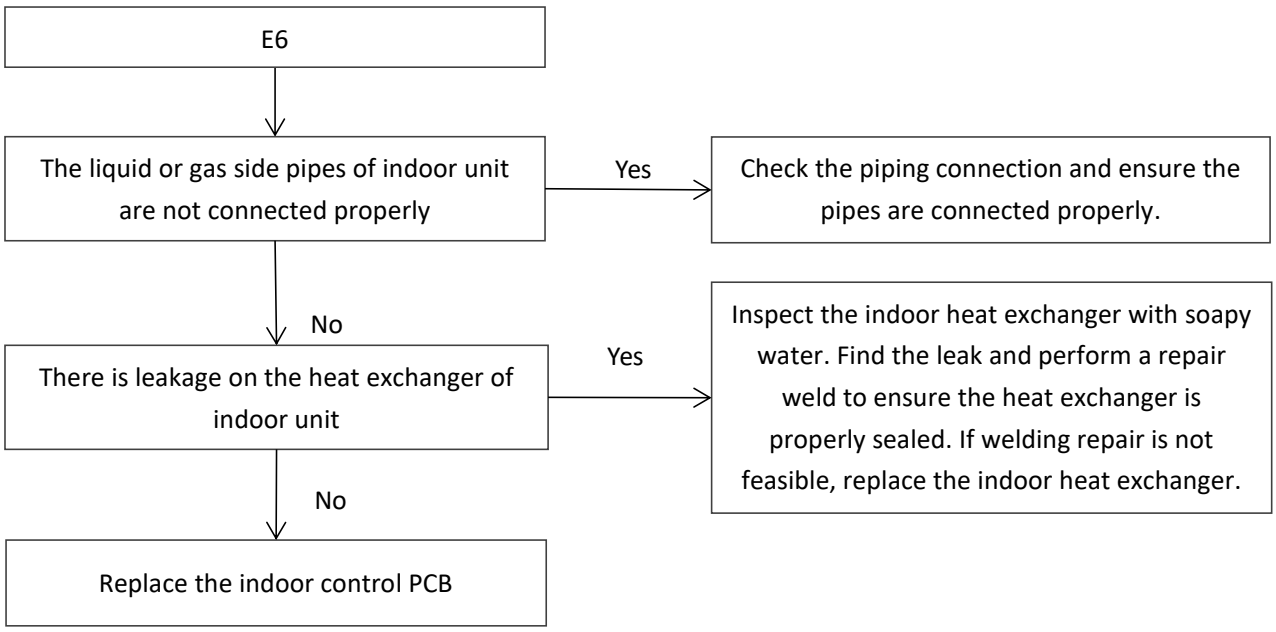

2.7 E8 Troubleshooting

- E8 indicates indoor fan motor current fault, E8 is applicable only when communication is established between the ComfortStar outdoor unit and the ComfortStar indoor unit via RS-485.
- The unit stops running and error code is displayed on the communication board

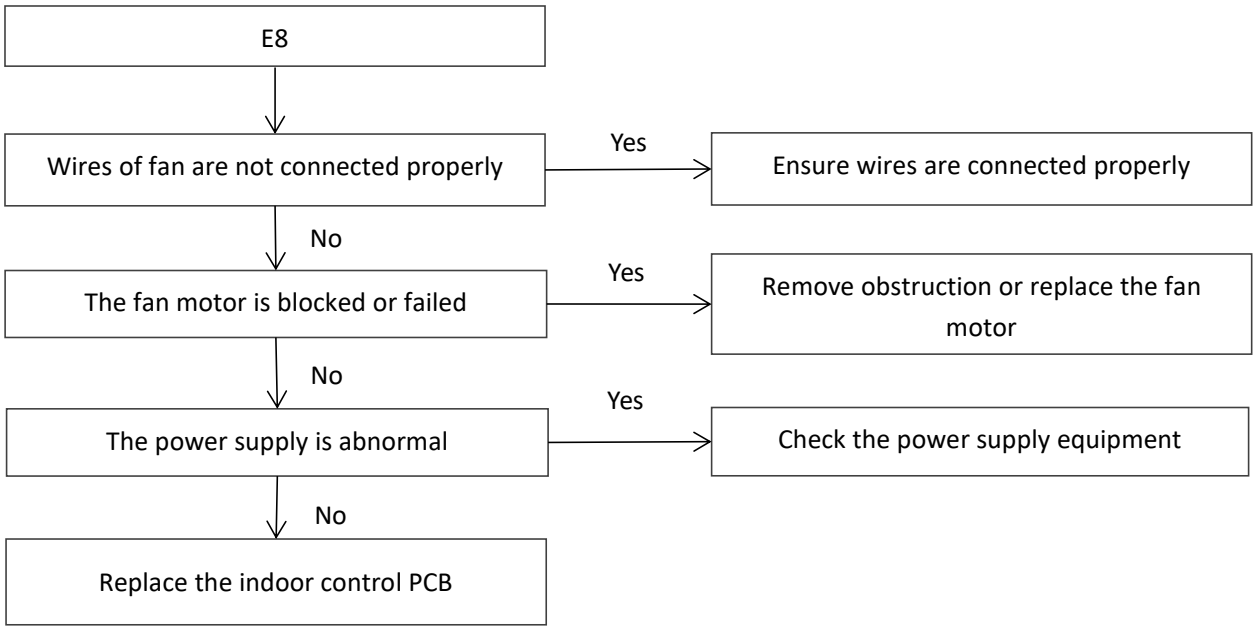

2.8 E9 Troubleshooting

- E9 indicates wired controller communication fault, E9 is applicable only when communication is established between the ComfortStar outdoor unit and the ComfortStar indoor unit via RS485.
- The unit stops running and error code is displayed on the communication board

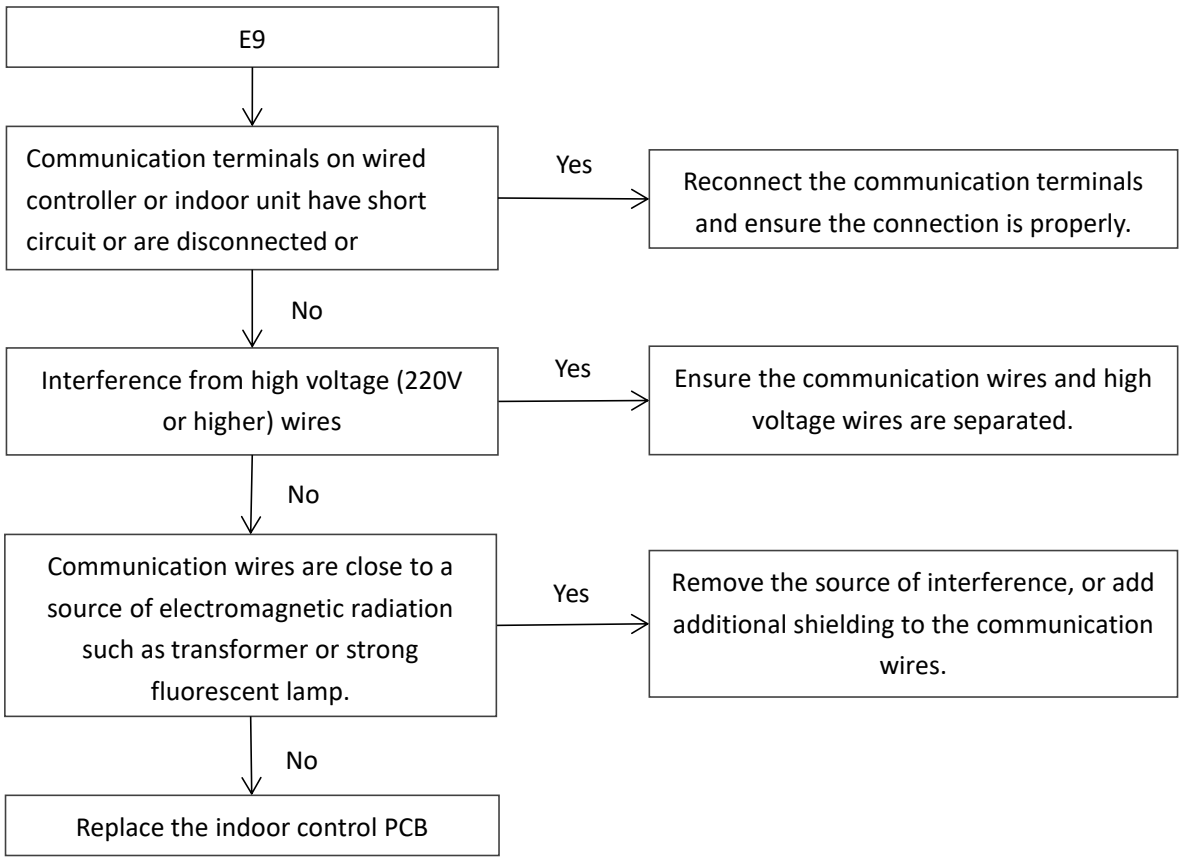

2.9 FA/FB Troubleshooting

- FA indicates EEPROM fault on the main PCB
- FB indicates EEPROM fault on the inverter module
- The unit stops running and error code is displayed on the communication board

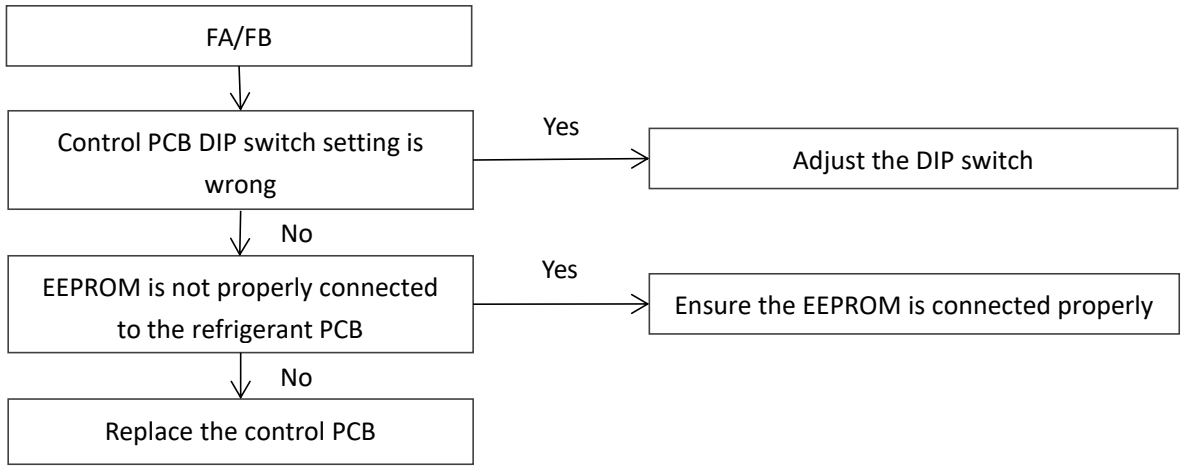

2.10 FD Troubleshooting

- FD indicates pressure sensor fault
- The unit stops running and error code is displayed on the communication board

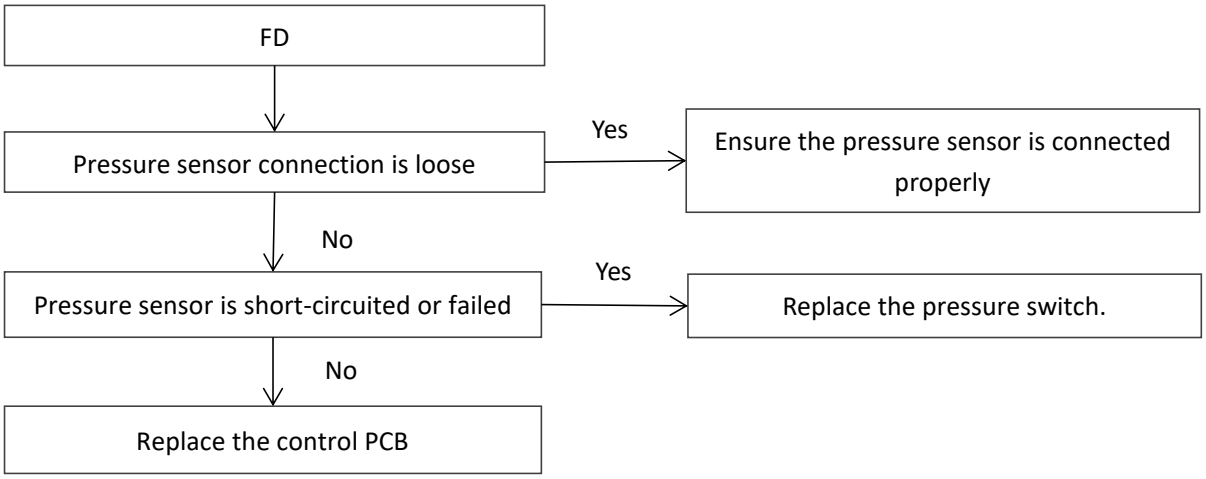

2.11 FF/P1/H2 Troubleshooting

- FF indicates high pressure switch fault for 20 minutes.
- P1 indicates high pressure switch fault for 4 seconds.
- H2 indicates FF protection appears 3 times in 150 minutes can't be recovered until re-power on.
- The unit stops running and error code is displayed on the communication board

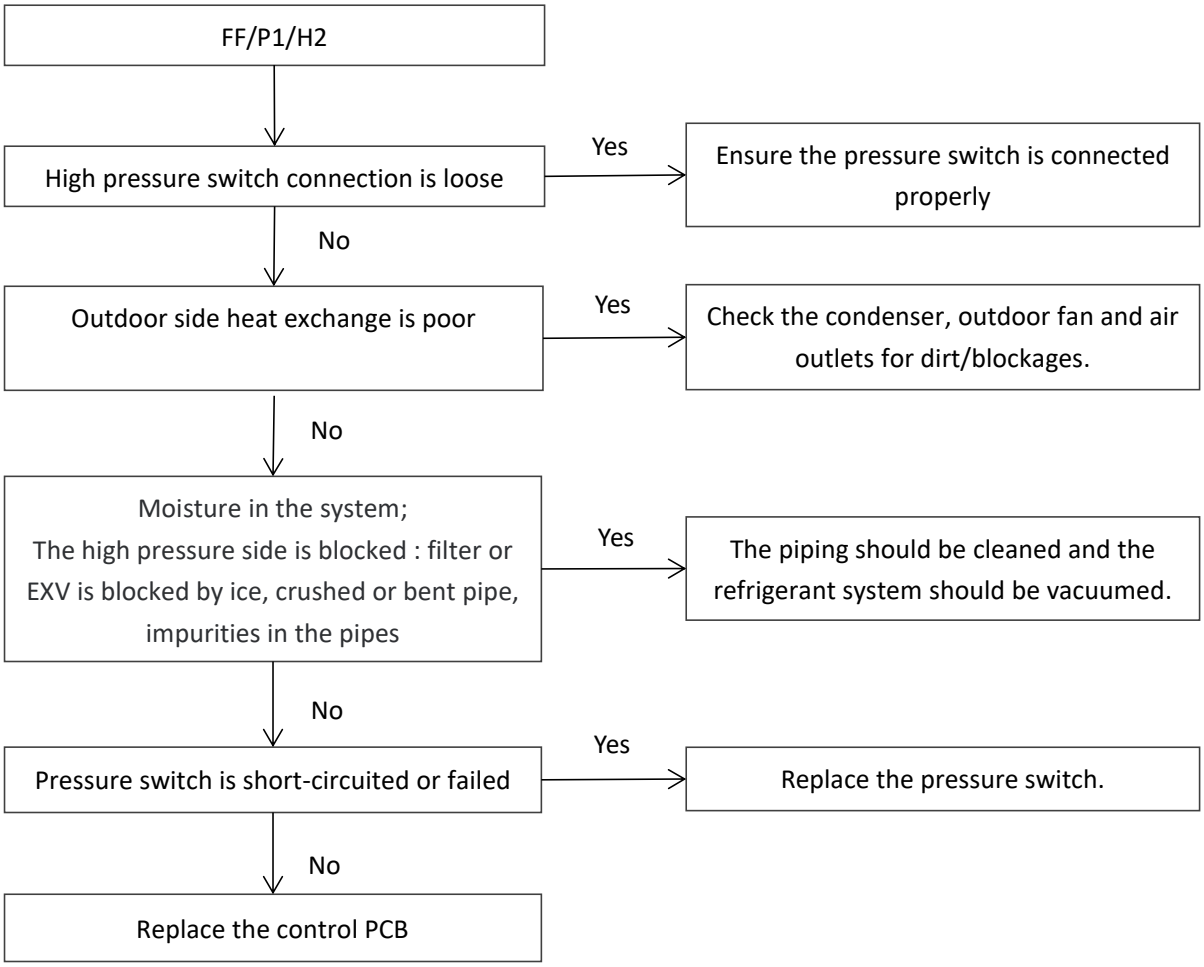

2.12 F9/L0/L1 Troubleshooting

- F9 indicates AC voltage is too high or too low protection
- L0 indicates DC bus low voltage protection
- L1 indicates DC bus high voltage protection

Allowable voltage range of power source	178~265V
Upper limit of DC generatrix voltage	430V
Lower limit of DC generatrix voltage	150V

- The unit stops running and error code is displayed on the communication board

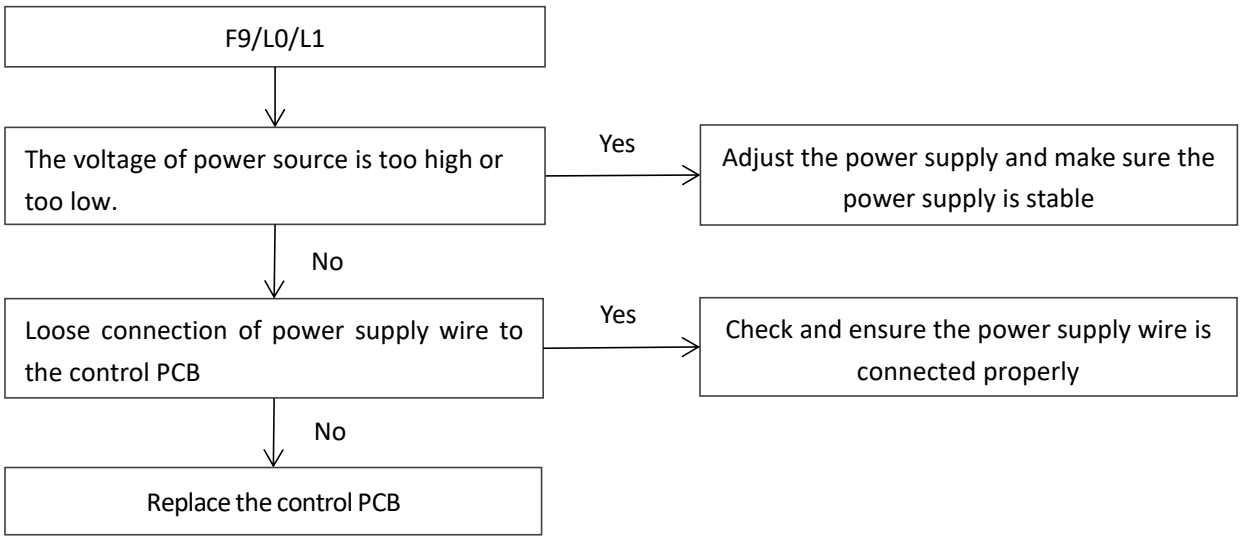

2.13 P2/H5 Troubleshooting

- P2 indicates low pressure protection in cooling mode.
- H5 indicates P2 protection appears 3 times in 240 minutes can't be recovered until re-power on.
- The unit stops running and error code is displayed on the communication board

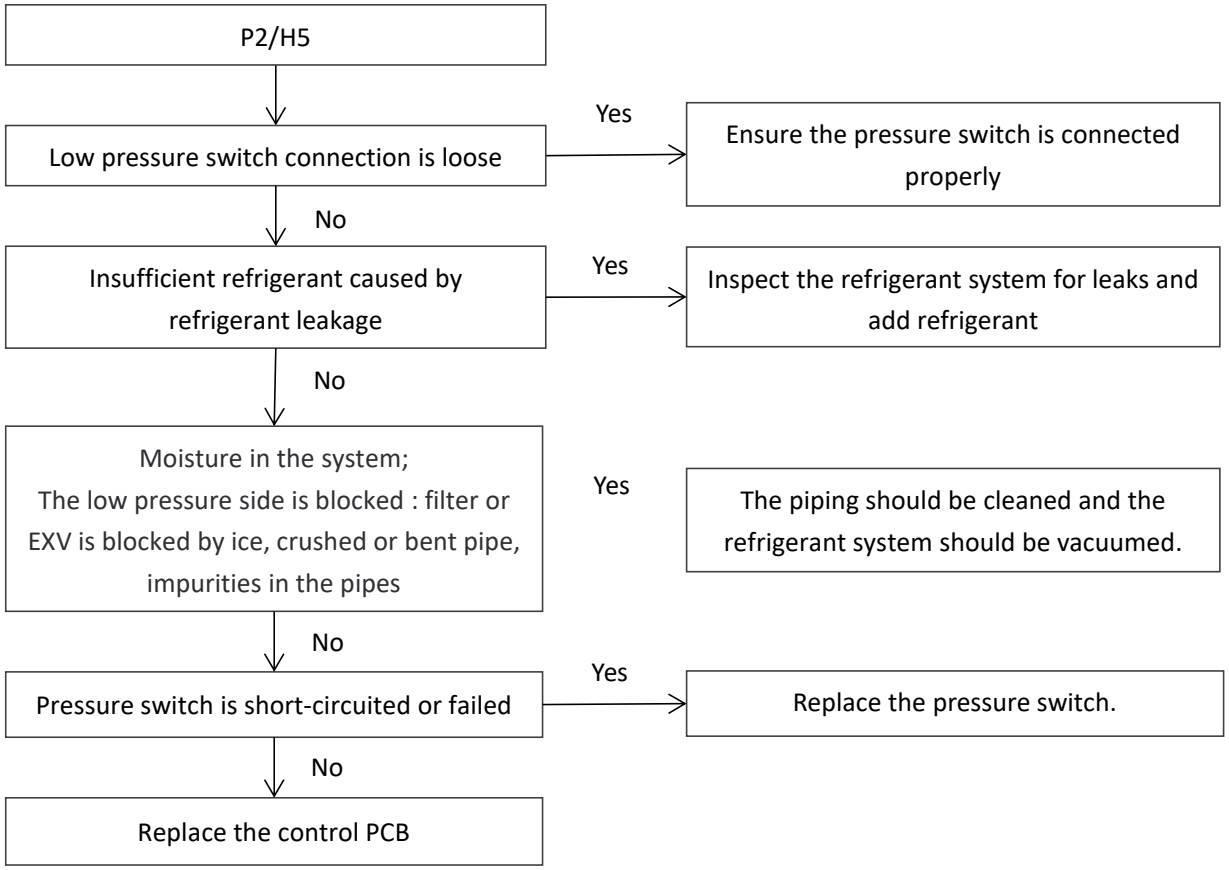

2.14 P3 Troubleshooting

- P3 indicates over current protection
- The unit stops running and error code is displayed on the communication board

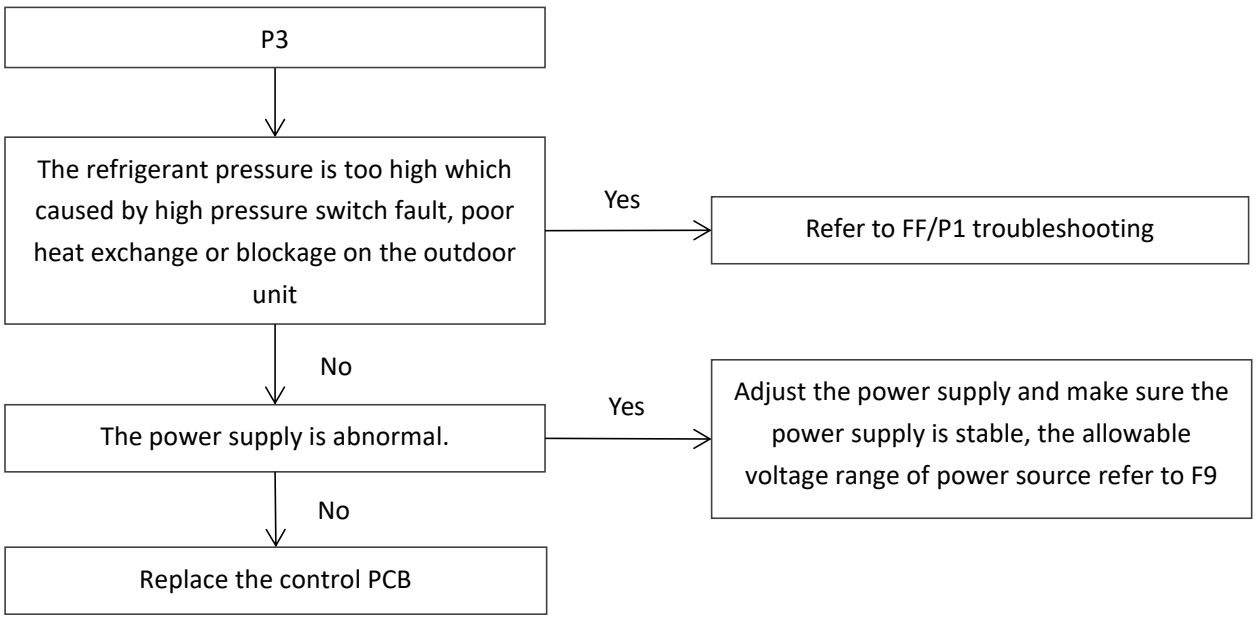

2.15 P4/H6 Troubleshooting

- P4 indicates discharge temperature protection
- H6 indicates P4 protection appears 3 times in 100 minutes can't be recovered until re-power on.
- The unit stops running and error code is displayed on the communication board.

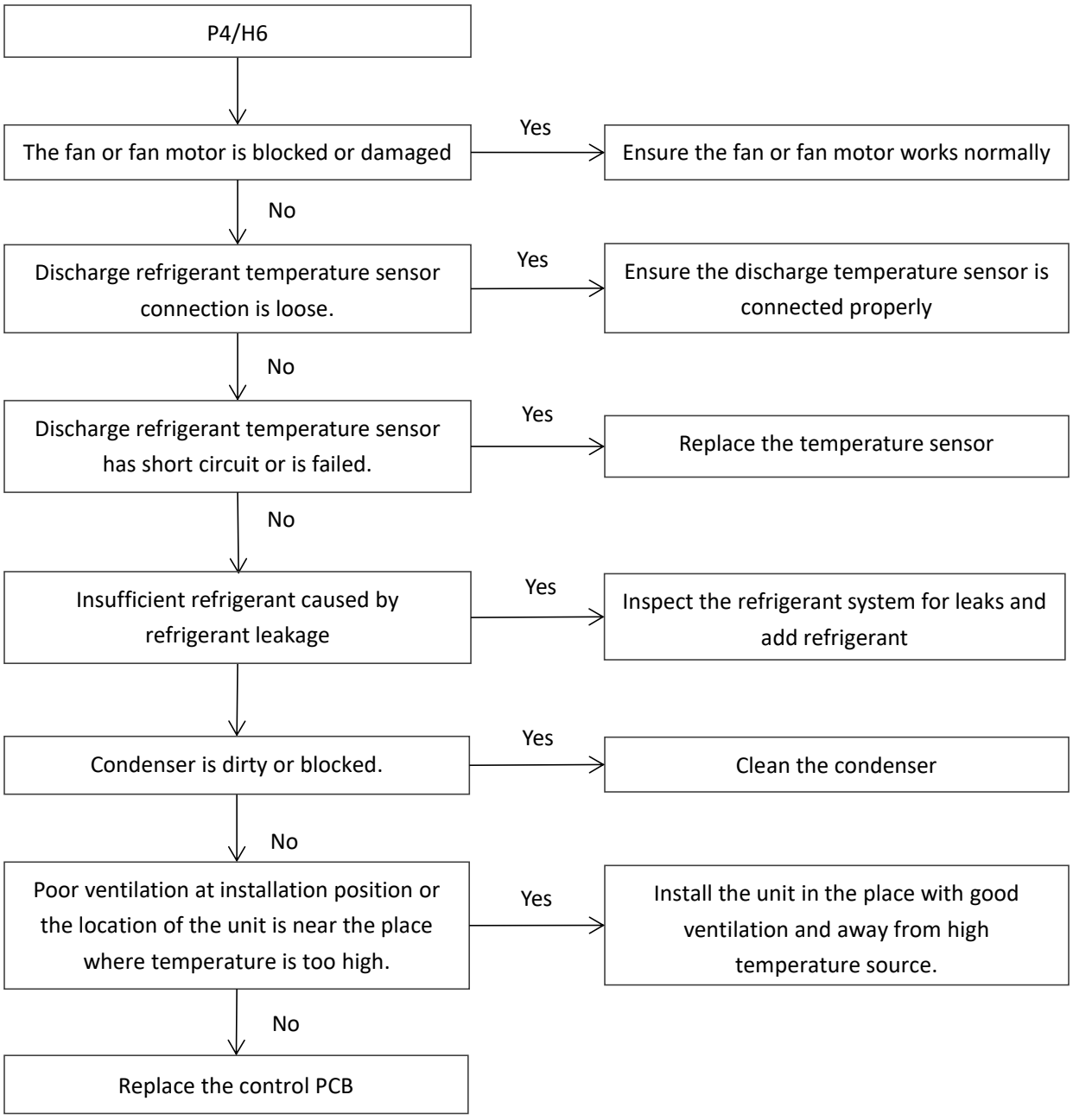

2.16 P5 Troubleshooting

- P5 indicates T3 high temperature protection in cooling mode
- The unit stops running and error code is displayed on the communication board.

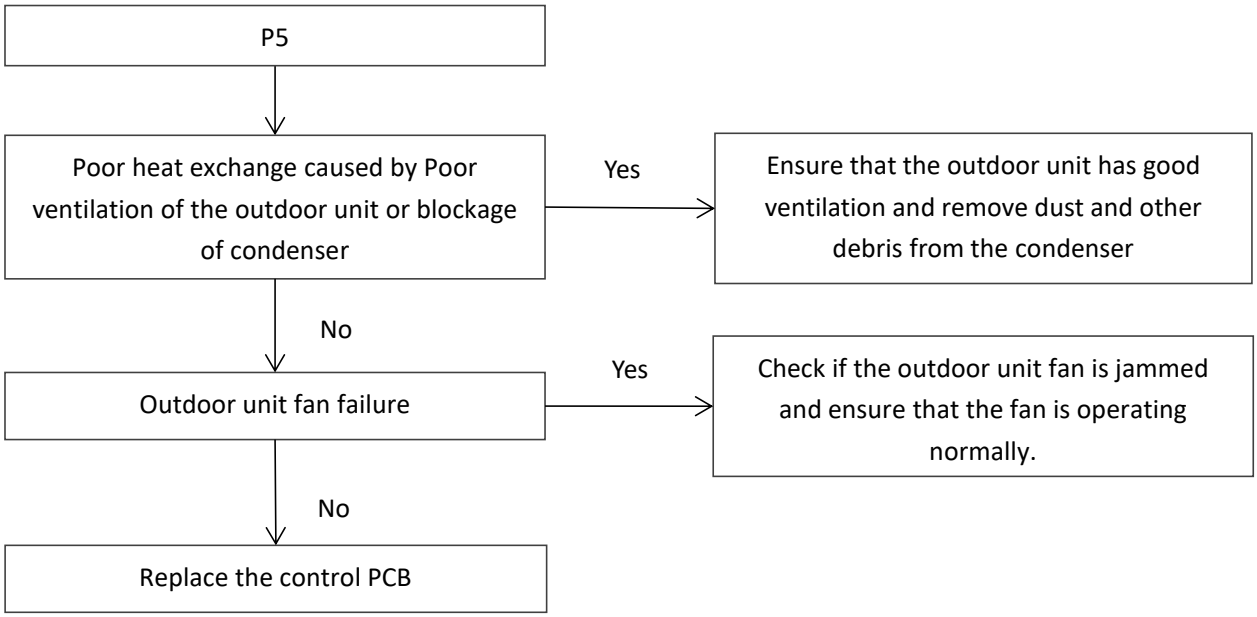

2.17 P6 Troubleshooting

- P6 indicates compressor inverter module protection.
- The unit stops running and error code is displayed on the communication board.

Situation1: P6 appears immediately when the outdoor unit is powered-on

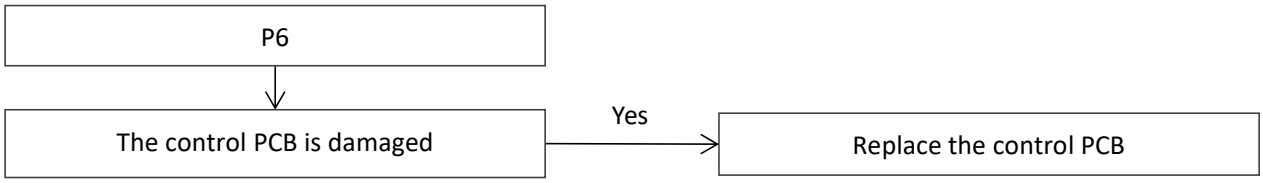

Situation2: P6 appears immediately after the compressor starts up

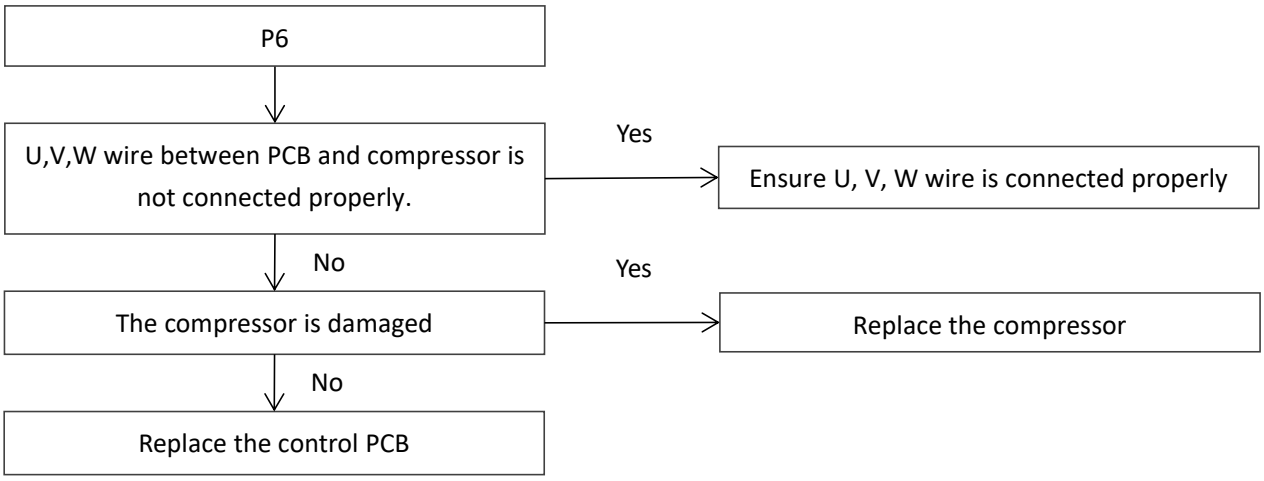

Situation3: P6 appears after the compressor has been running for a period of time.

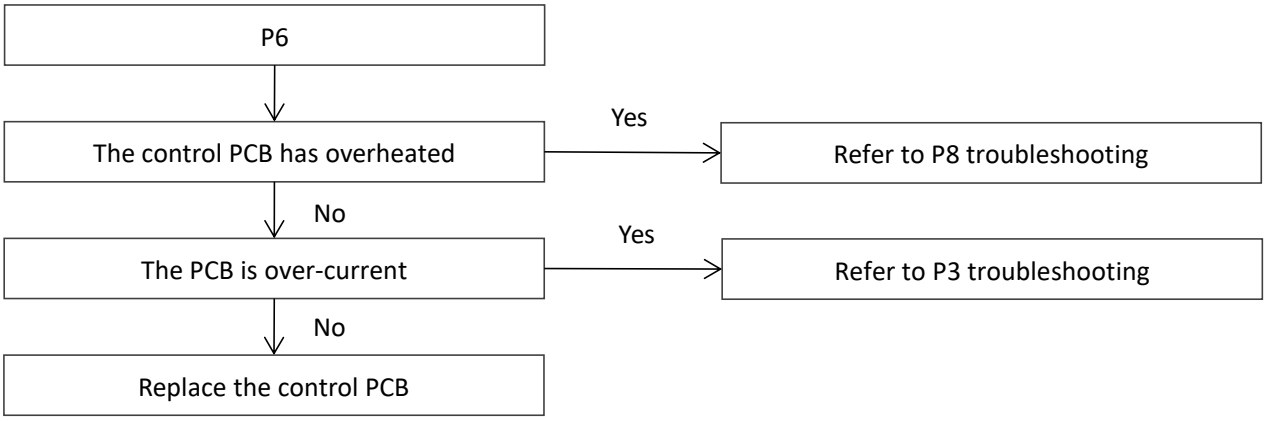

2.18 P7/PC Troubleshooting

- P7 indicates Indoor unit anti-freezing protection.
- PC indicates overwet operation protection.
- The unit stops running and error code is displayed on the communication board.
- P7/PC is applicable only when communication is established between the ComfortStar outdoor unit and the ComfortStar indoor unit via RS485.

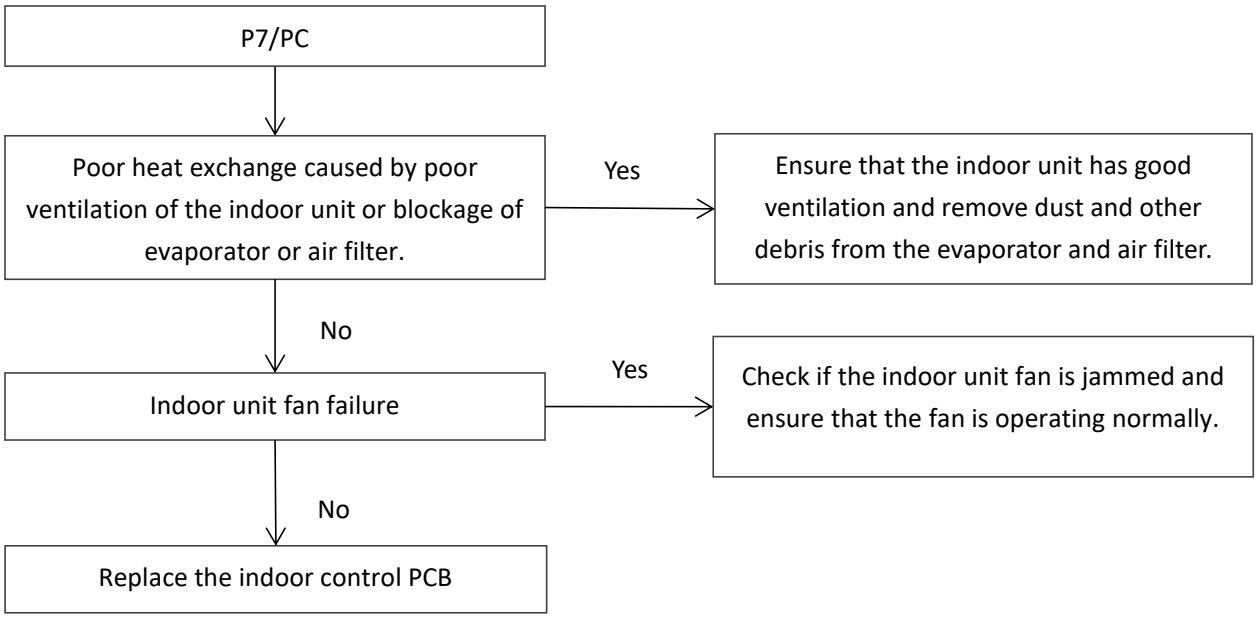

2.19 P8 Troubleshooting

- P8 indicates IPM high temperature protection.
- The unit stops running and error code is displayed on the communication board.

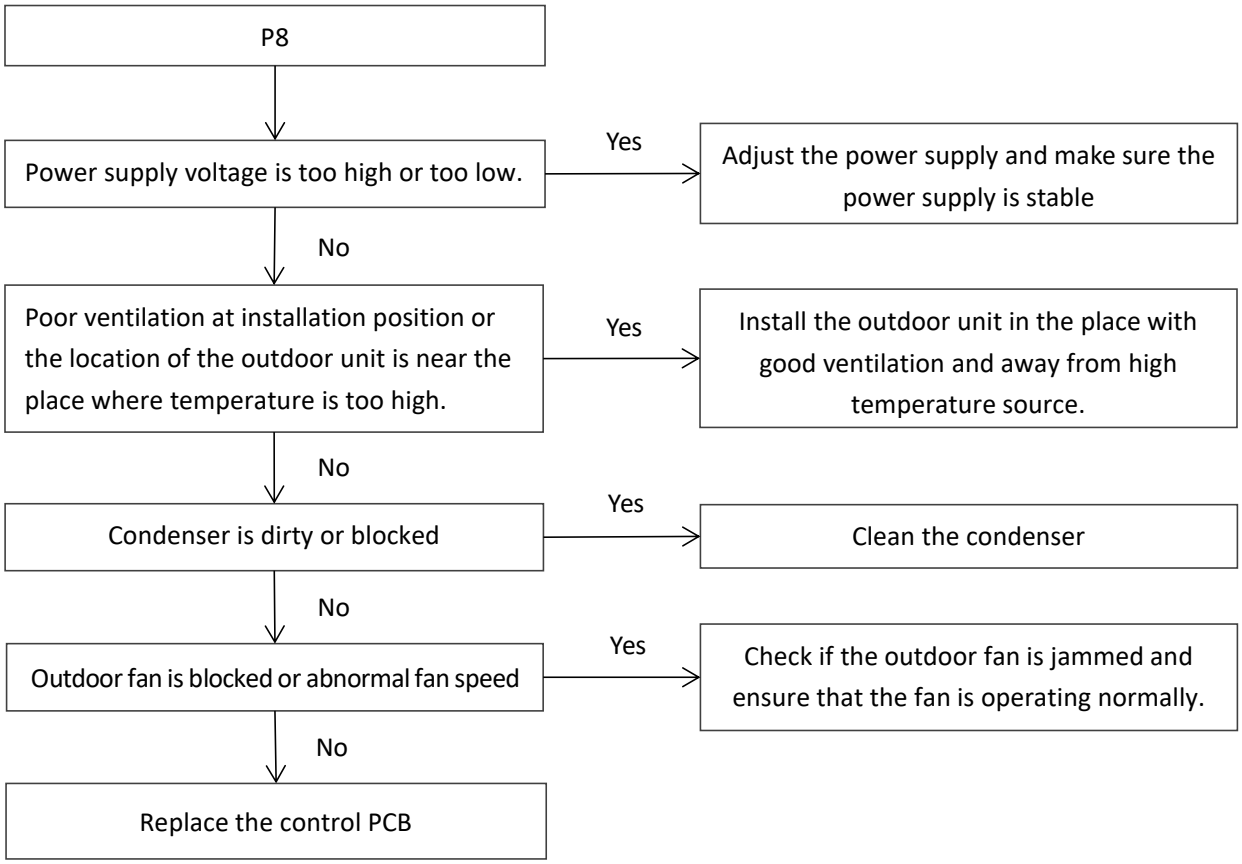

2.20 P9 Troubleshooting

- P9 indicates fan motor inverter module protection
- The unit stops running and error code is displayed on the communication board.

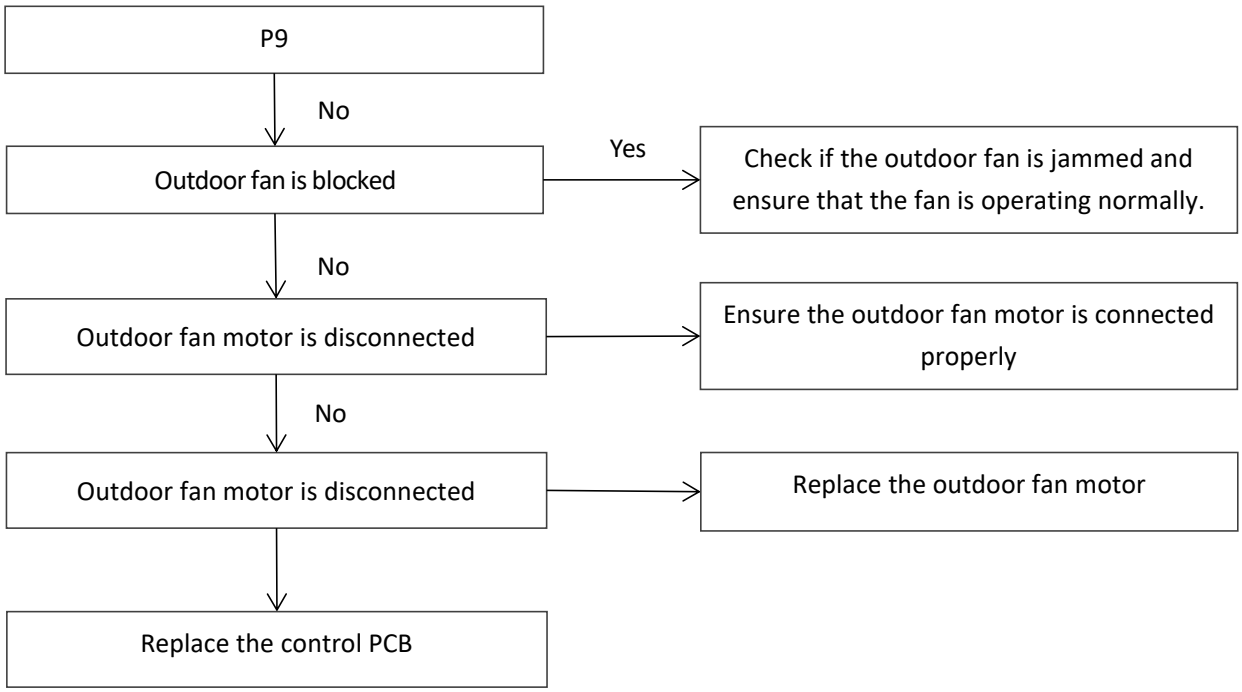

2.21 H0 Troubleshooting

- H0 indicates Inverter module and main PCB communication error
- The unit stops running and error code is displayed on the communication board.

There is only one control PCB in the electric control box which integrates the functions of main control board and inverter module, maintenance personnel has to replace the PCB when H0 fault occurs.

2.22 The outdoor unit is displaying PRH.

- PRH indicates crankcase forced preheating for 1 hour, the unit can not start up during this time, the code is displayed on the communication board.

The purpose of preheating is to protect the compressor from damage caused by insufficient oil, and it is not a product fault. This will only occur when the unit is powered on for the first time. The installer and user simply need to wait for 1 hour until the preheating is completed, after which the unit can start up normally.

3. Temperature Sensor Resistance Characteristics

Room temperature sensor(T1), condenser coil temperature sensor(T2), condenser coil temperature sensor(T3) and outdoor ambient temperature sensor(T4) resistance characteristics.

Temperature	R_{max}	R_{nor}	R_{min}
℃	kΩ	kΩ	kΩ
-25	49.51	47.92	46.38
-24	46.94	45.46	44.02
-23	44.51	43.13	41.79
-22	42.23	40.94	39.69
-21	40.08	38.88	37.71
-20	38.05	36.93	35.84
-19	36.14	35.09	34.07
-18	34.34	33.36	32.40
-17	32.63	31.72	30.83
-16	31.03	30.17	29.34
-15	29.51	28.71	27.93
-14	28.07	27.33	26.60
-13	26.72	26.02	25.34
-12	25.44	24.78	24.15
-11	24.22	23.61	23.02
-10	23.08	22.51	21.95
-9	21.99	21.46	20.93
-8	20.96	20.46	19.97
-7	19.99	19.52	19.06
-6	19.06	18.63	18.20
-5	18.19	17.78	17.38
-4	17.36	16.98	16.61
-3	16.57	16.22	15.87
-2	15.83	15.49	15.17
-1	15.12	14.81	14.50
0	14.45	14.16	13.87
1	13.81	13.54	13.27
2	13.20	12.95	12.70
3	12.63	12.39	12.15
4	12.08	11.85	11.64
5	11.56	11.35	11.14
6	11.06	10.87	10.67
7	10.59	10.41	10.23
8	10.14	9.97	9.80
9	9.71	9.56	9.40
10	9.31	9.16	9.01
11	8.92	8.78	8.65
12	8.55	8.42	8.30
13	8.20	8.08	7.96
14	7.86	7.75	7.64
15	7.55	7.44	7.34

Temperature	R_{max}	R_{nor}	R_{min}
℃	kΩ	kΩ	kΩ
16	7.24	7.14	7.05
17	6.95	6.86	6.77
18	6.67	6.59	6.50
19	6.41	6.33	6.25
20	6.15	6.08	6.01
21	5.91	5.85	5.78
22	5.68	5.62	5.56
23	5.46	5.40	5.35
24	5.25	5.20	5.14
25	5.05	5.00	4.95
26	4.86	4.81	4.76
27	4.68	4.63	4.58
28	4.51	4.46	4.41
29	4.34	4.29	4.24
30	4.18	4.13	4.08
31	4.03	3.98	3.93
32	3.89	3.84	3.79
33	3.75	3.70	3.65
34	3.61	3.56	3.52
35	3.48	3.44	3.39
36	3.36	3.31	3.27
37	3.24	3.20	3.15
38	3.13	3.08	3.04
39	3.02	2.97	2.93
40	2.91	2.87	2.83
42	2.72	2.67	2.63
43	2.63	2.58	2.54
44	2.54	2.49	2.45
45	2.45	2.41	2.37
46	2.37	2.33	2.29
47	2.29	2.25	2.21
48	2.21	2.17	2.13
49	2.14	2.10	2.06
50	2.07	2.03	1.99
51	2.00	1.97	1.93
52	1.94	1.90	1.86
53	1.88	1.84	1.80
54	1.82	1.78	1.74
55	1.76	1.72	1.69
56	1.70	1.67	1.63
57	1.65	1.61	1.58

Temperature	R_{max}	R_{nor}	R_{min}
℃	(kΩ)	(kΩ)	(kΩ)
58	1.60	1.56	1.53
59	1.55	1.51	1.48
60	1.50	1.46	1.43
61	1.45	1.42	1.39
62	1.41	1.37	1.34
63	1.36	1.33	1.30
64	1.32	1.29	1.26
65	1.28	1.25	1.22
66	1.24	1.21	1.18
67	1.21	1.18	1.15
68	1.17	1.14	1.11
69	1.13	1.11	1.08
70	1.10	1.07	1.05
71	1.07	1.04	1.02
72	1.04	1.01	0.98
73	1.01	0.98	0.96
74	0.98	0.95	0.93
75	0.95	0.92	0.90
76	0.92	0.90	0.87
77	0.90	0.87	0.85
78	0.87	0.85	0.82
79	0.85	0.82	0.80
80	0.82	0.80	0.78
81	0.80	0.78	0.75
82	0.78	0.75	0.73
83	0.75	0.73	0.71
84	0.73	0.71	0.69
85	0.71	0.69	0.67
86	0.69	0.67	0.65
87	0.68	0.66	0.64
88	0.66	0.64	0.62
89	0.64	0.62	0.60
90	0.62	0.60	0.58
91	0.61	0.59	0.57
92	0.59	0.57	0.55
93	0.57	0.56	0.54
94	0.56	0.54	0.52
95	0.54	0.53	0.51
96	0.53	0.51	0.50
97	0.52	0.50	0.48
98	0.50	0.49	0.47
99	0.49	0.47	0.46
100	0.48	0.46	0.45

Compressor exhaust temperature sensor (T5) resistance characteristics.

Temperature (°C)	Resistance (kΩ)	Temperature (°C)	Resistance (kΩ)	Temperature (°C)	Resistance (kΩ)	Temperature (°C)	Resistance (kΩ)
-20	542.7	20	68.66	60	13.59	100	3.702
-19	511.9	21	65.62	61	13.11	101	3.595
-18	483	22	62.73	62	12.65	102	3.492
-17	455.9	23	59.98	63	12.21	103	3.392
-16	430.5	24	57.37	64	11.79	104	3.296
-15	406.7	25	54.89	65	11.38	105	3.203
-14	384.3	26	52.53	66	10.99	106	3.113
-13	363.3	27	50.28	67	10.61	107	3.025
-12	343.6	28	48.14	68	10.25	108	2.941
-11	325.1	29	46.11	69	9.902	109	2.86
-10	307.7	30	44.17	70	9.569	110	2.781
-9	291.3	31	42.33	71	9.248	111	2.704
-8	275.9	32	40.57	72	8.94	112	2.63
-7	261.4	33	38.89	73	8.643	113	2.559
-6	247.8	34	37.3	74	8.358	114	2.489
-5	234.9	35	35.78	75	8.084	115	2.422
-4	222.8	36	34.32	76	7.82	116	2.357
-3	211.4	37	32.94	77	7.566	117	2.294
-2	200.7	38	31.62	78	7.321	118	2.233
-1	190.5	39	30.36	79	7.086	119	2.174
0	180.9	40	29.15	80	6.859	120	2.117
1	171.9	41	28	81	6.641	121	2.061
2	163.3	42	26.9	82	6.43	122	2.007
3	155.2	43	25.86	83	6.228	123	1.955
4	147.6	44	24.85	84	6.033	124	1.905
5	140.4	45	23.89	85	5.844	125	1.856
6	133.5	46	22.89	86	5.663	126	1.808
7	127.1	47	22.1	87	5.488	127	1.762
8	121	48	21.26	88	5.32	128	1.717
9	115.2	49	20.46	89	5.157	129	1.674
10	109.8	50	19.69	90	5	130	1.632
11	104.6	51	18.96	91	4.849		
12	99.69	52	18.26	92	4.703		
13	95.05	53	17.58	93	4.562		
14	90.66	54	16.94	94	4.426		
15	86.49	55	16.32	95	4.294		
16	82.54	56	15.73	96	4.167		
17	78.79	57	15.16	97	4.045		
18	75.24	58	14.62	98	3.927		
19	71.86	59	14.09	99	3.812		