USER MANUAL

TURBRO

INVERTER
RV AIR CONDITIONER

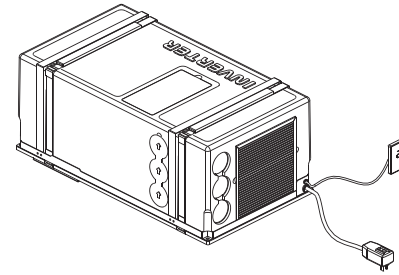

Model: LL10V

Please read the manual carefully before use and keep it for future reference.

CONTENTS

SAFETY PRECAUTIONS ---------- 01
REFRIGERANT INFORMATION ---------- 04
PARTS DESCRIPTION ---------- 05
INSTALLATION ---------- 08
OPERATION ---------- 15
MAINTENANCE ---------- 22
TROUBLESHOOTING ---------- 24
WARRANTY & CUSTOMER SUPPORT ---------- 27

SAFETY PRECAUTIONS

General Safety

- **DO NOT use this appliance until you have read the safety warnings and operating instructions.** Risk of fire, malfunction, property damage, electric shock, serious injury, or even death may result if warnings and instructions are not adhered to.
- The manufacturer declines all responsibility for personal injury or damage to animals or objects caused by inappropriate use of the appliance according to the warnings for installation, use, and maintenance described in this instruction manual.
- This appliance is not to be used or have maintenance performed by persons with reduced physical, sensory, or mental capabilities, or lack of experience and knowledge unless they have been given strict supervision or instruction concerning the use of the appliance by a person responsible for their safety.
- All installation, repair, maintenance, and relocation of this unit must be performed by a licensed HVAC professional.
- Keep the appliance out of reach of children and pets.
- This product is not intended for commercial use.
- DO NOT use it for any purpose other than that for which it was designed.
- DO NOT insert or allow foreign objects to enter any ventilation or exhaust opening as this may cause an electric shock or fire, or damage the unit.
- DO NOT alter or modify this appliance in any manner.
- DO NOT directly expose your body to cool air for a prolonged period.
- DO NOT climb over or place objects on top of the outdoor unit.
- Make sure that condensate water can drain out of the unit, unhindered in any way.
- NEVER attempt to operate this appliance if it is damaged, malfunctioning, disassembled, or has missing or broken parts.
- Immediately turn off the unit and shut off the circuit breaker if any abnormal situation arises.
- If the product is damaged or is not functioning properly, stop using it and contact Customer Support immediately.

Electrical Safety

- Installation must be carried out by a **certified electrician** in line with all applicable local, state, and national codes.
- Check the power cable carefully before use to ensure that they are not damaged.
- The power cable should not be scratched, damaged, knotted, pressed against heavy objects, clamped, or processed. Otherwise, it may increase the risk of electric shock, short circuit, or fire.
- Make sure the operating voltage is the same as the parametric label.
- Check the available power supply and resolve any wiring problems before installing and operating this unit.
- The air conditioner is designed to operate from a 115 V AC, 60 Hz, 1-phase power supply.
- The air conditioner includes a grounding feature to prevent electric shock hazards. Please ensure that the unit has been connected to a 115 V/60 Hz circuit with reliable grounding.
- Protect the indoor unit with a fuse of suitable capacity for the maximum input current or with another overload protection device.
- This unit set should be plugged directly into a power outlet. Power outlets should be properly rated, protected, and sized to avoid electrical overload.
- This unit set must be used in a properly grounded wall receptacle. If the wall receptacle you intend to use is not adequately grounded or not protected by a time-delay fuse or circuit breaker, have a qualified electrician install the proper wall power receptacle before using this appliance.
- DO NOT use an extension cord or power strip with this product, as using those may increase the risk of fire.
- DO NOT connect other appliances to the same breaker with this air conditioner. Poor electrical connections, poor insulation, and high amperage draw can lead to fire.
- DO NOT handle the power cable with wet hands. Keep the cable away from liquids.
- DO NOT pull the power and signal cables. System power input must be provided through a hardwired power circuit with a proper gauge.
- Turn off the breaker during lightning or other strong storms.
- Turn off the air conditioner and breaker if the AC unit will not be in use for an extended period.

- If the power cable is damaged, it must be replaced by the manufacturer, its certified service agent, or similarly qualified persons to avoid a hazard.
- Make sure the power supply is cut off you until finish installing the air conditioner. Otherwise, it may cause an electric shock.

FCC Caution

This device complies with part 15 of the FCC Rules. Operation is subject to the following two conditions:

(1) This device may not cause harmful interference, and (2) this device must accept any interference received, including interference that may cause undesired operation.

Any Changes or modifications not expressly approved by the party responsible for compliance could void the user's authority to operate the equipment.

Note: This equipment has been tested and found to comply with the limits for a Class B digital device, pursuant to part 15 of the FCC Rules. These limits are designed to provide reasonable protection against harmful interference in a residential installation. This equipment generates uses and can radiate radio frequency energy and, if not installed and used in accordance with the instructions, may cause harmful interference to radio communications. However, there is no guarantee that interference will not occur in a particular installation. If this equipment does cause harmful interference to radio or television reception, which can be determined by turning the equipment off and on, the user is encouraged to try to correct the interference by one or more of the following measures:

- Reorient or relocate the receiving antenna.
- Increase the separation between the equipment and receiver.
- Connect the equipment into an outlet on a circuit different from that to which the receiver is connected.
- Consult the dealer or an experienced radio/TV technician for help.

The distance between user and device should be no less than 20cm.

REFRIGERANT INFORMATION

- This air conditioner utilizes fluoride R-32 refrigerant, which is a next-generation refrigerant that efficiently transfers heat and has a lower environmental impact than other refrigerants.
- Compared to other common refrigerants, R-32 is an environmentally friendly refrigerant that does not harm the ozone layer and has a lower greenhouse effect. Its excellent thermodynamic properties contribute to high energy efficiency, requiring less refrigerant and reduced maintenance.
- The refrigerant is flammable and odorless. Under certain conditions, it can cause explosions. However, its flammability is very low and it can only be ignited by fire.
- The appliance should be stored in a room without active ignition sources such as open flames, an operating gas appliance, or an operating electric heaters.
- Ducts connected to this appliance should not contain ignition sources.
- Keep any required ventilation openings clear of obstructions.
- Do not pierce or burn the appliance or any of its components.
- Be aware that refrigerants may be odorless, even when leaking.
- Only use manufacturer-recommended methods for defrosting or cleaning.
- Servicing shall be performed only as recommended by the manufacturer.



This appliance is filled with flammable R-32.



Before installing the appliance, read the installation manual first.



Before using the appliance, read this manual first.



Before repairing the appliance, read the service manual first.

PARTS DESCRIPTION

Parts List

PARTS	PARTS NAME	QUANTITY
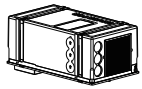	RVAC Unit	1
	Wall Pad Controller (M4*15mm Screws Included)	1
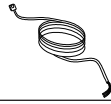	Wall Pad Wiring Harness	1
	Return Air Metal Grille	1
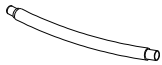	Drain Pipe	2
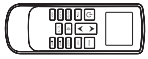	Remote Control	1
	Remote Control Holder (M4*7.5mm Flat Head Screws Included)	1
	AAA Battery	2
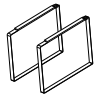	Fixing Belt	2

PARTS	PARTS NAME	QUANTITY
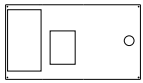	Paper Template For Wall Drilling	1
	Buckle	4
	Spacer (Used for System 3)	4
	M4 X 7.5mm Round Head Screw For Return Air Metal Grille	8
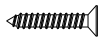	M4 X 35mm Flat Head Screw For Base or Buckle (Used for System 1/system 2/system 3)	8
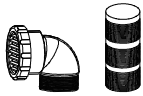	Air Duct Kit	Not Included

Product View

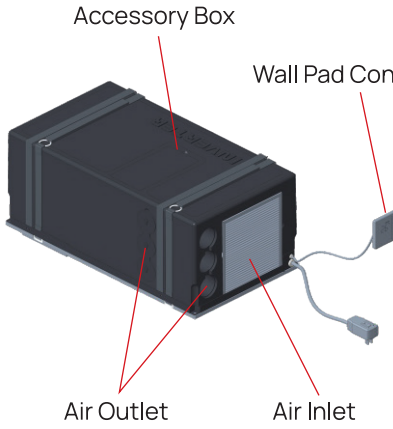

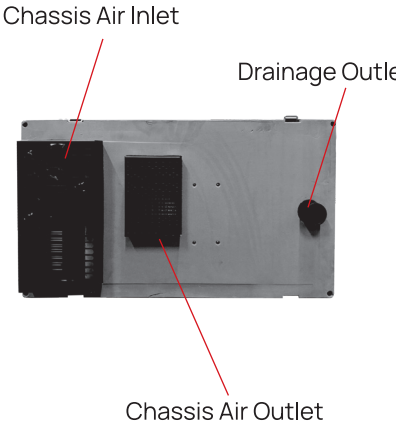

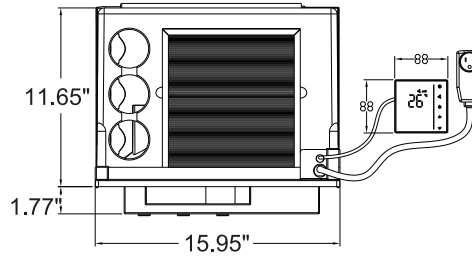

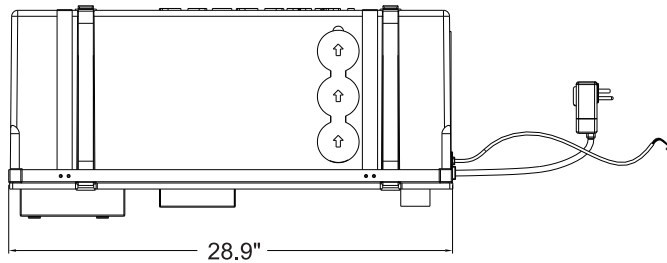

INSTALLATION

⚠ WARNING

- The air conditioner has been designed for use in recreational vehicles.
- Installation must performed by persons with specific technical knowledge. In addition to this requirement, installers must have adequate working conditions in order to ensure their own safety and that of others.
- Be careful when testing the unit. Do not operate the unit with the exterior case removed.
- During the use of this product, significant changes in air temperature within the vehicle may occur. When the temperature drops rapidly, some condensation may adhere to the surfaces of objects near the air outlet, which is a normal phenomenon.
- After the air conditioner has operated normally for a certain period, it will automatically dry and detach from the surfaces of these objects. Therefore, when the air conditioner is in operation, please keep the doors and windows closed as much as possible to reduce the accumulation of water vapor on the surfaces of objects inside the vehicle.
- Always use a circuit breaker for protection.
- The recommended operating temperature range is 63°F-109°F for cooling (17°C-43°C).
- The recommended operating temperature range is 28°F-81°F for heating(-2°C-27°C).
- The air inlet should be far away from obstacles and not have any objects near the air outlet.
- The appliance shall not be installed in laundry areas.

1. Unpacking and Handling

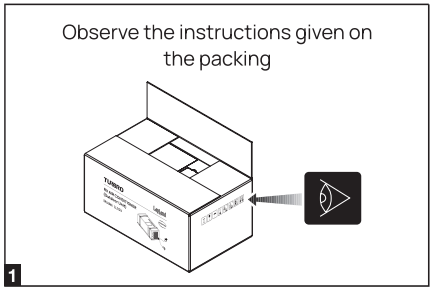

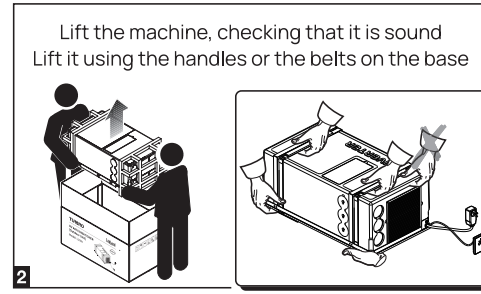

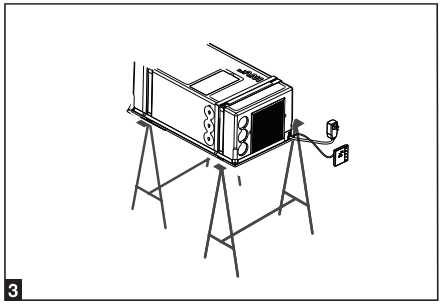
3

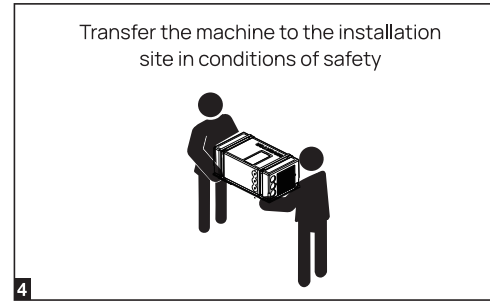

4

2. Select an Installation Site

- The machine must be installed on the floor.
- Position the machine so as to ensure easy access for servicing and to facilitate disassembly and installation.
- Place the assembly template in the compartment intended for installation and check the space available for the openings in the floor.
- To minimize the transmission of noise and vibration during operation, the machine must have a minimum clearance on each side of 1.18 inch from the walls and fittings.
- To make renewing the filter easier, keep a distance of 7.87 inch between the front of the machine and the walls of the compartment.
- If fitting in external compartments (e.g., false bottoms), the air to be treated must be drawn in from the vehicle's passenger compartment.
- Drawing in outside air can significantly reduce the power of the system.
- To install the machine it is necessary to create opening in the floor. The openings in the floor of the vehicle must be accessible and, therefore, must not be covered by parts of the chassis frame behind or the like.
- These openings must not be reached by splashes from the wheels; fit a splash guard or something similar if necessary.
- Take care to leave a gap of at least 1.18 inch between the machine and the adjacent walls. Secure the machine to the floor using the kit provided.
- The machine must preferably be installed level. Maximum angle 10° to prevent condensation coming out.
- Seal the machined surfaces of the openings in the floor with water-repellent products.

- Before installation, make sure the machine is within the reach of the power cable from the power socket.

3. Preparing the Opening and Fixing

WARNING: Before making the holes, always check there are no cables, gas pipes, parts of the chassis frame or the like underneath or hidden.

- Confirming the installation position, affix the paper template for wall drilling in the appropriate position and cut openings for the inlet/outlet/drain hole.

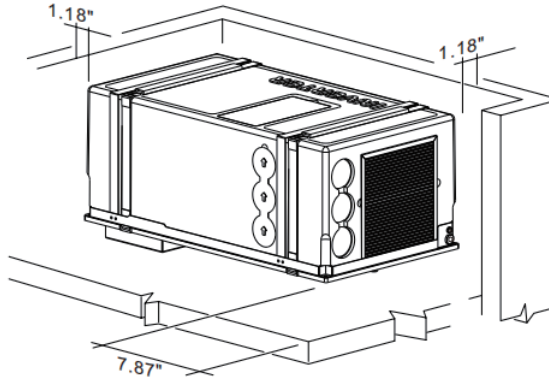

▲ The distance between the machine and its surroundings

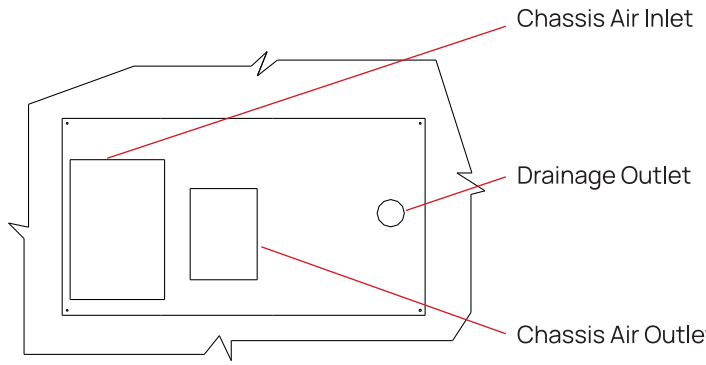

▲ Paper template flat on the floor and open hole location

- Install the machine in the position where the hole is opened, there are three methods to attach it.

System 1: Use M4×35mm flat head screws to directly attach the machine to the base plate through the holes at the four corners of the machine.

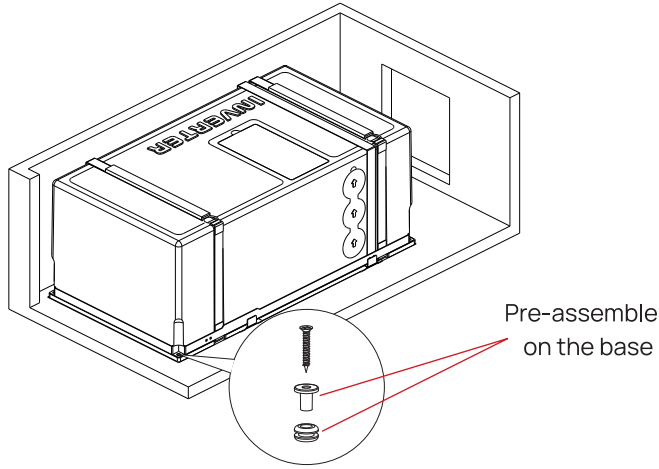

System 2: Fasten the fixing belt to the base plate with M4x35mm flat head screws and buckles according to the paper template, and then strap the machine in the fixing belt.

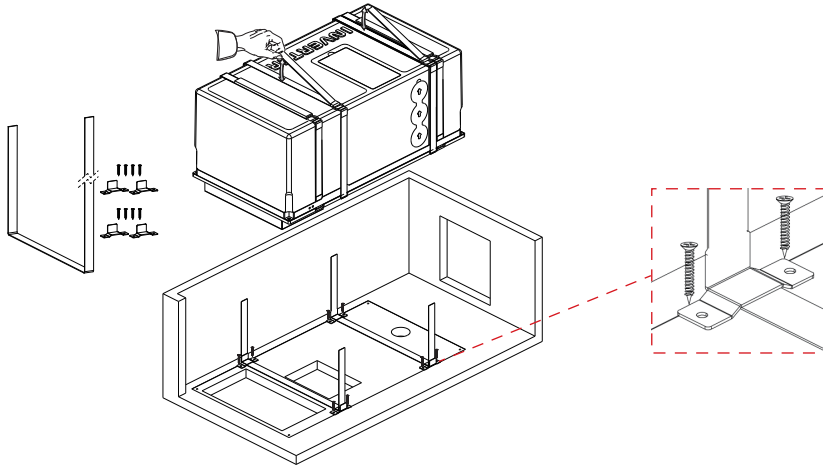

System 3: Fasten the fixing belt to the base plate with M4x35mm flat head screws and spacers according to the paper template, and then strap the machine in the fixing belt. Note that the screw must pass through the spacer before securing the fixing belt.

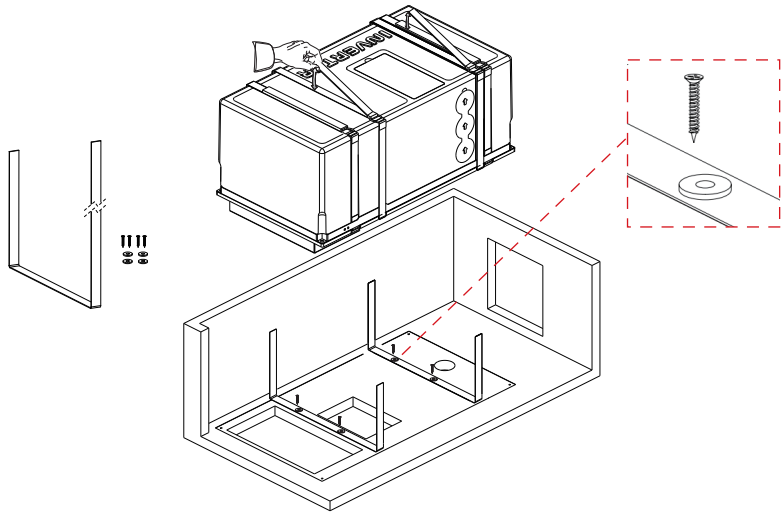

4. Fitting the wall pad controller

- Fix the steel plate on the wall with self-tapping screws. The distance between two holes is 2.36 inch, and the hole diameter should be less than 1.97 inch, the screw is m4*15mm pan head cross pointed tail tapping screw.
- When wiring, press the button on the socket. Insert the wire into the socket according to the mark, and then release the button to complete the wiring fix.

Press the button and insert the wire into the hole according to the mark

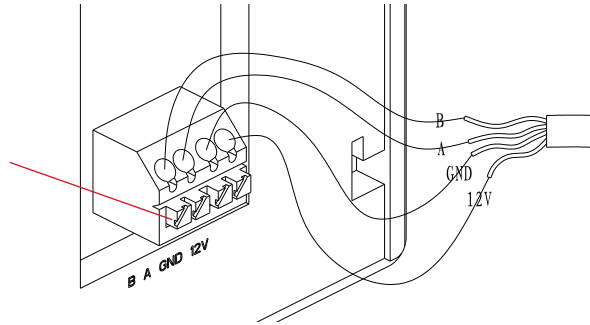

- After the correct wiring, place the thermostat against the steel plate, and then slide down the buckle to fix it.

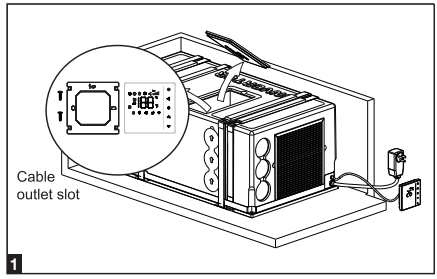

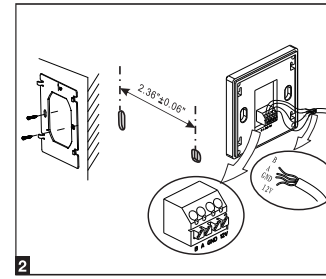

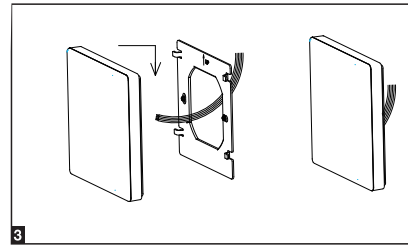

5. Compartment Opening and Electrical Hook-Up

- Make a hole in the compartment where the machine has been installed to permit recirculation of the internal air. Close this hole with the return air metal grille supplied (M4 x 7.5mm round head screws), and allow at least 46.5in² of air to pass through. Install the condensation drain pipes provided, connect the receiver extension to the machine and lastly power up by inserting its plug into a socket outlet 115V - 60Hz.
- Before switching on, make sure that the power pedestal and the extension used are able to withstand the power input required by the machine. It is recommended to use a power cord at least 16AWG.

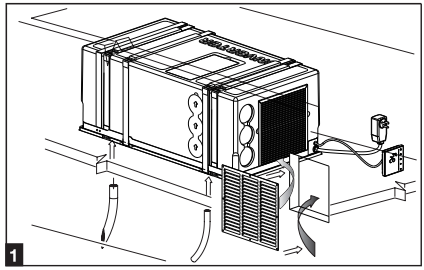

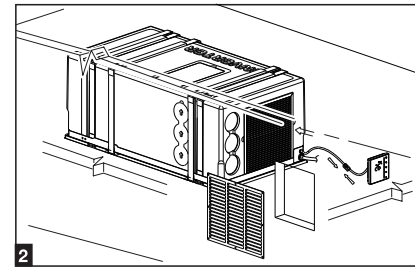

6. Install the Air Ducting (Not included)

- It is recommended to use a cardboard pipe for air conditioning with an aluminum core and external covering of PVC with an inside nominal diameter of 2.36 inches and an outside diameter of 2.52 inches.
- The ventilation pipes are joined by pressing them together using the tapered hole on the air outlet.
- The pipes can be connected either on the outlet on the coil side or, by removing the guard and closing the front holes, on the side outlet.
- To achieve the best efficiency it is recommended to:

  - lay the air pipes so they are as short and straight as possible;

  - not use pipes any longer than 16ft and 4.8in;

  - not place the pipes near sources of heat.
- The recirculation air is drawn in through a grille or through other openings with a total cross-section of at least 46.5in².
- The recirculation air opening must be made near the machine, if this is not the case then make sure that the air flow cannot be obstructed by anyting (if necessary, create an air duct between the opening and the machine).
- The recirculation air must be taken from inside the passenger compartment; if it were taken from the outside then machine efficiency would suffer.
- Select the side air outlet direction according to the actual situation. Once a side air outlet is chosen, make sure to close the air outlet on the other side. (use a tool to lift the air outlet plug EPP when adjusting the direction of the air outlet).

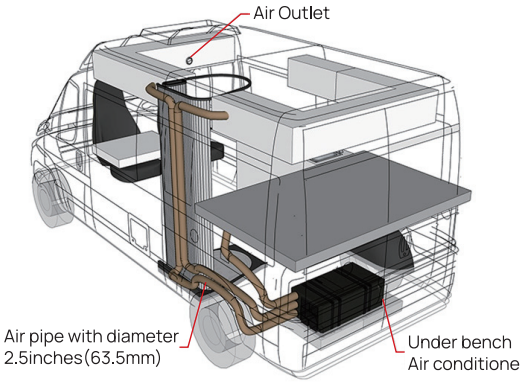

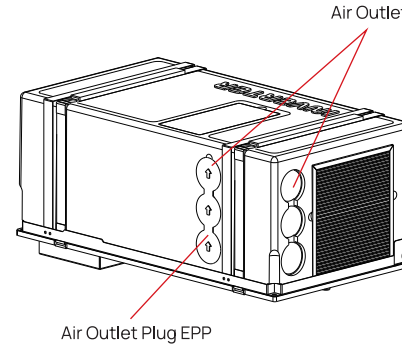

OPERATION

Display of the Wall Pad Controller

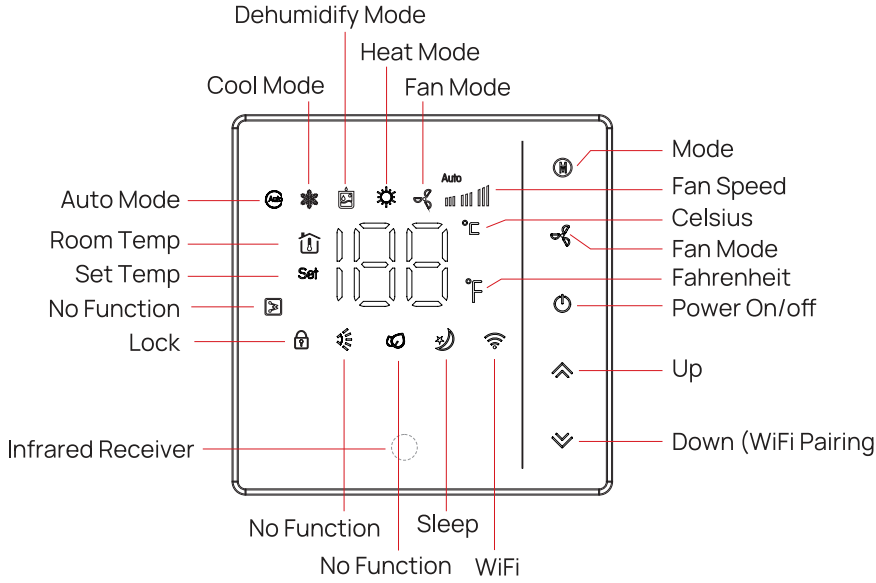

KEY	DESCRIPTION
	Power On/Off: Press briefly to turn the unit ON/OFF.
	Mode: Press briefly to switch the Auto/Cool/Dehumidify/Fan/Heat mode.
	Fan: Press briefly to switch the fan speed to Auto/High/Medium/Low level.
	Up/Down: Press short to increase/decrease the values of the set temperature or other options.
	WIFI Connection: In the off state, press and hold the down key for 10 seconds until the WiFi icon flashes to enter the WiFi connection.
	Lock: Press and hold the up and down keys for 3 seconds at the same time to activate the child lock state. In this mode, all keys are invalid.

Note: The ambient temperature sensor is factory-installed in the wall pad controller. Please install the wall pad controller in a location that best reflects the true ambient temperature inside the RV.

Remote Control

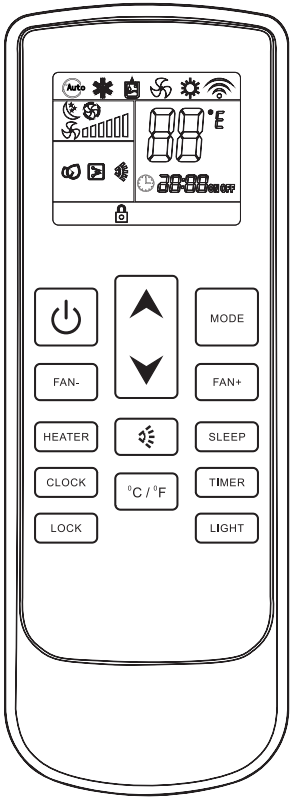

Auto	Auto Mode
	Cool Mode
	Dry Mode
	Fan Mode
	Heat Mode
	Send Signal
	Sleep Mode
	Fan Speed Setting
	Temperature Setting
	Remote Clock
	Timer Setting
ON OFF	Timer On/off
	Child Lock
	Light (No Function)
	Electric Heat (No Function)
	Swing (No Function)

ATTENTION: The infrared remote control is only effective when the commands are transmitted towards the wall pad controller (do not transmit commands towards the machine).

Button

Press this button to turn on the unit. Press this button again to turn off the unit.

HEATER Button (Optional , No Function)

Button (Optional , No Function)

MODE Button

Press this button to cycle through the AUTO, COOL, DRY, FAN, and HEAT modes.

- **Auto Mode:** The air conditioner operates automatically according to ambient temperature. The operating temperature cannot be adjusted and will not be displayed. Pressing the "FAN" button can adjust the fan speed.

Ambient Temperature	Corresponding Operating Mode
≥ 79°F (26°C)	Cool
75°F ≤ T < 79°F (24°C ≤ T < 26°C)	Dry
68°F ≤ T < 75°F (20°C ≤ T < 24°C)	Fan
< 68°F (20°C)	Heat

- **Cool Mode:** The air conditioner operates under standard cooling mode. The set temperature and fan speed can be adjusted. Once the set temperature is reached, the compressor will continue to run at minimum capacity for 1 hour before shutting off.
- **Dry Mode:** The air conditioner runs at low fan speed for dehumidification. The fan speed cannot be adjusted.
- **Fan Mode:** The air conditioner does not produce cool or warm air, only blows air at room temperature. The fan speed can be adjusted.
- **Heat Mode:** The air conditioner operates under heat mode. The set temperature and fan speed can be adjusted. Once the set temperature is reached, the compressor will continue to run at minimum capacity for 1 hour before shutting off.

  Note: After starting up the heating mode, the AC may begin blowing obviously hot air after 1 minute.

FAN- FAN+ Button

Press the Fan -/+ button to select low, medium, high speed or auto speed.

Note: The fan speed cannot be adjusted in DRY mode.

- Indicates auto speed. Under this mode, the air conditioner will select the proper fan speed automatically.

Button

- Pressing this button will increase/decrease the set temperature by 1°F. The set temperature range is 64°F - 86°F (18°C - 30°C). The actual ambient temperature is displayed 10 seconds after no operation.
- After pressing the timer/clock function, pressing the button will adjust the timer.

SLEEP Button

Automatically adjusts the setting temperature according to the circadian rule.

- Sleep mode is only available in cooling or heating modes.
- Under cool or heat mode, press this button to enter the sleep operation mode. The icon will display on the remote control and wall pad. Then the wall pad will display "SP" after 10 seconds. Press the button again to exit sleep mode.
- When the sleep mode is selected on the remote control, the fan speed will automatically switch to low and cannot be adjusted.
- Under cool mode, after 1 hour of operation in sleep mode, the temperature will automatically increase by 2°F from the original setting. After 2 hours, it will increase by another 2°F, then remain unchanged.
- Under heat mode, after 1 hour of operation in this mode, the temperature will automatically decrease by 2°F from the original setting. After 2 hours, it will decrease by 2°F, then remain unchanged.

Note: Switching modes will automatically exit sleep mode.

°C / °F Button

Press the button to switch between Fahrenheit and Celsius displays.

TIMER Button

When the unit is on, press the button to set the time to turn off the unit (0-24h). The icon 88:88 OFF will display and the icon OFF will flash. Each press of the button ▲ will increase the time by 1 hour, and each press of the button ▼ will increase the time by 10 minutes. Holding the button for 2 seconds will change the timer rapidly. Press the TIMER button to confirm the timer and the icon OFF stays on. Press the TIMER button again to cancel this function.

When the unit is off, press the button to set the time to turn on the unit (0-24h). The icon 88:88 ON will display and the icon ON will flash. Each press of the button ▲ will increase the time by 1 hour, and each press of the button ▼ will increase the time by 10 minutes. Holding the button for 2 seconds will change the timer rapidly. Press the timer button to confirm the timer and the icon ON stays on. Press the timer button again to cancel this function.

Note: When the TIMER is set, the CLOCK function will not be displayed. Then the wall pad will display " tE " after 10 seconds.

CLOCK Button

Press the button to set the time on the remote control. The icon 88:88 will display and the icon 88:88 will flash. Each press of the button ▲ will increase the time by 1 hour, and each press of the button ▼ will increase the time by 1 minute. Holding the button for 2 seconds will change the timer rapidly. Release the button once your desired time setting has been reached. Confirm the operation after 5 seconds.

LOCK Button

Press the button to activate the child lock function. In this mode, the remote control will display the 🔒 icon and will not send any signal to the air conditioner.

Note: This button only controls the remote control, not the wall pad.

Defrost Mode

- When operating in heating mode in low-temperature environments, frost may form on the outdoor unit coils. The system will automatically enter defrost mode based on temperature detection, during which the wall pad controller will display the " dF " indicator. In defrost mode, the fan stops operating while the compressor runs normally. After defrost mode is completed, the system will automatically resume normal operation.

Operate With AIR.ai App

With the APP, you can control the unit from anywhere, even outside of your home, with your iPhone or Android smartphone.

- The supported wireless routers must work with a 2.4G Hz operating frequency. 5.0 GHz frequency is not currently supported.
- Standard: IEEE 802.11b/g/n20/n40
- Supported smartphone systems: Android 6.0 and later , IOS 12.0 and later.

a. Scan this QR code and download it.

b. Launch the app and log in to your account (or sign up for your first use).

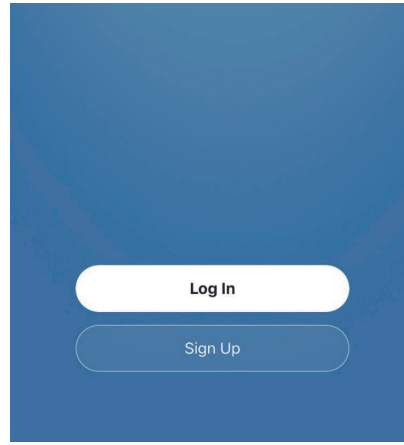

Press and hold the button on the wall pad for 10 seconds in the off state to activate the WiFi function. The WiFi indicator on the wall pad display is on, indicating that it is ready to connect to the App.

c. Turn on Bluetooth on your mobile phone and add the device to auto-scan all nearby smart devices.

d. Choose your Wi-Fi network and enter the password. AIR.ai will start connecting to your device.

e. When the the page indicates a successful connection and the WiFi signal on the decorative panel keeps on, it means the the connection is complete.

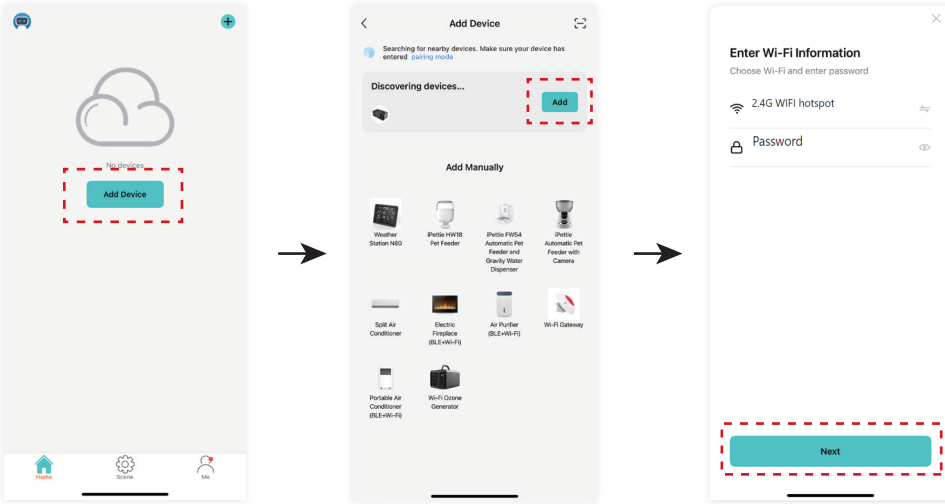

Note: If you have difficulty connecting to the app, you can press and hold the wall pad button for 10 seconds in the off state to reset the Wi-Fi signal.

MAINTENANCE

Replacing the Batteries

1. Open the battery cover:
Hold the handle of the battery cover, gently pull down, and remove the cover.

2. Insert the battery (AAA):
Ensure the battery polarity matches the markings inside the battery compartment.

3. Reinstall the battery cover.

4. Check:
If the display screen of the remote control does not show anything after pressing the ⏻ button, please reinstall the battery.

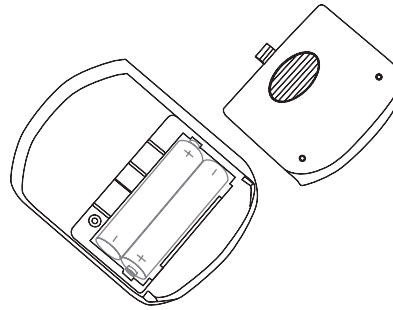

Cleaning the Machine and Filter

Cleaning: Periodically remove the dust with a moist cloth. If necessary, use a non-aggressive detergent. Never use petrol or solvents.

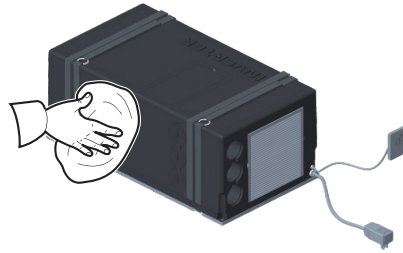



Checking: Periodically make sure that:

- the condensation drain holes are not obstructed.
- the openings in the floor are not obstructed.

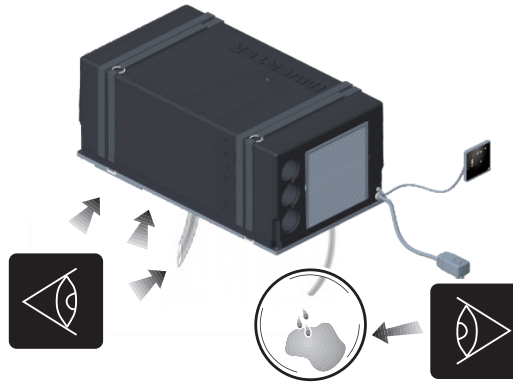

Filters cleaning: Periodically carry out this operation; wash the Filter with a detergent solution and allow to dry before refitting. When removing the filter, pull it outward and then pull it upward.

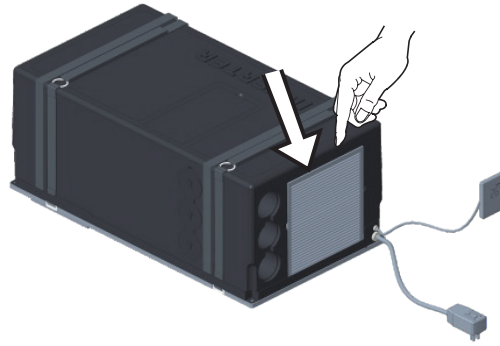

TROUBLESHOOTING

Operations the user can perform

Operations authorized personnel can perform

SOLUTION \ CAUSE	The machine does not cool	The machine does not heat	Air no longer circulates inside the vehicle	Water seeps into the vehicle	The machine will not start	The machine stops working
The temperature is lower than 64°F	○					
The temperature is higher than 86°F		○				
Check the set point temperature	○	○				
Defective thermal protection	●	●			●	●
The mode button is not in the right position	○	○				
Damaged electric heating element		●				
Low gas charge	●	●				
Damaged compressor	●	●			●	
Dirty heat exchange coils	●	●	●			●
Defective internal fan			●			
Obstructed air filter			○			○
Defective external fans	●					●
Clogged condensation drain holes				○		
Damaged 4-way valve		●				
No power arrives					○	
Voltage too low (less than 103V)					●	●
Defective electric condenser					●	●

FAULT CODE	FAULT CONTENT
A1	Indoor side EE malfunction
A2	Evaporator fan motor malfunction
A4	Evaporator sensor malfunction
A5	Indoor ambient temperature sensor malfunction
Er	Communication failure between main board and thermostat
E1	Heating evaporator overheat protection shutdown
E2	Protection shutdown against low outdoor ambient temperature at cooling mode
E3	Protection shutdown against high outdoor ambient temperature at heating mode
E5	Four-way valve reversing failure
E6	Refrigerant shortage fault
A8	Outdoor EE malfunction
B4	The compressor starts abnormally, lacks phase, or is reversed
B5	Compressor out-of-step failure
B6	IMP module failure
B8	Discharge air temperature sensor malfunction
C2	Condensor temperature sensor malfunction
C3	Outdoor ambient temperature sensor malfunctionn
C4	Outdoor DC fan motor failure
C5	Drive bus overvoltage protection
C6	Drive bus for undervoltage proection
C7	Drive phase current overcurrent fault
C8	Abnormal phase current sampling
FL	Full water protection shutdown
D1	The outdoor unit is shut down for AC current protection
D2	Compressor phase current protection shut down
D3	Outdoor side AC voltage high/lowr protection
D4	DC bus voltage high/low protection
D5	IMP high temperature protection shutdown
D6	Discharge air temperature too high causes shutdown protection

FAULT CODE	FAULT CONTENT
D7	Cooling evaporator anti-freezing protection shutdown
D8	The refrigeration outer coil superheat causes shutdown protection; condenser or overhead protection shutdown in cooling mode

If you notice or experience any of the following conditions, please turn off the air conditioner, disconnect from power, discontinue use, and contact support immediately.

- Strange noises during operation.
- Faulty electronic control board.
- Faulty fuses or switches.
- Spraying water or objects inside the appliance.
- Very strong smells coming from the appliance.

Wiring Diagram

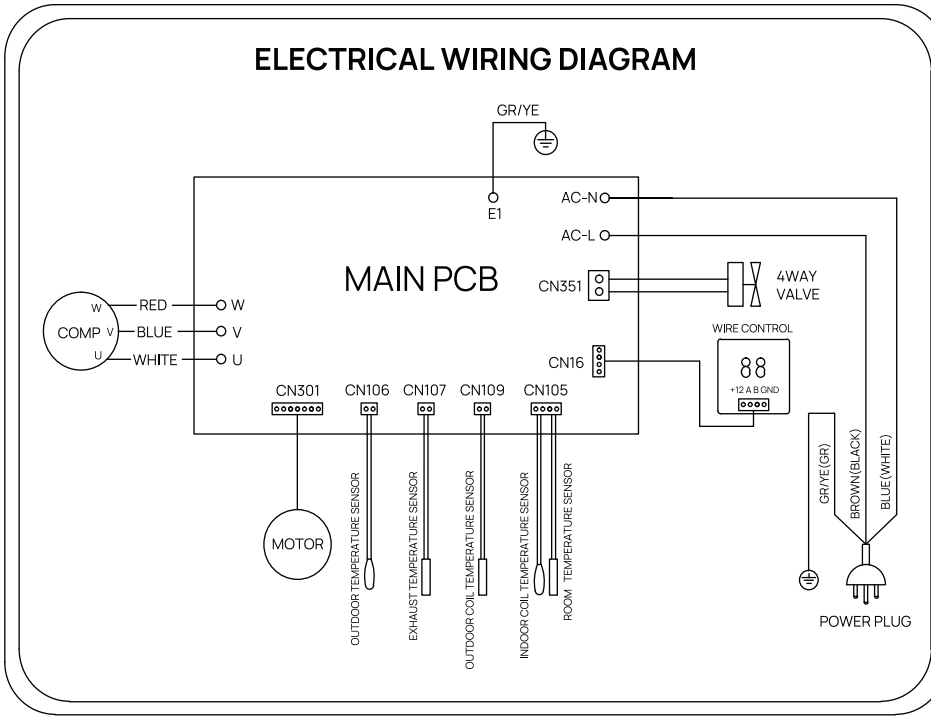

WARRANTY & CUSTOMER SUPPORT

This 1-year limited warranty is extended to the original purchaser of this product and warrants against any defect in materials and workmanship under normal use and conditions, for a period of one year from the date of the original purchase, subject to the conditions and limitations outlined below.

This warranty is non-transferable to any subsequent owner of the product regardless of whether the product is transferred during the specified term of the warranty.

THIS LIMITED WARRANTY IS GIVEN TO THE PURCHASER IN LIEU OF ALL OTHER WARRANTIES, EXPRESSED OR IMPLIED, INCLUDING BUT NOT LIMITED TO THE WARRANTIES OF MERCHANTABILITY OF FITNESS FOR A PARTICULAR PURPOSE.

What is Covered?

- TURBRO's warranty extends only to products purchased from authorized sellers that are subject to TURBRO's quality controls and have agreed to follow its quality controls.
- This warranty is limited to the repair or replacement of part(s) proved to be defective in material or workmanship after said defect is confirmed by the manufacturer's inspection.
- The manufacturer may, at its discretion, fully discharge all obligations with respect to this warranty by refunding the wholesale price of the defective part(s).

UPON THE EXPIRATION OF THIS WARRANTY, ALL SUCH LIABILITY WILL TERMINATE. NO OTHER WARRANTIES ARE EXPRESSED OR IMPLIED ANYMORE.

Some states do not allow limitations on how long an implied warranty lasts, so the above limitations may not apply to you.

What is Not Covered?

- Damage or losses caused by any alterations or unauthorized repair made to the product by the owner.
- Damage or losses caused by accident, neglectful operation, misuse, abuse, or use contrary to the user manual and safety guidelines.

- Damage or losses caused by any alterations or unauthorized repair made to the product by the owner.
- Damage or losses caused by accident, neglectful operation, misuse, abuse, or use contrary to the user manual and safety guidelines.
- Damage or losses occurring during commercial use, rental use, or any use for which the product is not intended.
- Damage or losses caused by improper or inadequate maintenance.
- Failure to perform general maintenance (including cleaning).
- Use of non-standard parts or accessories.
- Natural depreciation and normal wear and tear.

TURBRO SHALL NOT BE LIABLE FOR ANY INCIDENTAL OR CONSEQUENTIAL DAMAGES FOR BREACH OF ANY EXPRESS OR IMPLIED WARRANTY ON THIS PRODUCT, EXCEPT TO THE EXTENT PROHIBITED BY APPLICABLE LAW.

Some states do not allow the exclusion or limitation of incidental or consequential damages so the above limitation or exclusion may not apply to you.

How to Request Warranty Services?

To obtain the benefit of this warranty please leave a message online (www.turbro.com/contact), or send an email to support@turbro.com.

To express our gratitude to you for choosing us, we are giving you a 1-year warranty extension to the original **1-year** manufacturer's limited warranty, extending the coverage period to two years in total.

- Complete the registration of your new product at https://www.turbro.com/warranty within 90 days from the date of package delivery (inclusive of the 90th day).
- Any registration beyond this stipulated period will be deemed invalid.
- The ultimate interpretation of the terms and conditions related to the extended warranty service rests solely with TURBRO.

If you discover that your product is defective within the specified warranty period, please contact our Customer Support via support@turbro.com.

- Order ID and invoice, or bill of sale should be provided. Such payment records must be kept to verify the purchase date and establish a warranty period.
- Model and issue description should be provided in detail, preferably with pictures and videos.
- DO NOT dispose of your product before contacting us.
- DO NOT return the product unless instructed by our customer service.
- The original carton should be kept in case of warranty return of the unit.

What will TURBRO Do?

- Replace certain parts.
- Replace the item.
- Refund the item under certain circumstances.

In no event shall liability exceed the purchase price paid by the original purchaser of the product.

Any instructions or warranty included in this manual may be subject to change without notice. For the most up-to-date instructions and warranty information, please contact us via support@turbro.com.

TURBRO

© Katmai Technology Limited

support@turbro.com

www.turbro.com

(323) 438-3334

V20251230