Atmos Upright Bike and Atmos Home Edition Upright Bike

Owner's Manual / Assembly Instructions

1028291-0001 REV AC

LifeFitness

Corporate Headquarters

Columbia Centre III, 9525 Bryn Mawr Avenue, Rosemont, IL 60018 • U.S.A.
847.288.3300 • FAX: 847.288.3703
Service phone number: 800.351.3737 (toll-free within U.S.A., Canada)
Global Website: www.lifefitness.com

International Offices

AMERICAS

North America

Life Fitness, LLC

Columbia Centre III
9525 Bryn Mawr Avenue
Rosemont, IL 60018 U.S.A.
Telephone: (847) 288 3300
Service Email:
customersupport@lifefitness.com
Sales/Marketing Email:
commercialsales@lifefitness.com

Brazil

Life Fitness Brasil

Av. Rebouças, 2315
Pinheiros
São Paulo, SP 05401-300
BRAZIL
SAC: 0800 773 8282 option 2
Telephone: +55 (11) 3095 5200 option 2
Service Email: suportebr@lifefitness.com
Sales/Marketing Email:
vendasbr@lifefitness.com

Latin America and Caribbean*

Life Fitness, LLC

Columbia Centre III
9525 Bryn Mawr Avenue
Rosemont, IL 60018 U.S.A.
Telephone: (847) 288 3300
Service Email:
customersupport@lifefitness.com
Sales/Marketing Email:
commercialsales@lifefitness.com

EUROPE, MIDDLE EAST, and AFRICA (EMEA)

Belgium, Netherlands, and Luxemburg

Life Fitness (Atlantic) B.V.

Fascinatio Boulevard 230, 4th Fl - Bldg B
3065WB, Rotterdam
The Netherlands
+31 88 646 6666
Service Email:
service.benelux@lifefitness.com
Sales/Marketing Email:
marketing.benelux@lifefitness.com

United Kingdom

Life Fitness UK LTD

Unit 109ª
Lancaster Way Business Park
Ely, Cambs, CB6 3NX
Telephone: General Office (+44) 1353.666017
Customer Support (+44) 1353.665507
Service Email: uk.support@lifefitness.com
Sales/Marketing Email: life@lifefitness.com

Germany, Austria, and Switzerland

Life Fitness Europe GMBH

Neuhofweg 9
85716 Unterschleißheim
GERMANY
Telephone:
+49 (0) 89 / 31775166 Germany
+43 (0) 1 / 6157198 Austria
+41 (0) 848 / 000901 Switzerland
Service Email:
kundendienst@lifefitness.com
Sales/Marketing Email:
vertrieb@lifefitness.com

Spain

Life Fitness IBERIA

C/Frederic Mompou 5,1°1ª
08960 Sant Just Desvern Barcelona
SPAIN
Telephone: (+34) 93.672.4660
Service Email:
servicio.tecnico@lifefitness.com
Sales/Marketing Email:
info.iberia@lifefitness.com

All Other EMEA Countries and Distributor Business EMEA*

Life Fitness (Atlantic) B.V.

Fascinatio Boulevard 230, 4th Fl - Bldg B
3065WB, Rotterdam
The Netherlands
+31 88 646 6666
Service Email:
emeaservicesupport@lifefitness.com

ASIA PACIFIC (AP)

Japan

Life Fitness Japan, Ltd

4-17-33 Minami Aoyama 1F/B1F
Minato-ku - Tokyo 107-0062
Japan
Telephone: (+81) 0120.114.482
Fax: (+81) 03-5770-5059
Service Email: service.lfj@lifefitness.com
Sales/Marketing Email:
sales@lifefitnessjapan.com

Hong Kong

Life Fitness Asia Pacific LTD

26/F, Global Trade Square
21 Wong Chuk Hang Road
Wong Chuk Hang
Hong Kong
Telephone: (+852) 25756262
Fax: (+852) 25756894
Service Email: service.hk@lifefitness.com
Sales/Marketing Email:
marketing.hk.asia@lifefitness.com

All Other Asia Pacific countries and distributor business Asia Pacific*

Life Fitness Asia Pacific LTD

26/F, Global Trade Square
21 Wong Chuk Hang Road
Wong Chuk Hang
Hong Kong
Telephone: (+852) 25756262
Fax: (+852) 25756894
Service Email: service.ap@lifefitness.com
Sales/Marketing Email:
marketing.hk.asia@lifefitness.com

*Also check www.lifefitness.com for local representation or distributor/dealer

User and Service Documents Link

https://lfn.fit/KnowledgeBase

https://lfn.fit/PartStore

Additional information is available online using the links above.

تتوفر معلومات إضافية على الإنترنت باستخدام الرابط أعلاه.

点击上面的链接可在线获取更多信息。

Flere oplysninger er tilgængelige online gennem linket ovenfor.

Bijkomende informatie is online beschikbaar via bovenstaande link.

Vous trouverez plus d'informations en ligne à l'aide du lien ci-dessus.

Zusätzliche Informationen finden Sie online über den oben angegebenen Link.

Ulteriori informazioni sono disponibili online utilizzando il link sopra riportato.

追加情報は上記リンクを使用してオンラインで利用可能です。

상기 링크를 통해 온라인에서 추가 정보를 볼 수 있습니다.

Informações adicionais estão disponíveis on-line, através do link acima.

Дополнительная информация доступна в интернете по ссылке, указанной выше.

Mediante el enlace anterior podrá acceder a información adicional en línea.

Ytterligare information finns online genom att använda länken ovan.

İnternet üzerinden daha fazla bilgi edinmek için yukarıdaki bağlantıyı kullanabilirsiniz.

هناك معلومات إضافية متاحة على الإنترنت باستخدام الرابط أعلاه.

Informazio osagarria eskuragarri dago goiko estekaren bidez.

Допълнителна информация можете да намерите онлайн, като използвате връзката по-горе.

Mitjançant l'enllaç anterior podreu accedir a informació addicional en línia.

使用上面的連結線上提供額外資訊。

Dodatne informacije možete pronaći na internetu sljedeći vezu iznad.

ከላይ የተቀመጠውን አገናኝ(ሊንክ) በመጠቀም መረጃዎች አንላይን ያገኛሉ፡፡

Lisätietoja on saatavissa verkosta käyttämällä yllä olevaa linkkiä.

Wubetumi anya nsɛm afoforo aka ho wɔ wɛbsait so denam asɛm a ɛwɔ atifi hɔ a wubemia so so.

Πρόσθετες πληροφορίες είναι διαθέσιμες ονλάιν χρησιμοποιώντας το σύνδεσμο παραπάνω.

מידע נוסף אפשר לקבל באינטרנט באמצעות הקישור לעיל.

További információ elérhető online, a fenti hivatkozás segítségével.

Viðbótarupplýsingar eru fáanlegar á netinu með því að smella á tengilinn hér fyrir ofan.

Plus indicium per superum situm potes invenire.

മുകളിലുള്ള ലിങ്ക് ഉപയോഗിച്ച് ഓൺലൈനിൽ കൂടുതല് വിവരങ്ങൾ ലഭ്യമാണ്.

Ytterligere informasjon er tilgjengelig på nettet via linken ovenfor.

Dodatkowe informacje są dostępne online pod powyższym odnośnikiem.

Informações adicionais estão disponíveis online a usar o link acima.

Informații suplimentare sunt disponibile online, utilizând link-ul de mai sus.

Dodatne informacije dostupne su na mreži putem gornjeg linka.

Ďalšie informácie sú dostupné online na vyššie uvedenom odkaze.

Table of Contents

Additional Information
Link to Additional Information Online 6

Getting Started
Safety Instructions 7
Consignes de Sécurité 9
How to Stabilize the Upright Bike 11
Electrical Power Requirements (Applicable for Units Using External Power Supply) 12
Check for Console Power 12
Power Assist Option / External Power Supply 12

Product Overview
Product Features 13
Product Labels 14
Label Locations 14
Connections 14
How to Adjust Seat 15
How to Adjust Pedal Straps 16

Assembly
Hardware 17
Tools Required 18
Assembly Procedure 19

Specifications
Product Specifications 34

Service and Technical Data
Preventive Maintenance Schedule 35
Preventive Maintenance Tips 35
Approved and Compatible Cleaners 35
Troubleshooting the Polar® Heart Rate Chest Strap 36
Recycle the Battery 36
How To's 36
Software Updates 36

Warranty
Warranty Information 38

Release Notes
Updates to Manual 39

Life Fitness® is a registered trademark.

Gym Wipes® is a registered trademark of the 2XL Corporation. PureGreen 24 is a trademark of Pure Green. Polar® is a registered trademark of Polar Electro Inc.

© Copyright 2026, Life Fitness, LLC. All Rights Reserved. Life Fitness, Hammer Strength, Cybex, ICG and SCIFIT are registered trademarks of Life Fitness, LLC and its affiliated companies and subsidiaries. Disclaimer: Images and specifications are current as of the date of publication and are subject to change.

Columbia Center III - 9525 Bryn Mawr Ave., Rosemont, IL 60018 • 847-288-3300
www.lifefitness.com • 1028291-0001 AC • 2026

1. Additional Information

Link to Additional Information Online

In addition to the content provided in this manual, please scan the following QR code for further product information, manuals, FAQs, parts, warranty detail, contact support, etc.

Life Fitness Atmos Upright Bike

https://lfn.fit/AtmosU

2. Getting Started

Safety Instructions

Owner of the equipment is responsible for providing the users of the equipment with all warnings and instructions.

Read all instructions before use.

CAUTION: Any changes or modifications to this equipment could void the product warranty.

WARNING: Health-related injuries may result from incorrect or excessive use of exercise equipment. Life Fitness STRONGLY recommends seeing a physician for a complete medical exam before undertaking an exercise program, particularly if the user has a family history of high blood pressure or heart disease, is over the age of 45, smokes, has high cholesterol, is obese, or has not exercised regularly in the past year. If, at any time while exercising, the user experiences faintness, dizziness, pain, or shortness of breath, he or she must stop immediately.

WARNING: To reduce the risk of burns, fire, electric shock, or injury, it is imperative to connect each product to a properly grounded electrical outlet.

WARNING: Heart rate monitoring systems may be inaccurate. Over exercising may result in serious injury or death. If you feel faint, stop exercising immediately.

WARNING: Do not use for stretching and do not attach straps or other devices.

WARNING: Keep batteries out of reach of children.

Some chest straps may contain a removable battery.

- Swallowing may lead to serious injury in as little as 2 hours or death, due to chemical burns and potential perforation of the esophagus.
- If you suspect your child has swallowed a battery, immediately call your local poison control for fast, expert advice.
- Examine devices and make sure the battery compartment is correctly secured, e.g. that the screw or other mechanical fastener is tightened. Do not use if compartment is not secure.
- Dispose of used button batteries immediately and safely. Flat batteries can still be dangerous.
- Tell others about the risk associated with button batteries and how to keep their children safe.

WARNING: Allow a distance of 16 in. / 41 cm between the widest part of the bike and other objects on either side. Provide at least 3 ft. / 0.9 m between the front or rear of the bike to any other objects and 2 ft. / 0.6 m in the direction the equipment is accessed from.

WARNING: This product can expose you to chemicals including 1,3-butadiene, which is known to the State of California to cause cancer and birth defects or other reproductive harm. For more information go to www.P65Warnings.ca.gov.

DANGER: To reduce the risk of electrical shock or injury from moving parts, always unplug product before cleaning or attempting any maintenance activity.

- Life Fitness does not warrant nor guarantee that component parts used in the manufacture of products offered under the Life Fitness brand are latex-free. Users of these products must take all necessary precautions to prevent accidental contact that could lead to an adverse latex reaction.
- Never operate the product if it has a damaged power cord or electrical plug, or if it has been dropped, damaged, or even partially immersed in water. Contact Customer Support Services.
- Position the product so that the power cord plug to the wall is accessible to the user. Make sure that the power cord is not knotted or twisted and that it is not trapped under any equipment or other objects.
- If the electrical supply cord is damaged, it must be replaced by the manufacturer, an authorized service agent, or a similarly qualified person to avoid a hazard.
- Always follow the console instructions for proper operation.
- This appliance is not intended for use by persons (including children) with reduced physical, sensory, or mental capabilities, or lack of experience or knowledge unless they have supervision or been given instruction concerning the use of the appliance by a person responsible for their safety.
- Do not use this product outdoors, near swimming pools or in areas of high humidity.
- Never operate the product with the air openings blocked. Keep air openings free of lint, hair, or any other obstructing material.
- Never insert objects into any opening in these products. If an object should drop inside, turn off the power, unplug the power cord from the outlet, and carefully retrieve it. If the item cannot be reached, contact Customer Support Services.
- Never place liquids of any type directly on the unit, except in an accessory tray or holder. Containers with lids are recommended.

- Do not use these products in bare feet. Always wear shoes. Wear shoes with rubber or high-traction soles. Do not use shoes with heels, leather soles, cleats or spikes. Make sure no stones are embedded in the soles.
- Keep all loose clothing, shoelaces, and towels away from moving parts.
- Do not reach into, or underneath, the unit or tip it on its side during operation.
- This equipment is not intended for use by children. Keep children under the age of 14 away from the machine.
- Do not allow other people to interfere in any way with the user or equipment during a workout.
- Allow LCD consoles to “normalize” with respect to temperature for one hour before plugging the unit in and using.
- When the product is not in use, Life Fitness recommends unplugging the product. Disconnect from the electrical outlet when not in use, and before putting on or taking off parts.
- Use these products for their intended use as described in this manual. Do not use attachments that have not been recommended by the manufacturer.
- Free standing equipment shall be positioned on a flat, stable and horizontal base.
- Do not stand or sit on plastic shrouds.
- Use caution when mounting or dismounting the bike. Use the stationary handlebar whenever additional stability is required.
- Read all warnings on each product prior to starting a workout.
- If warnings are missing or damaged, please contact Customer Support Services immediately for replacement warning labels. Warning labels are shipped with every product and should be installed before product is used. Life Fitness is not responsible for missing or damaged warning labels.

Consignes de Sécurité

Veuillez lire toutes les instructions avant usage.

⚠ **ATTENTION :** Toute modification apportée à cet équipement pourrait en annuler la garantie.

⚠ **AVERTISSEMENT :** Des problèmes de santé peuvent survenir en cas d'une utilisation incorrecte ou excessive de l'équipement. Life Fitness Recommande VIVEMENT aux utilisateurs de passer un examen médical complet avant d'entamer un programme d'entraînement, et tout particulièrement dans les cas suivants : antécédents familiaux d'hypertension (pression sanguine trop élevée) ou de pathologies cardiaques, utilisateurs de 45 ans ou plus, tabagisme, hypercholestérolémie (taux de cholestérol sanguin trop élevé), obésité, absence d'exercice physique depuis un an ou plus. Si, pendant l'usage de l'appareil, l'utilisateur éprouve un malaise, des vertiges, des douleurs ou des difficultés à respirer, il doit s'arrêter immédiatement.

⚠ **AVERTISSEMENT :** Pour réduire les risques de brûlures, d'incendies, de décharges électriques ou de blessures, il est essentiel de brancher chaque appareil sur une prise électrique correctement mise à la terre.

⚠ **AVERTISSEMENT :** Les systèmes de surveillance de la fréquence cardiaque peuvent être inexacts. Un exercice trop intensif peut entraîner des blessures graves, voire mortelles. En cas de malaise, interrompez immédiatement la séance d'entraînement.

⚠ **AVERTISSEMENT :** Ne pas utiliser pour des étirements et ne pas y attacher des sangles ou autres dispositifs.

⚠ **AVERTISSEMENT :** Tenir les piles hors de portée des enfants.

Certaines sangles de poitrine peuvent contenir une pile jetable.

- L'ingestion de la pile peut provoquer des blessures graves voire la mort en moins de 2 heures en raison du risque de brûlures chimiques et de perforation de l'œsophage.
- Si vous pensez que votre enfant a avalé une pile, contactez immédiatement le centre anti-poison local pour obtenir des conseils spécifiques.
- Contrôlez l'appareil et assurez-vous que le compartiment pour pile est bien fermé, par exemple que la vis ou toute autre fixation mécanique est bien serrée. Ne pas utiliser le produit si le compartiment n'est pas bien fermé.
- Éliminer les piles bouton immédiatement et de manière sûre. Les piles bouton sont une source de danger.
- Informez les tiers des risques associés aux piles bouton et de la manière dont ils doivent agir pour protéger leurs enfants.

⚠ **AVERTISSEMENT :** Laissez une distance de 41 cm (16 po) entre la partie la plus large du vélo et les objets se trouvant de part et d'autre. Laissez un dégagement d'au moins 90 cm (3 pieds) entre l'avant ou l'arrière du vélo et les objets alentour, et d'au moins 60 cm (2 pieds) dans la direction qui permet d'accéder à l'appareil.

⚠ **DANGER :** Pour réduire les risques de chocs électriques ou de blessures en raison des pièces mobiles, débranchez toujours les produits avant de les nettoyer ou de procéder aux tâches d'entretien.

- Life Fitness ne garantit pas que les composants utilisés dans la fabrication des produits proposés dans la bande Life Fitnesssont exempts de latex. Les utilisateurs de ces produits doivent prendre toutes les précautions nécessaires pour éviter un contact accidentel qui pourrait entraîner une réaction indésirable au latex.
- Ne faites jamais fonctionner le produit dont la fiche ou le cordon d'alimentation sont altérés ni aucun appareil qui serait tombé, aurait été endommagé ou même partiellement plongé dans l'eau. Contactez le service à la clientèle.
- Placez l'appareil de façon à ce que l'utilisateur ait accès à la fiche du cordon d'alimentation. Assurez-vous que le cordon d'alimentation n'est pas noué ou tordu et qu'il n'est pas coincé sous un autre appareil ou sous tout autre objet.
- Si le cordon d'alimentation électrique est endommagé, il doit être remplacé par le fabricant, par un réparateur agréé ou par une personne qualifiée afin d'éviter tout danger.
- Pour un fonctionnement correct, suivez toujours les instructions de la console.
- Cet appareil n'est pas destiné à être utilisé par des personnes ou des enfants présentant des capacités physiques, sensorielles ou mentales réduites, ou un manque d'expérience et de connaissances, sauf en cas de supervision ou d'instructions relatives à son utilisation par une personne responsable de leur sécurité.
- N'utilisez pas ce produit à l'extérieur, près d'une piscine ou dans des endroits très humides.
- N'utilisez jamais le produit avec les ouvertures d'air bloquées. Maintenez les bouches d'aération exemptes de peluches, de cheveux ou de toute autre obstruction.
- N'introduisez jamais d'objet dans les ouvertures de cet appareil. Si un objet tombe dans l'appareil, mettez ce dernier hors tension, débranchez le cordon d'alimentation et récupérez l'objet avec précaution. Si vous ne pouvez pas l'atteindre, contactez le service d'assistance à la clientèle.
- Ne placez jamais de liquides d'aucune sorte directement sur l'appareil, sauf si vous disposez d'un support ou d'un plateau pour accessoires. Nous vous recommandons de n'utiliser que des récipients pourvus d'un couvercle.
- N'utilisez pas ces produits avec les pieds nus. Portez toujours des chaussures. Portez des chaussures à semelles en caoutchouc ou antidérapantes. N'utilisez pas de chaussures à talon, à semelle en cuir, à crampons ou à pointes. Assurez-vous qu'aucun caillou ne s'est incrusté dans les semelles.

- Éloignez les vêtements amples, les lacets de chaussure et les serviettes des parties mobiles de l'appareil.
- Ne placez pas les mains à l'intérieur ou sous l'appareil. Ne le faites pas basculer sur le côté durant son fonctionnement.
- Cet équipement n'est pas destiné à être utilisé par les enfants. Tenez les enfants âgés de moins de 14 ans à l'écart de la machine.
- Ne laissez aucune personne gêner l'utilisateur ou le fonctionnement de l'appareil pendant l'exercice.
- Laissez les consoles LCD s'adapter à la température ambiante pendant une heure avant de brancher l'appareil et de l'utiliser.
- Life Fitness recommande de débrancher le produit quand il n'est pas utilisé. Débranchez-le systématiquement après son utilisation et avant l'ajout et le retrait de pièces.
- Utilisez cet équipement uniquement aux fins auxquelles il est destiné et de la manière décrite dans le présent manuel. N'utilisez pas d'accessoires non recommandés par le fabricant.
- Les équipements autonomes doivent être placés sur une base plane, stable et horizontale.
- Ne vous mettez pas debout ni assis sur les caches en plastique.
- Montez et descendez avec précaution du vélo. Utilisez les poignées fixes lorsque vous avez besoin de renforcer votre équilibre.
- Lisez les avertissements sur chaque produit avant de commencer à vous entraîner.
- Si certaines étiquettes d'avertissement sont manquantes ou endommagées, contactez immédiatement le service d'assistance à la clientèle. Nous vous en fournirons de nouvelles. Les étiquettes d'avertissement sont expédiées avec les appareils et doivent être installées avant utilisation de ces derniers. Life Fitnessn'est pas responsable des étiquettes manquantes ou endommagées.

How to Stabilize the Upright Bike

Read the entire manual before setting up the bike. After following all Safety Instructions, move the bike to the location where it will be used. Allow a clearance of 2 ft. (0.6 m) in the directions the bike is accessed from and 3 ft. (1 m) between the front or rear of the bike or any other objects.

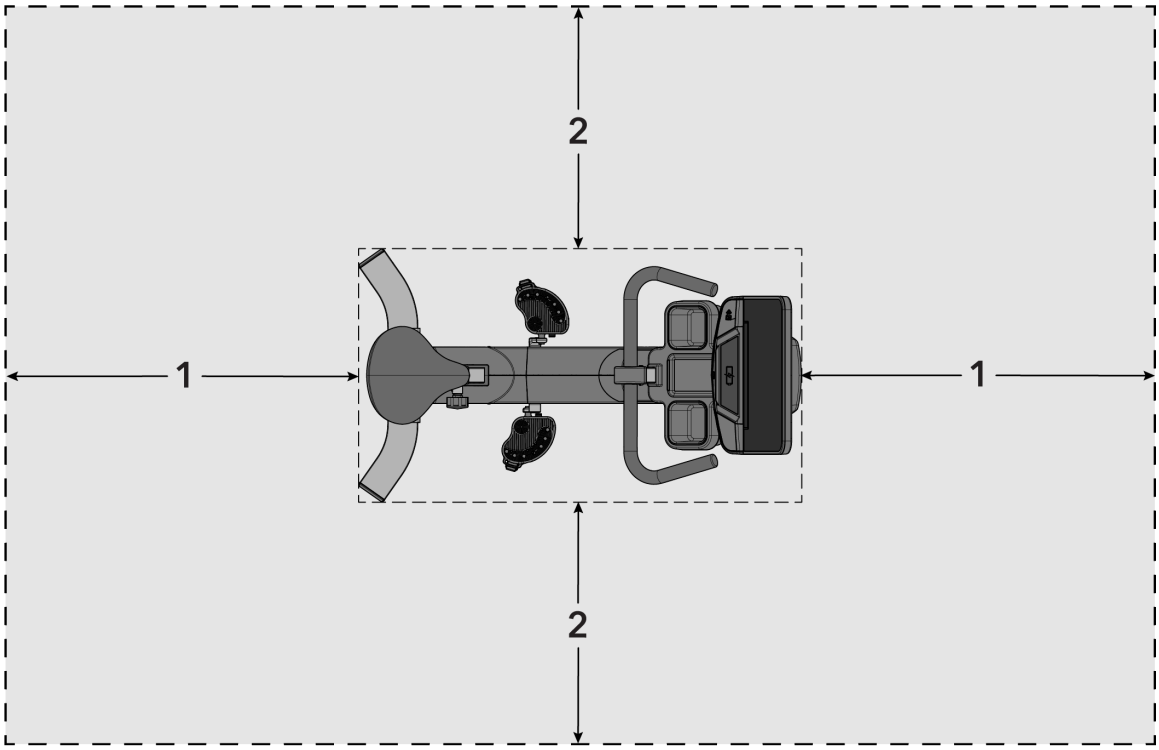

1	3 ft. / 1 m
2	2 ft. / 0.6 m

After placing the unit in position, check the unit's stability by attempting to rock it from side to side. Any slight rocking indicates that the unit must be leveled. Determine which foot is not resting completely on the floor. Loosen the jam nut with an open-end M17 wrench and rotate the leg leveler to lower it. Verify that the unit is stable. Repeat the adjustment as necessary until the unit no longer rocks. Lock the adjustment by tightening the jam nut against the stabilizing bar.

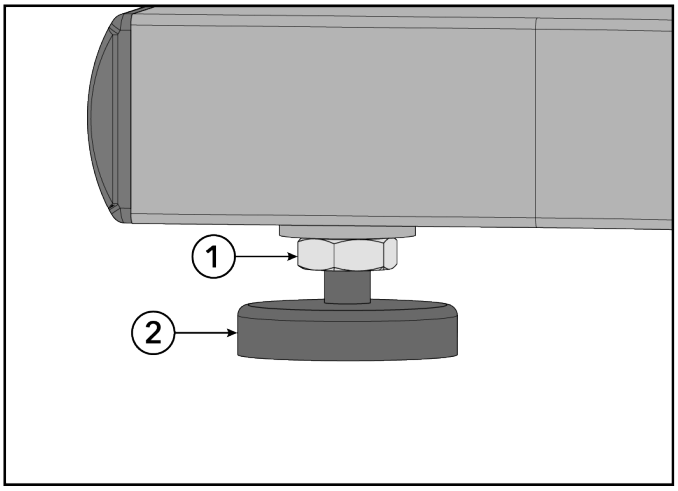

Item	Description	Qty.
1	Jam Nut	4
2	Leg Leveler	4

Electrical Power Requirements (Applicable for Units Using External Power Supply)

- Units equipped with SL Consoles are self powered. An optional external power supply brick is available for purchase if desired.
- Units equipped with SE4 Consoles require a 24 VDC power supply.

⚠ **WARNING:** Use only the supplied power brick and line cord. Do not use any modification to connect to a 2-prong outlet. Product must be connected to a properly rated 3-prong outlet.

Console	Supply Voltage	Frequency	Output Voltage	Output Current
SL / SE4	100 - 240 VAC	50 - 60 Hz	24 VDC	3.75 A

Outlet Voltage	Commercial Units Outlet & Breaker (Amps)	Consumer / Home Units Outlet & Breaker (Amps)
120 VAC	20 (no more than 8 bikes per breaker)	15 (no more than 6 bikes per breaker)
230 VAC	12 (no more than 8 bikes per breaker)	12 (no more than 8 bikes per breaker)

NOTE: Do not modify the plug provided with this product. If the plug does not fit into an available electrical outlet, have a proper outlet installed by a qualified electrician.

NOTE: Make sure the power brick cord is securely connected to the base unit. A loose connection may result in the unit not receiving external power.

Check for Console Power

The SL Console is powered by a rechargeable 6-volt battery. Check the battery by pressing the GO button. The console should beep and light up. The console will display the Life Fitness logo. If a prompt doesn't appear, mount the unit and begin pedaling. The console should light up and programming a workout should be possible. Pedal for 10 - 20 minutes at 50 rpm or faster during a workout for optimum battery charging. The pedal action during workouts keeps the battery charged. Optional external power supply can be used. If the unit is externally powered, battery maintenance is automatic and pedaling is not required. Use only the power supply provided by Life Fitness to insure against unsafe operation.

Power Assist Option / External Power Supply

The bike's optional Power Assist feature makes it possible for the console to be powered by an external electrical source. This eliminates the need to pedal at a minimum speed to supply constant power to the console. With this option, users who ride the bike for rehabilitative exercise may pedal at a rate below the minimum without losing console power.

Plug the power to the external power connector on the front end of the bike. Plug the cord into an AC outlet. Use only the external power supply provided by Life Fitness in order to insure against unsafe operation.

⚠ **CAUTION:** Connectors should easily fit into the receptacles. Forcing a connection may lead to damage to the barrel connector and/or receptacle and may void product warranty. If the power supply barrel doesn't fit easily into the receptacle then the wrong power supply is being used.

The Power Assist feature option requires an optional kit. Contact Life Fitness Customer Support Services to order the kit.

3. Product Overview

Product Features

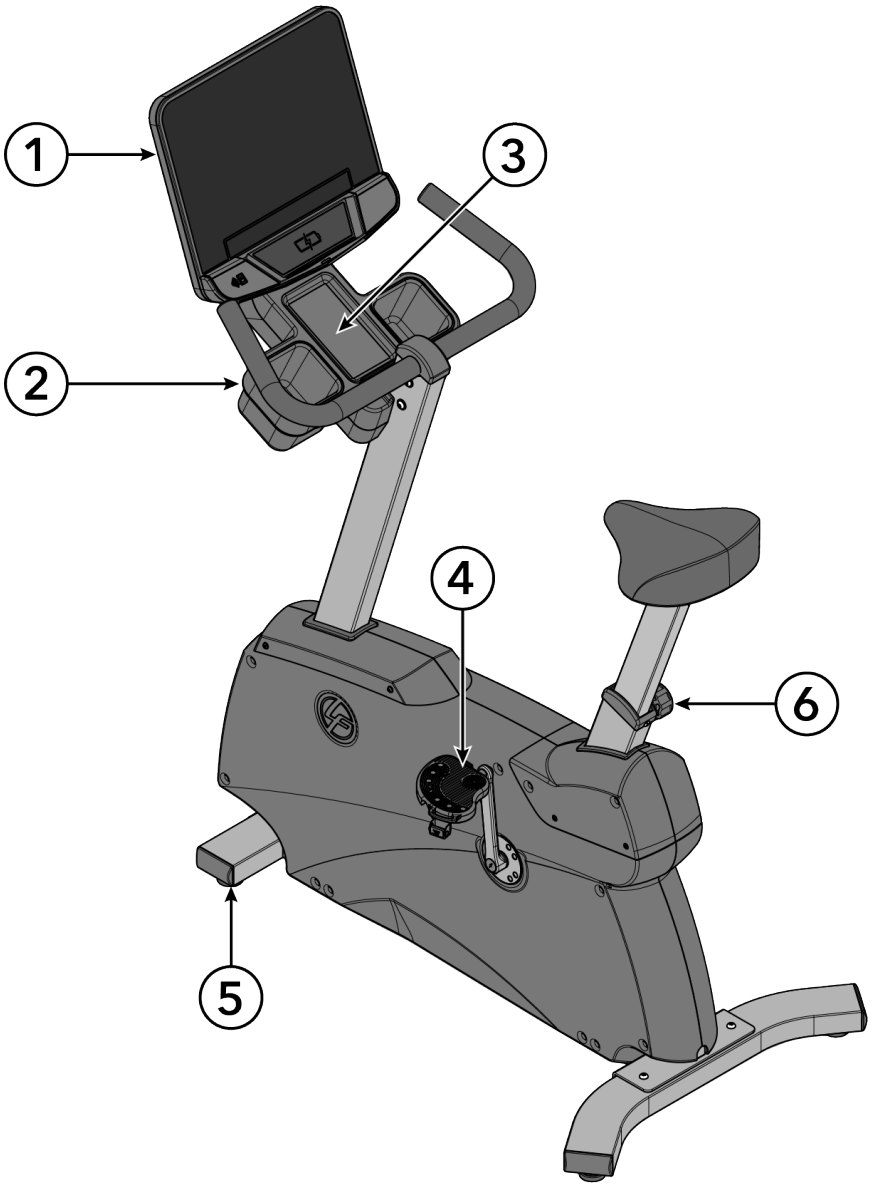

Item	Description	Qty.
1	Console	1
2	Cup Holder	2
3	Accessory Tray	1
4	Pedal	2
5	Leg Leveler	4
6	Seat Adjustment Knob	1

NOTE: SE4 Console shown for reference.

Product Labels

Compliance / Serial Number

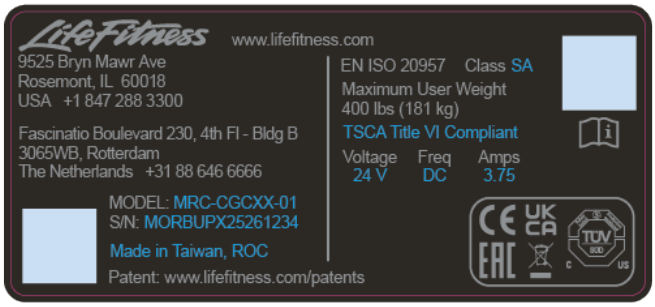

Label Locations

IMPORTANT: Verify all labels / decals listed are placed on the product and in the location shown. Replace any missing or damaged labels.

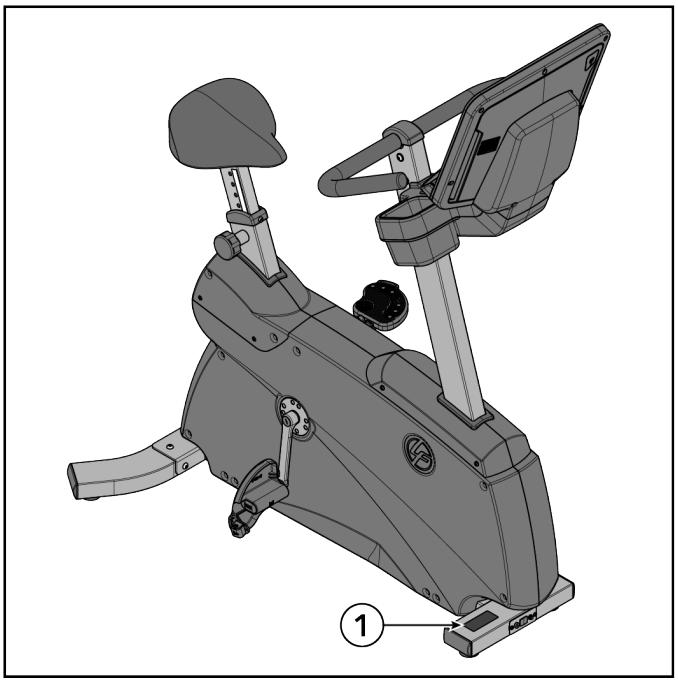

Item	Description	Qty.
1	Label, Compliance, Consumer and Commercial	1

Connections

The following connection receptacle is located at front of bike.

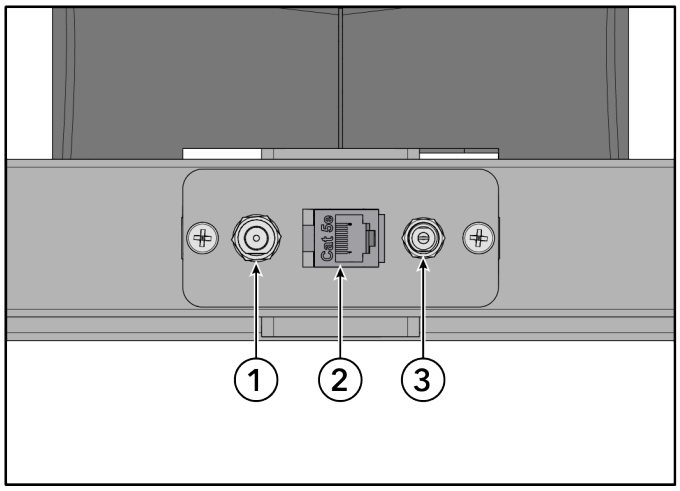

Item	Description
1	COAX
2	CAT5e Network / Ethernet
3	Power Input

How to Adjust Seat

A properly adjusted seat is important in any bike-oriented exercise activity. If the seat is too close, excessive strain will be placed on the knees and quadriceps muscles. If the seat is too far, the resulting reaching action will irritate the feet, ankles, hips and knees.

Sit on the seat and place the balls of the feet on the pedals. An optimum position allows movement through the bottom of the stroke without locking the knees, shifting in the seat or forcefully extending the hips. The knees should have a slight bend at the point of fullest leg extension.

If the seat needs to be adjusted, dismount the bike and pull out the seat adjustment knob located on the side of the seat tube. Slide the seat post up or down as necessary to the proper position and release the knob. Check the seat distance and readjust as necessary.

⚠ **CAUTION:** Do not attempt to adjust the seat while pedaling the bike or sitting on the seat. Doing so may cause injury or result in an uncomfortable workout.

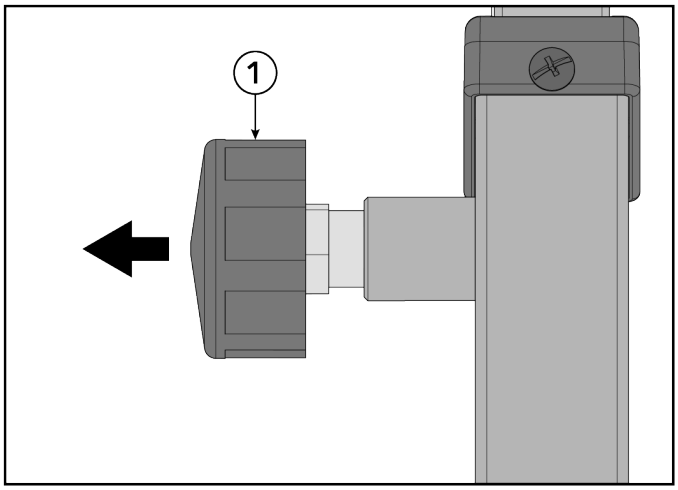

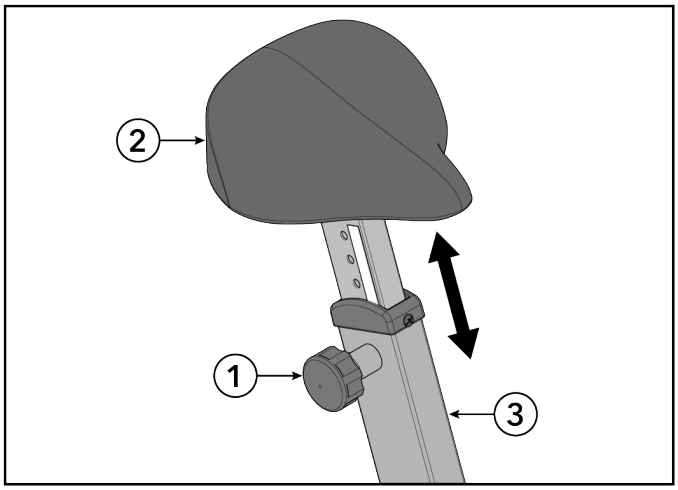

Item	Description	Qty.
1	Seat Adjustment Knob	1
2	Seat	1
3	Seat Tube	1

How to Adjust Pedal Straps

The bike pedal straps keep the user's shoes on the pedals during a workout. The straps should fit comfortably but tight enough to prevent shoes from slipping at any point in the pedaling rotation. A user should test and adjust the tightness of the straps before starting a workout.

Use one hand to push the strap latch upward to loosen the ribbed strap. Use the other hand to pull the ribbed strap out from underneath the strap latch. Rest the foot on the pedal. Wrap the ribbed strap over the foot to determine the desired length. Push the strap latch upward and thread the ribbed strap through the strap latch to select the appropriate slot. Let go of the strap latch to secure position.

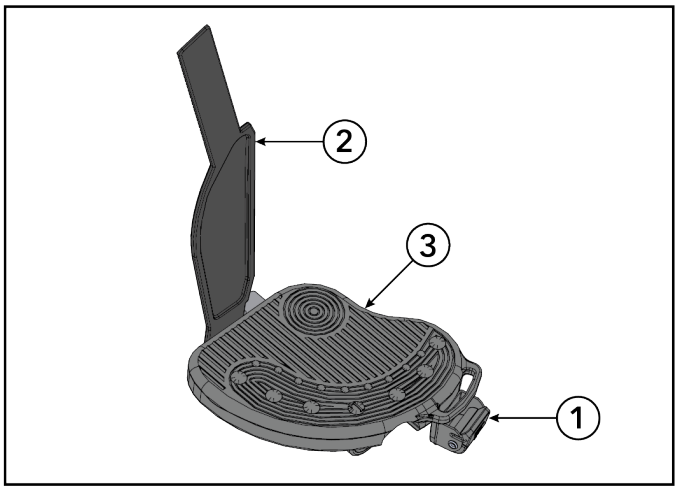

Item	Description	Qty.
1	Strap Latch	2
2	Strap	2
3	Pedal	2

4. Assembly

Hardware

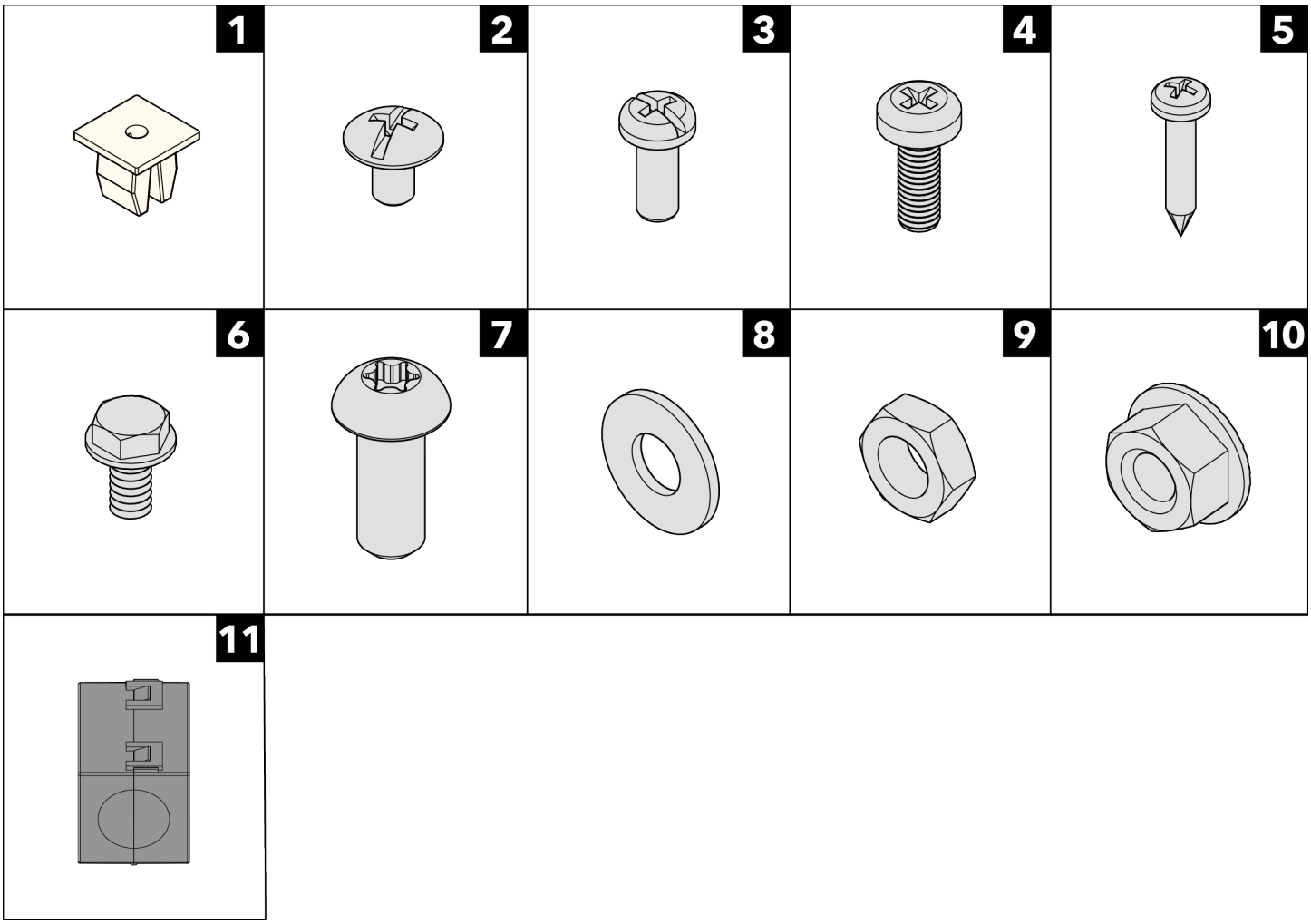

Item	Description	Qty.
1	Grommet	5
2	Screw, Pad HD M4 x 0.7-6mm	2
3	Screw, PHL 5mm 0.8 x 12mm	4
4	Screw, M5 x 0.8 x 14, PHL, PAN, MS, ST, ZN	5
5	Screw, M4.2 x 0.7 6G6G x 19, DIN, PHL, PAN, AB, ST, ZB	5
6	Screw, #10 x 6 UNS, HXW, L, B, ST, GR	1
7	Screw, M8 x 1.25 6G6H x 20, BUT, TRX, CS, ST, ZB	12
8	Washer, Seat Stop	12
9	Nut, Seat MTG	4
10	Nut, M8 x 1.25-6H, Hex, Lock, Zinc, Class 10	4
11	Ferrite; Suppression, Core-Case	1

Tools Required

- 8 mm socket wrench
- 13 mm socket wrench
- 15 mm pedal wrench
- T40 Torx wrench
- Phillips screwdriver
- Torque screwdriver
- Torque wrench
- Utility knife

NOTE: Do NOT use impact drivers to install hardware.

Assembly Procedure

Two people are recommended for this procedure.

TIP: Read and understand all instructions thoroughly before assembling this unit. Check all items carefully. If there is damage, see the Customer Service section of this manual for proper procedure to return, replace, or reorder parts.

Unpacking and Disposal of Packaging

Carefully unpack the fitness equipment as described in the assembly manual and inspect all components for damage. Make sure to remove all packaging materials before assembling and using the product. Keep small parts and plastic materials out of reach of children to prevent suffocation and injury hazards.

All packaging materials used for this product are designed to be recyclable or reusable. Please dispose of packaging materials responsibly and in accordance with local, regional, and national regulations. Separate materials such as cardboard, paper, plastics, and protective foams and place them in the appropriate recycling or waste collection streams.

Do not dispose of packaging materials with household waste unless permitted by local regulations. In regions where applicable, follow specific environmental directives (such as recycling, extended producer responsibility, or waste electrical and electronic equipment requirements) to minimize environmental impact.

By properly recycling or disposing of packaging materials, you help conserve resources and support environmental sustainability. See the following Cardio and Strength Product Install Packaging Removal and Disposal Knowledge Base article for additional information.

Unpackage Monocolumn

Base power and communication cables are pre-routed through monocolumn.

Lay monocolumn off to one side of base assembly.

IMPORTANT: Do not pinch or twist cables while handling monocolumn.

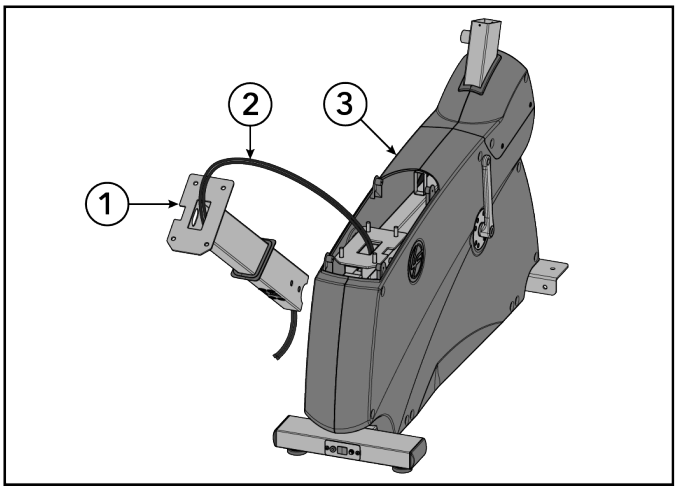

Item	Description	Qty.
1	Monocolumn	1
2	Cables	2
3	Base Assembly	1

Install Rear Stabilizer

1. Install screws and washers securing top of rear stabilizer to base frame using a T40 Torx wrench.

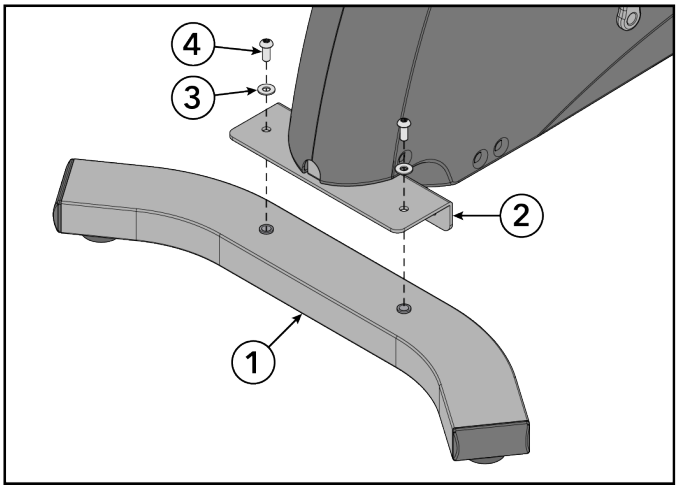

Item	Description	Qty.
1	Rear Stabilizer	1
2	Base Frame	1
3	Washer, Seat Stop	2
4	Screw, M8 x 1.25 6G6H x 20, BUT, TRX, CS, ST, ZB	2

Hand tighten hardware.

2. Install screws and washers securing side of rear stabilizer to base frame using a T40 Torx wrench.

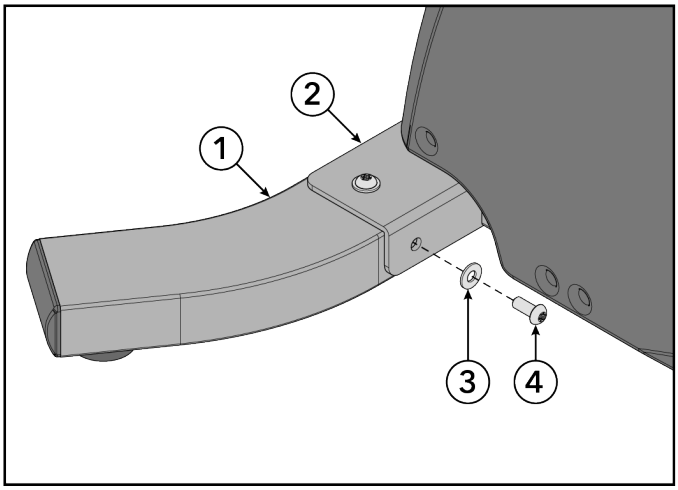

Item	Description	Qty.
1	Rear Stabilizer	1
2	Base Frame	1
3	Washer, Seat Stop	2
4	Screw, M8 x 1.25 6G6H x 20, BUT, TRX, CS, ST, ZB	2

Hand tighten hardware.

3. Tighten screws on side of rear stabilizer to 25 ft-lb / 34 Nm.
4. Tighten screws on top of rear stabilizer to 25 ft-lb / 34 Nm.

Install Seat

1. Loosen screw in seat tube using a Phillips screwdriver.

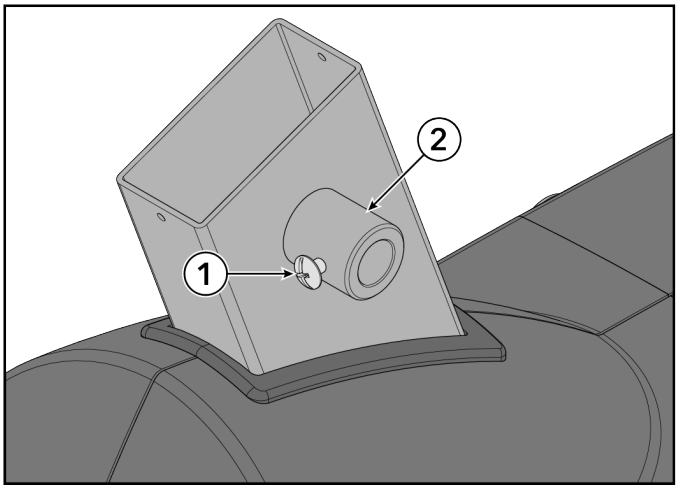

Item	Description	Qty.
1	Screw, Pad HD M4 x 0.7-6mm	1
2	Seat Tube	1

2. Screw seat adjustment knob into seat tube until wide knob surface is flush with inner tube wall.

   NOTE: Apply white lithium grease to threads on seat adjustment knob.

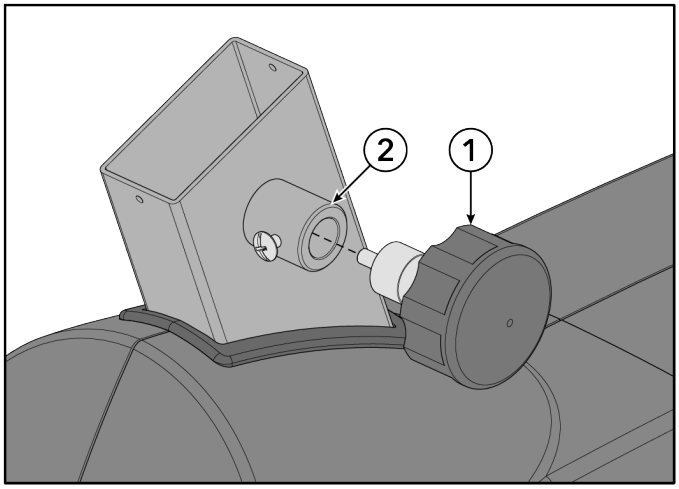

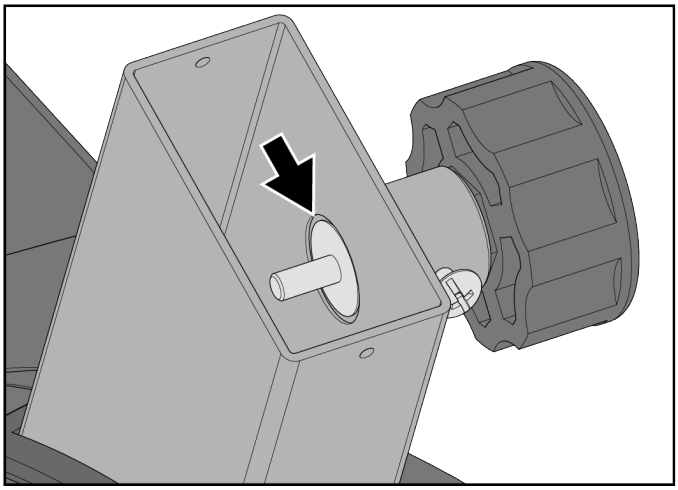

Item	Description	Qty.
1	Seat Adjustment Knob	1
2	Seat Tube	1

3. Tighten screw until it makes contact with seat adjustment knob then loosen screw approximately half turn.

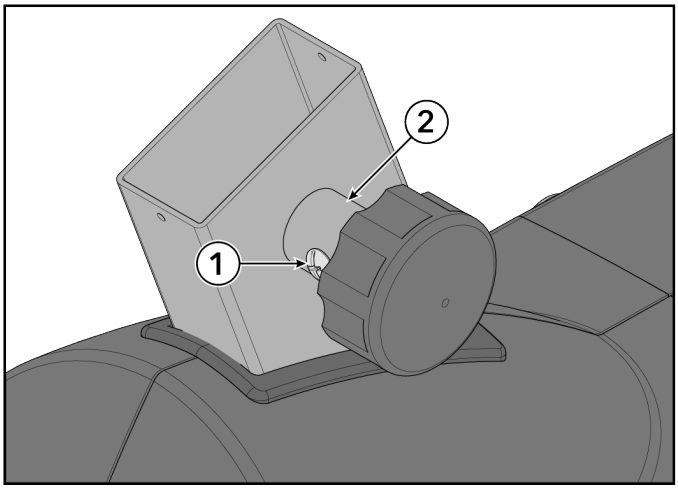

Item	Description	Qty.
1	Screw, Pad HD M4 x 0.7-6mm	1
2	Seat Tube	1

4. Install nuts and washers securing seat to seat post using a 13mm socket wrench.

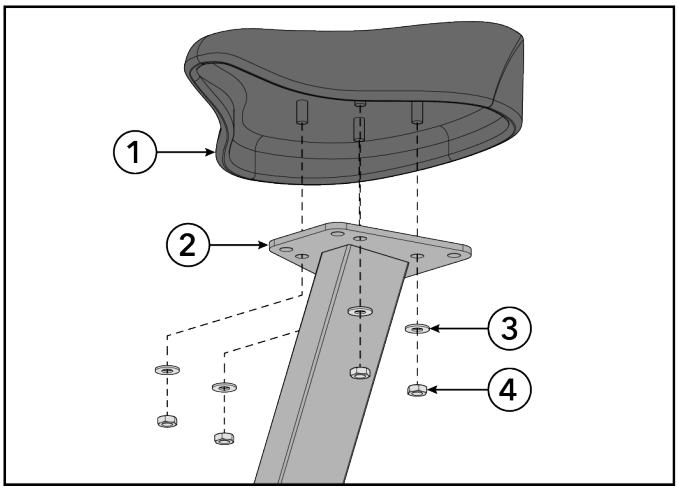

Item	Description	Qty.
1	Seat	1
2	Seat Post	1
3	Washer, Seat Stop	4
4	Nut, Seat MTG	4

Tighten hardware to 25 ft-lb / 34 Nm.

5. Pull seat adjustment knob out and slide seat post down seat tube.

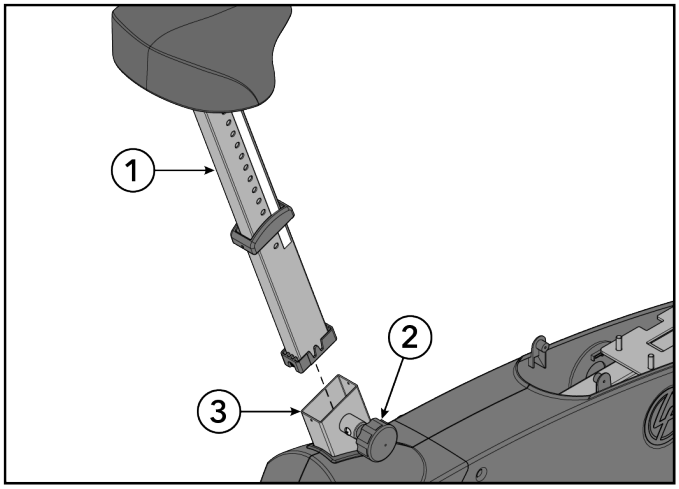

Item	Description	Qty.
1	Seat Post	1
2	Seat Adjustment Knob	1
3	Seat Tube	1

6. Install screws securing seat cap to seat tube using a Phillips screwdriver.

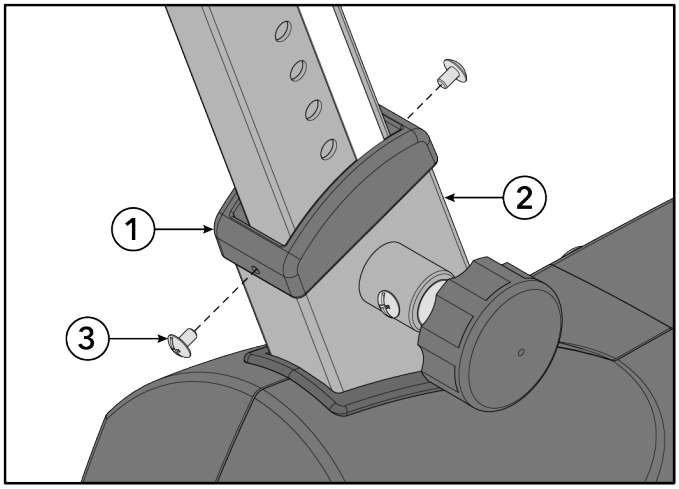

Item	Description	Qty.
1	Seat Cap	1
2	Seat Tube	1
3	Screw, Pad HD M4 x 0.7-6mm	2

Tighten hardware to 13 in-lb / 1.5 Nm.

Install SE4 Cables

The following procedure shows how to install cables for the SE4 Console. If SL Console is being installed, skip to Install Monocolumn topic.

1. Tip unit onto side.

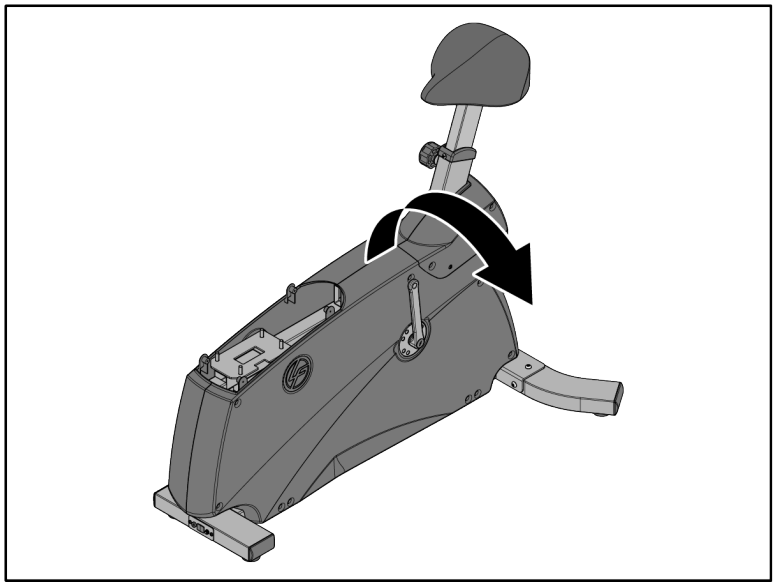

2. Remove screw securing comport panel to base frame using a Phillips screwdriver.

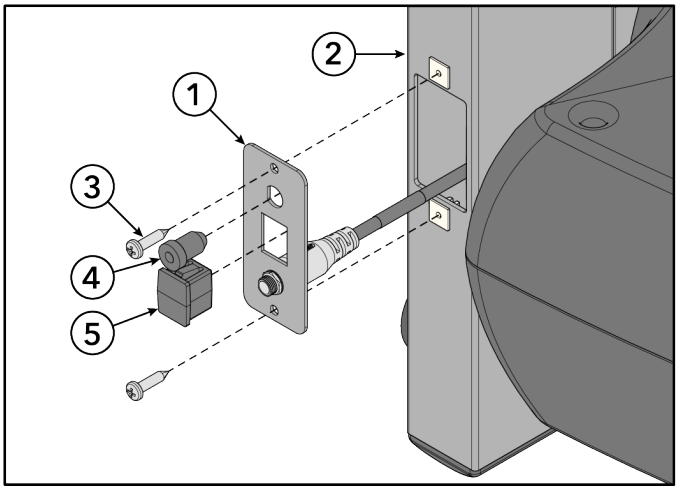

Item	Description	Qty.
1	Comport Panel	1
2	Base Frame	1
3	Screw, PHL PAN M5 x 0.8-12	2
4	Plug, COAX	1
5	Plug, RJ45 Receptacle	1

3. Remove plugs from comport panel.

4. Route SE4 cables down through hole in front of monocolumn and out bottom.

TIP: There is a pull wire pre-installed in the frame to assist with SE4 cable installation. Twist the pull wire around the ends of the SE4 cables and pull from the other end to install the cables through the frame.

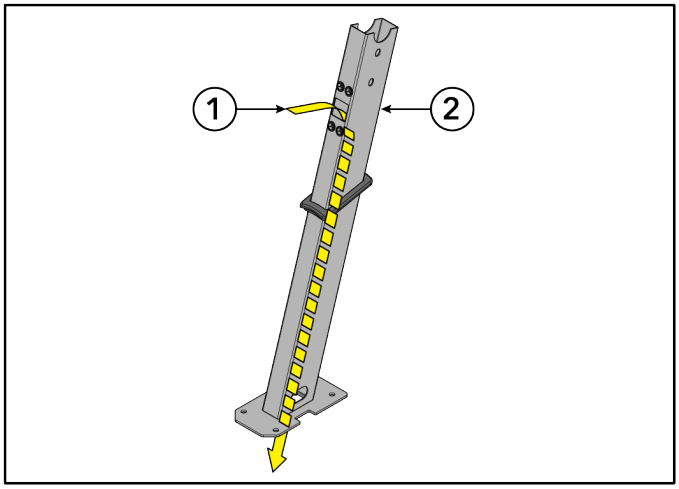

Item	Description	Qty.
1	Cables (CAT5e and COAX)	2
2	Monocolumn	1

5. Route SE4 cables down hole in base frame and out through comport hole.

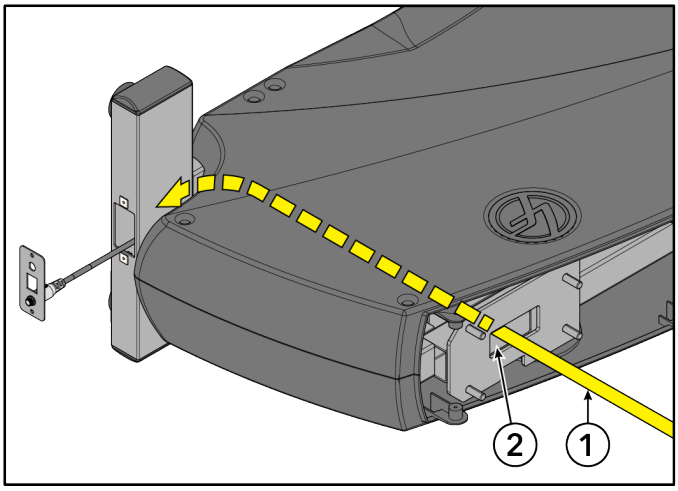

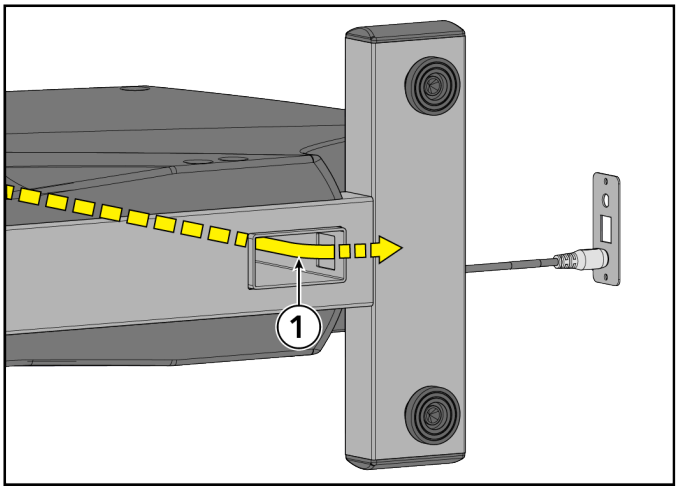

Item	Description	Qty.
1	Cables (CAT5e and COAX)	2
2	Base Frame	1

6. Plug cables into couplers. Insert couplers into comport panel.

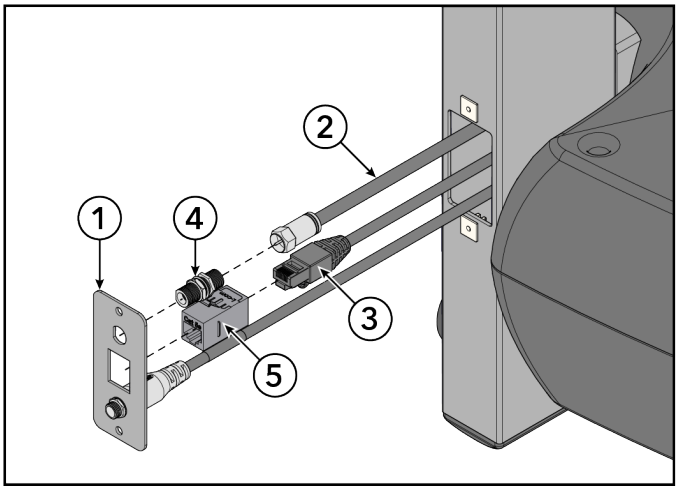

Item	Description	Qty.
1	Comport Panel	1
2	Cable, COAX	1
3	Cable, CAT5e	1
4	Coupler, COAX	1
5	Coupler, CAT5e	1

7. Install screws securing comport panel to base frame using a Phillips screwdriver.

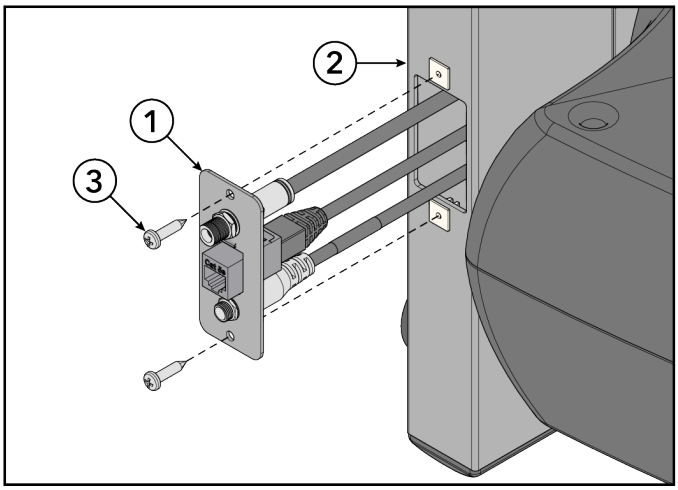

Item	Description	Qty.
1	Comport Panel	1
2	Base Frame	1
3	Screw, PHL PAN M5 x 0.8-12	2

Tighten hardware to 13 in-lb / 1.5 Nm.

8. Pull all excess cable up through monocolumn.
9. Tip unit upright.

   NOTE: Make sure to hold cables so they don't pull back through monocolumn.

Install Monocolumn

1. Install nuts securing monocolumn to base frame using a 13mm socket wrench.

   ATTENTION: Do not drop hardware down between base frame and main side shrouds!

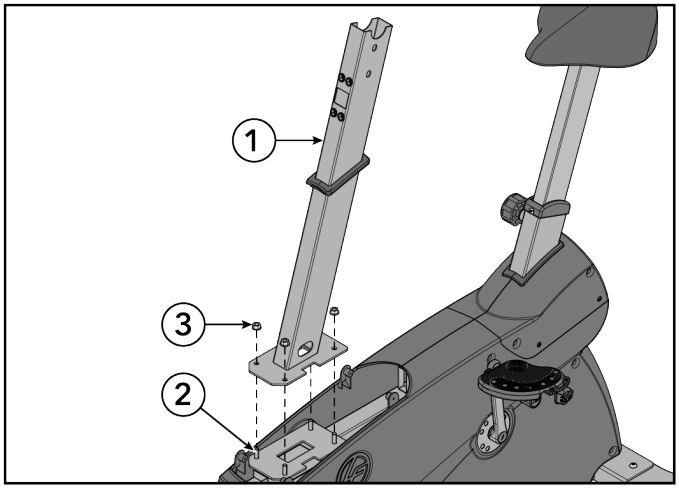

Item	Description	Qty.
1	Moncolumn	1
2	Base Frame	1
3	Nut, M8 x 1.25-6H, Hex, Lock, Zinc, Class 10	4

Tighten hardware to 25 ft-lb / 34 Nm.

2. Align gasket between front upper shrouds. Press front upper shrouds together.

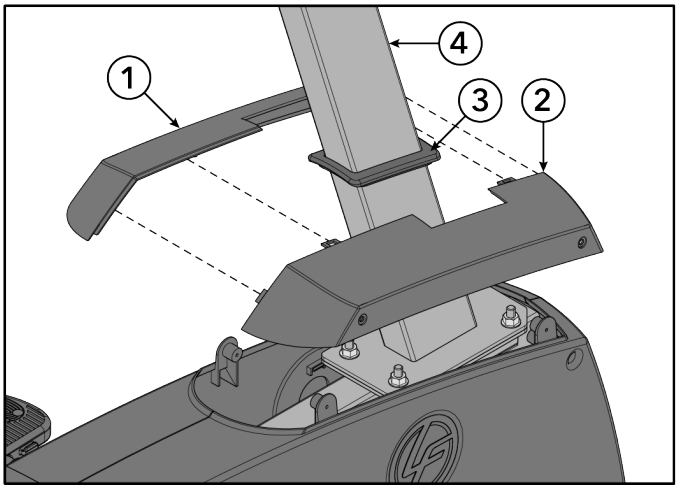

Item	Description	Qty.
1	Front Upper Shroud, Left	1
2	Front Upper Shroud, Right	1
3	Gasket	1
4	Moncolumn	1

3. Slide front upper shrouds and gasket down monocolumn.

4. Install screws securing front upper shrouds to main side shrouds using a Phillips screwdriver.

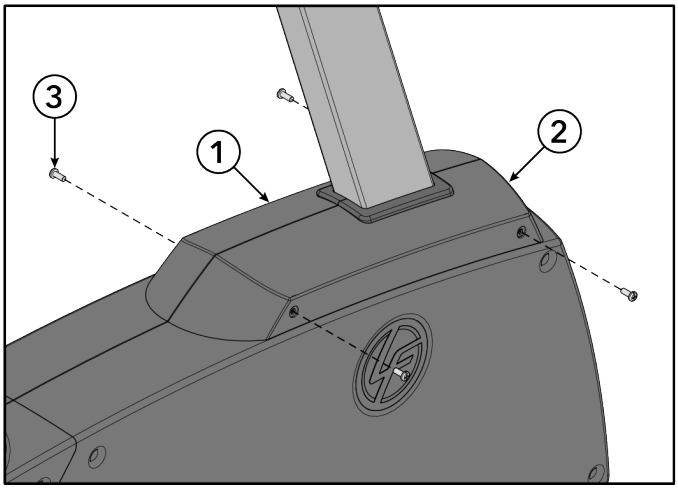

Item	Description	Qty.
1	Front Upper Shroud, Left	1
2	Front Upper Shroud, Right	1
3	Screw, PHL 5mm 0.8 x 12mm	4

Tighten hardware to 13 in-lb / 1.5 Nm.

Install Console Weldment

1. Cut cable ties securing cables together.
2. Route cables up console weldment.

   NOTE: Twist pull-wire around cable ends to assist with cable routing.

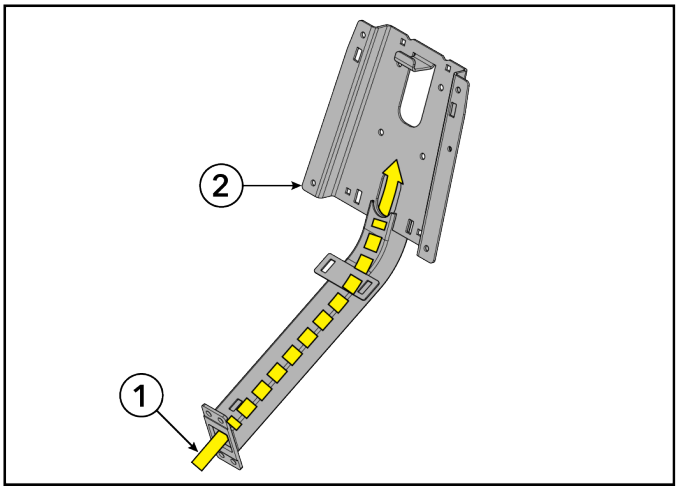

Item	Description	Qty.
1	Cables	-
2	Console Weldment	1

NOTE: Ground cable routes up through and out back of console weldment.

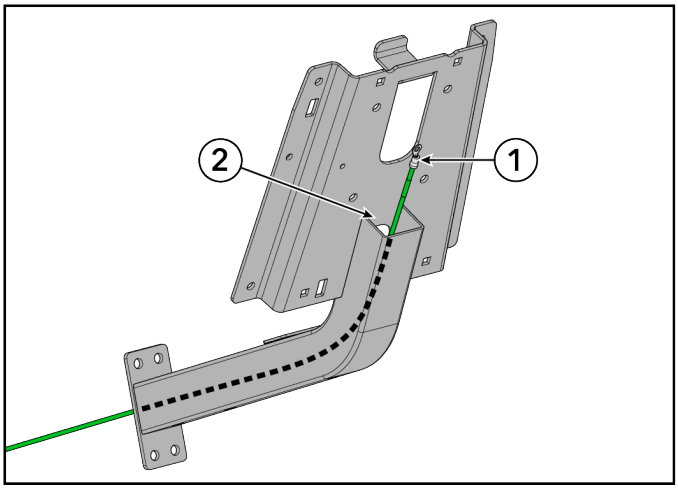

Item	Description	Qty.
1	Ground Cable	1
2	Console Weldment	1

3. Install screws securing console weldment to monocolumn using a T40 Torx wrench.

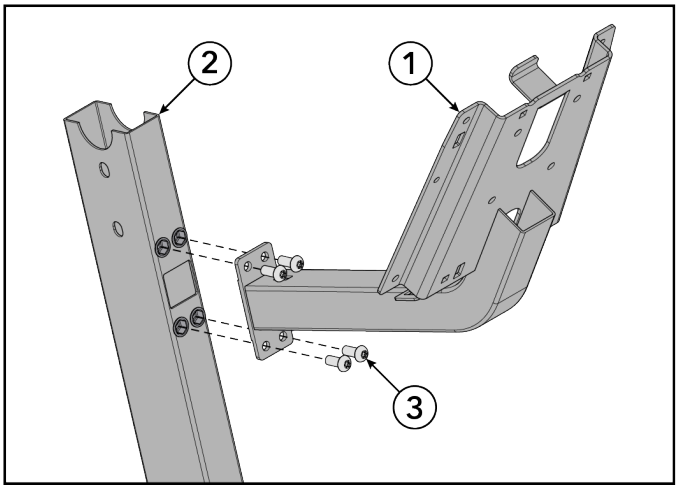

Item	Description	Qty.
1	Console Weldment	1
2	Monocolumn	1
3	Screw, M8 x 1.25 6G6H x 20, BUT, TRX, CS, ST, ZB	4

Tighten hardware to 25 ft-lb / 34 Nm.

4. Press upper tray shroud into console weldment.

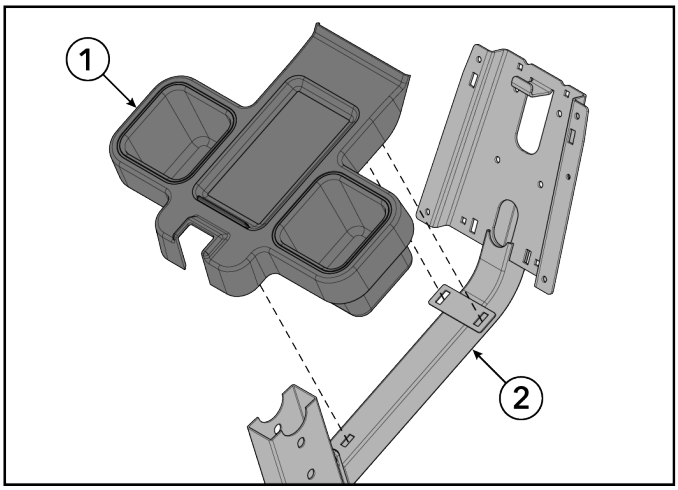

Item	Description	Qty.
1	Upper Tray Shroud	1
2	Console Weldment	1

5. Insert grommets into holes in bottom of console weldment.
6. Install screws securing lower tray shroud to console weldment using a Phillips screwdriver.

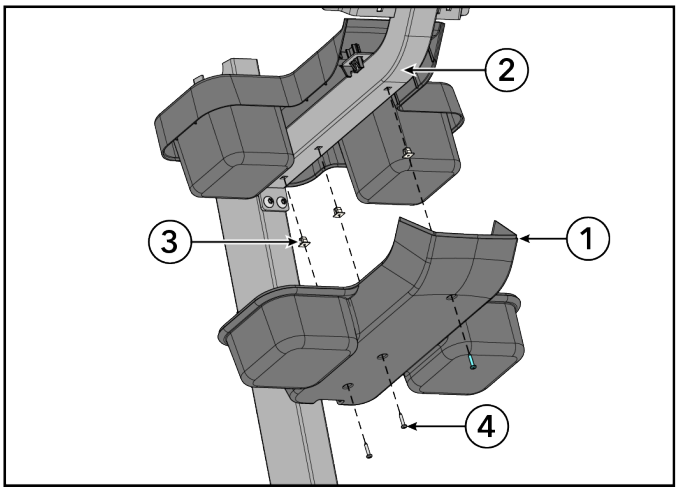

Item	Description	Qty.
1	Lower Tray Shroud	1
2	Console Weldment	1
3	Grommet	3
4	Screw, M4.2 x 0.7 6G6G x 19, DIN, PHL, PAN, AB, ST, ZB	3

Tighten hardware to 13 in-lb / 1.5 Nm.

7. Install screw securing ground cable to console weldment using an 8mm socket wrench.

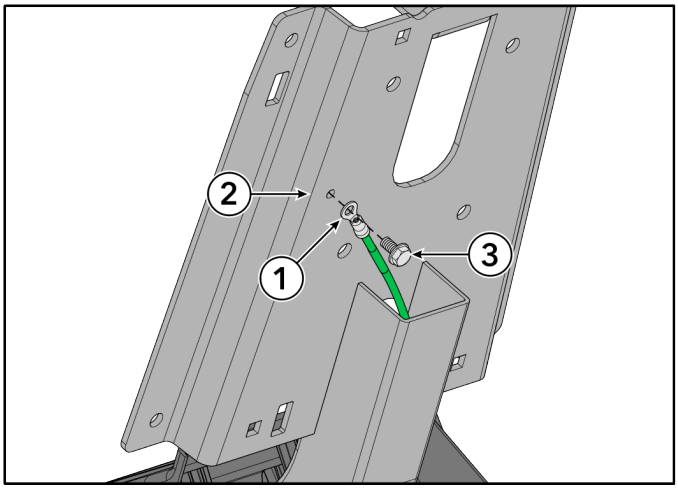

Item	Description	Qty.
1	Ground Cable	1
2	Console Weldment	1
3	Screw, #10 x 6 UNS, HXW, L, B, ST, GR	1

Tighten hardware to 2.6 ft-lb / 3.5 Nm.

Install Handlebar Assembly

Install screws and washers securing handlebar assembly to monocolumn using a T40 Torx wrench.

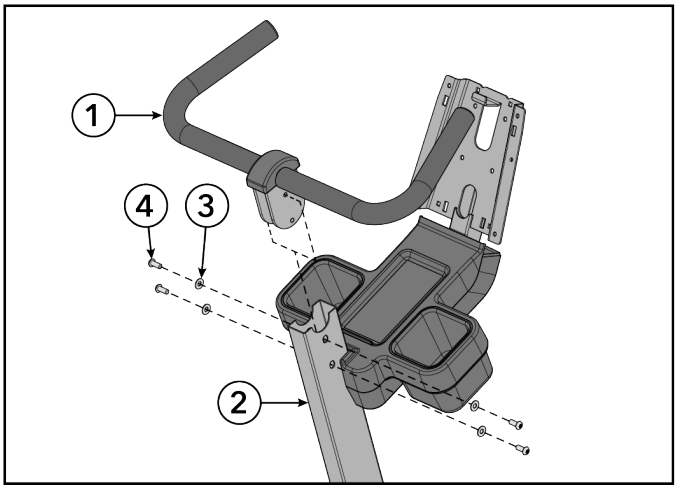

Item	Description	Qty.
1	Handlebar Assembly	1
2	Monocolumn	1
3	Washer, Seat Stop	4
4	Screw, M8 x 1.25 6G6H x 20, BUT, TRX, CS, ST, ZB	4

Tighten hardware to 25 ft-lb / 34 Nm.

Ferrite Installation

Assemble ferrite to base power and base signal cable at the bottom of the console weldment.

Ferrite

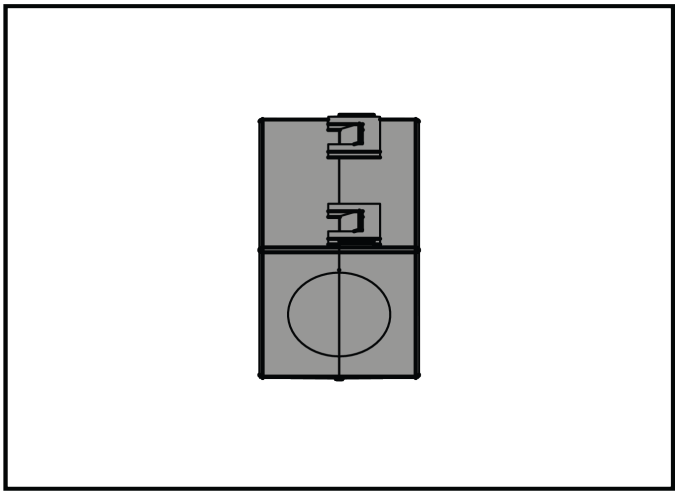

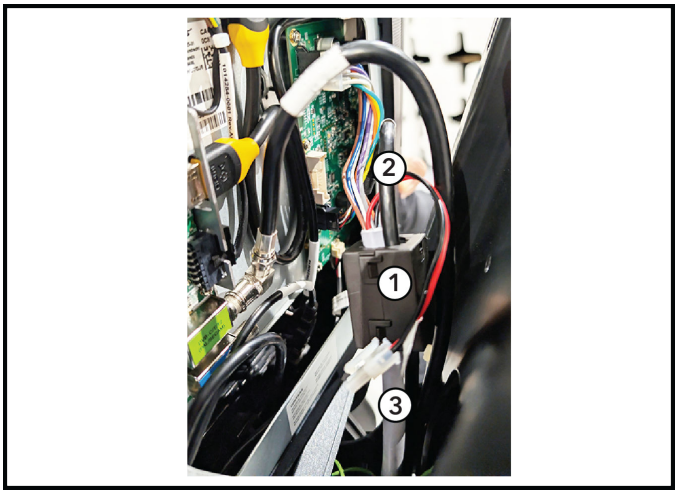

Item	Description	Qty.
1	Ferrite: Suppression, Core-Case	1
2	Cable, Console to Base, Signal	1
3	Cable, Console to Base, Power	1

Base to Console Connections

Connect base cables to console.

SL

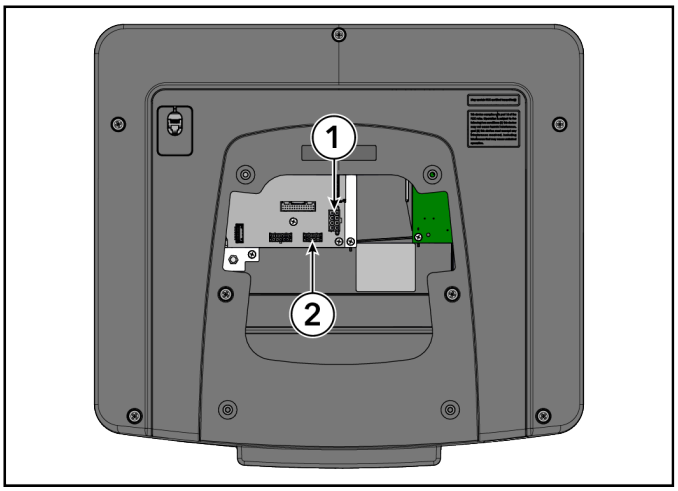

Item	Description
1	Base Power
2	Base Comm

SE4

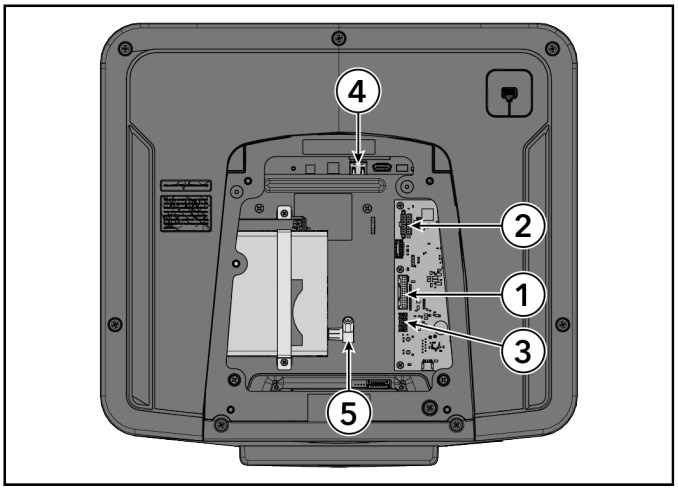

Item	Description
1	Base Interface Cable
2	Base Power
3	Base Comm
4	Ethernet
5	COAX

Install Console:SL or SE4

Install screws securing console to console support weldment using a Phillips screwdriver.

NOTE: Use the hook on top of the console support weldment to aid in console installation.

SL Console

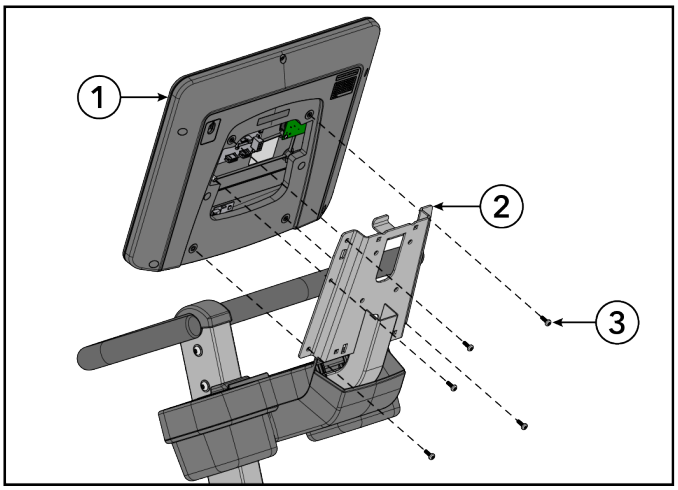

Item	Description	Qty.
1	Console	1
2	Console Support Weldment	1
3	Screw, M5 x 0.8 x 14, PHL, PAN, MS, ST, ZN	5

SE4 Console

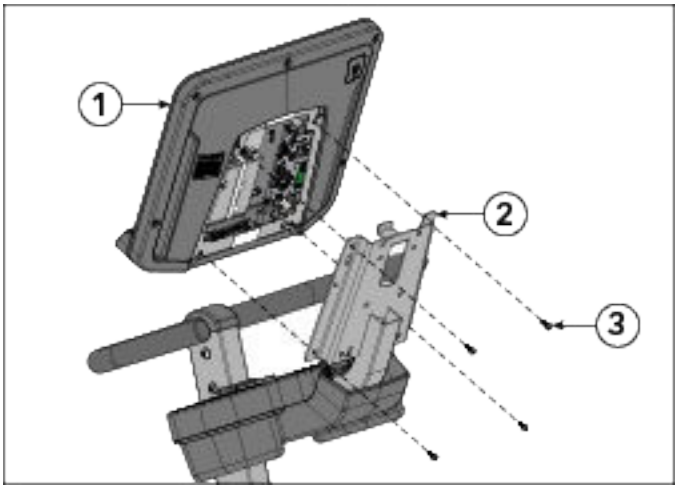

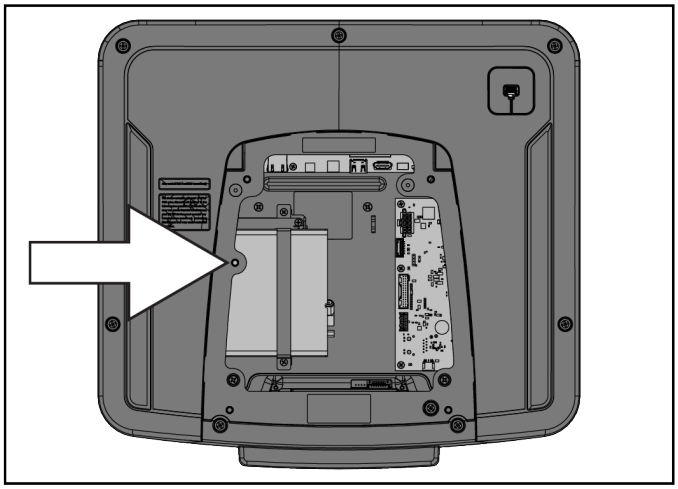

NOTE: Do not install the screw in the location shown (next to arrow) if the SE4 console has a Set Top Box Sync (STB) receiver! The screw will hit the STB receiver inside of the console.

Item	Description	Qty.
1	Console	1
2	Console Support Weldment	1
3	Screw, M5 x 0.8 x 14, PHL, PAN, MS, ST, ZN	4

Tighten hardware to 16.8 in-lb / 1.9 Nm.

Install Console Back Shroud

1. Insert grommets into two holes in back of console weldment.
2. Push clips on top of console back shroud into corresponding slots on console weldment.
3. Install screws securing console back shroud to console weldment using a Phillips screwdriver.

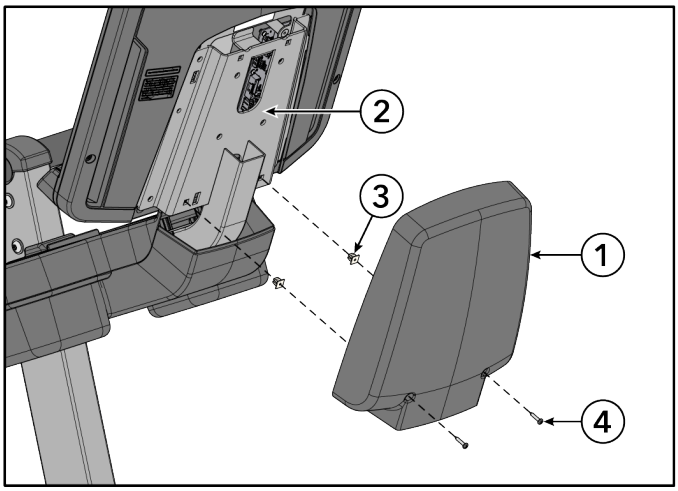

Item	Description	Qty.
1	Console Back Shroud	1
2	Console Weldment	1
3	Grommet	2
4	Screw, M4.2 x 0.7 6G6G x 19, DIN, PHL, PAN, AB, ST, ZB	2

Tighten hardware to 13 in-lb / 1.5 Nm.

Install Pedals

Install pedals to crank arms using a 15mm pedal wrench.

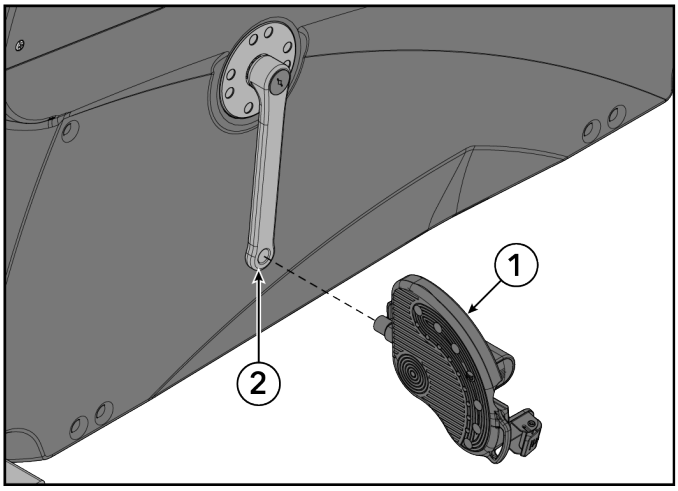

Item	Description	Qty.
1	Pedal	2
2	Crank Arm	2

Tighten hardware to 41 ft-lb / 55 Nm.

Test Unit For Proper Operation

5. Specifications

Product Specifications

Designed Use	Heavy / Commercial EN ISO 20957 Class S
	Home Edition EN ISO 20957 Class H
Maximum User Weight	400 lbs. / 181 kg
Pedal Size	6.56 in. x 5.5 in. / 16.6 cm x 14 cm
Resistance Levels	26
Drive Type	Generator/Belt
Power Requirements	See Electrical Power Requirements Section
Wireless Charging **(SE4 Console Only)**	Qi wireless induction charging • Charging area: 50mm x 80mm (approximately 2 in. x 3 in.) • Charging response time: less than 3 seconds • Maximum output: 10W • Charging protocol compatibility: Qi Fast Charging
Wireless Communication	BT, NFC, Apple & Samsung watch compatibility, ANT+, RFID, Wireless Connectivity **NOTE:** Some Home Edition models may not have RFID communication.

	Physical Dimensions (without console)
Length	45 in. / 114.3 cm
Width	27.2 in. / 69 cm
Height	56 in. / 142.2 cm
Weight	142 lbs. / 64.4 kg

6. Service and Technical Data

Preventive Maintenance Schedule

Item	Weekly	Monthly	Biannually
Console Overlays	Clean		Inspect
Cup Holders / Accessory Trays	Clean	Inspect	
Console Mounting Bolts			Inspect
Hardware			Inspect
Frame / Seat Post	Clean		Inspect
Plastic Covers	Clean	Inspect	
Leg Levelers		Inspect / Adjust	
Pedals / Straps	Clean	Inspect	

Preventive Maintenance Tips

NOTE: Safety of the equipment can be maintained only if the equipment is examined regularly for damage or wear. Keep the equipment out of use until defective parts are repaired or replaced. Pay special attention to parts that are subject to wear, as outlined below.

REMARQUE : Pour assurer la sécurité du matériel, il convient de l'inspecter régulièrement afin de déceler tout signe d'usure ou d'endommagement. N'utilisez pas l'appareil avant d'avoir réparé ou remplacé les pièces défectueuses. Portez une attention toute particulière aux pièces qui s'usent, comme indiqué ci-dessous.

The following preventive maintenance tips will keep the product operating at peak performance:

- Locate the product in a cool, dry place.
- Clean the display console and all exterior surfaces with an approved or compatible cleaner (see Approved and Compatible Cleaners) and a microfiber cloth.
- Long fingernails may damage or scratch the surface of the console; use the pad of the finger to press the selection buttons on the console.
- Clean the top surface of the pedals regularly.

NOTE: When cleaning the exterior of the unit, a non-abrasive cleaner and soft cotton cloth are strongly recommended. At no time should cleaner be applied directly to any part of the equipment.

Approved and Compatible Cleaners

Two preferred cleaners have been approved by reliability experts: PureGreen 24 and Gym Wipes. Both cleaners will safely and effectively remove dirt, grime and sweat from equipment. PureGreen 24 and the Antibacterial Force formula of Gym Wipes are both disinfectants that are effective against MRSA and H1N1.

PureGreen 24 is available in a spray which is convenient for gym staff to use. Apply the spray to a microfiber cloth and wipe down the equipment. Use PureGreen 24 on the equipment for at least 2 minutes for general disinfection purposes and at least 10 minutes for fungus and viral control.

Gym Wipes are large, durable pre-moistened wipes to use on the equipment before and after workouts. Use Gym Wipes on the equipment for at least 2 minutes for general disinfection purposes.

Contact Customer Support Services to order these cleaners (1-800-351-3737 or email: customersupport@lifefitness.com).

Mild soap and water or a mild non-abrasive household cleaner can also be used to clean the display and all exterior surfaces. Use a soft microfiber cloth only. Apply the cleaner to the microfiber cloth before cleaning. DO NOT use ammonia or acid based cleaners. DO NOT use abrasive cleaners. DO NOT use paper towels. DO NOT apply cleaners directly to the equipment surfaces.

Troubleshooting the Polar® Heart Rate Chest Strap

Heart rate reading is erratic or absent entirely

Probable Cause	Corrective Action
Belt transmitter electrodes are not wet enough to pick up accurate heart rate readings.	Wet the belt transmitter electrodes.
Belt transmitter electrodes are not laying flat against the skin.	Ensure the belt transmitter electrodes are laying flat against the skin.
Belt transmitter needs cleaning.	Wash the belt transmitter with mild soap and water.
Belt transmitter not properly set up.	Setup of the belt transmitter is accomplished by initially bringing it with in 1 foot / 30.5 cm of the receiver. The receiver is in the console. After the heart rate is displayed on the console the range is extended to 3 feet / 91.4 cm.
Chest strap battery is depleted.	Contact Customer Support Services for instructions on how to have the chest strap replaced.

Abnormally elevated heart rate readings

Probable Cause	Corrective Action
Electromagnetic interference from: • Television sets and / or antennas • Cell phones • Computers • Cars • High voltage power lines • Motor driven exercise equipment	Move the exercise equipment a few inches away from the probable cause, or move the probable cause a few inches away from the exercise equipment, until the heart rate readings are accurate.

Recycle the Battery

Remove and recycle the rechargeable battery before discarding this product at the end of its useful life. Disconnect the power supply *(if applicable)* before removing the battery. To access the battery remove user right crank, monocolumn shrouds, and user right main shroud. To remove the battery, disconnect the cable and remove the two screws holding the battery.

How To's

Knowledge Base

See https://lfn.fit/KnowledgeBase for more detailed information.

How to Obtain Product Service

1. Verify the symptom and review the operating instructions. The problem may be unfamiliarity with the product and its features and workouts.
2. Locate and write down the serial number of the unit which is located on the top right of the front stabilizer.
3. Contact Customer Support Services at http://www.lifefitness.com.

Software Updates

The Equipment contains embedded software essential to its proper operation and safety. To maintain functionality, security, and warranty coverage, the Equipment software must be kept current with all manufacturer-issued updates, patches, and upgrades ("Updates").

1. Notification and Monitoring – Owner / Operator shall (a) register and maintain a valid email address with Manufacturer for the purpose of receiving Update notifications, or (b) regularly monitor Manufacturer's designated website for posted Update notices. Failure to do either shall not relieve Owner / Operator of the obligation to install Updates.

2. Update Method – Updates will be made available through the Manufacturer's secure electronic distribution channel. Owner / Operator shall follow the instructions provided for proper installation and implementation.
3. Responsibility for Compliance – The duty to remain informed of Updates rests solely with the Owner / Operator. Manufacturer's obligation to provide notification is satisfied by sending notice to the registered email address or by posting notice on its designated Update website.
4. Consequences of Non-Compliance – Failure to install Updates may result in:
    - Voided or limited warranty coverage;
    - Suspension of technical support;
    - Diminished equipment performance or safety hazards; and
    - Manufacturer disclaiming liability for resulting injury, damage, or loss.

7. Warranty

Warranty Information

Please use the link below or scan QR code to access warranty information:

http://lifefitness.com/warranties

8. Release Notes

Updates to Manual

July 7, 2026 (Rev AC)

Topic	Changes
Cover Page	Added: Atmos Home Edition
Additional Information	Updated QR Code
Electrical Requirements	• SL / SE4 combined into one row • Supply Voltage: 100-240 VAC • Frequency: 50-60 Hz • Outlet Voltage: no difference in units per breaker between SL and SE4 • Outlet Voltage: 120 VAC Home units changed from 8 to 6 per breaker
Assembly	• Deleted Link to Additional Information Online • Added: Unpackaging and Disposal of Packaging topic
Specifications	Wireless Communication: Added Note: Some Home Edition models may not have RFID Communication

February 1, 2026 (Rev AB)

Topic	Changes
Link to Additional Information Online	Added
Cover Page	Added: Owner's Manual
Safety Instructions	Added: Owner of the equipment is responsible for providing the users of the equipment with all warnings and instructions.
	Updated verbiage: Free standing equipment shall be positioned on a flat, stable and horizontal base.
Product Overview	Added: Product Labels
Hardware	Added: Ferrite
Ferrite Installation	New assembly step
Attach Console	Updated image and topic for SE4 console to 4 screws.
Install Seat Assembly	Updated verbiage and image in step 2.
Install SE4 Cables	Updated verbiage on the TIP for pull wire cable.
Service and Technical Data	Added: Software Update topic
Specifications	Added: 26 resistance levels

1028291-0001