TECHNI VORM

MOCCAMASTER

Welcome, and thank you for your purchase!



Gerard Clement Smit
Founder and Designer

When Technivorm founder Gerard Clement Smit debuted his coffee grinder in 1965, it was revolutionary – the first coffee grinder designed for home use.

The Moccamaster KM5 Burr Coffee Grinder continues this legacy of industry-leading quality. Its precision engineering allows you to grind your preferred coffee beans to an exact, uniform size. And when combined with Moccamaster coffee brewers' optimal temperature and brewing time, these perfectly crafted grinds burst with flavor and freshness, for the real taste of coffee.

Now you can taste the entire journey of your coffee — from origin to roaster to extraction — by starting with the perfect grind.

The Moccamaster Difference

Recyclable, Repairable, Cleanable, Sustainable

Industry-Leading 5-Year Warranty

Handmade in the Netherlands Since 1964

APPROVED
European Coffee Brewing Centre

Industry-Certified for Optimal Performance

The KM5 Moccamaster coffee grinder is certified to grind to the strict standards of the European Coffee Brewing Center (ECBC); a certification awarded only after rigorous quality control and laboratory testing.

moccamaster.com

Warranty

5-Year Limited Warranty

This Moccamaster Grinder, excluding removable parts, is warrantied by Moccamaster USA to be free from defects in materials and workmanship existing at the time of manufacture and appearing within one of the following warranty periods:

Five (5) years from the date of purchase of a **NEW GRINDER.**
One (1) year from the date of purchase of a **REFURBISHED GRINDER.**

If Moccamaster USA inspects the grinder and finds it to be defective, it will be repaired or replaced without charge to you. If a replacement product is provided, it will assume the remaining warranty of the original product, as described above.

This warranty does not apply to any defect arising from a buyer or user's misuse of the product, including negligent handling, failure to follow manufacturer's instructions, modification, alteration, or repair not authorized by Moccamaster USA. If you choose to have someone other than an authorized service center service your grinder, **THIS WARRANTY WILL AUTOMATICALLY BECOME NULL AND VOID.** Any liability is expressly limited to an amount equal to the purchase price paid, and all claims for special, incidental, or consequential damages are hereby excluded.

Unless otherwise specified, Moccamaster USA makes no other warranty of any kind, expressed or implied, as to the merchantability or fitness of any product for any particular purpose. Moccamaster USA expressly disclaims all warranties and conditions not stated in the limited warranty. Moccamaster USA is not liable for any claim made by a third party or made by a buyer or user for a third party.

This warranty gives you specific legal rights, and you may also have other legal rights, which vary from state to state. Some states do not allow the limitation or exclusion of incidental or consequential damages, so the above limitation or exclusion may not apply to you.

If you believe your grinder is defective, return it to the location of purchase (within first 30 days) or contact Moccamaster USA Consumer Relations at support@moccamaster.com, or 855.662.2200.

KEEP ORIGINAL SALES RECEIPT OR INVOICE AS PROOF OF PURCHASE FOR WARRANTY PURPOSES.

For out-of-warranty product repair services visit moccamaster.com

The Science of the Perfect Cup

Did you know that a “perfect cup of coffee” is a quantifiable metric? When awarding their Seal of Approval, the European Coffee Brewing Centre (ECBC) uses science-backed guidelines to evaluate how coffee grinders and brewers perform:

COFFEE GRINDING



GRINDING TEMPERATURE
Coffee is not heated during grinding

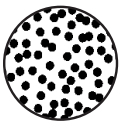

GRIND QUALITY
Each ground particulate is consistent in size

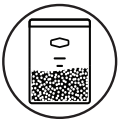

GRIND UNIFORMITY
The grinder reproduces the exact same results grind after grind



FORMULA
Coffee to water ratio: 2 TBSP to 6 oz.

COFFEE BREWING



BREWING TEMPERATURE
Brews at 196°F - 205°F



BREWING TIME
Full carafe in 4-6 minutes

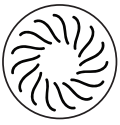

TURBULENCE OF THE GROUNDS
Perfect coffee bloom and even extraction



TOTAL DISSOLVED SOLIDS
Coffee solubles between 18%-22%

Moccamaster grinders and brewers hit these benchmarks every time, consistently producing delicious coffee over a lifetime of use.

To learn more about ECBC certification, visit ecbc.no.



Do Not Return to Store!

FOR IMMEDIATE ASSISTANCE WITH
ASSEMBLY, USE, OR TROUBLESHOOTING
PLEASE CONTACT US!

WARRANTY REGISTRATION

To register your grinder, please visit the following URL:
MOCCAMASTER.COM/PAGES/REGISTER



To register your product and request repairs, please have your Art.no. and Serial Number (S/N) ready for Consumer Relations. This information is found on the base plate of the grinder and will look like the sample image to the left.

HOW TO CONTACT US

Email
support@moccamaster.com

Phone
855.662.2200

Find Help Online
support.moccamaster.com

Business Hours
Monday - Friday, 8AM-5PM CST

We look forward to hearing from you!

IMPORTANT SAFEGUARDS

When using electrical appliances, basic safety precautions should always be followed including the following:

READ ALL INSTRUCTIONS

- The appliance is intended for indoor use in households and similar applications such as:
    - staff kitchen areas in shops, offices, and other working environments
    - farmhouses
    - clients in hotels, motels, and other residential-type environments
    - bed & breakfast-type environments
- Unwrap the coffee grinder with care. Remove all packaging materials. Keep plastic and cardboard packaging out of reach of children.
- Confirm the voltage of the grinder matches your main voltage. The grinder must be plugged into a socket with safety grounding.
- Place the grinder on a flat surface in a frost-free room.
- To protect against risk of electrical shock do not put cord, plugs or coffee grinder in water or other liquid.
- This appliance can be used by persons with reduced physical, sensory or mental capabilities or lack of experience and knowledge if they have been given supervision or instruction concerning use of the appliance in a safe way and understand the hazards involved.
- Close supervision is necessary when any appliance is used by or near children. Children should be supervised to ensure they do not play with the appliance.
- Turn the appliance OFF, then unplug from the outlet when not in use, before assembling or disassembling parts and before cleaning. To unplug, grasp the plug and pull from the outlet. Never pull from the power cord.
- Do not operate any appliance with a damaged cord or plug or after the appliance malfunctions, or is dropped or damaged in any manner. Contact the manufacturer at their customer service telephone number for information on examination, repair or adjustment.
- Avoid contacting moving parts.
- Do not use outdoors.
- Do not let cord hang over edge of table or counter.
- Do not place on or near a hot gas or electric burner or in a heated oven.
- The use of attachments not recommended or sold by the manufacturer may cause fire, electric shock or injury.
- To disconnect, ensure power

IMPORTANT SAFEGUARDS

- switch is in “OFF” position, then remove plug from wall outlet.
- Do not use grinder for any purpose other than its intended use.
- Always place all lids in the correct position, as shown in the descriptive images in this manual.
- **NOT DISHWASHER SAFE.**

ENVIRONMENTAL RECOMMENDATIONS

Dispose of filters and coffee grounds in an organic waste container or compost heap where available. If not available, filters and grounds may be disposed of in normal household waste. Please recycle all packaging and parts responsibly.

MAXIMUM OPERATION TIME

For proper use, operate this appliance for no more than 1 minute at a time. Allow 15 minutes of rest after use, letting the grinder cool down to room temperature after each batch.

GLASS GROUNDS CONTAINER CAPACITY

To ensure correct operation, avoid filling the glass grounds container past the bottom of the Moccamaster logo as indicated below. Overfilling the glass grounds container can clog the dispensing spout and cause the motor to jam.

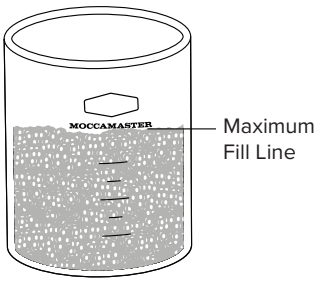

SAVE THESE INSTRUCTIONS

Product Overview

The KM5 Moccamaster Grinder

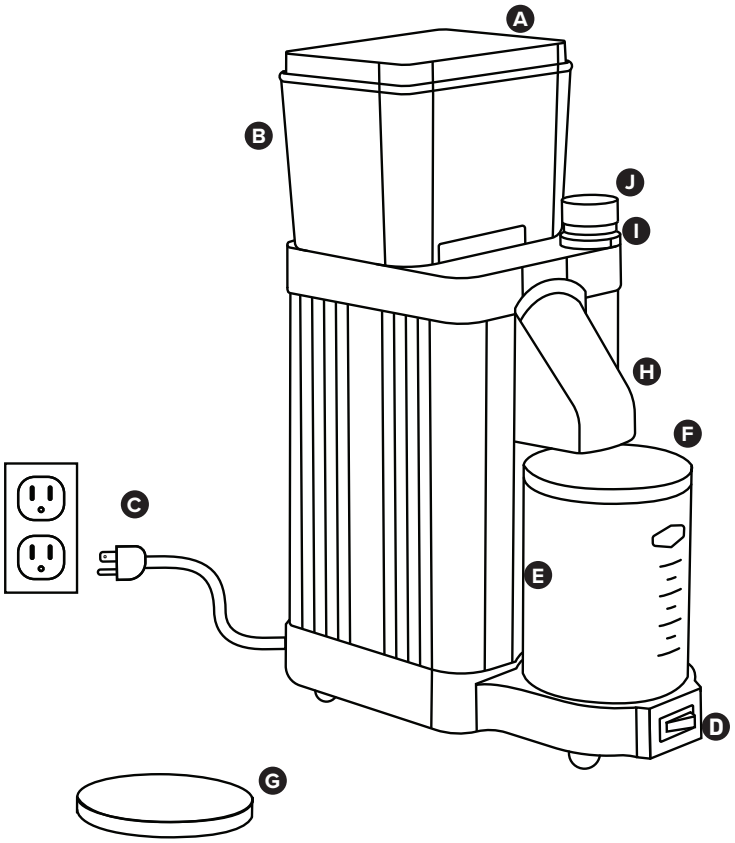

Parts Identification	
A. Bean Hopper Lid	**F.** Glass Grounds Container Lid
B. Bean Hopper	**G.** Glass Grounds Container Storage Lid
C. Power Plug	**H.** Dispensing Spout
D. Power Switch	**I.** Grind Setting Indicator
E. Glass Grounds Container	**J.** Grind Setting Adjustment Knob

Cleaning Your Grinder

Basic Cleaning

Unplug the grinder before cleaning. Wipe the inside surfaces of the bean hopper with a moist cloth at least once a week to avoid a build-up of the coffee oils, which can cause discoloration. You may also clean the exterior surfaces with a moist cloth as needed, and wipe dry. Do not use any cleaning agents to clean the interior or exterior of the coffee grinder. Do not wash any grinder parts in the dishwasher. Do NOT use rice to clean your grinder.

Maintenance Cleaning

We recommend cleaning the inside of your grinder every 3-6 months, depending on the type of coffee you're using and how frequently you grind. Darker roasts are typically oilier and tend to stick to the inside of the grinder more easily. If you do not clean your grinder regularly, you may find that it negatively impacts the flavor of your ground coffee.

The inside of your grinder can either be cleaned manually or automatically by using a dedicated coffee grinder cleaning product.

Manual Cleaning

Refer to our Burr Replacement instructions on our website to learn how to disassemble your grinder.

For best results, use a soft brush and a vacuum cleaner to clean the grinding chamber.

Automatic Cleaning

A grinder cleaning product will remove coffee oils and particles stuck inside the grinder without disassembly. Be sure to choose one that is suitable for burr grinders, such as Biocaf Coffee Grinder Cleaning Tablets by Urnex, and follow the manufacturer's directions on the packaging.

FIND MORE ONLINE

To learn more about your grinder, including how to replace your burrs and dial in your grind setting, scan the QR code to the right or visit us at **www.moccamaster.com**.

Best Practices
for Best Results



Use Fresh Beans

The fresher the grind, the better. We recommend grinding your coffee beans right before you brew, and grinding just the amount you need. If you do grind more, you can store the grounds in your grinder's glass grounds container with storage lid.



Dial In Your Grind

Coffee grounds that are too fine can produce an over-extracted cup of coffee. Too coarse, and your coffee may be weak or flavorless. We recommend medium-coarse when brewing on a Moccamaster. Use our chart below to find your brewing method, and experiment with small adjustments to find the grind that's perfect for your palate.



Keep It Clean

If you don't use your grinder daily, you may want to clear out old grounds before grinding a fresh batch. Pre-grind a small amount of coffee first and discard.



Consider Your Water

If it tastes good to drink, it will make good coffee. We recommend fresh tap, filtered, or bottled water. We do not recommend using reverse osmosis filtered water or distilled water, as it can damage the brewer’s boiling element and lacks minerals necessary for making great coffee.



Find Your Flavor

The coffee-to-water ratio we recommend is the approved industry standard, but your taste preferences may vary. If your coffee is too strong, add hot water to your finished cup. If it’s too weak, **DO NOT** add more coffee – instead, try a different coffee roast or growing region.

REPLACEMENT PARTS

Replacement parts are available through many retailers, online at **www.moccamaster.com**, or through Consumer Relations at **855.662.2200**.

Adjusting Your Grind Settings

Grind Setting Details

The adjustment knob on the KM5 Coffee Grinder allows you to produce coffee grounds that range from fine **(1)** to coarse **(9)**. When grinding for a Moccamaster coffee brewer, we recommend starting at the ECBC-approved setting of **5**. We suggest not grinding below 4 for your Moccamaster as a finer grind size may negatively affect the flavor of your brew and the performance of your machine.

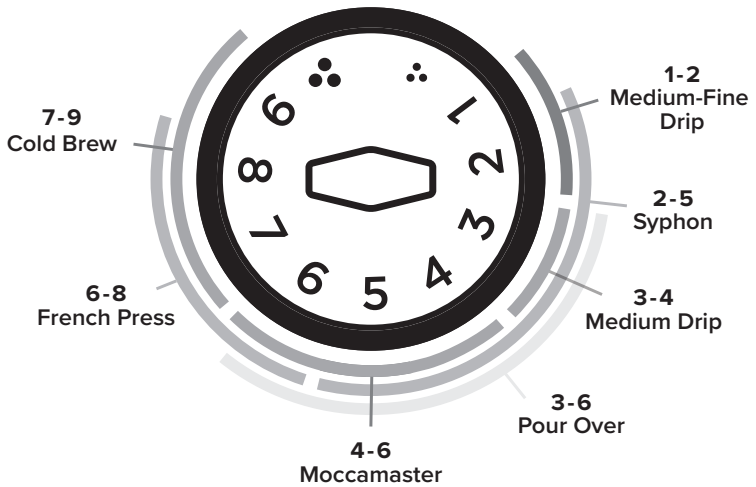

The Importance of Grind Size

Your grind size and your water-to-coffee ratio are the first steps to perfect coffee. They affect your final extraction – the amount of flavor-filled coffee solubles in your cup. To find your ideal grind, make minor adjustments to the grind setting and taste how it changes the flavor of your coffee. Your grind size will affect your final extraction - the amount of coffee solubles in your cup. Learn more about how to dial in your perfect grind online at **www.moccamaster.com**.

Recommended Coffee-to-Water Ratio

The industry standard for optimal flavor is 2 tbsp. of ground coffee to every 6 oz. of water – or 55 grams of ground coffee per liter.



Adjusting Your Grind Settings

Getting Started

For first use, set the adjustment knob to 5. On subsequent use, always activate the power switch before adjusting the grind setting. This allows the burrs to clear any partially ground beans that may be present from previous use. If bean remnants are trapped in the burrs, adjusting the grind setting without activating the grinder may cause the motor to jam.

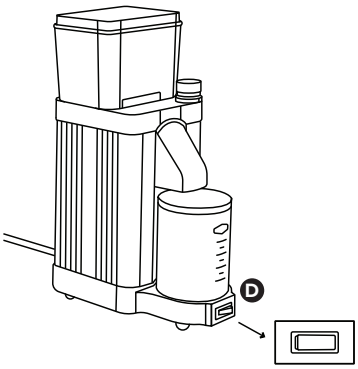

Power On

Activate the grinder by holding the **Power Switch (D)**.

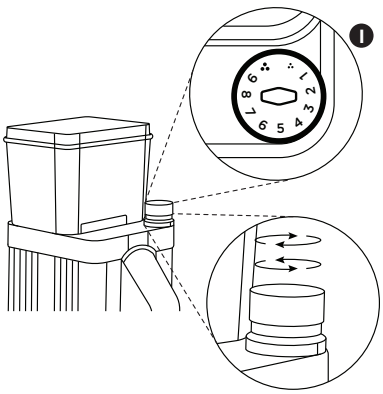

Adjust the Grind

With the grinder running,rotate the **Adjustment Knob (J)** clockwise or counterclockwise to adjust the grind setting.

- Clockwise produces a finer grind.
- Counterclockwise produces a coarser grind.

- For more information about grinder use and functionality, see the *Important Safeguards* section in this manual.

How to Grind

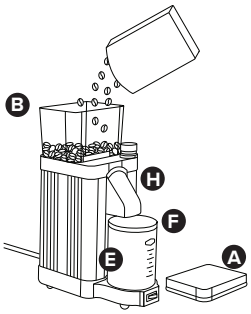

Step 1.

Place **Glass Grounds Container Lid (F)** in position.

Place **Glass Grounds Container (E)** underneath the **Dispensing Spout (H).**

Fill **Hopper (B)** with coffee beans.

Place **Hopper Lid (A)** on top of the hopper.

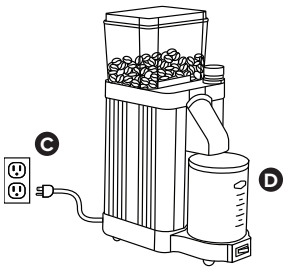

Step 2.

Insert **Power Plug (C)** into a grounded outlet.

Press and hold the **Power Switch (D)** until you have ground the desired amount of coffee.

Note: Do not fill the glass grounds container past the bottom of the Moccamaster logo (approx. 110 grams). Allowing the container to overflow may result in the grinder motor jamming.

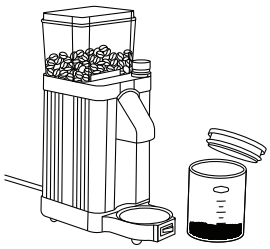

Step 3.

Remove the Glass Grounds Container from underneath the Dispensing Spout and take off the Lid.

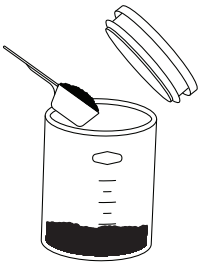

Step 4.

Measure or weigh your grounds and transfer to your prepared brew basket or coffee brewer. If you have leftover grounds, seal the grounds container with **Storage Lid (G)**.

You're ready to brew great coffee!

