Parts:

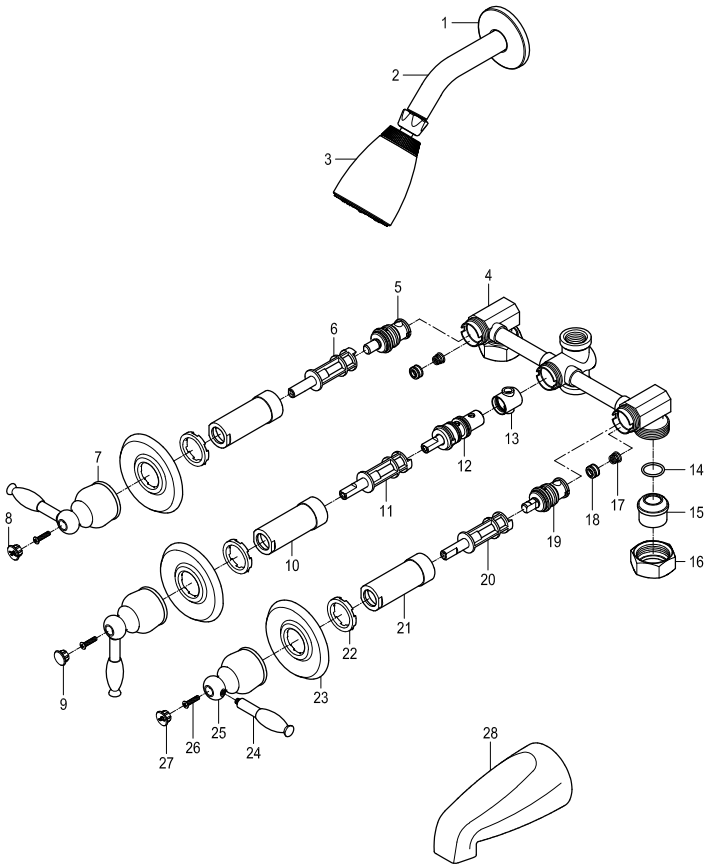

Replacement Parts:

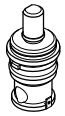

Hot Cartridge: KBRP131HC



Cold Cartridge: KBRP131CC



Diverter Cartridge: KBRP131CD

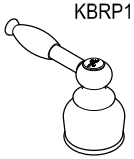

Hot Handle: KBH2601KLH

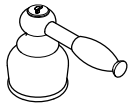

Cold Handle: KBH2601KLC

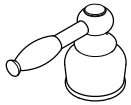

Diverter Handle: KBDH2601KL

CARE AND MAINTENANCE OF YOUR FAUCET

Your Kingston Brass faucet has been finished to the most strict standards; however, due to the high content of minerals in the water, your finish may appear dull and tarnished after time. These are some do's and don'ts to maintain the luster on your faucet for many years to come.

DO
1. Use a silicon based caulking when installing.
2. Clean your faucet with only a mild soap and water solution.
3. Dry your faucet after using it.
4. Give it a coat of Carnauba Wax periodically.

DON'T
1. Use plumbers putty when installing the faucet.
2. Use any abrasive cleaning agents.

It may seem like a very simple and short list but it is that simple to maintain your faucet, looking shiny and new.

If your faucet is already looking somewhat dull and tarnished, before replacing it, try cleaning it with a 50/50 solution of vinegar and water, you may need to soak some rags and wrap around those stubborn areas, leave overnight and rinse completely in the morning, apply Carnauba wax once you have removed the mineral deposits.

KINGSTON

KITCHEN & BATH

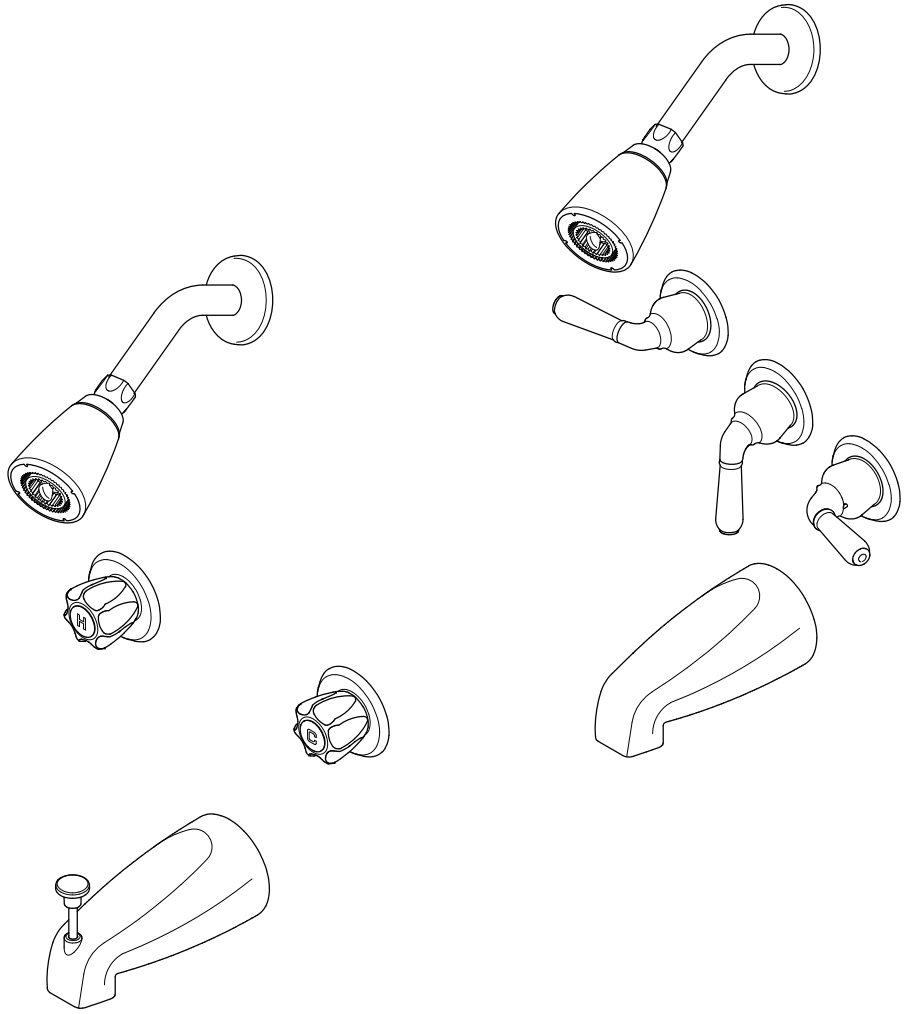

www.kingstonbrass.com
TOLL-FREE CUSTOMER SERVICE: 1-877-2-KBRASS
TECHNICAL SUPPORT E-mail: service@kingstonbrass.com
12775 Reservoir Street, Chino, CA 91710

NOTICE

Failure to follow all directions may cause leaks which may result in water damage

⚠CAUTION

Failure to follow all installation directions may cause product to detach from the wall and cause serious injury

KINGSTON
KITCHEN & BATH

INSTALLATION INSTRUCTIONS
Tub & Shower Faucet

Need Tools:

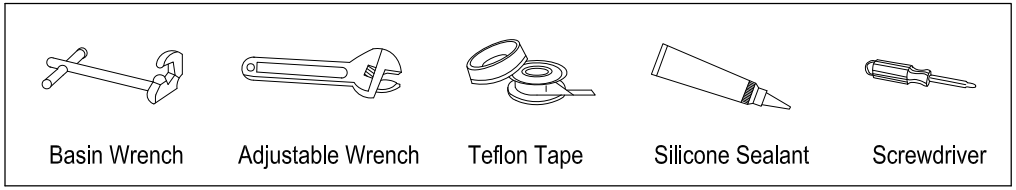

BEFORE BEGINNING INSTALLATION:

1. Flush plumbing lines to clear any debris.
2. Shut off both supply lines after flushing.

1 2

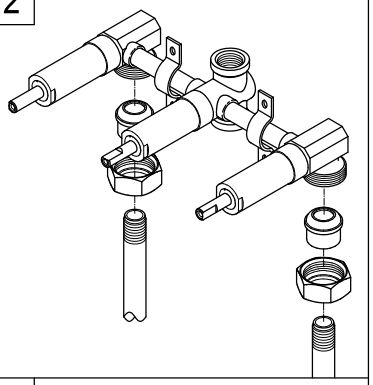

1. Properly secure valve body to wood bracing using copper straps. (not included)
   Turn off water supply.
2. Connect valve assembly to 1/2" supply lines. Tailpieces on valve assembly are threaded for 1/2" threaded pipe and will accept 1/2" sweat copper.

3 4

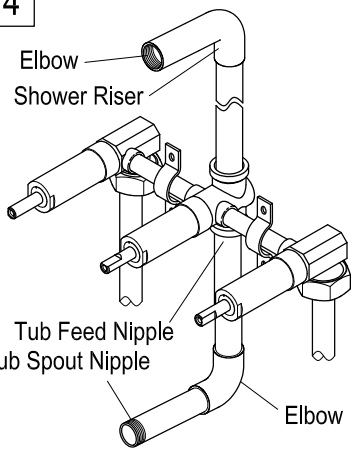

3. Assemble 1/2" elbow and 1/2" feed nipple. Screw into bottom of valve. Screw 1/2" tub spout nipple into elbow. Nipple should extend out from wall about 4-1/4. " (If no shower is to be installed, use a 1/2" plug to close top opening of valve.)
4. Assemble 1/2" shower riser pipe and 1/2" elbow. Screw into top of valve. (if no spout is to be installed, use a 1/2" plug to close bottom opening of valve.)

5

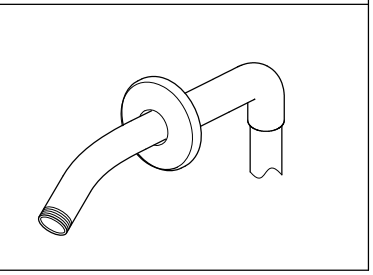

5. Place the shower flange over shower arm. Apply pipe compound to the threads on the long end of the shower arm. Screw that end into the shower riser elbow. Push flange against the wall.

6

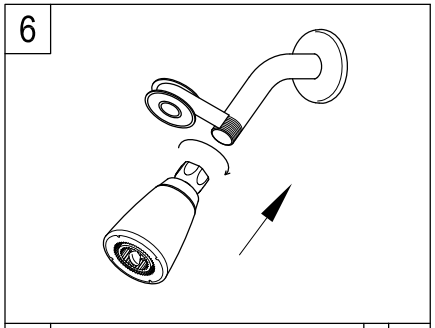

6. Wrap Teflon tape around all the threads on shower arm and hand tighten the shower head clockwise.
   Turn the water on and check for leaks, any leaks will require minor tightening or adjustment.
   If the shower head leaks at the connection to the thread shower arm, tighten the connection some more by using a wrench.

7

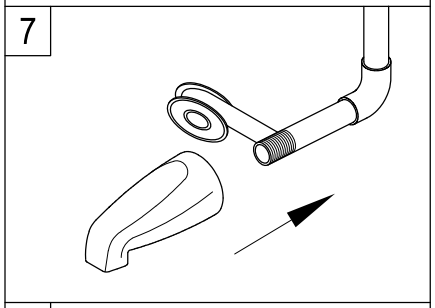

7. Apply pipe compound to tub spout nipple and attach spout to nipple. Hand tighten. Apply Teflon tape to inlet shanks and connect supply lines.

8

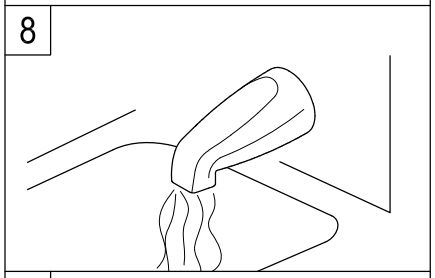

8. Turn on water supply and check connections for leaks.
   Place handle on valve stem and flush lines by running hot and cold water uninterrupted for one minute.

9

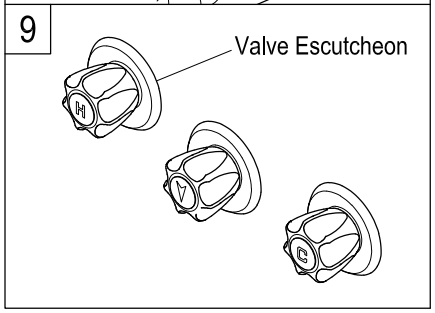

9. Remove handle.
   Push valve escutcheon over protruding valve assembly and secure with screws.
   Then replace handle.

© 2023-05-T Kingston Brass