# pixium EZ3 NDT
## Integration Manual and General Cautions


***TRIXELL PROPRIETARY INFORMATION***

*Copyright © by 2025 TRIXELL. All rights reserved. This document and the information contained therein are TRIXELL's exclusive property.*
*Any copy and/or disclosure thereof in any form whatsoever are subject to TRIXELL's prior written consent.*

# DOCUMENT HISTORY

| Version | DOORS Baseline | Date | Author | Description | DM |
|---|---|---|---|---|---|
| - draft 1 | NA | January 23th, 2025 | O. Chastel | Initial version | 330761 |
| - draft 2 | NA | May 2nd, 2025 | O. Chastel | Update according to IEC 62368-1<br>Add Japan RF certificate | 330761 |
| - draft 3 | NA | September 10th, 2025 | O. Chastel | Update mandatory text for FCC / IC declarations<br>Update main label | 330761 |

***TRIXELL PROPRIETARY INFORMATION***
*Copyright © by 2025 TRIXELL. All rights reserved. This document and the information contained therein are TRIXELL's exclusive property.*
*Any copy and/or disclosure thereof in any form whatsoever are subject to TRIXELL's prior written consent.*

# CONTENTS

Document History ..... 2
Contents ..... 3
List of Tables ..... 5
List of Figures ..... 6
1. PRESENTATION ..... 7
1.1. INTRODUCTION ..... 7
1.2. GENERAL DESCRIPTION ..... 7
1.3. DETECTOR ..... 7
1.4. DELIVERY ..... 8
1.5. IDENTIFICATION ..... 8
1.6. STANDARDS ..... 8
1.7. REFERENCE DOCUMENTS ..... 9
1.8. DEFINITION, ACRONYMS, ABREVIATION ..... 9
2. INSTALLATION ..... 11
2.1. INSTALLATION REQUIREMENTS ..... 11
2.2. INSTALLATION PROCEDURE ..... 11
2.2.1. Mechanical installation ..... 11
2.2.2. Connectics ..... 12
2.2.2.1. Connector unit ..... 12
2.2.2.2. Accessory connector ..... 13
2.2.2.3. Cable EZ3: Power supply ..... 14
2.2.2.4. Cable EZ3: TDLP link ..... 15
2.2.2.5. Cable EZ3: Detector connector ..... 16
2.2.3. X-ray generator connection ..... 17
2.2.4. Cooling ..... 17
2.2.5. Maximum allowed weight on the detector ..... 17
2.2.6. Detector settings ..... 17
2.2.6.1. Communication link settings ..... 18
2.2.6.2. Other settings ..... 18
2.2.7. Additonal accessories ..... 18
3. FIRST OPERATION ..... 19
3.1. SWITCH ON ..... 19
3.2. SWITCH OFF ..... 19
3.3. SOFTWARE FEATURES ..... 19
3.4. OPERATION MODES ..... 19
3.4.1. Table mode definition ..... 19
3.4.2. Spatial relationship ..... 20
4. CAUTIONS AND RECOMMENDATIONS ..... 21
4.1. SAFETY MEASURES FOR THE SYSTEM INTEGRATOR ..... 21
4.1.1. Operation cautions ..... 21
4.2. CYBERSECURITY ..... 21
4.3. TEMPERATURE ..... 22
4.4. EMC COMPLIANCE ..... 22
4.4.1. Cables and connectors ..... 22
4.5. WARM-UP TIME FROM A COLD START ..... 22

***TRIXELL PROPRIETARY INFORMATION***
*Copyright © by 2025 TRIXELL. All rights reserved. This document and the information contained therein are TRIXELL's exclusive property.*
*Any copy and/or disclosure thereof in any form whatsoever are subject to TRIXELL's prior written consent.*

4.6. HUMIDITY ..... 22
4.7. MAINTENANCE ..... 23
4.8. SOFTWARE USE INFORMATIONS ..... 23
5. TROUBLESHOOTING ..... 24
5.1. POWER SUPPLY RANGE ..... 24
5.2. OTHER FAILURE ..... 24
6. CLEANING AND DISINFECTIONS INSTRUCTIONS ..... 25
7. ECO-DESIGN ..... 27
7.1. RECYCLING/REFURBISHMENT ..... 27
7.1.1. Battery ..... 27
7.1.2. Front End, backup cable and battery charger ..... 27
7.2. REACH INFORMATION (for Europe only) ..... 27
8. MANUFACTURER ..... 28
9. APPENDIX A: PIXIUM DETECTOR IDENTIFICATION LABELS ..... 29
9.1. Labels ..... 29
9.1.1. Labels non CE marked by Trixell ..... **Erreur ! Signet non défini.**
10. APPENDIX B: PIXIUM DETECTOR SUMMARY SHEET ..... 30
10.1. IMAGE GEOMETRY ..... 30
10.2. ELECTRO-OPTICAL PERFORMANCES ..... 30
10.3. ELECTRICAL INTERFACE ..... 30
10.4. MECHANICAL INTERFACE ..... 31
10.5. ENVIRONMENTAL CONDITIONS ..... 31
10.5.1. TEMPERATURE ..... 31
10.5.2. AIR PRESSURE ..... 32
10.5.3. HUMIDITY ..... 32
10.5.4. VIBRATIONS AND SHOCKS ..... 32
11. APPENDIX D: RF certificates ..... 33
11.1. RED directive (Europe) ..... 33
11.2. FCC rules (U.S.A.) ..... 35
11.3. IC (Canada) ..... 35
11.4. Other countries ..... 36
12. APPENDIX E: RF communication ..... 37
12.1. RF features ..... 37
12.2. RF specifications ..... 37
12.3. EIRP ..... 38

***TRIXELL PROPRIETARY INFORMATION***
*Copyright © by 2025 TRIXELL. All rights reserved. This document and the information contained therein are TRIXELL's exclusive property.*
*Any copy and/or disclosure thereof in any form whatsoever are subject to TRIXELL's prior written consent.*

# LIST OF TABLES

Table 1: Reference documents ..... 9
Table 2: Acronyms ..... 10
Table 3: Connector pin-out for connector unit ..... 12
Table 4: Connection pin-out for Accessory connector ..... 13
Table 6: Power supply connector pin-out ..... 14
Table 7: RJ45 connector pin-out ..... 15
Table 8: Connector pin-out for backup cable ..... 16
Table 9: Cleaning agent list ..... 25
Table 11: European countries ..... 33
Table 12: RF specifications ..... 37

***TRIXELL PROPRIETARY INFORMATION***
*Copyright © by 2025 TRIXELL. All rights reserved. This document and the information contained therein are TRIXELL's exclusive property.*
*Any copy and/or disclosure thereof in any form whatsoever are subject to TRIXELL's prior written consent.*

# LIST OF FIGURES

Figure 1: Top view (sensitive side) ..... 7
Figure 2: Bottom view (battery side) ..... 8
Figure 3: Backup cable connector ..... 12
Figure 4: Accessory connector ..... 13
Figure 6: Power supply connector ..... 14
Figure 7: RJ45 connector ..... 15
Figure 8: Backup cable connector ..... 16
Figure 9: Spatial relationship ..... 20
Figure 10: Identification label ..... 29
Figure 11: pixium 2430 EZ3 NDT main label ..... 29
Figure 12: pixium 3543 EZ3 NDT main label ..... 29

***TRIXELL PROPRIETARY INFORMATION***
*Copyright © by 2025 TRIXELL. All rights reserved. This document and the information contained therein are TRIXELL's exclusive property.*
*Any copy and/or disclosure thereof in any form whatsoever are subject to TRIXELL's prior written consent.*

# 1. PRESENTATION

## 1.1. INTRODUCTION

This manual describes the installation and operation of a **pixium EZ3 NDT** digital X-ray detector. It also provides information for service and safety operation. It is intended for use by a System integrator. Please read this manual carefully before performing any installation or use of a **pixium EZ3 NDT** detector.

This manual is intended to help integrators in the installation of a **pixium EZ3 NDT** detector and its first operation. The figures and data given in this manual shall be considered as indicative and are not contractual. Consult TRIXELL for additional information.

## 1.2. GENERAL DESCRIPTION

**pixium EZ3 NDT** detector is a part of a digital image acquisition chain in an overall Radiological System. It features a portable equipment designed for mobile applications.

**pixium EZ3 NDT** detector complies with ISO 4090 standard for the external dimensions.

## 1.3. DETECTOR

The detector consists of a complete carbon fibre housing. They integrate:

- LEDs indicators for internal status,
- NFC module for pairing with host system,
- ON / OFF button,
- Display,
- Connector for a dedicated cable,
- Specific connector for power supply / Ethernet link
- A removable battery,
- Identification, warning labels and RF certificate ID (refer to appendix A for label drawings).

It does not include internal lead shielding against X-rays.

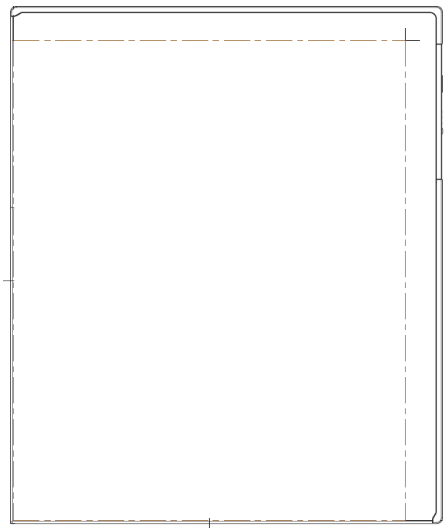

pixium 3543 EZ3 NDT

**Figure 1: Top view (sensitive side)**

***TRIXELL PROPRIETARY INFORMATION***
*Copyright © by 2025 TRIXELL. All rights reserved. This document and the information contained therein are TRIXELL's exclusive property.*
*Any copy and/or disclosure thereof in any form whatsoever are subject to TRIXELL's prior written consent.*

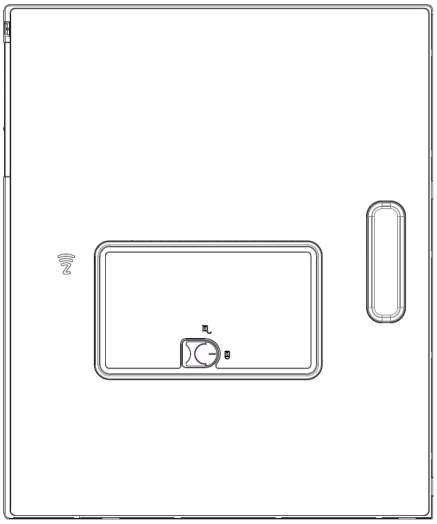

pixium 3543 EZ3 NDT

**Figure 2: Bottom view (battery side)**

Please note that the overfilm (color and printing) could be customized by customers on request.

## 1.4. DELIVERY

The standard **pixium EZ3 NDT** delivery includes:

- the detector,
- one backup cable(Cable EZ3),
- one battery (Battery EZ X),
- one battery charger (Charger EZ X),
- accompanying documentation.

Note that each customer may have a specific configuration for delivery.

The standard **pixium EZ3 NDT** delivery does not include in particular:

- an external power supply (part of the customer System),

## 1.5. IDENTIFICATION

The identification labels on the battery side of the detector housing provide information for :

- type (**pixium EZ3 NDT**)
- part number (P/N)
- revision code (Rev.)
- serial number (S/N)
- manufacturing date
- connections (power supply inputs / communication links)
- various warnings and cautions

See appendix A for label models.

## 1.6. STANDARDS

The **pixium EZ3 NDT** is:

- a class B product according to EN 55011 standard

The **pixium EZ3 NDT** is labeled as follow:

- CE

***TRIXELL PROPRIETARY INFORMATION***
*Copyright © by 2025 TRIXELL. All rights reserved. This document and the information contained therein are TRIXELL's exclusive property.*
*Any copy and/or disclosure thereof in any form whatsoever are subject to TRIXELL's prior written consent.*

## 1.7. REFERENCE DOCUMENTS

| Bookmark | Document title | Reference | CTD |
|---|---|---|---|
| [EUM] | End User Manual | 63150984 | 108 |
| [PTS] | Product Technical Specification | 63139627 | 306 |
| [PSS] | Product Standard Specification | 63139630 | 306 |
| [MIS] | Mechnical Interface Specification | 63139629 | 306 |
| [EIS] | Electrical Interface Specification | 63139138 | 306 |
| [UCS] | Use Case Specification | 63xxxxxx | 306 |
| [AID] | Application Interface Definition | 63139620 | 108 |
| [OUT_DRW] | Outline drawing | 3543: 63140988 | 041 |
| [DISM_DRW] | Dismantling drawing | 63xxxxxx | 066 |
| [SCC] | Standard Compliance Certificate | 3543: 63xxxxxx | 600 |
| [BATT_USR] | Battery EZ X user manual | 63127737 | 108 |
| [CHG_USR] | Charger EZ X user manual | 63132829 | 108 |
| [P3543_STR] | Unpacking instructions | 62756802 | 108 |

Table 1: Reference documents

Note: Be sure to use the latest revision of these documents

## 1.8. DEFINITION, ACRONYMS, ABREVIATION

The following table presents the acronyms that may be used in this document:

| Acronyms | Definition |
|---|---|
| CCK | Complementary Code Keying |
| ADC | Analog to Digital Converter |
| CE | Conformité Européenne (meaning European Conformity) |
| COA | Condition Of Acceptability |
| DC | Direct Current |
| EIRP | Equivalent Isotropically Radiated Power |
| EMC | Electro Magnetic Compatibility |
| ESD | Electro-Static Discharge |
| FCC | Federal Communications Commission |
| IEC | International Electro-technical Committee |
| ISO | International Standard Organization |
| ISM | Industrial, Scientific and Medical |
| LED | Light Emitting Diode |
| OFDM | Orthogonal Frequency-Division Multiplexing |
| PE | Protective Earth |
| RF | Radio Frequency |
| SIRN | Software Integration Release Note |

***TRIXELL PROPRIETARY INFORMATION***
*Copyright © by 2025 TRIXELL. All rights reserved. This document and the information contained therein are TRIXELL's exclusive property.*
*Any copy and/or disclosure thereof in any form whatsoever are subject to TRIXELL's prior written consent.*

| Acronyms | Definition |
|---|---|
| TBD | To Be Defined |
| TDLP | Trixell Detector Link Protocol |

Table 2: Acronyms

**TRIXELL PROPRIETARY INFORMATION**
*Copyright © by 2025 TRIXELL. All rights reserved. This document and the information contained therein are TRIXELL's exclusive property.*
*Any copy and/or disclosure thereof in any form whatsoever are subject to TRIXELL's prior written consent.*

# 2. INSTALLATION

## 2.1. INSTALLATION REQUIREMENTS

Components needed for installation and operation are the following:

- One **pixium EZ3 NDT** detector
- One Charger EZ X (including its external power supply)
- One Battery EZ X
- One external single DC power supply (+12V) (not provided)
- One access point (not provided)

During installation, ensure that neither a sharp corner nor edge can damage the cabling.

Mechanical fixation of cables and connectors must be provided in order to prevent unnecessary wear out of the cables.

## 2.2. INSTALLATION PROCEDURE

Please follow the below instructions before switching on the detector:

- Remove detector from its original packaging. Refer to [P3543_STR] for unpacking instructions.
- In case a power supply is available, compliant with [EIS] requirement, power connector of the Cable EZ3 shall be plugged to this power supply.
- If a charged battery is available, it can be plugged into the detector on its backside, instead to use the cable for power.
- Battery EZ X delivered in its original packaging can be plugged directly into the detector.
- Ethernet connector of the Cable EZ3 shall be plugged to network interface provided by the system and the power connector shall be connected to external power supply provided by the system
- Then the magnetic connector of the cable can be plugged to the detector. There are two possible orientations to plug this cable: both orientations can be used for proper operation.
- System shall be compatible with following default values of the detector for network compatibility:
  - host IP address : 192.168.1.5
- If this is not the case, user shall use the infra-red link or NFC to set correct network configuration to the detector.
- Configure the access point with the correct country code (please refer to user manual of access point)
- First operation shall be done either by cable or infra-red. Wi-Fi settings (Wi-Fi SSID, Wi-Fi password) shall be performed through System interface during this first operation.

### 2.2.1. MECHANICAL INSTALLATION

**pixium EZ3 NDT** is compatible with ISO 4090 cassette holder size

**Constraints***:* **pixium EZ3 NDT** is qualified to be exposed to variations of accelerations refer to Appendix B environmental conditions section. The detector can't be used with non-natural variations of pressure.

**Tightness***:* **pixium EZ3 NDT** (alone as well as with the battery connected) has a degree of protection against ingress of water of IP 65 / 67 according to IEC 60529.

*TRIXELL PROPRIETARY INFORMATION*
*Copyright © by 2025 TRIXELL. All rights reserved. This document and the information contained therein are TRIXELL's exclusive property.*
*Any copy and/or disclosure thereof in any form whatsoever are subject to TRIXELL's prior written consent.*

### 2.2.2. CONNECTICS

#### *2.2.2.1. Connector unit*

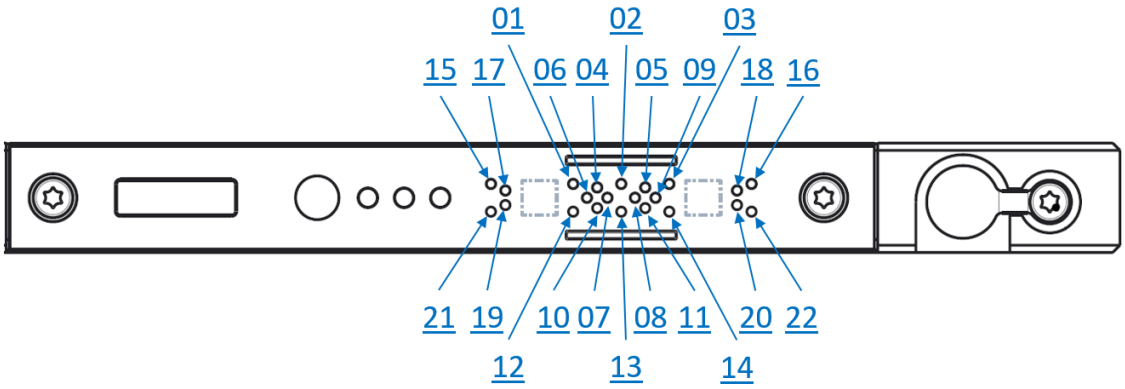


Figure 3: Backup cable connector

| Pin number | Signal |
|---|---|
| 01 | GND_SHIELD |
| 02 | GND_SHIELD |
| 03 | GND_SHIELD |
| 04 | TXRXP_B |
| 05 | TXRXM_A |
| 06 | P12V |
| 07 | GND |
| 08 | GND |
| 09 | P12V |
| 10 | TXRXM_B |
| 11 | TXRXP_A |
| 12 | GND_SHIELD |
| 13 | GND_SHIELD |
| 14 | GND_SHIELD |
| 15 | GND_SHIELD |
| 16 | GND_SHIELD |
| 17 | TXRXP_C |
| 18 | TXRXM_D |
| 19 | TXRXM_C |
| 20 | TXRXP_D |
| 21 | GND_SHIELD |
| 22 | GND_SHIELD |

Table 3: Connector pin-out for connector unit

***TRIXELL PROPRIETARY INFORMATION***
*Copyright © by 2025 TRIXELL. All rights reserved. This document and the information contained therein are TRIXELL's exclusive property.*
*Any copy and/or disclosure thereof in any form whatsoever are subject to TRIXELL's prior written consent.*

#### 2.2.2.2. Accessory connector

pixium EZ3 NDT includes an accessory connector for specific features as external AEC or external trigger switch:

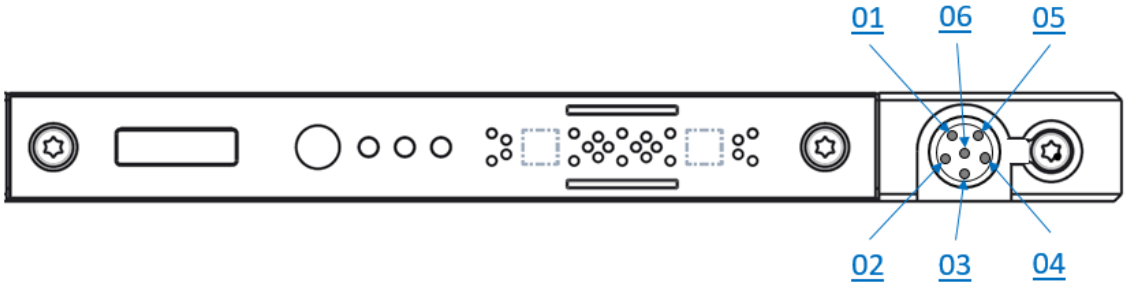


Figure 4: Accessory connector

| Pin number | Signal | Comment |
|---|---|---|
| 1 | DEADMAN_SW | |
| 2 | 5VDC | |
| 3 | RS232-TXD | |
| 4 | RS232-RXD | |
| 5 | GND | |
| 6 | XR_ON | Maximum voltage: 5 V |

Table 4: Connection pin-out for Accessory connector

**TRIXELL PROPRIETARY INFORMATION**
*Copyright © by 2025 TRIXELL. All rights reserved. This document and the information contained therein are TRIXELL's exclusive property.*
*Any copy and/or disclosure thereof in any form whatsoever are subject to TRIXELL's prior written consent.*

#### 2.2.2.3. Cable EZ3: Power supply

Backup cable contains a double insulated connector on system side for power supply (connector reference given in [EIS] document):

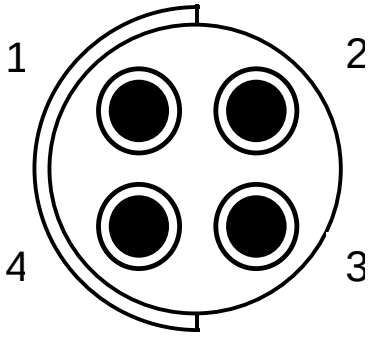


Figure 5: Power supply connector

| Pin number | Signal |
|---|---|
| 1 | P12V |
| 2 | - |
| 3 | GND |
| 4 | - |

Table 5: Power supply connector pin-out

**- CAUTION -**

**Power supply polarity inversion or out of range power supply (including a missing power supply) may harm the detector.**

**Be sure to correctly connect and clamp the power supply cable and the connector.**

**Check the power supply polarity before switching on. There is no hazard resulting from switching on and off the power supply.**

*TRIXELL PROPRIETARY INFORMATION*
*Copyright © by 2025 TRIXELL. All rights reserved. This document and the information contained therein are TRIXELL's exclusive property.*
*Any copy and/or disclosure thereof in any form whatsoever are subject to TRIXELL's prior written consent.*

### 2.2.2.4. Cable EZ3: TDLP link

Cable EZ3 contains a RJ45 connector on system side:

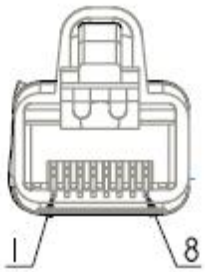


Figure 6: RJ45 connector

| Pin number | Signal |
|---|---|
| 1 | TXRXP_A |
| 2 | TXRXM_A |
| 3 | TXRXP_B |
| 4 | TXRXP_C |
| 5 | TXRXM_C |
| 6 | TXRXM_B |
| 7 | TXRXP_D |
| 8 | TXRXM_D |

Table 6: RJ45 connector pin-out

**TRIXELL PROPRIETARY INFORMATION**
*Copyright © by 2025 TRIXELL. All rights reserved. This document and the information contained therein are TRIXELL's exclusive property.*
*Any copy and/or disclosure thereof in any form whatsoever are subject to TRIXELL's prior written consent.*

### 2.2.2.5. Cable EZ3: Detector connector

A connector is accessible on the left side of the detector housing, in order to connect a cable from the System. The purpose is to recharge the battery when discharged and to allow going on with image acquisition.

The attachment of the cable to the detector can be done in two orientations (rotation of 180° is allowed without impact on the connection).

When the cable is attached on System side and connected to the detector, the Wi-Fi operation is disabled and data transfer is managed through this cable (Ethernet link). The cable can be “hot-plugged”, meaning it can be plugged and unplugged at any time without special precaution.

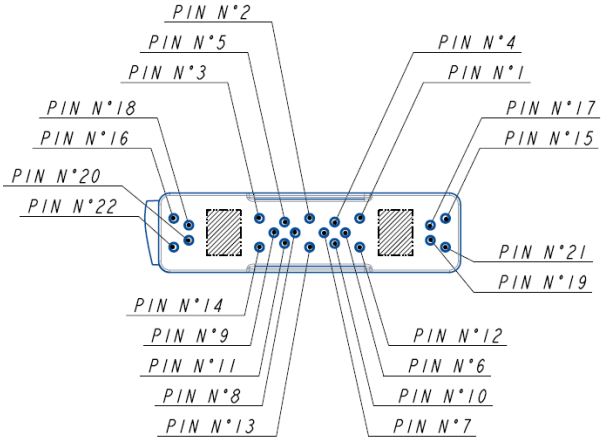


Figure 7: Backup cable connector

| Pin number | Signal |
|---|---|
| 1 | GND_SHIELD |
| 2 | GND_SHIELD |
| 3 | GND_SHIELD |
| 4 | TXRXP_B |
| 5 | TXRXM_A |
| 6 | P12V |
| 7 | GND |
| 8 | GND |
| 9 | P12V |
| 10 | TXRXM_B |
| 11 | TXRXP_A |
| 12 | GND_SHIELD |
| 13 | GND_SHIELD |
| 14 | GND_SHIELD |
| 15 | GND_SHIELD |
| 16 | GND_SHIELD |
| 17 | TXRXP_C |
| 18 | TXRXM_D |
| 19 | TXRXM_C |
| 20 | TXRXP_D |
| 21 | GND_SHIELD |
| 22 | GND_SHIELD |

Table 7: Connector pin-out for backup cable

**TRIXELL PROPRIETARY INFORMATION**
*Copyright © by 2025 TRIXELL. All rights reserved. This document and the information contained therein are TRIXELL’s exclusive property.*
*Any copy and/or disclosure thereof in any form whatsoever are subject to TRIXELL’s prior written consent.*

Note that Cable EZ is compatible with pixium EZ3 NDT. Nevertheless, the data rate will be reduced to 100Mb/s.

### 2.2.3. X-RAY GENERATOR CONNECTION

**X-Ray source:** The emission of the ionizing radiation is controlled by the system manufacturer.

**- CAUTION -**

**X-ray Enable signal only indicates to the System that the detector is ready to receive X-rays. It's the System responsibility to control the actual emission of X-rays.**

System accompanying documents must indicate:

- Procedure for X-ray alignment measurement
- Prohibition to order any radiation when a dysfunction is noticed by the operator, whatever this dysfunction

### 2.2.4. COOLING

**pixium EZ3 NDT** detector has a passive cooling concept.

Thermal interface resistance is defined in §10.4.

### 2.2.5. MAXIMUM ALLOWED WEIGHT ON THE DETECTOR

The X-ray input window (upper side of the detector) is made of a carbon fibre composite substrate, to protect the sensitive layer and active array of the detector.

This input window can withstand maximum weight without any image artefact:

| PUID | Description | Product | Min | Value | Max | Unit |
|---|---|---|---|---|---|---|
| [PTS-REQ-1680] PTS_perf_weight | The detector shall remain at full performance for: | 3543EZ3, 4343EZ3, 2430EZ3 | | | | |
| | • A mechanical weight uniformly distributed over the complete surface of: | 3543EZ3, 4343EZ3, 2430EZ3 | 150 | | | kg |
| | • A mechanical weight uniformly distributed over the surface of a 4 cm diameter disc of: | 3543EZ3, 4343EZ3, 2430EZ3 | 100 | | | kg |

This input window can withstand maximum weight without any irreversible degradation:

| PUID | Description | Product | Min | Value | Max | Unit |
|---|---|---|---|---|---|---|
| [PTS-REQ-1670] PTS_func_weight | The detector shall remain functional for: | 3543EZ3, 4343EZ3, 2430EZ3 | | | | |
| | • A mechanical weight uniformly distributed over the complete surface of: | 3543EZ3, 4343EZ3, 2430EZ3 | 300 | | | kg |
| | • A mechanical weight uniformly distributed over the surface of a 4 cm diameter disc of: | 3543EZ3, 4343EZ3, 2430EZ3 | 100 | | | kg |

### 2.2.6. DETECTOR SETTINGS

Initial detector settings are performed at the factory. Please refer to System Integrator installation procedure for eventual image quality optimization.

*TRIXELL PROPRIETARY INFORMATION*
*Copyright © by 2025 TRIXELL. All rights reserved. This document and the information contained therein are TRIXELL's exclusive property.*
*Any copy and/or disclosure thereof in any form whatsoever are subject to TRIXELL's prior written consent.*

#### 2.2.6.1. Communication link settings

For Wifi configuration and Ethernet configuration, please refer to §2.2

#### 2.2.6.2. Other settings

Not applicable

### 2.2.7. ADDITONAL ACCESSORIES

Spare battery is available upon request. Refer to Battery EZ X documentation for additional information.

Spare backup cable is available upon request.

No anti-scattered grid is delivered with the detector.

In some mode of operation, an automatic exposure control device can be used. This device is not part of the detector; it must be supplied and installed by the System integrator.

**TRIXELL PROPRIETARY INFORMATION**
*Copyright © by 2025 TRIXELL. All rights reserved. This document and the information contained therein are TRIXELL's exclusive property.*
*Any copy and/or disclosure thereof in any form whatsoever are subject to TRIXELL's prior written consent.*

# 3. FIRST OPERATION

## 3.1. SWITCH ON

Push the ON/OFF button to powered on the detector

## 3.2. SWITCH OFF

Push the ON/OFF button to powered off the detector.

Detector can also be stopped by a specific software command: refer to System information.

## 3.3. SOFTWARE FEATURES

The detector can send to the System, upon request, messages containing the hardware and software revision numbers, and the detector's serial number and date code.

The detector has built-in self-test features to provide the System with information for malfunction diagnostic.

The detector can generate, upon request issued by the System, error or warning messages in case of communication or internal electronics malfunctions (such as internal voltage drifts or breakdowns).

It is the System's responsibility to decide what to do in case of such an error or warning.

The detector has a built-in set of test patterns that can be used to check the operation of the detector's electronics (analog test patterns) and of the image data transmission (digital test patterns): refer to mode table.

If the detector has to reboot due to an internal error, it is able to come up to a normal operating mode by itself.

## 3.4. OPERATION MODES

For information about available operationnal modes please refer to mode table in [PTS].

### 3.4.1. TABLE MODE DEFINITION

The table mode is given in a separate document called SIRN provided to system integrator with each software version. Please refer to the SIRN before integrating a new software.

**- CAUTION -**

**Modes that are not described in the SIRN are TRIXELL reserved.**

***TRIXELL PROPRIETARY INFORMATION***
*Copyright © by 2025 TRIXELL. All rights reserved. This document and the information contained therein are TRIXELL's exclusive property.*
*Any copy and/or disclosure thereof in any form whatsoever are subject to TRIXELL's prior written consent.*

### 3.4.2. SPATIAL RELATIONSHIP

The relationship between the physical detectors and the corresponding images issued from an acquisition are as follow:

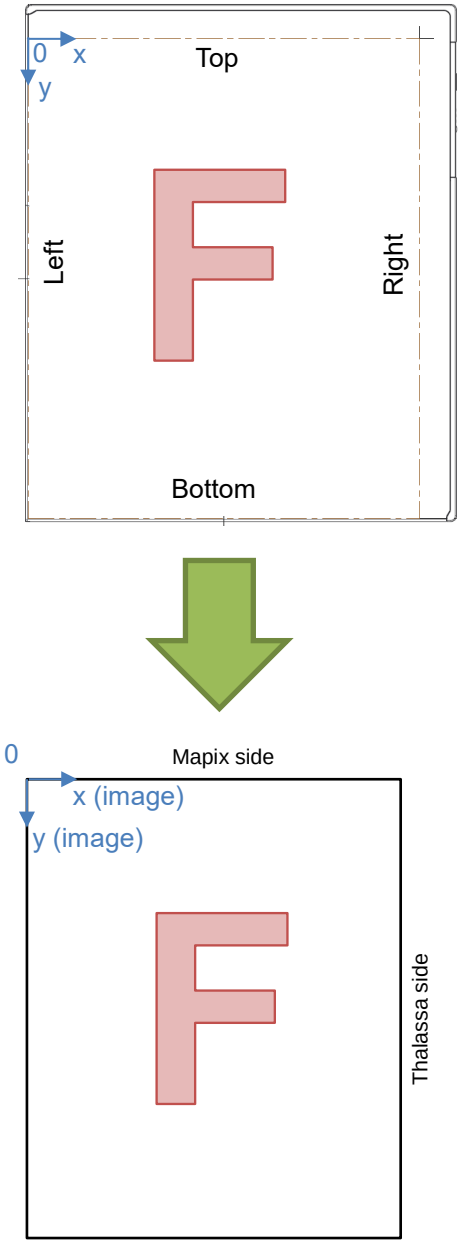


Figure 8: Spatial relationship

TRIXELL PROPRIETARY INFORMATION
Copyright © by 2025 TRIXELL. All rights reserved. This document and the information contained therein are TRIXELL's exclusive property.
Any copy and/or disclosure thereof in any form whatsoever are subject to TRIXELL's prior written consent.

# 4. CAUTIONS AND RECOMMENDATIONS

## 4.1. SAFETY MEASURES FOR THE SYSTEM INTEGRATOR

### 4.1.1. OPERATION CAUTIONS

**- CAUTION -**

**If pixium EZ3 NDT is modified, appropriate inspection and testing must be conducted to ensure continued safe use of the equipment.**

**Software cautions:**

- WiFi environment is complex and actual WiFi performances depend on local environment and installation. The System Integrator is responsible for the WiFi level of service.
- The system integrator is responsible for battery management and powering the detector. The system ensures that the detector is always powered during image cycle from the request image acquisition to end of image storage or transmission, otherwise current image is lost.
- The system integrator shall strictly follow the instruction given in the information files when a new software version has been released.
- The system integrator is responsible for managing the health check at detector startup. He must check the detector health using the BIST features.
- The system integrator must check that Hotswap is Available before doing any action with the battery (i.e.: changing the battery)

## 4.2. CYBERSECURITY

Pixium detector was developed taking into account Cyber Security constraints. The methodology for Trixell risk analysis is based on EBIOS and is compliant to ISO27K5.

Note: pixium EZ3 NDT detectors exists in two different SW versions:

- Legacy version based on SIS
- A secured version based on DDS

For legacy constraints, not all risk mitigations have been implemented in the SIS version.

System integrator and end customer shall put special care to limit non-authorized access to the detector. In particular, the detector should be stored in a restricted area in order to avoid stealing or unauthorized access to the detector.

Users shall take special care on WiFi password management:

- It is recommended to change the default WiFi password before first installation and on a frequent basis (at least every 90 days)
- A strong complexity/entropy should be put in place (at least 12 characters, at least one number and at least one none alpha numeric character)
- System should keep at least the last 3 passwords in memory. User should use different password.

It is recommended to have a second spare battery available in order to avoid impact regarding image acquisition, and transfer.

*TRIXELL PROPRIETARY INFORMATION*
*Copyright © by 2025 TRIXELL. All rights reserved. This document and the information contained therein are TRIXELL's exclusive property.*
*Any copy and/or disclosure thereof in any form whatsoever are subject to TRIXELL's prior written consent.*

## 4.3. TEMPERATURE

The Battery EZ X includes a thermal protection that shuts down the battery power in case of very high temperature causing the Front End unusable. Two situations can occur:

- Software protection: the battery pack will be usable as soon as the temperature drops below a specified limit,
- Hardware protection: the battery pack must be exchanged.

For more information about overheating protection please refer to [PTS] and [SIS] documents.

## 4.4. EMC COMPLIANCE

Medical electrical equipment needs special precautions regarding EMC and needs to be installed and put into service according to the EMC information.

**- CAUTION -**

**The use of accessories, transducers and cables other than those specified may result in increased emissions or decreased immunity of the equipment.**

**- CAUTION -**

**The detector should not be used adjacent to or stacked with other equipment and if adjacent or stacked use is necessary, the operability of the detector must be tested in the modified configuration.**

For more information about electromagnetic compatibility, please refer to appendix D .

### 4.4.1. CABLES AND CONNECTORS

The system integrator must take care with the kind of cables used to connect the pixium to the system :

TRIXELL recommends using a shielded power supply cable. The shielding must be properly connected to the dedicated connector metallic body in order to insure a good electrical connection. The EMC conformity of the detector was checked with 360° shielded cables.

## 4.5. WARM-UP TIME FROM A COLD START

| Specification | Product | Description | Min | Value | Max | Unit |
|---|---|---|---|---|---|---|
| **[PTS-REQ-0280]** PTS_cold_start_time_single | - | In single mode, the cold start time (time to reach full image performance) is: | - | - | 2 | h |

## 4.6. HUMIDITY

**Operating humidity:**

The operating humidity is valid within the operating temperature range. However customer shall ensure that detector is never submitted to condensation.

Customer shall take care that NO CONDENSATION occurs on the detector surface.

**Storage humidity:**

If detector is shipped mounted on the System to final customer: it is the responsibility of customer to ensure that detector is never exposed to condensation.

See Appendix B for environmental conditions.

*TRIXELL PROPRIETARY INFORMATION*
*Copyright © by 2025 TRIXELL. All rights reserved. This document and the information contained therein are TRIXELL's exclusive property.*
*Any copy and/or disclosure thereof in any form whatsoever are subject to TRIXELL's prior written consent.*

## 4.7. MAINTENANCE

No other preventive maintenance action is required except the calibration needed for image quality, whose periodicity is defined by the System program.

The battery can be replaced due to limited lifetime. In case of malfunction, the detector will be returned as it is to the manufacturer for repair. However, possible software release can be realized using the control link: contact TRIXELL customer service for instructions.

For maintenance please refer to system integrator maintenance manual.

## 4.8. SOFTWARE USE INFORMATIONS

**When detector is powered on,** the system must check the result of the **pixium EZ3 NDT** internal self-tests.

**During operation,** TRIXELL recommends the system to check:

- the header of every image sent by the detector,
- if possible, the internal temperature,
- the level of battery when powered by Battery EZ X,
- the WiFi link quality before requesting an image during free-cassette mode,
- the status of the anti-scatter grid (presence and type) thanks to dedicated command.

***TRIXELL PROPRIETARY INFORMATION***
*Copyright © by 2025 TRIXELL. All rights reserved. This document and the information contained therein are TRIXELL's exclusive property.*
*Any copy and/or disclosure thereof in any form whatsoever are subject to TRIXELL's prior written consent.*

# 5. TROUBLESHOOTING

## 5.1. POWER SUPPLY RANGE

During boot-up sequence, if the power supply fails out of the specified range, the detector might turn to a “Not available” status and will not go to normal operation (no image generated).

When connected to an external power (backup cable), if power supply output is too low or too high, the detector will not boot-up at all. Check your power supply to restart operation.

## 5.2. OTHER FAILURE

A “Not Available” status can also be issued by self-test functions, in case of internal failure on the electronic board (firmware error, memory failure...).

After verifying that power supply range and internal temperature are correct, and if the detector is still issuing a “Not Available” status, please contact Trixell field service.

If detector is not operational after reboot, Trixell recommends to retrieve error buffer through software command to get more information about last error. To do this, a communication link with system is mandatory (backup cable or wireless). See [AID] for detail.

***TRIXELL PROPRIETARY INFORMATION***
*Copyright © by 2025 TRIXELL. All rights reserved. This document and the information contained therein are TRIXELL’s exclusive property.*
*Any copy and/or disclosure thereof in any form whatsoever are subject to TRIXELL’s prior written consent.*

# 6. CLEANING AND DISINFECTIONS INSTRUCTIONS

The detector housing can be cleaned using a sweet towel, with respect to ESD safety conditions. Note that the detector has a degree of protection against ingress of water of IP 67 according to IEC 60529.

The sterilization, disinfecting, and cleaning conditions are defined by the customer in the context of the System use.

| List of cleaning agents |
|---|
| #1 Metrex Caviwipes |
| #2 Schuelke Perform |
| #3 Bode Mikrobac tissues |
| #4 Ecolab Incidin plus |
| #5 Anios Surfa'safe |
| #6 PDI Sani-Cloth Active |
| #7 PDI Sani-Cloth Plus |
| #8 Virox / Diversey AccelTB |
| #9 Isopropyl alcohol |
| #10 Ethanol 70 % |
| #101 Clorox - Dispatch towels with bleach |
| #102 Clorox - Hydrogen peroxide |
| #104 - Freshening Industries - Hospicare 70 |
| #105 - Freshening Industries - Hospicare Multi-Surface 60R |
| #106 - PDI - Sani-Cloth Prime |
| #107 - Tristel - Duo-wipes + ULT |

Table 8: Cleaning agent list

In addition to this list, the external film is known to be free of any cosmetic degradation when exposed to the following liquids:

- #F01 Metrex Caviwipes XL
- #F02 Schuelke Mikrozid sensitive wipes
- #F03 Schuelke Terralin protect
- #F04 Schuelke Mikrozid AF wipes
- #F05 Schuelke Mikrozid PAA wipes
- #F06 Bode Bacillol 30 Tissues
- #F07 Bode Dismozon plus
- #F08 Bode Bacillol AF
- #F09 Bode Mikrobac forte
- #F10 Ecolab Incidin pro
- #F11 Ecolab Incidin active
- #F12 Anios Surfanios premium
- #F13 Dr Schumacher Biguanid Flache
- #F14 Dr Schumacher Cleanisept (wipes 7.5% from liquid)
- #F15 Lysoform Lysoformin 3000
- #F16 Lysoform Clorina
- #F17 BBraun Meliseptol Rapid
- #F18 PDI Sani-Cloth AF3

***TRIXELL PROPRIETARY INFORMATION***
*Copyright © by 2025 TRIXELL. All rights reserved. This document and the information contained therein are TRIXELL's exclusive property.*
*Any copy and/or disclosure thereof in any form whatsoever are subject to TRIXELL's prior written consent.*

- #F19 PDI Sani-Cloth Super
- #F20 PDI Sani-Cloth Bleach
- #F21 Clorox Bleach germicidal wipes
- #F22 Diversey - sealed air Accel Five TB Wipes

Battery EZ X is considered as a part of the Front End, so same list of liquids applies.

***TRIXELL PROPRIETARY INFORMATION***
*Copyright © by 2025 TRIXELL. All rights reserved. This document and the information contained therein are TRIXELL's exclusive property.*
*Any copy and/or disclosure thereof in any form whatsoever are subject to TRIXELL's prior written consent.*

# 7. ECO-DESIGN

## 7.1. RECYCLING/REFURBISHMENT

Refer to pixium detector End Of Life datasheet (available on demand) for information about detector recycling and refurbishment.

### 7.1.1. BATTERY

The end user must be clearly informed that battery packs Battery EZ X used in **pixium EZ3 NDT** contain hazardous substances for the environment and must take all preventive actions to manage the battery end of life (recycling plan).

### 7.1.2. FRONT END, BACKUP CABLE AND BATTERY CHARGER

TRIXELL is in charge of the recycling of **pixium EZ3 NDT** and their accessories (Cable EZ3 and Charger EZ X). TRIXELL's customers are in charge of managing the way to collect these products (end of their life or out of order) and ship them to TRIXELL for recycling.

Information:

- **pixium EZ3 NDT** contains Thallium-doped Cesium Iodide scintillator material (Thallium qty < 2 g)
- **pixium EZ3 NDT** contains one or more lead plates of several sizes

TRIXELL expects its customers to take care of the recycling of the **pixium EZ3 NDT** within the framework of the System recycling procedure.

## 7.2. REACH INFORMATION (FOR EUROPE ONLY)

Information on declarable substances are given in BOMcheck website (http://bomcheck.net/) accessible by our direct customers.

***TRIXELL PROPRIETARY INFORMATION***
*Copyright © by 2025 TRIXELL. All rights reserved. This document and the information contained therein are TRIXELL's exclusive property.*
*Any copy and/or disclosure thereof in any form whatsoever are subject to TRIXELL's prior written consent.*

# 8. MANUFACTURER

pixium EZ3 NDT is manufactured by:

**THALES AVS FRANCE SAS**
**460, rue du Pommarin**
**38430 MOIRANS FRANCE**

Contact your local representative for additional information.

***TRIXELL PROPRIETARY INFORMATION***
*Copyright © by 2025 TRIXELL. All rights reserved. This document and the information contained therein are TRIXELL's exclusive property.*
*Any copy and/or disclosure thereof in any form whatsoever are subject to TRIXELL's prior written consent.*

# 9. APPENDIX A: PIXIUM DETECTOR IDENTIFICATION LABELS

## 9.1. LABELS

The labels presented below are not contractual and done for information

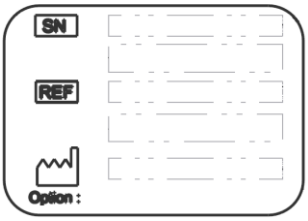


Figure 9: Identification label

**TBD**

Figure 10: pixium 2430 EZ3 NDT main label

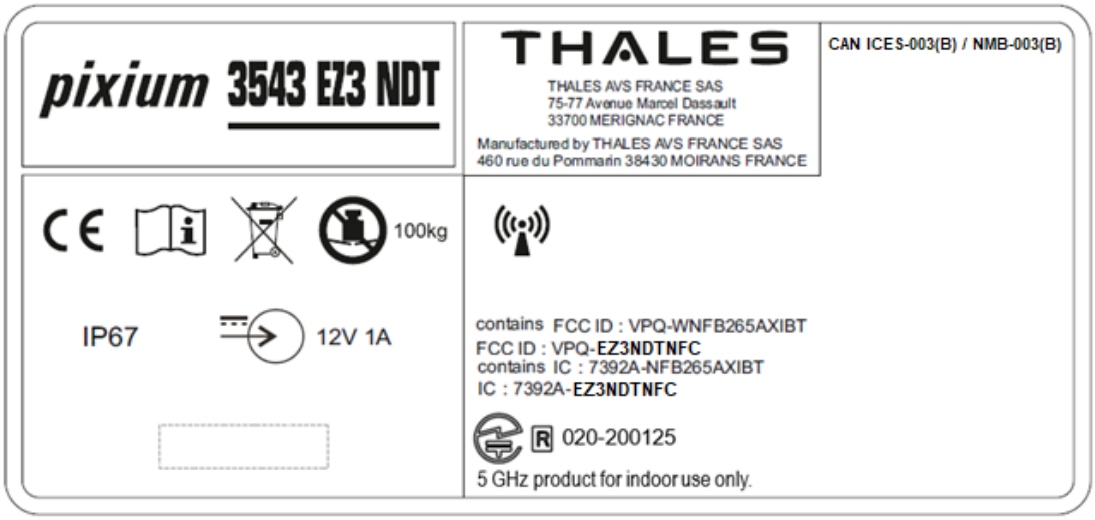


Figure 11: pixium 3543 EZ3 NDT main label

Note that empty zone is reserved for RF certificate ID. Location of logos may slightly differ on the product.

*TRIXELL PROPRIETARY INFORMATION*
*Copyright © by 2025 TRIXELL. All rights reserved. This document and the information contained therein are TRIXELL's exclusive property.*
*Any copy and/or disclosure thereof in any form whatsoever are subject to TRIXELL's prior written consent.*

# 10. APPENDIX B: PIXIUM DETECTOR SUMMARY SHEET

## 10.1. IMAGE GEOMETRY

Transmitted image size:

| Specification | Product | Description | Min | Value | Max | Unit |
|---|---|---|---|---|---|---|
| **[PTS-REQ-0740]** PTS_transmitted_img_h | 2430 | Width: | - | - | 2336 | pel |
| | 3543 | Width: | - | - | 3520 | pel |
| | 4343 | Width: | - | - | 4320 | pel |
| **[PTS-REQ-0750]** PTS_transmitted_img_v | 2430 | Height: | - | - | 2880 | pel |
| | 3543 | Height: | - | - | 4316 | pel |
| | 4343 | Height: | - | - | 4316 | pel |

Pitch size:

| Specification | Product | Description | Min | Value | Max | Unit |
|---|---|---|---|---|---|---|
| **[PTS-REQ-0760]** PTS_pitch | - | Pitch: | - | 98.75 | - | µm |

## 10.2. ELECTRO-OPTICAL PERFORMANCES

X-ray tube peak range:

| Specification | Product | Description | Min | Value | Max | Unit |
|---|---|---|---|---|---|---|
| **[PTS-REQ-1130]** PTS_x_ray_range_kvp | - | The X-ray tube peak voltage range is: | 40 | - | 150 | kVp |

Angle between the X-ray central propagation axis and the normal axis of the entrance plane:

| Specification | Product | Description | Min | Value | Max | Unit |
|---|---|---|---|---|---|---|
| **[PTS-REQ-1110]** PTS_x_ray_angle | - | The angle between the X-ray central propagation axis and the normal axis of the front-end entrance plane - taken at the center point of the matrix - should remain within the following range: | -45 | 0 | 45 | ° |

## 10.3. ELECTRICAL INTERFACE

Main ADC characteristics:

| Specification | Product | Description | Min | Value | Max | Unit |
|---|---|---|---|---|---|---|
| **[PTS-REQ-0810]** PTS_quantization_depth | - | The quantization depth of the digitized image data signals is equal to (independently of possible modes): | - | 16 | - | bits |

Input voltage on connector unit :

| Specification | Product | Description | Min | Value | Max | Unit |
|---|---|---|---|---|---|---|
| **[EIS-REQ-0510]** EIS_pwr_input_voltage_V | - | DC input power supply voltage shall be in the following range: | 10.8 | 12 | 13.2 | V |

***TRIXELL PROPRIETARY INFORMATION***
*Copyright © by 2025 TRIXELL. All rights reserved. This document and the information contained therein are TRIXELL's exclusive property.*
*Any copy and/or disclosure thereof in any form whatsoever are subject to TRIXELL's prior written consent.*

Input current on connector unit:

| Specification | Product | Description | Min | Value | Max | Unit |
|---|---|---|---|---|---|---|
| **[EIS-REQ-0040]** EIS_pwr_input_current_A | - | Typical and maximum sustained current in mode 1, gain 4, image readout. | - | 0.5 | 1 | A |
| **[EIS-REQ-0070]** EIS_pwr_input_inrush_A | - | Maximum peak current (at power ON or during image acquisition) shall be lower than: | - | - | 3.5 | A |

Thus, power supply must be conform to class PS1 (limited to 15 W max).

## 10.4. MECHANICAL INTERFACE

Information provided in Outline Drawing [OUT_DRW]

| Specification | Product | Description | Min | Value | Max | Unit |
|---|---|---|---|---|---|---|
| **[MIS-REQ-0250]** MIS_thermal interface_resistance | - | The maximum thermal resistance (Rh) shall be: | - | - | 0.7 | °C/W |

## 10.5. ENVIRONMENTAL CONDITIONS

### 10.5.1. TEMPERATURE

Storage temperature range:

| Specification | Product | Description | Min | Value | Max | Unit |
|---|---|---|---|---|---|---|
| **[PTS-REQ-1220]** PTS_storage_packed_temperature | - | Ambient air temperature variation that can be withstood by the detector during storage & transport without any damage. Provision shall be taken to avoid any condensing inside the detector. | -10 | - | +55 | °C |

Functional and operational (IQ) temperature range:

| Specification | Product | Description | Min | Value | Max | Unit |
|---|---|---|---|---|---|---|
| **[PTS-REQ-1570]** PTS_temperature_operational | - | The operational temperature range: is the ambient temperature range where the detector performances, reliability and image quality are guaranteed within the specifications. All the components shall respect their temperature specification in order to insure the reliability performance of the product. The accessible parts temperature limitations shall be respected. | +10 | +25 | +35 | °C |
| **[PTS-REQ-1600]** PTS_temperature_functional | - | The functional temperature range: is the ambient temperature range where the detector functionality is guaranteed but not the full image quality. All the components shall respect their temperature specification. | -20 | - | +50 | °C |

*TRIXELL PROPRIETARY INFORMATION*
*Copyright © by 2025 TRIXELL. All rights reserved. This document and the information contained therein are TRIXELL's exclusive property.*
*Any copy and/or disclosure thereof in any form whatsoever are subject to TRIXELL's prior written consent.*

### 10.5.2. AIR PRESSURE

Air pressure range on packed detector:

| Specification | Product | Description | Min | Value | Max | Unit |
|---|---|---|---|---|---|---|
| **[PTS-REQ-1260]** PTS_storage_packed_pressure | - | The detector can be stored and transported under following pressure conditions: | 500 | - | 1100 | mbar |

Air pressure range for operational performances (IQ):

| Specification | Product | Description | Min | Value | Max | Unit |
|---|---|---|---|---|---|---|
| **[PTS-REQ-1640]** PTS_pressure_range_operational | - | The functional and performance operating conditions for air pressure are: | 700 | 1000 | 1100 | mbar |
| **[PTS-REQ-1650]** PTS_dist_calib_pressure | - | The reference restrictions for distance to calibration conditions for air pressure are: | -50 | - | +50 | mbar |

### 10.5.3. HUMIDITY

Humidity range when pixium detector is packed:

| Specification | Product | Description | Min | Value | Max | Unit |
|---|---|---|---|---|---|---|
| **[PTS-REQ-1240]** PTS_storage_packed_humidity | - | The packed detector can be stored and transported without any damage in the following humidity range:<br>(Provision shall be taken to avoid any condensing inside the detector.) | 5 | - | 95 | %HR |

Operational and functional humidity range:

| Specification | Product | Description | Min | Value | Max | Unit |
|---|---|---|---|---|---|---|
| **[PTS-REQ-1620]** PTS_humidity_range_operational | - | The functional and performance operating conditions for relative humidity (non condensing) for a temperature up to 40°C are: | 20 | - | 80 | %HR |
| **[PTS-REQ-1620]** PTS_humidity_range_operational | - | The functional and performance operating conditions for relative humidity (non condensing) for a temperature up to 35°C are: | 20 | - | 90 | %HR |

### 10.5.4. VIBRATIONS AND SHOCKS

Vibrations and shock on unpacked detector:

| Specification | Product | Description | Min | Value | Max | Unit |
|---|---|---|---|---|---|---|
| **[PTS-REQ-1280]** PTS_storage_unpacked_shocks | - | In the **unpacked** case, the parameters of the test are: | - | - | 10 | g |
| **[PTS-REQ-1320]** PTS_storage_unpacked_vibrations | - | In the **unpacked** case, the parameters of the test are: | - | 2 | - | g |

***TRIXELL PROPRIETARY INFORMATION***
*Copyright © by 2025 TRIXELL. All rights reserved. This document and the information contained therein are TRIXELL's exclusive property.*
*Any copy and/or disclosure thereof in any form whatsoever are subject to TRIXELL's prior written consent.*

# 11. APPENDIX D: RF CERTIFICATES

It is important to refer to the relevant checklist to analyze the answer made by TRIXELL to the various clauses of the standards.

It is the responsibility to system integrator and/or hospital maintenance staff to properly configure the embedded WiFi module with respect to the country where **pixium EZ3 NDT** detector is installed.

Note that the WiFi functionalities can only be used in the countries listed hereafter. For other countries, **pixium EZ3 NDT** family detectors must be used in wired configuration and the WiFi modules switched off.

## 11.1. RED DIRECTIVE (EUROPE)

**pixium EZ3 NDT** is certified to be used in the following European countries:

| **Country (country code according to ISO 3166)** | | | | | |
|---|---|---|---|---|---|
| Andorra (AD) | Austria (AT) | Bosnia and Herzegovina (BA) | Belgium (BE) | Bulgaria (BG) | Croatia (HR) |
| Cyprus (CY) | Czech Republic (CZ) | Denmark (DK) | Estonia (EE) | France (FR) | Finland (FI) |
| Germany (DE) | Greece (GR) | Hungary (HU) | Iceland (IS) | Ireland (IE) | Italy (IT) |
| Latvia (LV) | Liechtenstein (LI) | Lithuania (LT) | Luxembourg (LU) | Malta (MT) | Monaco (MC) |
| Montenegro (ME) | Netherlands (NL) | Norway (NO) | Poland (PL) | Portugal (PT) | Romania (RO) |
| San Marino (SM) | Serbia (RS) | Slovakia (SK) | Slovenia (SI) | Spain (ES) | Sweden (SE) |
| Switzerland (CH) | The former Yugoslav Republic of Macedonia (MK) | Vatican city state (VA) | - | - | - |

Table 9: European countries

For all of these countries, the 5.15-5.35 GHz band is restricted to indoor use.

**Regulatory Statement:**

*TRIXELL PROPRIETARY INFORMATION*
*Copyright © by 2025 TRIXELL. All rights reserved. This document and the information contained therein are TRIXELL's exclusive property.*
*Any copy and/or disclosure thereof in any form whatsoever are subject to TRIXELL's prior written consent.*

Operation of this device is subjected to the following National regulations and may be prohibited to use if certain restriction should be applied.

English:

Hereby, *TRIXELL*, declares that the **pixium EZ3 NDT** is in compliance with the essential requirements and other relevant provisions of Directive 2014/53/UE.

Finnish:

*TRIXELL* vakuuttaa täten että **pixium EZ3 NDT** tyyppinen laite on direktiivin 2014/53/UE oleellisten vaatimusten ja sitä koskevien direktiivin muiden ehtojen mukainen.

Dutch:

Hierbij verklaart *TRIXELL* dat het toestel **pixium EZ3 NDT** in overeenstemming is met de essentiële eisen en de andere relevante bepalingen van richtlijn 2014/53/UE.

Bij deze verklaart *TRIXELL* dat deze **pixium EZ3 NDT** voldoet aan de essentiële eisen en aan de overige relevante bepalingen van Richtlijn 2014/53/UE.

French:

Par la présente, *TRIXELL* déclare que le **pixium EZ3 NDT** est conformes aux exigences essentielles et aux autres dispositions de la directive 2014/53/UE qui lui sont applicables.

Swedish:

Härmed intygar *TRIXELL* att denna **pixium EZ3 NDT** står I överensstämmelse med de väsentliga egenskapskrav och övriga relevanta bestämmelser som framgår av direktiv 2014/53/UE.

Danish:

Undertegnede *TRIXELL* erklærer herved, at følgende udstyr **pixium EZ3 NDT** overholder de væsentlige krav og øvrige relevante krav i direktiv 2014/53/UE

German:

Hiermit erklärt *TRIXELL*, dass sich **pixium EZ3 NDT** in Übereinstimmung mit den grundlegenden Anforderungen und den anderen relevanten Vorschriften der Richtlinie 2014/53/UE befindet". (BMWi).

Hiermit erklärt *TRIXELL* die Übereinstimmung des Gerätes **pixium EZ3 NDT** mit den grundlegenden Anforderungen und den anderen relevanten Festlegungen der Richtlinie 2014/53/UE. (Wien).

Greek:

ΜΕ ΤΗΝ ΠΑΡΟΥΣΑ *TRIXELL* ΔΗΛΩΝΕΙ ΟΤΙ **pixium EZ3 NDT** ΣΥΜΜΟΡΦΩΝΕΤΑΙ ΠΡΟΣ ΤΙΣ ΟΥΣΙΩΔΕΙΣ ΑΠΑΙΤΗΣΕΙΣ ΚΑΙ ΤΙΣ ΛΟΙΠΕΣ ΣΧΕΤΙΚΕΣ ΔΙΑΤΑΞΕΙΣ ΤΗΣ ΟΔΗΓΙΑΣ 2014/53/UE.

Italian:

Con la presente *TRIXELL* dichiara che questo **pixium EZ3 NDT** è conforme ai requisiti essenziali ed alle altre disposizioni pertinenti stabilite dalla direttiva 2014/53/UE.

Spanish:

Por medio de la presente *TRIXELL* declara que los **pixium EZ3 NDT** cumple con los requisitos esenciales y cualesquiera otras disposiciones aplicables o exigibles de la Directiva 2014/53/UE.

Portuguese:

***TRIXELL PROPRIETARY INFORMATION***
*Copyright © by 2025 TRIXELL. All rights reserved. This document and the information contained therein are TRIXELL's exclusive property.*
*Any copy and/or disclosure thereof in any form whatsoever are subject to TRIXELL's prior written consent.*

*TRIXELL* declara que este **pixium EZ3 NDT** está conforme com os requisitos essenciais e outras disposições da Directiva 2014/53/UE.

EU type examination certificate: RED_771

## 11.2. FCC RULES (U.S.A.)

This equipment has been tested and found to comply with the limits for a Class A digital device, pursuant to Part 15 of the FCC Rules. These limits are designed to provide reasonable protection against harmful interference when the equipment is operated in a commercial environment. This equipment generates, uses, and can radiate radio frequency energy and, if not installed and used in accordance with the instruction manual, may cause harmful interference to radio communications. Operation of this equipment in a residential area is likely to cause harmful interference in which case the user will be required to correct the interference at his own expense

**- FCC CAUTION -**

**Any changes or modifications not expressly approved by the party responsible for compliance could void the user's authority to operate this equipment.**

**RF Exposure mobile Device:**

This device complies with FCC and IC radiation exposure limits set forth for general population. This device must be installed to provide a separation distance of at least 20cm from all persons and must not be co-located or operating in conjunction with any other antenna or transmitter.

This device complies with Part 15 of the FCC Rules. Operation is subject to the following two conditions: (1) this device may not cause harmful interference, and (2) this device must accept any interference received, including interference that may cause undesired operation. received, including interference that may cause undesired operation.

contains FCC ID : VPQ-WNFB265AXIBT
FCC ID: VPQ-EZ3NDTNFC

## 11.3. IC (CANADA)

This device contains licence-exempt transmitter(s)/receiver(s) that comply with Innovation, Science and Economic Development Canada's licence-exempt RSS(s). Operation is subject to the following two conditions: (1) this device may not cause interference, and (2) This device must accept any interference, including interference that may cause undesired operation of the device.

*L'émetteur/récepteur exempt de licence contenu dans le présent appareil est conforme aux CNR d'Innovation, Sciences et Développement économique Canada applicables aux appareils radio exempts de licence. L'exploitation est autorisée aux deux conditions suivantes : (1) l'appareil ne doit pas produire de brouillage, et (2) l'appareil doit accepter tout brouillage radioélectrique subi, même si le brouillage est susceptible d'en compromettre le fonctionnement.*

**RF Exposure mobile Device:**

This device complies with ISED radiation exposure limits set forth for general population. This device must be installed to provide a separation distance of at least 20cm from all persons and must not be co-located or operating in conjunction with any other antenna or transmitter..

***Exposition aux radiations de l'appareil mobile:***

*TRIXELL PROPRIETARY INFORMATION*
*Copyright © by 2025 TRIXELL. All rights reserved. This document and the information contained therein are TRIXELL's exclusive property.*
*Any copy and/or disclosure thereof in any form whatsoever are subject to TRIXELL's prior written consent.*

*Le présent appareil est conforme aux niveaux limites d'exigences d'exposition RF aux personnes définies par ISDE. L'appareil ne doit pas être installé à proximité ou être utilisé en conjonction avec une autre antenne ou un autre émetteur.*

**- CAUTION -**

**The device for operation in the band 5150–5250 MHz is only for indoor use to reduce the potential for harmful interference to co-channel mobile satellite systems.**

**- AVERTISSEMENT -**

**Le dispositif fonctionnant dans la bande 5150-5250 MHz est réservé uniquement pour une utilisation à l'intérieur afin de réduire les risques de brouillage préjudiciable aux systèmes de satellites mobiles utilisant les mêmes canaux.**

contains IC: 7392A-NFB265AXIBT

IC: 7392A-EZ3NDTNFC

## 11.4. MIC (JAPAN)

No mandatory text required for Japan. Only label apposed on devices containing ID are required. Note that 5 GHz band is not allowed to be used outdoor.

R 020-200125

5 GHz product for indoor use only.

This equipment contains specified radio equipment that has been certified to the Technical Regulation Conformity Certification under the Radio Law

## 11.5. OTHER COUNTRIES

For countries not listed here before, the system integrator must disable the RF functionalities (see appropriate command in document [SIS]). In such configuration, **pixium EZ3 NDT** is compliant with CISPR 32 class A limits and can be considered as non-radio product.

In such countries, the end-users must not be allowed to activate the RF functionalities by their own.

***TRIXELL PROPRIETARY INFORMATION***
*Copyright © by 2025 TRIXELL. All rights reserved. This document and the information contained therein are TRIXELL's exclusive property.*
*Any copy and/or disclosure thereof in any form whatsoever are subject to TRIXELL's prior written consent.*

# 12. APPENDIX E: RF COMMUNICATION

Since **pixium EZ3 NDT** can be used without any cable, it exchanges data (as commands, synchronization images…) thanks to radio frequency modules which are able to operate in the ranges 2.412GHz…2.484GHz, 5.180GHz…5.320GHz, 5.500GHz…5.700GHz and 5.725GHz…5.825GHz.

The availability of some specific channels and/or operational frequency bands are country dependent and are firmware programmed at the factory to match the intended destination. The firmware setting is not accessible by the end-user.

**pixium EZ3 NDT** also contains a NFC module operating in 13.553 MHz ...13.657 MHz band.

## 12.1. RF FEATURES

- Operate at ISM frequency bands (2.4GHz and 5GHz)
- IEEE standards compatible: IEEE 802.11a, IEEE 802.11b, IEEE 802.11g, IEEE 802.11n; IEEE 802.11ac and IEEE 802.11ax
- WPA2-PSK/AES coding supported

## 12.2. RF SPECIFICATIONS

Functional specifications:

| | |
|---|---|
| **Standard** | IEEE 802.11ax/ac/a/b/g/n (2T2R) |
| **Operating frequency** | 2.400 GHz ~ 2.4835 GHz (2.4GHz ISM Band)<br>5.150 GHz ~5.850GHz (5GHz UNII Band) |
| **Modulation techniques** | 802.11b: DSSS (DBPSK, DQPSK, CCK)<br>802.11g: OFDM (BPSK, QPSK, 16-QAM, 64-QAM)<br>802.11n: OFDM (BPSK, QPSK, 16-QAM, 64-QAM)<br>802.11a: OFDM (BPSK, QPSK, 16-QAM, 64-QAM)<br>802.11ac: OFDM (BPSK, QPSK, 16-QAM, 64-QAM, 256-QAM)<br>802.11ax: OFDMA (BPSK, QPSK, 16-QAM, 64-QAM, 256-QAM, 1024-QAM) |
| **Data Rate** | 802.11b: 11Mbps<br>802.11a/g: 54Mbps<br>802.11n: MCS0~15<br>802.11ac: MCS0~9<br>802.11ax: HE0~11 |
| **Network architecture** | Infrastructure and Ad hoc modes |
| **Transmission** | MIMO 2x2 |

Table 10: RF specifications

*TRIXELL PROPRIETARY INFORMATION*
*Copyright © by 2025 TRIXELL. All rights reserved. This document and the information contained therein are TRIXELL's exclusive property.*
*Any copy and/or disclosure thereof in any form whatsoever are subject to TRIXELL's prior written consent.*

## 12.3. EIRP

Measured EIRP (according to EN 300 328 v2.2.2 and EN 301 893 v2.1.1) are provided in [EUM].

# END OF DOCUMENT

***TRIXELL PROPRIETARY INFORMATION***
*Copyright © by 2025 TRIXELL. All rights reserved. This document and the information contained therein are TRIXELL's exclusive property.*
*Any copy and/or disclosure thereof in any form whatsoever are subject to TRIXELL's prior written consent.*