HONDA

# Owner's Manual

## TILLER

## F220

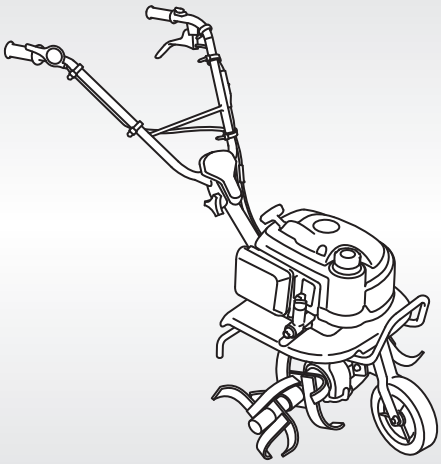

Includes US and Canadian Models

© 2024 Honda Motor Co., Ltd. -All Rights Reserved

**⚠ WARNING: ⚠**

The engine exhaust from this product contains chemicals known to the State of California to cause cancer, birth defects, or other reproductive harm.

Keep this owner's manual handy, so you can refer to it any time. This owner's manual is considered a permanent part of the tiller and should remain with the tiller if resold.

The information and specifications included in this publication were in effect at the time of approval for printing. Honda Motor Co., Ltd. reserves the right, however, to discontinue or change specifications or design at any time without notice and without incurring any obligation whatsoever.

# INTRODUCTION

Congratulations on your selection of a Honda tiller. We are certain you will be pleased with your purchase of one of the finest tillers on the market.

We want to help you get the best results from your new tiller and to operate it safely. This manual contains the information on how to do that; please read it carefully.

As you read this manual, you will find information preceded by a **NOTICE** symbol. That information is intended to help you avoid damage to your tiller, other property, or the environment.

We suggest you read the *Distributor's Limited Warranty (U.S.) / Distributor's Warranty (CA.)* to fully understand its coverage and your responsibilities of ownership. The *Distributor's Limited Warranty (U.S.) / Distributor's Warranty (CA.)* is a separate document that should have been given to you by your dealer.
If not, you can obtain a copy from your dealer or download the *Distributor's Limited Warranty (U.S.) / Distributor's Warranty (CA.)* from;
U.S.A http://powerequipment.honda.com/support/warranty
Canada http://powerequipment.honda.ca/parts-service/warranty

When your tiller needs scheduled maintenance, keep in mind that your Honda servicing dealer is specially trained in servicing Honda tillers and is supported by the parts and service divisions of American Honda. Your Honda servicing dealer is dedicated to your satisfaction and will be pleased to answer your questions and concerns.

# INTRODUCTION

## A FEW WORDS ABOUT SAFETY

Your safety and the safety of others are very important. And using this tiller safely is an important responsibility.

To help you make informed decisions about safety, we have provided operating procedures and other information on labels and in this manual. This information alerts you to potential hazards that could hurt you or others.

Of course, it is not practical or possible to warn you about all the hazards associated with operating or maintaining a tiller. You must use your own good judgment.

You will find important safety information in a variety of forms, including:

- **Safety Labels** — on the tiller.
- **Safety Messages** — preceded by a safety alert symbol ⚠ and one of three signal words: DANGER, WARNING, or CAUTION.

  These signal words mean:

  **⚠ DANGER** — You WILL be KILLED or SERIOUSLY HURT if you don't follow instructions.

  **⚠ WARNING** — You CAN be KILLED or SERIOUSLY HURT if you don't follow instructions.

  **⚠ CAUTION** — You CAN be HURT if you don't follow instructions.

- **Safety Headings** — such as *IMPORTANT SAFETY INFORMATION*.
- **Safety Chapter** — such as *TILLER SAFETY*.
- **Instructions** — how to use this tiller correctly and safely.

This entire book is filled with important safety information — please read it carefully.

# CONTENTS


**TILLER SAFETY ..... 5**
IMPORTANT SAFETY INFORMATION ..... 5
SAFETY LABEL LOCATIONS ..... 9

**CONTROLS ..... 11**
COMPONENT & CONTROL LOCATIONS ..... 11
CONTROLS ..... 13
Fuel Valve ..... 13
Choke Lever ..... 13
Engine Switch ..... 13
Starter Grip ..... 14
Throttle Lever ..... 14
Handlebar Height Adjuster ..... 14
Clutch Lever ..... 15
Drag Bar ..... 15
Front Wheel ..... 15

**BEFORE OPERATION ..... 16**
ARE YOU READY TO GET STARTED? ..... 16
IS YOUR TILLER READY TO GO? ..... 16
Check the Engine ..... 17
Check the Tiller ..... 17

**OPERATION ..... 18**
SAFE OPERATING PRECAUTIONS ..... 18
STARTING THE ENGINE ..... 19
OPERATING THE CONTROLS FOR TILLING ..... 21
HANDLING TIPS ..... 23
STOPPING THE ENGINE ..... 24

**SERVICING YOUR TILLER ..... 25**
THE IMPORTANCE OF MAINTENANCE ..... 25
MAINTENANCE SAFETY ..... 26
MAINTENANCE SCHEDULE ..... 27
REFUELING ..... 28
FUEL RECOMMENDATIONS ..... 29
ENGINE OIL LEVEL CHECK ..... 30
ENGINE OIL CHANGE ..... 31
ENGINE OIL RECOMMENDATIONS ..... 32
TRANSMISSION OIL LEVEL CHECK (USA model) ..... 33

# CONTENTS

**SERVICING YOUR TILLER (continued)**
AIR FILTER INSPECTION....36
AIR FILTER CLEANING....37
SPARK PLUG SERVICE....38
CLUTCH CABLE ADJUSTMENT....40
THROTTLE CABLE ADJUSTMENT....41
SPARK ARRESTER SERVICE (optional part)....42

**STORAGE....43**
STORAGE PREPARATION....43
Cleaning....43
Fuel....44
Engine Oil....47
Engine Cylinder....47
STORAGE PRECAUTIONS....48
REMOVAL FROM STORAGE....48

**TRANSPORTING....49**
BEFORE LOADING....49
LOADING AND UNLOADING....49

**TAKING CARE OF UNEXPECTED PROBLEMS....50**
ENGINE WILL NOT START....50
ENGINE LACKS POWER....51
POOR TILLING QUALITY....51

**TECHNICAL INFORMATION....52**
Serial Number Locations....52
Carburetor Modifications for High Altitude Operation....53
Emission Control System Information....54
Emission Control System Warranty....57
Specifications....58

**CONSUMER INFORMATION....59**
Dealer Locator Information....59
Honda Publications....59
Customer Service Information....60

**QUICK REFERENCE INFORMATION....Inside back cover**

# TILLER SAFETY

## IMPORTANT SAFETY INFORMATION

Honda tillers are designed to cultivate earth outdoors. Other uses can result in injury to the operator or damage to the tiller and other property.

Most injuries or property damage can be prevented if you follow all the instructions in this manual and on the tiller. The most common hazards are discussed below, along with the best way to protect yourself and others.

### Operator Responsibility

- You must be alert and in good physical condition to operate the tiller. Do not operate the tiller if you are tired, ill, or under the influence of alcohol, medication, or any substance that might impair your vision, dexterity, or judgment.
- Know how to stop the tiller quickly in case of emergency.
- Understand the use of all tiller controls.
- Keep a firm hold on the handlebars. They may tend to lift during clutch engagement.
- Be sure the drag bar is in place and properly adjusted.
- Be sure that anyone who operates the tiller receives proper instruction. Do not let children operate the tiller. Keep children and pets away from the area of operation.
- Before starting the engine, check that the tiller is not damaged and is in good condition.

### Carbon Monoxide Hazard

Your tiller's exhaust contains poisonous carbon monoxide gas, which you cannot see or smell.
Breathing carbon monoxide can KILL YOU IN MINUTES.
For your safety:

- Do not start or operate the engine in any closed or partially enclosed area, such as a garage.
- Never run the tiller in a closed or even partially closed area where people or pets may be present.
- Never operate the tiller near open doors, windows, or vents.
- Get fresh air and seek medical attention immediately if you suspect you have inhaled carbon monoxide.

Early symptoms of carbon monoxide exposure include headache, fatigue, shortness of breath, nausea, and dizziness. Continued exposure to carbon monoxide can cause loss of muscular coordination, loss of consciousness, and then death.

# TILLER SAFETY

### Fire and Burn Hazards

- The exhaust system gets hot enough to ignite some materials.
  - Keep the tiller at least 3 feet (1 meter) away from buildings and other equipment during operation.
  - Keep flammable materials away from the tiller.
- The muffler becomes very hot during operation and remains hot for a while after stopping the engine. Be careful not to touch the muffler while it is hot. Let the engine cool before storing the tiller indoors.

### Refuel With Care

Gasoline is extremely flammable, and gasoline vapor can explode.
Never remove the gas cap or add gasoline with the engine running.
Allow the engine to cool if it has been in operation.
Refuel only outdoors in a well-ventilated area and on a level surface.
Never fill containers inside a vehicle or on a truck or trailer bed with a plastic liner.
Never smoke near gasoline, and keep other flames and sparks away.
Do not overfill the fuel tank.
Make sure that any spilled fuel has been wiped up and cleaned before starting the engine.
Always store gasoline in an approved container.

### Avoid Rotating Tines

Rotating tines can cause serious cuts and even amputate body parts. Keep away from the tine area whenever the engine is running. If you need to work around the tines to clear object accumulation or for any other reason, always shut off the engine. After striking a foreign object, stop the engine, remove the spark plug cap, thoroughly inspect the machine for any damage, and repair the damage before restarting and operating the machine.
Wear heavy-duty gloves when you need to clean the tine area or handle the tines.

### Clear Tilling Area

Never attempt to make any adjustments while the engine is running.
A tine can throw rocks and other objects with enough force to cause serious injury. Before tilling, carefully inspect the area and remove all stones, sticks, bones, nails, pieces of wire, and other foreign objects. If children get close to the operation area, stop the tiller and shut off the engine. Never operate the tines over gravel.

**Keep Shields in Place**

Guards and shields are designed to protect you from being hit by thrown objects and to keep you from touching hot engine parts and moving components.
For your safety and the safety of others, keep all shields in place when the engine is running.

**Wear Protective Clothing**

Wearing protective clothing will reduce your risk of injury.
Do not wear loose clothing, jewelry, short pants, sandals, or go barefoot.
Wear gloves, eye protection, a long-sleeved shirt, and long pants made of heavy material. Keep clothing fastened.
Wear sturdy work boots with good toe protection and nonslip soles.

**Turn the Engine Off When Not Operating the Tiller**

If you need to leave the tiller for any reason, even just to inspect the area ahead, always turn the engine off.

**Slope Operation**

- When tilling on slopes, keep the fuel tank less than half full to minimize fuel spillage.
- Till across the slope (at equally spaced intervals) rather than up and down it.
- Be very careful when changing the direction of the tiller on a slope.
- Do not use the tiller on a slope of more than 10°. For your safety and the safety of others, exercise extreme care when using the tiller on a slope.

**Tilling Conditions**

Operate the tiller only in daylight or good artificial light. Do not operate the tiller at night or under poor light conditions.
Never operate the machine at high transport speeds on hard or slippery surfaces.

### Attachments and Modifications

Do not make any modifications to your tiller. Modifying your tiller or installing non-Honda attachments can make your tiller unsafe.
If you need attachments for your tiller, use only Honda Genuine attachments (see page 59). These products have been designed for your tiller.
Non-Honda attachments are usually designed for universal applications. Although aftermarket attachments may fit on your tiller, they may not meet factory specifications and could make your tiller unsafe.

## SAFETY LABEL LOCATIONS

These labels warn you of potential hazards that can cause serious injury. Read them carefully. If a label comes off or becomes hard to read, contact your servicing dealer for a replacement.

### USA model

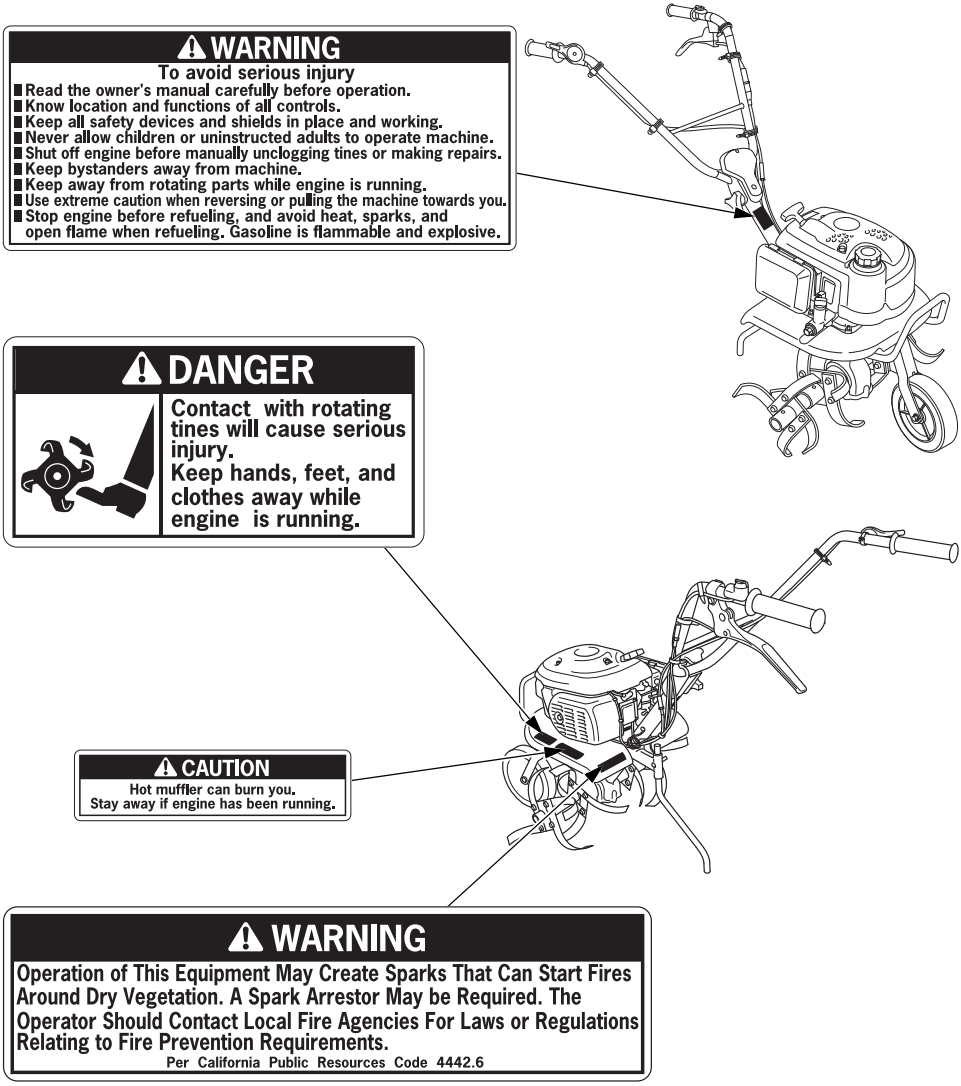

## Canadian model

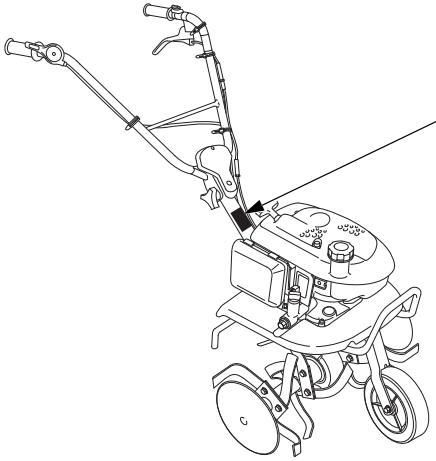

**⚠ WARNING**

**To avoid serious injury**

- Read the owner's manual carefully before operation.
- Know location and functions of all controls.
- Keep all safety devices and shields in place and working.
- Never allow children or uninstructed adults to operate machine.
- Shut off engine before manually unclogging tines or making repairs.
- Keep bystanders away from machine.
- Keep away from rotating parts while engine is running.
- Use extreme caution when reversing or pulling the machine towards you.
- Stop engine before refueling, and avoid heat, sparks, and open flame when refueling. Gasoline is flammable and explosive.

*

**⚠ AVERTISSEMENT**

**Pour éviter une blessure grave**

- Lire attentivement le manuel du propriétaire avant l'utilisation.
- Étudier l'emplacement et les fonctions de toutes les commandes.
- Maintenir tous les dispositifs de sécurité et de protection en place et en bon état.
- Ne jamais permettre à des enfants ou à des adultes non formés d'utiliser l'appareil.
- Couper le moteur avant de débloquer manuellement les fourchons ou de faire des réparations.
- S'assurer que les passants restent loin de l'appareil.
- S'éloigner des pièces rotatives quand le moteur fonctionne.
- Faire preuve de grande prudence lors de la marche arrière ou quand on tire l'appareil vers soi.
- La gazoline est inflammable et peut exploser. couper le moteur, s'assurer que l'appareil est loin de la chaleur, des étincelles et de la flamme nue lors du remplissage.

**⚠ DANGER**

Contact with rotating tines will cause serious injury.
Keep hands, feet, and clothes away while engine is running.

*

**⚠ DANGER**

Eviter tout contact avec les outils rotatifs sous risques de blessures graves.
Eloigner mains, pieds, vetements lorsque la machine tourne.

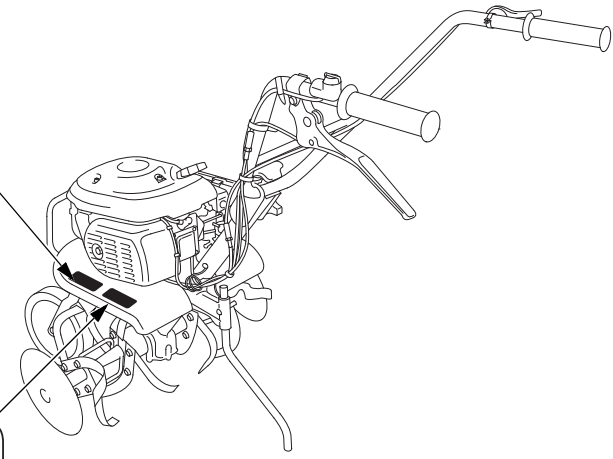

**⚠ CAUTION**

Hot muffler can burn you.
Stay away if engine has been running.

*

**⚠ ATTENTION**

Il y a risque de brûlure si le silencieux est chaud.
Rester à l'écart si le moteur vient de tourner.

***: French labels come with the tiller.**

# CONTROLS

## COMPONENT & CONTROL LOCATIONS

### USA model

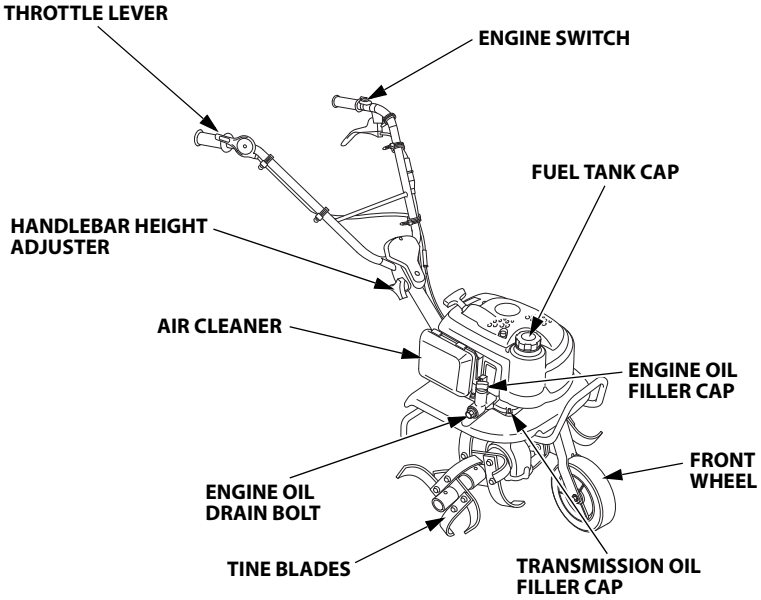


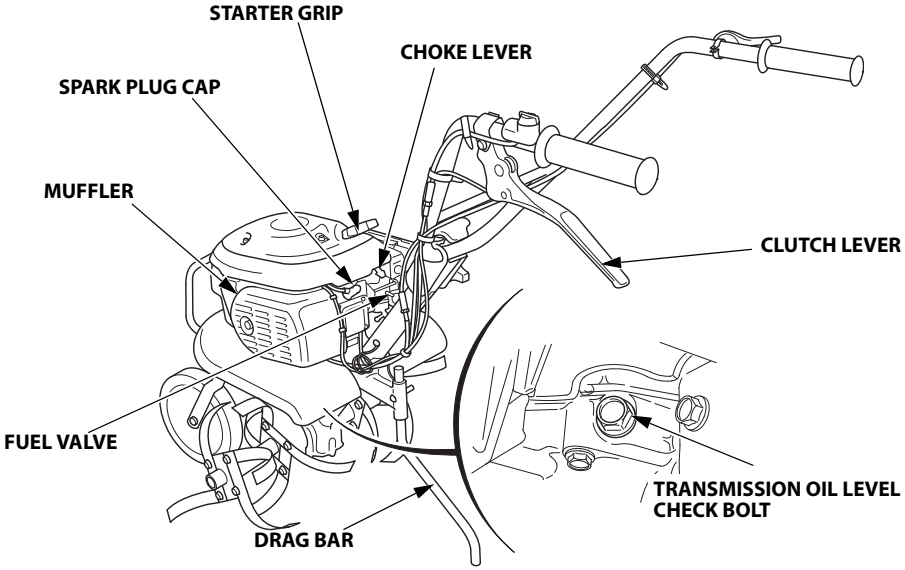

## Canadian model

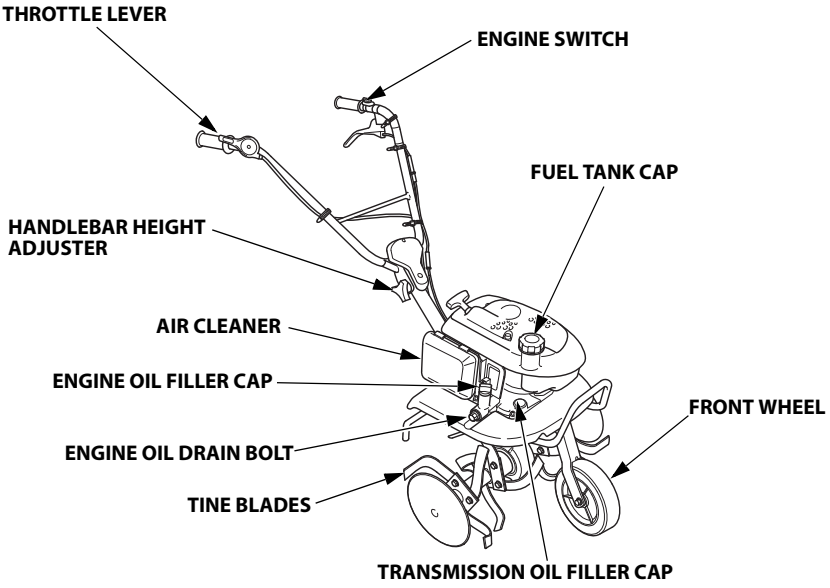


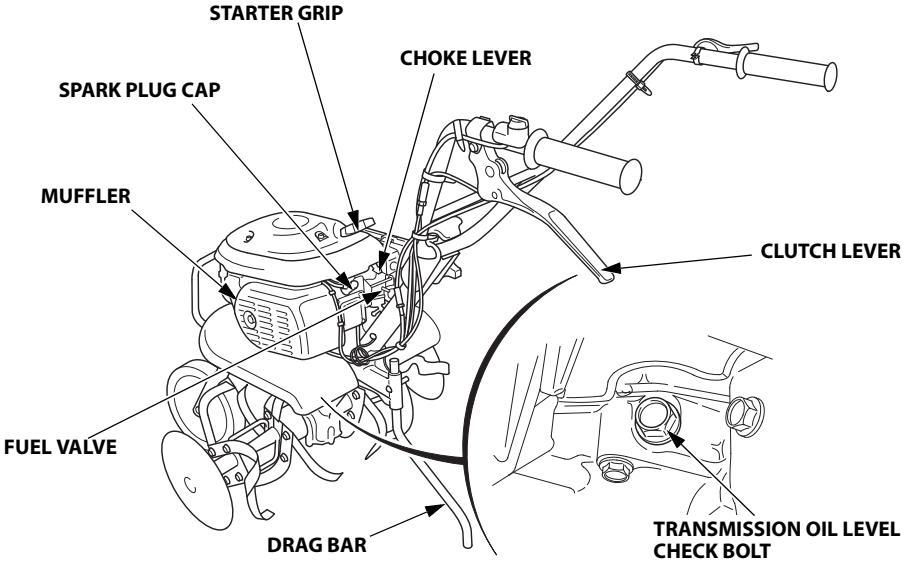

## CONTROLS

### Fuel Valve

The fuel valve opens and closes the connection between the fuel tank and the carburetor.

The fuel valve must be in the ON position for the engine to run.

After stopping the engine, turn the fuel valve to the OFF position.

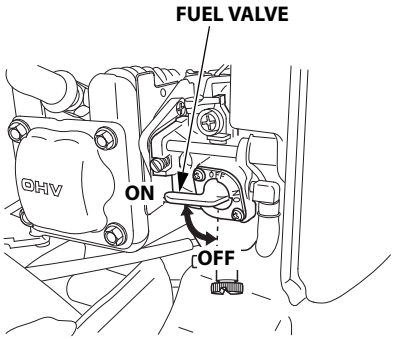


### Choke Lever

The choke lever opens and closes the choke valve in the carburetor.

The CLOSED position enriches the fuel mixture for starting a cold engine.

The OPEN position provides the correct fuel mixture for operation after starting and for restarting a warm engine.

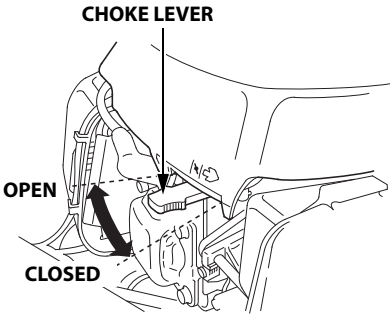


### Engine Switch

The engine switch controls the ignition system.

OFF – Stops the engine.
ON – Running position.

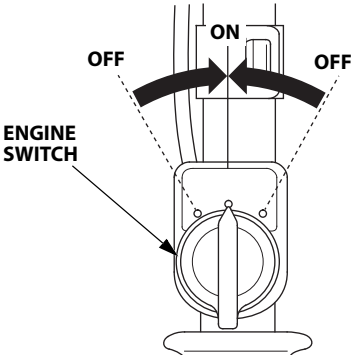

### Starter Grip

Pulling the starter grip operates the recoil starter to crank the engine for starting.

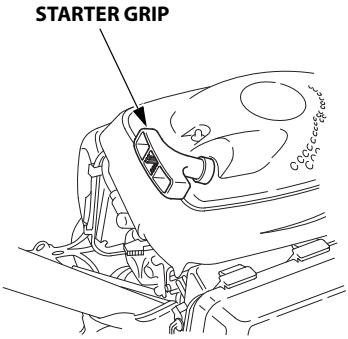


### Throttle Lever

The throttle lever controls engine speed.

Moving the throttle lever in the directions shown makes the engine run faster or slower.

Tine speed is controlled by adjusting the throttle lever. At the maximum throttle position, the tines will rotate at the highest speed.
Moving the throttle lever toward the idle position will decrease the tine speed.

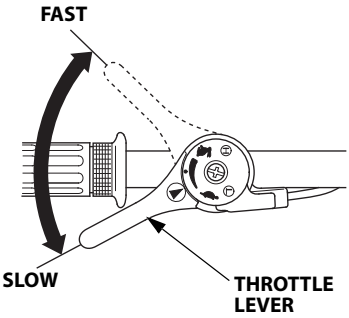


### Handlebar Height Adjuster

Handlebar height can be adjusted to match operator height.
For adjustment, see page 21.

For normal tilling, the most comfortable operator position is with the handlebars at waist height.

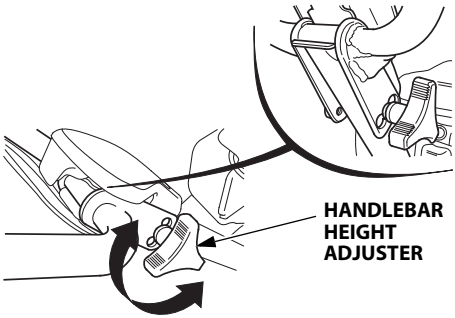

### Clutch Lever

The clutch lever engages and disengages the transmission that drives the tines.
The tiller tines begin to rotate once the engine is started and the clutch lever is squeezed. The tines may momentarily rotate after clutch lever is released.

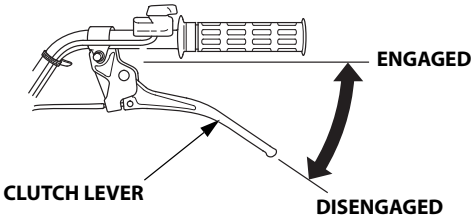


### Drag Bar

The drag bar controls tilling depth and should always be used when tilling. It enables you to compensate for the hardness of the soil. Ideal drag bar height will depend on the type of soil being tilled and soil conditions at the time of tilling. In general, the drag bar should be adjusted so that the tiller is tilted slightly backward.

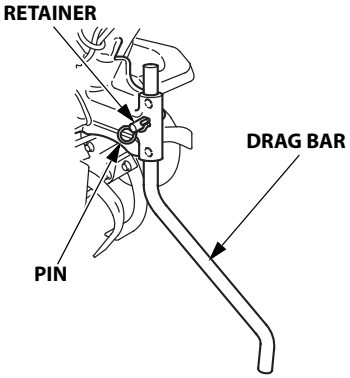


### Front Wheel

The front wheel is used to help move the tiller from one place to another. Lift the tiller by the handlebars to roll the tiller on the front wheel. Pull out on the wheel assembly, move it to the raised position, and then release the wheel assembly before tilling. Always stop the engine before lowering or raising the wheel.

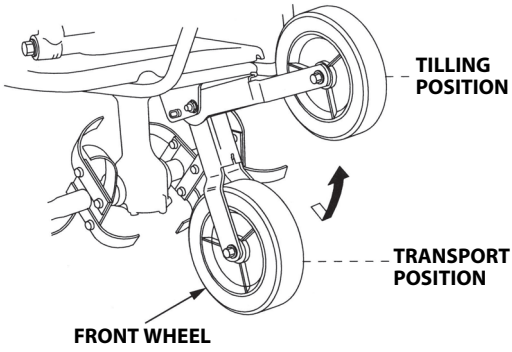

# BEFORE OPERATION

## ARE YOU READY TO GET STARTED?

Your safety is your responsibility. A little time spent in preparation will significantly reduce your risk of injury.

### Knowledge

Read and understand this manual. Know what the controls do and how to operate them.

Familiarize yourself with the tiller and its operation before you begin using it. Know how to quickly disengage the controls and shut off the engine in case of an emergency.

## IS YOUR TILLER READY TO GO?

For your safety, to ensure compliance with environmental regulations, and to maximize the service life of your equipment, it is very important to take a few moments before you operate the tiller to check its condition. Be sure to take care of any problem you find, or have your servicing dealer correct it, before you operate the tiller.

**⚠ WARNING**

Failure to properly maintain this tiller, or failing to correct a problem before operation, could result in a significant malfunction.

Some malfunctions can cause serious injuries or death.

Always perform a pre-operation inspection before each operation and correct any problems.

Do not place flammable objects close to the engine.

Before beginning your pre-operation checks, be sure the tiller is on a level surface and the engine switch is in the OFF position.

**Check the Engine**

- Before each use, look around and underneath the engine for signs of oil or gasoline leaks.
- Check the oil level (see page 30).
- Check the air filter (see page 36). A dirty air filter will restrict air flow to the carburetor, reducing engine and tiller performance.
- Check the fuel level (see page 28). Starting with a full tank will help to eliminate or reduce operating interruptions for refueling.
- Check the transmission oil (see page 33).

**Check the Tiller**

***Tiller outside***

Make sure that there are no flammable materials (dust, straw, etc.) near the engine.

***Clutch lever function***

Check that the lever operates smoothly.

***Wiring and cables***

- Check the insulation of each wire and cable for tears and cuts.
- Check if there is any wire or cable pinched by the neighboring parts.

***Bolts and nuts tightens***

Check for looseness in fastened parts. Securely tighten all loose parts.

***Tines***

Check for excessive wear, damage, or looseness.

***Engine operation***

- Start the engine. Check for abnormal sounds. (See pages 19 through 20 for starting procedure.)
- Check that the engine stops securely by operating the engine switch. (See page 24 for stopping procedure.)
- If you notice any other abnormal symptoms, consult with your authorized Honda dealer promptly.

# OPERATION

## SAFE OPERATING PRECAUTIONS

Before operating the tiller for the first time, please review both the *TILLER SAFETY* chapter (see page 5) and the chapter titled *BEFORE OPERATION* (see page 16).

For your safety, do not start or operate the tiller in an enclosed area such as a garage. Your tiller's exhaust contains poisonous carbon monoxide gas that can collect rapidly in an enclosed area and cause illness or death.

**⚠ WARNING**

Exhaust contains poisonous carbon monoxide gas that can build up to dangerous levels in closed areas.

Breathing carbon monoxide can cause unconsciousness or death.

Never run this product's engine in a closed, or even partly closed area.

**⚠ WARNING**

Tines are sharp and spin fast.

Spinning tines can cut you severely and can amputate body parts.

- Wear protective footwear.
- Keep your hands and feet away from the tines while the engine is running.
- Stop the engine before performing any adjustment, inspection, or maintenance.

## STARTING THE ENGINE

Refer to *Safe Operating Precautions* on page 18.

1. Check that the drain knob is tightened securely.
   Turn the fuel valve to the ON position.

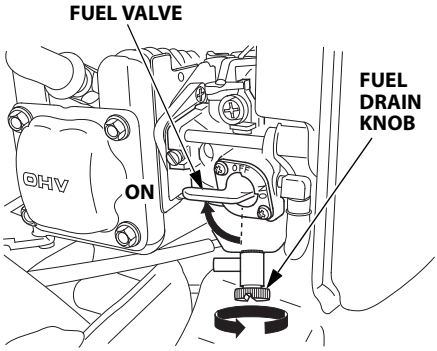


2. Move the choke lever to the CLOSED position to start a cold engine.

   Leave the choke lever in the OPEN position to restart a warm engine.

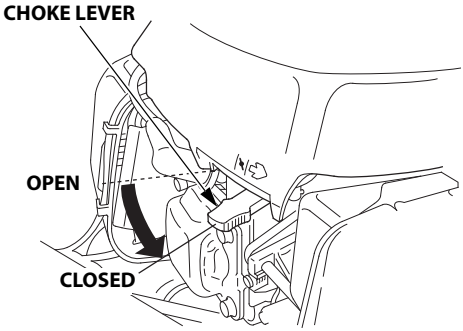


3. Turn the engine switch to the ON position.

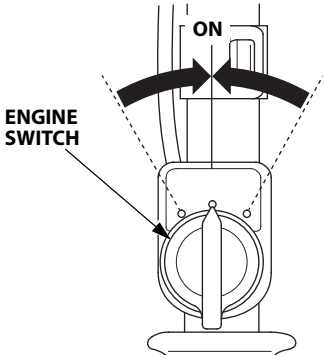

4. Move the throttle lever away from the SLOW position, about 1/3 of the way toward the FAST position.

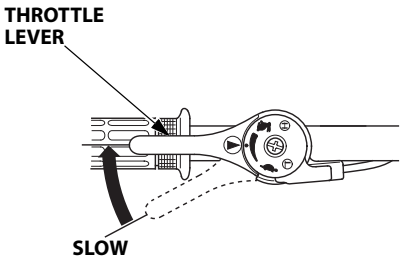


5. Hold the handle and pull the starter grip until you feel resistance, then pull briskly in the direction of the arrow as shown.

**NOTICE**

*Do not allow the starter grip to snap back against the engine.*

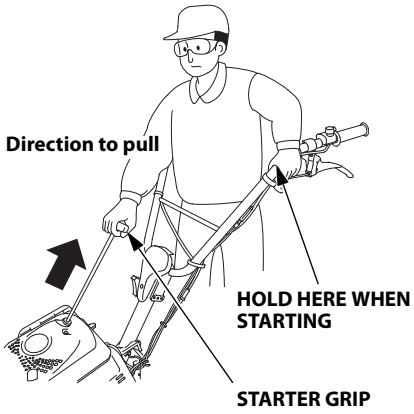


6. If the choke lever was moved to the CLOSED position to start the engine, gradually move it to the OPEN position as the engine warms up.

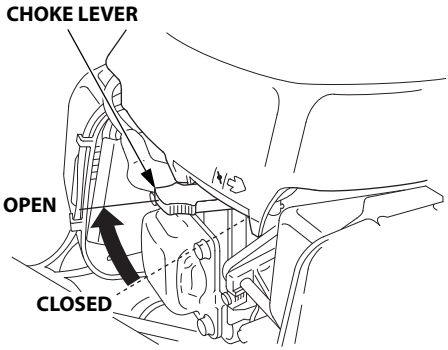

## OPERATING THE CONTROLS FOR TILLING

If the tines dig in but the machine will not move forward, move the handlebars from side to side. When turning, push down on the handlebars to bring the tiller's weight to the rear; this will make turning easier.

### Handlebar Height Adjustment

Stop the engine before adjusting the handlebar height.

To adjust the handlebar height, loosen the handlebar height adjuster, select the appropriate holes, and tighten it.

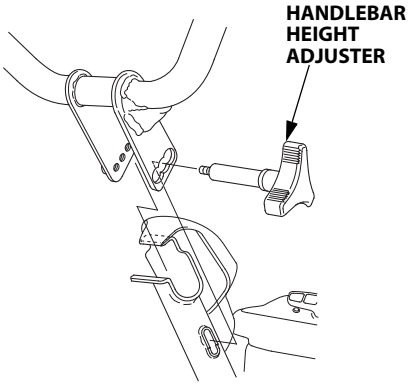


### Clutch

When the clutch lever is squeezed, the clutch is engaged and power is transmitted to the transmission.

When the lever is released, the clutch is disengaged and power is not transmitted.

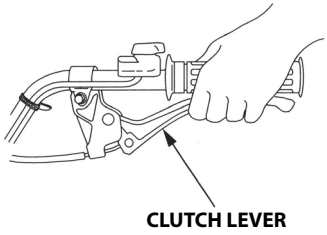

### Tilling Depth Adjustment

The drag bar is used to control the tilling depth, which can be adjusted by removing the pin and retainer and sliding the drag bar up and down as necessary.

During operation, if the machine jerks forward while tilling, press down on the handlebars. This will cause the drag bar to dig more deeply into the soil.

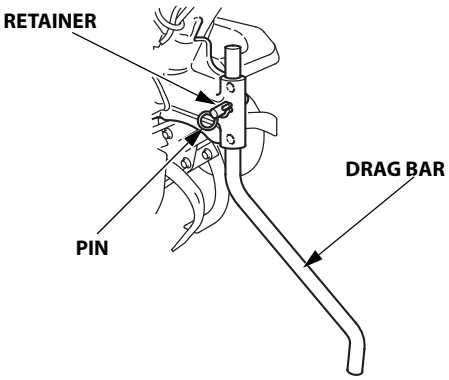


### Front Wheel

After getting to the tilling site, move the front wheel to the raised position before tiling. Always stop the engine before lowering or raising the wheel.

To raise or lower the wheel, pull out the wheel assembly, move the wheel, and then release the wheel assembly.

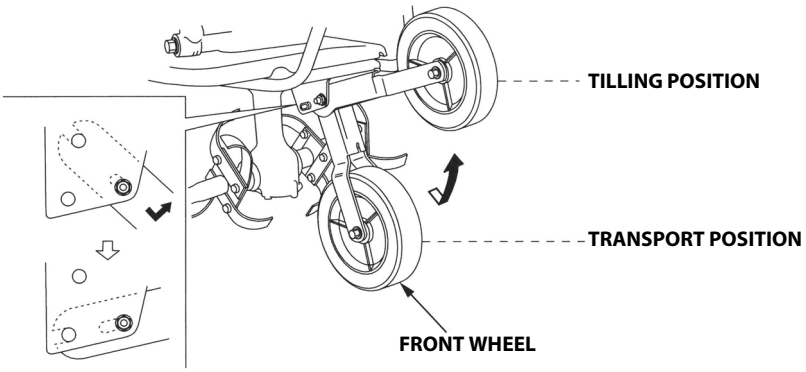

## HANDLING TIPS

- Adjust the handlebar height to a comfortable position (waist height for normal tilling).
- The drag bar should always be used when tilling. It enables you to compensate for the hardness of the soil. The ideal height of the drag bar will depend on the type of soil being tilled and soil conditions at the time of tilling. In general, however, the drag bar should be adjusted so that the tiller is tilted slightly backward.
- If the machine jerks forward while tilling, press down on the handlebars. This will cause the drag bar to dig more deeply into the soil.
- If tines dig in but the machine will not move forward, move the handlebars from side to side.
- Stop the tines before crossing gravel drives, walks, or roads. Stay alert for hidden hazards or traffic.
- Stop the engine immediately if the tiller vibrates abnormally. Check the tiller for damage or loose parts, and repair or replace them before using the tiller again. Vibration is usually a sign of trouble.

### STOPPING THE ENGINE

To stop the engine in an emergency, simply turn the engine switch to the OFF position. Under normal conditions, use the following procedure.

1. Release the clutch lever to the DISENGAGED position.
   Even if you release the clutch, the tine may not stop immediately.

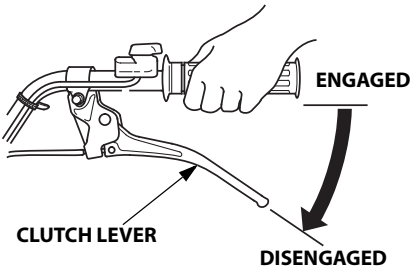


2. Move the throttle lever to the slowest position.

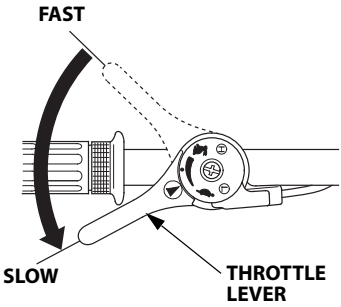


3. Turn the engine switch to the OFF position.

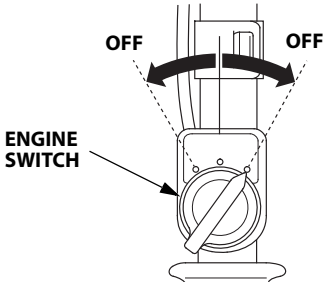


4. Turn the fuel valve to the OFF position.

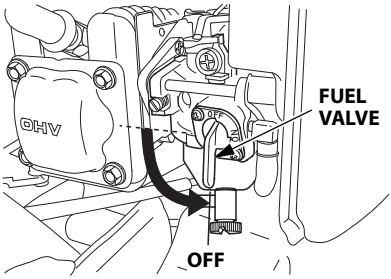

# SERVICING YOUR TILLER

## THE IMPORTANCE OF MAINTENANCE

Good maintenance is essential for safe, economical, and trouble-free operation. It will also help reduce air pollution.

To help you properly care for your tiller, the following pages include a maintenance schedule, routine inspection procedures, and simple maintenance procedures using basic hand tools. Other service tasks that are more difficult, or require special tools, are best handled by professionals and are normally performed by a Honda technician or other qualified mechanic.

The maintenance schedule applies to normal operating conditions. If you operate your tiller under unusual conditions (such as sustained high-load or high-temperature operation, or use in dusty conditions), consult your servicing dealer for recommendations applicable to your individual needs and use.

**⚠ WARNING**

Failure to properly maintain this tiller, or failing to correct a problem before operation, could result in a significant malfunction.

Some malfunctions can cause serious injuries or death.

Always follow the inspection and maintenance recommendations and schedules in this owner's manual.

Remember that an authorized Honda servicing dealer knows your tiller best and is fully equipped to maintain and repair it.

To ensure the best quality and reliability, use only new, Honda Genuine parts or their equivalents for repair and replacement.

**Maintenance, replacement, or repair of the emission control devices and systems may be performed by any engine repair establishment or individual, using parts that are "certified" to EPA standards.**

# SERVICING YOUR TILLER

## MAINTENANCE SAFETY

Some of the most important safety precautions follow. However, we cannot warn you of every conceivable hazard that can arise in performing maintenance.
Only you can decide whether or not you should perform a given task.

**⚠ WARNING**

Improper maintenance can cause an unsafe condition.

Failure to properly follow maintenance instructions and precautions can cause serious injuries or death.

Always follow the procedures and precautions in this owner's manual.

### Safety Precautions

- Make sure the engine is off before you begin any maintenance or repairs. This will eliminate several potential hazards:
  - **Carbon monoxide poisoning from engine exhaust.**
    Be sure there is adequate ventilation whenever you operate the engine.
  - **Burns from hot parts.**
    Let the engine and exhaust system cool before touching.
  - **Injury from moving parts.**
    Do not run the engine unless instructed to do so.
- Read the instructions before you begin, and make sure you have the tools and skills required.
- To reduce the possibility of fire or explosion, be careful when working around gasoline. Use only a nonflammable solvent, not gasoline, to clean parts. Keep cigarettes, sparks, and flames away from all fuel-related parts.
- Disconnect the spark plug cap and wear heavy gloves when working near the tine blades.

## MAINTENANCE SCHEDULE

| REGULAR SERVICE PERIOD (2) Perform at every indicated month or operating hour interval, whichever comes first. / ITEM | | After storage | Each use | First month or 20 hrs. | Every 3 months or 50 hrs. | Every 6 months or 100 hrs. | Every year or 300 hrs. | Refer to page |
|---|---|---|---|---|---|---|---|---|
| Engine oil | Check level | | o | | | | | 30 |
| | Change | o | | o | | o (4) | | 31 |
| Air cleaner | Check | | o | | | | | 36 |
| | Clean | | | | o (1) | | | 37 |
| | Replace | | | | | | o | 36 |
| Tiller outside | Check | | o | | | | | 17 |
| Clutch lever function | Check | | o | | | | | 21 |
| Engine operation | Check | | o | | | | | 19 |
| Wiring and cables | Check | | o | | | | | 17 |
| Bolts and nuts tightens | Check-tightness | | o | | | | | 17 |
| Transmission oil | Check | o | | | | | | 33 |
| Spark plug | Check-adjust | | | | | o | | 38 |
| | Replace | | | | | | o | 38 |
| Spark arrester (optional part) | Clean | | | | | o | | 42 |
| Clutch cable | Check-adjust | | | o | | o | | 40 |
| Throttle cable | Check-adjust | | | | | | o | 41 |
| Idle speed | Check-adjust | | | | | | o (3) | — |
| Clutch shoe | Check | | | | | | o (3) | — |
| Fuel tank and filter | Clean | o (3) | | | | o (3) | | — |
| Valve clearance | Check-adjust | | | | | | o (3) | — |
| Combustion chamber | Clean | After every 300 hrs. (3) | | | | | | — |
| Fuel tube | Check | Every 2 years (Replace if necessary) (3) | | | | | | — |

(1) Service every 10 operating hours or every day when used in dusty areas.
(2) Log hours of operation to determine proper maintenance intervals.
(3) These items should be serviced by your servicing dealer, unless you have the proper tools and are mechanically proficient. Refer to the Honda shop manual for service procedures.
See "Honda Publications" on page 59 for ordering information.
(4) Change engine oil every 50 hours when used under heavy load or in high ambient temperatures.

Failure to follow this maintenance schedule could result in non-warrantable failures.

### REFUELING

With the engine stopped and on a level surface, remove the fuel tank cap and check the fuel level. Refill the tank if the fuel level is low.

**⚠ WARNING**

Gasoline is highly flammable and explosive.

You can be burned or seriously injured when handling fuel.

- Stop the engine and let it cool before handling fuel.
- Keep heat, sparks, and flame away.
- Handle fuel only outdoors.
- Keep away from your vehicle.
- Wipe up spills immediately.

**NOTICE**

*Fuel can damage paint and plastic. Be careful not to spill fuel when filling your fuel tank. Damage caused by spilled fuel is not covered under the Distributor's Limited Warranty (U.S.) / Distributor's Warranty (CA.).*

Refuel in a well-ventilated area before starting the engine. If the engine has been running, allow it to cool. Refuel carefully to avoid spilling fuel.
Do not fill the fuel tank above the upper limit line (see page 29).
Never refuel the engine inside a building where gasoline fumes may reach flames or sparks. Keep gasoline away from appliance pilot lights, barbecues, electric appliances, power tools, etc.
Spilled fuel is not only a fire hazard, it causes environmental damage.
Wipe up spills immediately. If fuel is spilled on clothing, change clothing immediately.
If fuel is spilled, do not attempt to start the engine but move the machine away from the area of spillage and avoid creating any source of ignition until fuel vapors have dissipated.

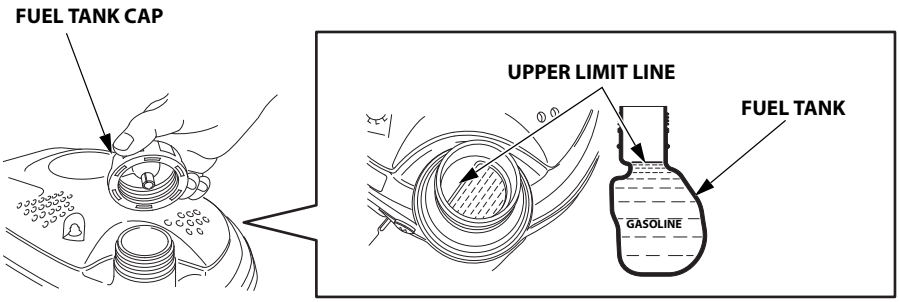


After refueling, tighten the fuel tank cap securely.

**FUEL RECOMMENDATIONS**

This engine is certified to operate on unleaded gasoline with a pump octane rating of 86 or higher.

Never use gasoline that is stale, contaminated, or mixed with oil.
Avoid getting dirt or water in the fuel tank.

You may use regular unleaded gasoline containing no more than 10% ethanol (E10) or 5% methanol by volume. In addition, methanol must contain cosolvents and corrosion inhibitors.

Use of fuels with content of ethanol or methanol greater than shown above may cause starting and/or performance problems. It may also damage metal, rubber, and plastic parts of the fuel system.

Engine damage or performance problems that result from using a fuel with percentages of ethanol or methanol greater than shown above are not covered under the *Distributor's Limited Warranty (U.S.) / Distributor's Warranty (CA.)*.

If your equipment will be used on an infrequent or intermittent basis, please refer to the fuel section of the *STORAGE* chapter (see page 44) for additional information regarding fuel deterioration.

### ENGINE OIL LEVEL CHECK

Check the engine oil level with the engine stopped and in a level position. Make sure the area around the oil filler cap is clean.

1. Remove the oil filler cap.
2. Check the oil level. If it is below the upper limit, fill with the recommended oil (see page 32) to the upper limit.
3. Reinstall the oil filler cap securely.

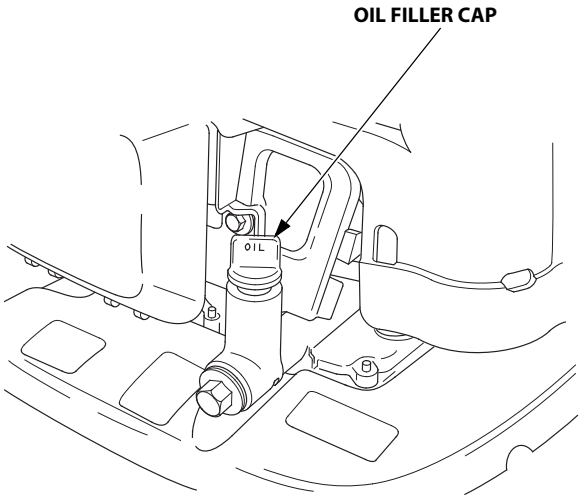


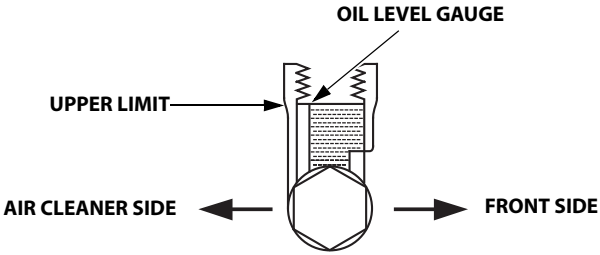

## ENGINE OIL CHANGE

Drain the oil while the engine is warm to assure rapid and complete draining.
Make sure the area around the drain plug and the oil filler cap are clean.

1. Place a suitable container below the engine to catch the used oil, and then remove the oil filler cap, drain plug, and sealing washer.

2. Allow the used oil to drain completely, and then reinstall the drain plug with a new sealing washer. Tighten the plug securely.

   **TORQUE:** 54 N·m (5.5 kgf·m, 40 lbf·ft)

   **NOTICE**

   *Improper disposal of engine oil can be harmful to the environment. If you change your own oil, please dispose of the used oil properly. Put it in a sealed container and take it to a recycling center. Do not throw it in the trash, pour it on the ground, or pour it down a drain.*

3. With the tiller in a level position, fill with the recommended oil (see page 32) to the upper limit of the level gauge.

   **Maximum oil capacity:** 10 US oz (0.30 L, 10.6 Imp oz)

   **NOTICE**

   *Running the engine with a low oil level can cause engine damage. This type of damage is not covered under the Distributor's Limited Warranty (U.S.) / Distributor's Warranty (CA.).*

4. Reinstall the oil filler cap securely.

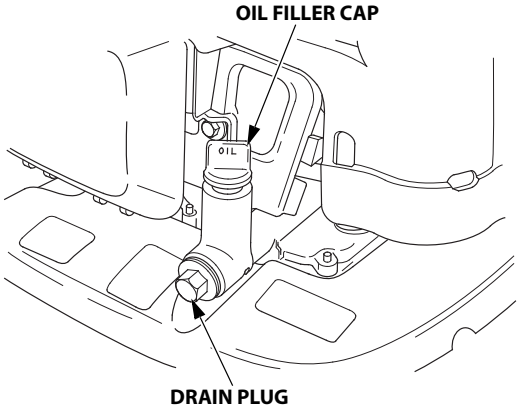


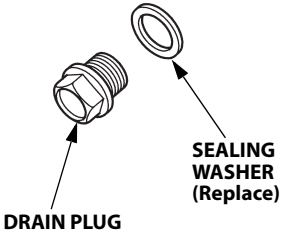


Wash your hands with soap and water after handling used oil.

### ENGINE OIL RECOMMENDATIONS

Oil is a major factor affecting performance and service life. Use 4-stroke automotive detergent oil.

SAE 10W-30 is recommended for general use. Other viscosities shown in the chart may be used when the average temperature in your area is within the recommended range.

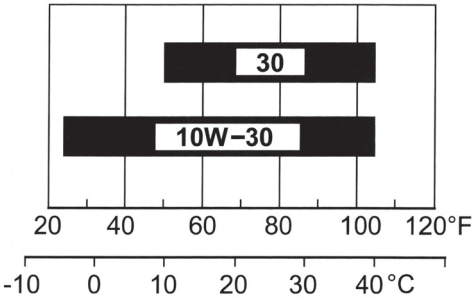


**AMBIENT TEMPERATURE**

The SAE oil viscosity and service category are in the API label on the oil container. Honda recommends that you use API SERVICE category SJ or later (or equivalent) oil.

**TRANSMISSION OIL LEVEL CHECK (USA model)**

Check the transmission oil level with the tiller on a level surface and the engine stopped.
Make sure the area around the oil level check bolt is clean.

1. Remove the transmission oil level check bolt and sealing washer. Check the oil level. The oil should be level with the lower edge of the oil filler hole.

   If the transmission oil level is low, add the recommended oil by the following procedure.

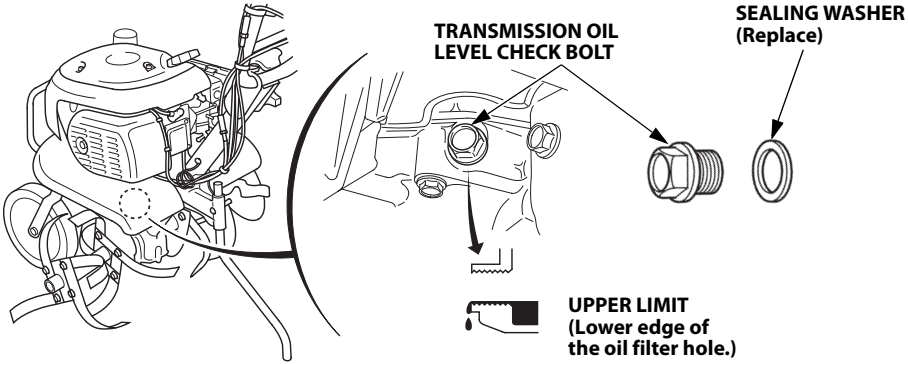


Disassembly
2. Move the choke lever to the CLOSED position.

   **NOTICE**

   *If you try to remove the fan cover with the choke lever in the OPEN position, the choke rod may not come out of the choke rod hole, and the choke mechanism may be damaged.*

3. Remove the recoil cover cap nuts and remove the recoil cover.
4. Remove the fuel tank cap, neck seal, and fan cover. Carefully remove the choke rod from the choke valve hole as shown.

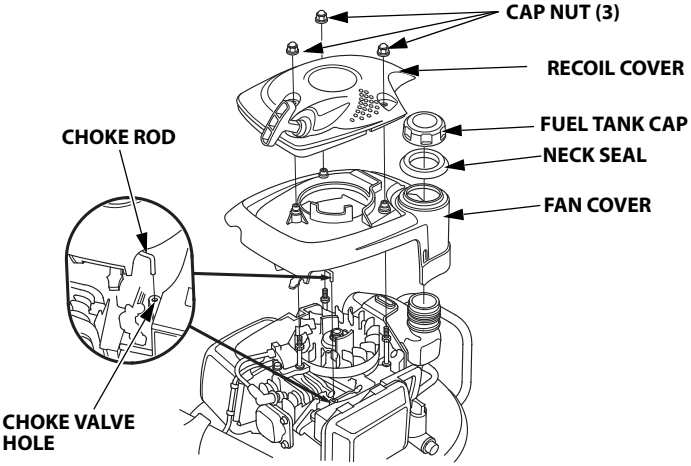


5. Reinstall the fuel tank cap to prevent foreign objects from entering the fuel tank.
6. Make sure the area around the oil filler cap is clean. Remove the transmission oil filler cap and add the recommended oil to the upper limit (see page 33).

   **Maximum oil capacity:** 0.95 US qt (0.9 L)

   **Recommended oil:**
   API SERVICE category SL or later (or equivalent), SAE 0W-20

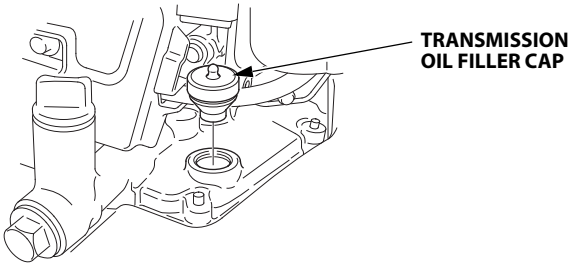


7. Reinstall the oil filler cap. Reinstall the oil level check bolt and a new sealing washer, and tighten the bolt securely.

   **TORQUE:** 39 N·m (4.0 kgf·m, 29 lbf·ft)

Wash your hands with soap and water after handing used oil.

Assembly

8. Remove the fuel tank cap. Verify the choke lever is in the CLOSED position and reinstall the fan cover by inserting the choke rod into the choke valve hole.
   - The choke lever will not operate if the choke rod is not inserted correctly into the choke valve hole as shown below.

9. Reinstall the neck seal and fuel tank cap as shown.

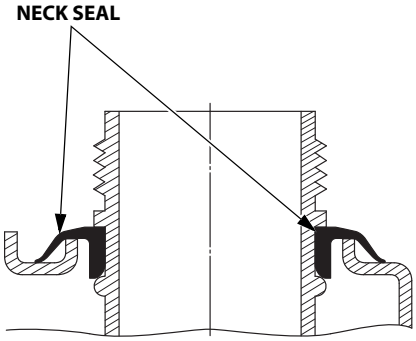


10. Reinstall the recoil cover, and tighten the recoil cover cap nuts securely.

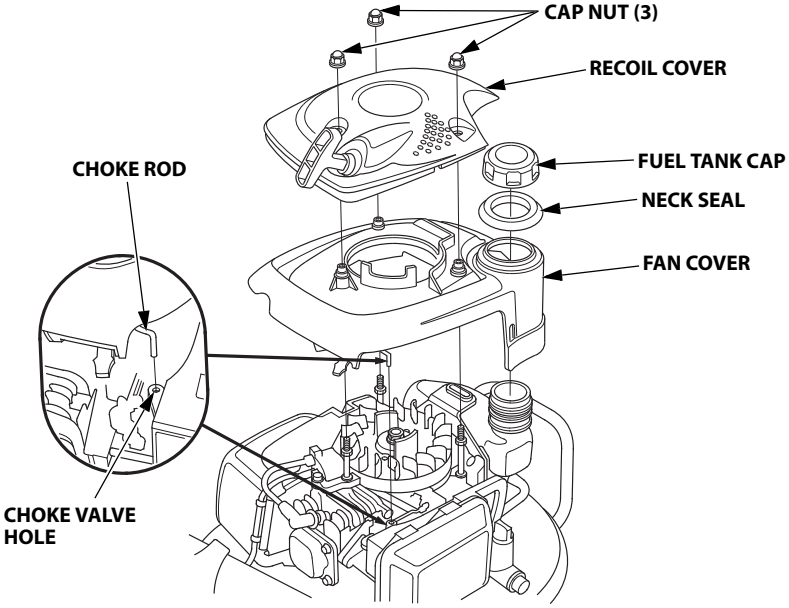

### AIR FILTER INSPECTION

Press the latch tabs on the fuel tank side of the air cleaner cover, remove the air cleaner cover, and remove the filter.
Check the filter to be sure it is clean and in good condition. If the filter is dirty, remove the filter and clean it as described on page 37. Replace the filter if it is heavily clogged or damaged.
Reinstall the filter and air cleaner cover. Make sure the latch tabs are secured.

**NOTICE**

*Operating the engine without an air filter, or with a damaged air filter, will allow dirt to enter the engine, causing rapid engine wear. This type of damage is not covered by the Distributor's Limited Warranty (U.S.) / Distributor's Warranty (CA.).*

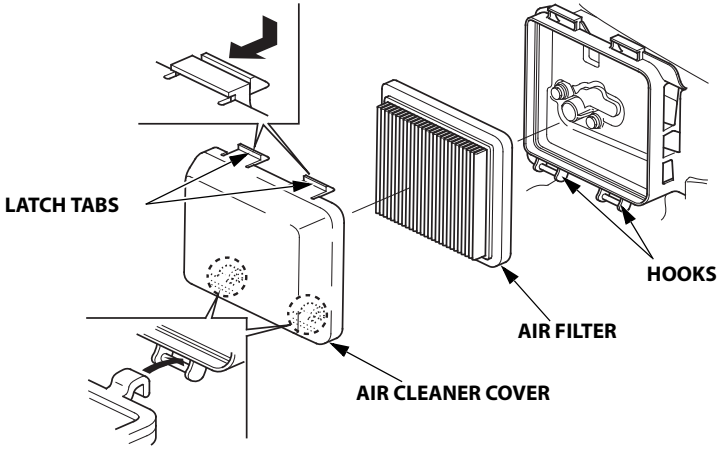

### AIR FILTER CLEANING

A dirty air filter will restrict air flow to the carburetor, reducing engine performance. If you operate the tiller in very dusty areas, clean the air filter more frequently than specified in the *Maintenance Schedule*.

1. Tap the air filter element several times on a hard surface to remove dirt, or blow compressed air [not exceeding 207 kPa (2.1 kgf/cm$^2$, 30 psi)] through the air filter from the air cleaner housing side. Never try to brush off dirt; brushing will force dirt into the fibers. Replace the air filter if it is excessively dirty.

2. Wipe dirt from the air cleaner housing and cover using a moist rag. Be careful to prevent dirt from entering the air duct that leads to the carburetor.

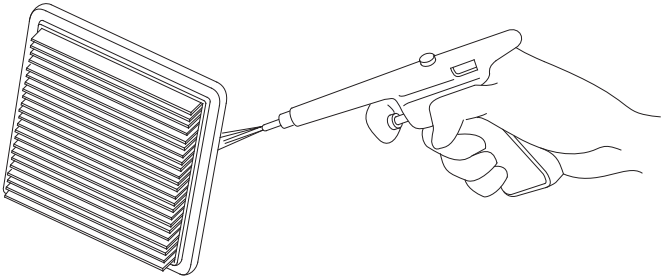

### SPARK PLUG SERVICE

**Recommended spark plug:** U14FSR-UB (DENSO)

NOTICE

*An incorrect spark plugs can cause engine damage.*

For good performance, the spark plug must be properly gapped and free of deposits.

Allow the engine to cool before servicing the spark plug.

1. Disconnect the spark plug cap, and remove any dirt from around the spark plug area.
2. Remove the spark plug with a spark plug wrench.

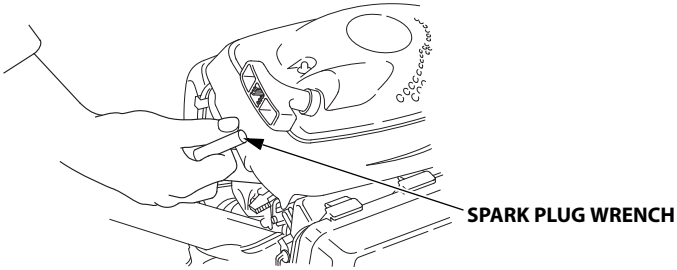

3. Inspect the spark plug. Replace it if the electrodes are worn or the insulator is cracked, chipped, or fouled.

4. Measure the spark plug electrode gap with a wire-type feeler gauge. Correct the gap, if necessary, by carefully bending the side electrode.

   **The gap should be:**
   0.024 – 0.028 in (0.6 – 0.7 mm)

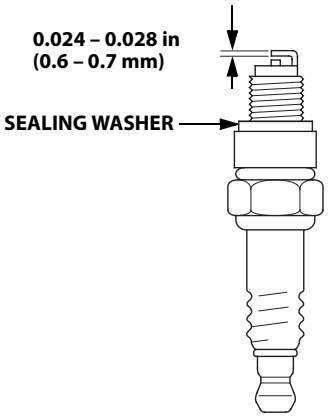


5. Install the spark plug carefully, by hand, to avoid cross-threading.

6. After the spark plug seats, tighten with a spark plug wrench to compress the washer.

   If reinstalling a used spark plug, tighten 1/8 – 1/4 turn after the spark plug seats.

   If installing a new spark plug, tighten 1/2 turn after the spark plug seats.

   **TORQUE:** 11.8 N·m (1.2 kgf·m, 8.7 lbf·ft)

   **NOTICE**

   *A loose spark plug can overheat and damage the engine.*
   *Overtightening the spark plug can damage the threads in the cylinder head.*

7. Attach the spark plug cap.

## CLUTCH CABLE ADJUSTMENT

1. Set the handlebar height in the center position (see page 21).
2. Measure the spring lengths when the clutch lever is operated to the DISENGAGED and ENGAGED positions.
3. With the clutch lever ENGAGED, adjust so that the extension value of the clutch spring is as measured below.

   **Extension value:**
   **A (ENGAGED) - a (DISENGAGED) = 0.08 ± 0.02 in (2 ± 0.5 mm)**

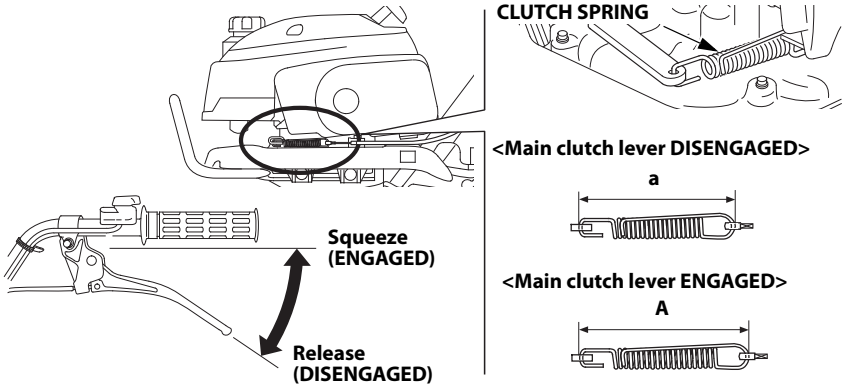


4. Loosen the lock nut and turn the adjusting nut to obtain the correct extension value of the clutch spring. After adjustment, tighten the lock nut securely.

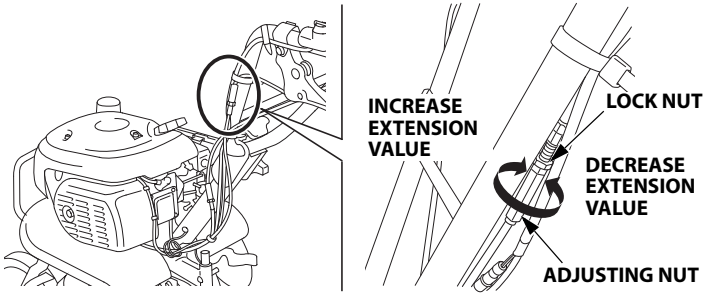

### THROTTLE CABLE ADJUSTMENT

Measure the free play at the lever tip.

**Free play:** 0.39 – 0.59 in (10.0 – 15.0 mm)

If the free play is incorrect, loosen the lock nut and turn the adjusting nut in or out as required.
After adjustment, tighten the lock nut.

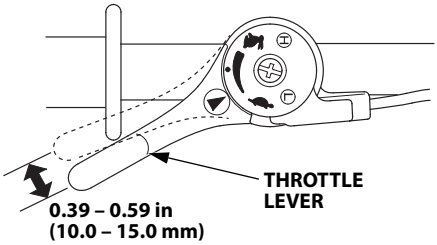


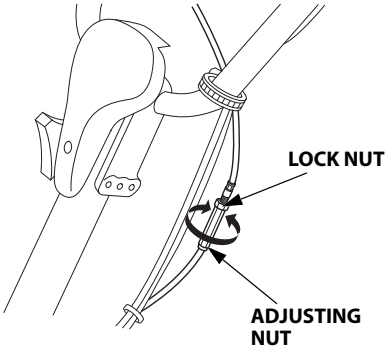

### SPARK ARRESTER SERVICE (optional part)

Your engine is not factory-equipped with a spark arrester. In some areas, it is illegal to operate an engine without a spark arrester. Check local laws and regulations. A spark arrester is available from authorized Honda servicing dealers.

The spark arrester must be serviced every 100 hours to keep it functioning as designed.

If the engine has been running, the muffler will be very hot. Allow the muffler to cool before servicing the spark arrester.

1. Remove the three 5 mm bolts from the muffler protector, and remove the muffler protector.

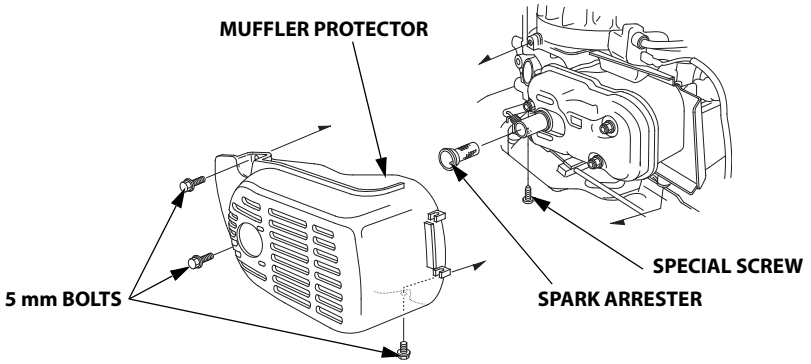


2. Remove the special screw from the spark arrester, and remove the spark arrester from the muffler.

3. Use a brush to remove carbon deposits from the spark arrester screen. Be careful to avoid damaging the screen. The spark arrester must be free of breaks and holes. Replace the spark arrester if it is damaged.

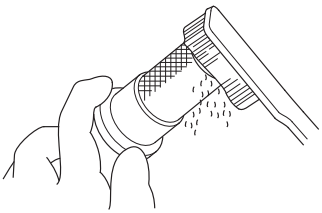

4. Install the spark arrester and muffler protector in the reverse order of disassembly.

# STORAGE

## STORAGE PREPARATION

Proper storage preparation is essential for keeping your tiller trouble free and looking good. The following steps will help to keep rust and corrosion from impairing your tiller's function and appearance, and will make the engine easier to start when you use the tiller again.

### Cleaning

1. Wash the tiller, including the underside.

#### Engine

Wash the engine by hand, and be careful to prevent water from entering the air cleaner.

**NOTICE**

- *Using a garden hose or pressure washing equipment can force water into the air cleaner. Water in the air cleaner will soak the filter element and can enter the carburetor or engine cylinder, causing damage.*
- *Water contacting a hot engine can cause damage. If the engine has been running, allow it to cool for at least half an hour before washing.*

#### Tiller

If using a garden hose or pressure washing equipment to clean the tiller, be careful to avoid getting water on the belts.

**NOTICE**

*Spraying water on hot tine shaft bearings can cause them to be damaged from cooling too quickly.*

2. After washing the tiller, wipe dry all accessible surfaces.

3. Start the engine outdoors, and let it run until it reaches normal operating temperature to evaporate any water remaining on the engine.

4. While the engine is running, operate the clutch lever to expel water from the pulleys, belts, and other moving items.

5. Stop the engine and allow it to cool.

6. After the tiller is clean and dry, touch up any damaged paint and coat other areas with a light film of oil. Lubricate the throttle cable core with a silicone spray lubricant.

**Fuel**

NOTICE

*Depending on the region where you operate your equipment, fuel formulations may deteriorate and oxidize rapidly. Fuel deterioration and oxidation can occur in as little as 30 days and may cause damage to the carburetor and/or fuel system. Please check with your servicing dealer for local storage recommendations.*

Gasoline will oxidize and deteriorate in storage. Old gasoline will cause hard starting, and it leaves gum deposits that clog the fuel system. If the gasoline in your tiller deteriorates during storage, you may need to have the carburetor and other fuel system components serviced or replaced.

The length of time that gasoline can be left in your fuel tank and carburetor without causing functional problems will vary with such factors as gasoline blend, your storage temperatures, and whether the fuel tank is partially or completely filled. The air in a partially filled fuel tank promotes fuel deterioration. Very warm storage temperatures accelerate fuel deterioration. Fuel deterioration problems may occur within a few months, or even less if the gasoline was not fresh when you filled the fuel tank.

The *Distributor's Limited Warranty (U.S.) / Distributor's Warranty (CA.)* does not cover fuel system damage or engine performance problems resulting from neglected storage preparation.

You can extend fuel storage life by adding a gasoline stabilizer that is formulated for that purpose, or you can avoid fuel deterioration problems by draining the fuel tank and carburetor.

***Adding a Gasoline Stabilizer to Extend Fuel Storage Life***

When adding a gasoline stabilizer, fill the fuel tank with fresh gasoline. If only partially filled, air in the tank will promote fuel deterioration during storage. If you keep a container of gasoline for refueling, be sure that it contains only fresh gasoline.

1. Add gasoline stabilizer following manufacturer's instructions.
2. After adding a gasoline stabilizer, run the engine outdoors for 10 minutes to be sure that treated gasoline has replaced the untreated gasoline in the carburetor.
3. Stop the engine, and turn the fuel valve to the OFF position.

### *Draining the Fuel Tank and Carburetor*

1. Place an approved gasoline container below the carburetor, and use a funnel to avoid spilling fuel.

2. Loosen the carburetor drain knob, and then move the fuel valve to the ON position.

**⚠ WARNING**

Gasoline is highly flammable and explosive.

You can be burned or seriously injured when handling fuel.

- Stop the engine and let it cool before handling fuel.
- Keep heat, sparks, and flame away.
- Handle fuel only outdoors.
- Keep away from your vehicle.
- Wipe up spills immediately.

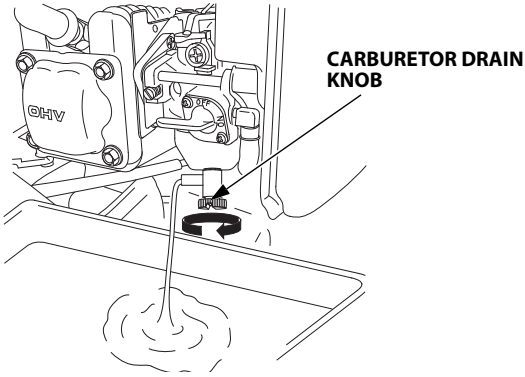


3. After all the fuel has drained into the container, tighten the drain knob securely.

**Engine Oil**

Change the engine oil (see page 31).

**Engine Cylinder**

1. Remove the spark plug (see page 38).
2. Pour a teaspoon (5 cc) of clean engine oil into the cylinder.
3. Gently pull the starter grip several times to distribute the oil in the cylinder.
4. Reinstall the spark plug and spark plug cap.
5. Pull the starter grip slowly until you feel resistance, and then return the starter grip gently. This will close the valves so moisture cannot enter the engine cylinder.

# STORAGE

## STORAGE PRECAUTIONS

Follow Honda's recommendations for safe storage of your tiller.
If your tiller will be stored with gasoline in the fuel tank and carburetor, it is important to reduce the hazard of gasoline vapor ignition. Select a well ventilated storage area away from any appliance that operates with a flame, such as a furnace, water heater, or clothes dryer. Also avoid any area with a spark-producing electric motor, or where power tools are operated.

If possible, avoid storage areas with high humidity, because that promotes rust and corrosion.

Unless all fuel has been drained from the fuel tank, leave the fuel valve in the OFF position to reduce the possibility of fuel leakage.

Place the tiller on a level surface. Tilting can cause fuel or oil leakage.

Allow the engine to cool before storing in any enclosure.

With the engine and exhaust system cool, cover the tiller to keep out dust. A hot engine and exhaust system can ignite or melt some materials. Do not use a plastic sheet as a dust cover. A nonporous cover will trap moisture around the tiller, promoting rust and corrosion.

## REMOVAL FROM STORAGE

Check your tiller as described in the *BEFORE OPERATION* chapter of this manual (see page 16).

If the fuel was drained during storage preparation, fill the tank with fresh gasoline. If you keep a container of gasoline for refueling, be sure that it contains only fresh gasoline. Gasoline oxidizes and deteriorates over time, causing hard starting.

If the cylinder was coated with oil during storage preparation, the engine may smoke briefly at start-up. This is normal.

# TRANSPORTING

Follow Honda's recommendations for safe loading, unloading, and transporting your tiller.

**BEFORE LOADING**

If the engine has been running, allow it to cool for at least 15 minutes before loading the tiller on the transport vehicle. A hot engine and exhaust system can burn you and can ignite some materials.

To prevent fuel spillage, drain fuel from the fuel tank (see page 46).

Always turn the engine switch to the OFF position. Make sure to turn the fuel valve OFF.

**LOADING AND UNLOADING**

If a suitable loading ramp is not available, two people should lift the tiller on and off the transport vehicle while holding the tiller level.

Position the tiller so it sits flat on the bed of the transport vehicle. Tie the tiller down with rope or straps. Keep the tie-down rope or straps away from the controls, adjustment levers, cables, and the carburetor.

The handlebar can be folded either front or back so the tiller will take up less space (see page 21).

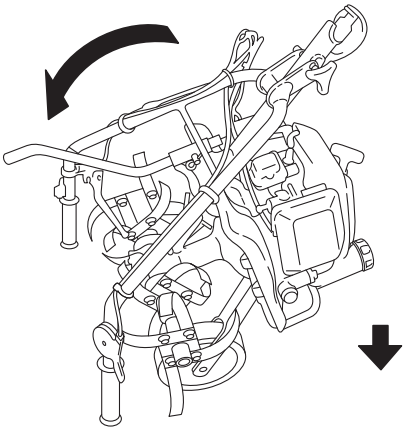

**Fold to the back side.**

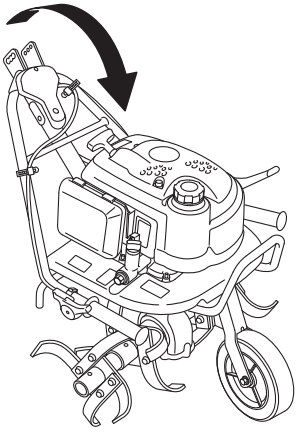

**Fold to the front side.**

# TAKING CARE OF UNEXPECTED PROBLEMS

**ENGINE WILL NOT START**

| Possible Cause | Correction |
|---|---|
| Fuel valve OFF. | Turn valve ON. |
| Choke OPEN. | Move to CLOSE unless engine is warm. |
| Engine switch OFF. | Turn engine switch to ON. |
| Out of fuel. | Refuel (p. 28). |
| Bad fuel, tiller stored without treating or draining gasoline, or refueled with bad gasoline. | Drain fuel tank and carburetor (p. 46). Refuel with fresh gasoline (p. 28). |
| Spark plug faulty, fouled, or improperly gapped. | Gap or replace spark plug (p. 38). |
| Spark plug wet with fuel (flooded engine). | Dry and reinstall spark plug. Start engine with throttle lever in FAST position. |
| Fuel filter clogged, carburetor malfunction, ignition malfunction, valves stuck, etc. | Replace or repair faulty components as necessary. Take tiller to your servicing dealer, or refer to the shop manual. |

### ENGINE LACKS POWER

| Possible Cause | Correction |
|---|---|
| Air filter clogged. | Clean or replace air filter (P. 37). |
| Bad fuel, tiller stored without treating or draining gasoline, or refueled with bad gasoline. | Drain fuel tank and carburetor (p. 46). Refuel with fresh gasoline (p. 28). |
| Fuel filter clogged, carburetor malfunction, ignition malfunction, valves struck, etc. | Replace or repair faulty components as necessary. Take tiller to your servicing dealer, or refer to the shop manual. |

### POOR TILLING QUALITY

| Possible Cause | Correction |
|---|---|
| Engine speed is too slow for soil conditions. | Move the throttle to the FAST position (p. 14). |
| Tiller is moving too fast for soil conditions. | Reduce throttle speed (p. 14). |
| Drag bar adjustment set too high. | Lower drag bar adjustment (p. 22). |
| Tines dull, worn, or damaged. | Replace tines if necessary. |
| Wrong tines installed. | Install correct tines. |
| Tines installed incorrectly. | Install tines correctly. |

# TECHNICAL INFORMATION

**Serial Number Locations**

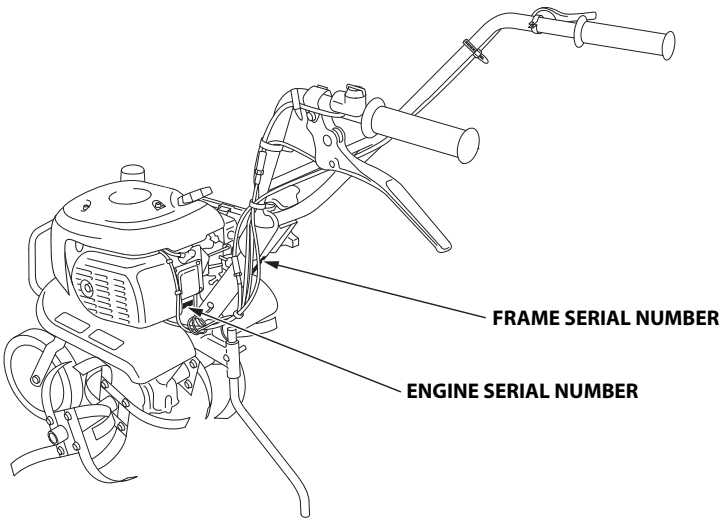


Record the engine and frame serial numbers in the spaces below. You will need these serial numbers when ordering parts, and when making technical or warranty inquiries (see page 60).

Engine serial number:_____

Frame serial number:_____

Date purchased:_____

**Carburetor Modifications for High Altitude Operation**

At high altitude, the standard carburetor air-fuel mixture will be too rich. Performance will decrease, and fuel consumption will increase. A very rich mixture will also foul the spark plug and cause hard starting. Operation at an altitude that differs from that at which this engine was certified, for extended periods of time, may increase emissions.

High altitude performance can be improved by specific modifications to the carburetor. If you always operate your tiller at altitudes above 2,000 feet (610 meters) have your servicing dealer perform this carburetor modification. This engine, when operated at high altitude with the carburetor modifications for high altitude use, will meet each emission standard throughout its useful life.

Even with carburetor modification, engine horsepower will decrease about 3.5% for each 1,000-foot (300-meter) increase in altitude. The effect of altitude on horsepower will be greater than this if no carburetor modification is made.

**NOTICE**

*When the carburetor has been modified for high altitude operation, the air-fuel mixture will be too lean for low altitude use. Operation at altitudes below 2,000 feet (610 meters) with a modified carburetor may cause the engine to overheat and result in serious engine damage. For use at low altitudes, have your servicing dealer return the carburetor to original factory specifications.*

## Emission Control System Information

### *Source of Emissions*

The combustion process produces carbon monoxide, oxides of nitrogen, and hydrocarbons. Control of hydrocarbons and oxides of nitrogen is very important because, under certain conditions, they react to form photochemical smog when subjected to sunlight. Carbon monoxide does not react in the same way, but it is toxic.

Honda utilizes appropriate air/fuel ratios and other emissions control systems to reduce the emissions of carbon monoxide, oxides of nitrogen, and hydrocarbons.

Additionally, Honda fuel systems utilize components and control technologies to reduce evaporative emissions.

### *The U.S. and California Clean Air Acts, and Environment and Climate Change Canada (ECCC)*

U.S. EPA, California and Canadian regulations require all manufacturers to furnish written instructions describing the operation and maintenance of emission control systems.

The following instructions and procedures must be followed in order to keep the emissions from your Honda engine within the emission standards.

### *Tampering and Altering*

**NOTICE**

*Tampering is a violation of Federal and California law.*

Tampering with or altering the emission control system may increase emissions beyond the legal limit. Among those acts that constitute tampering are:

- Removal or alteration of any part of intake, fuel, or exhaust systems.
- Alterations that would cause the engine to operate outside its design parameters.

***Problems That May Affect Emissions***

If you are aware of any of the following symptoms, have your engine inspected and repaired by your authorized Honda Power Equipment dealer.

- Hard starting or stalling after starting.
- Rough idle.
- Misfiring or backfiring under load.
- Afterburning (backfiring).
- Black exhaust smoke or high fuel consumption.

***Replacement Parts***

The emissions control systems on your new Honda engine were designed, built, and certified to conform with EPA, California (models certified for sale in California only), and Canadian emissions regulations. We recommend the use of Honda Genuine parts whenever you have maintenance done. These original-design replacement parts are manufactured to the same standards as the original parts, so you can be confident of their performance.
Honda cannot deny coverage under the emission warranty solely for the use of non-Honda replacement parts or service performed at a location other than an authorized Honda dealership; you may use comparable EPA certified parts, and have service performed at non-Honda locations. However, the use of replacement parts that are not of the original design and quality may impair the effectiveness of your emissions control system.
A manufacturer of an aftermarket part assumes the responsibility that the part will not adversely affect emissions performance. The manufacturer or rebuilder of the part must certify that use of the part will not result in a failure of the engine to comply with emissions regulations.

***Maintenance***

As the power equipment engine owner, you are responsible for completing all required maintenance listed in your owner's manual. Honda recommends that you retain all receipts covering maintenance on your power equipment engine, but Honda cannot deny warranty coverage solely for the lack of receipts or for your failure to ensure that all scheduled maintenance has been completed.

Follow the *MAINTENANCE SCHEDULE* on page 27.
Remember that this schedule is based on the assumption that your Honda engine product will be used for its designed purpose. Sustained high-load or high-temperature operation, or use in dusty conditions, will require more frequent service.

***Air Index***
***(Models certified for sale in California)***

An Air Index Information label is applied to engines certified to an emission durability time period in accordance with the requirements of the California Air Resources Board.

The bar graph is intended to provide you, our customer, the ability to compare the emissions performance of available engines. The lower the Air Index, the less pollution.

The durability description is intended to provide you with information relating to the engine's emission durability period. The descriptive term indicates the useful life period for the engine's emission control system. See your *Emission Control System Warranty* for additional information.

| Descriptive Term | Applicable to Emissions Durability Period |
|---|---|
| Moderate | 50 hours (0 – 80 cc, inclusive)<br>125 hours (greater than 80 cc) |
| Intermediate | 125 hours (0 – 80 cc, inclusive)<br>250 hours (greater than 80 cc) |
| Extended | 300 hours (0 – 80 cc, inclusive)<br>500 hours (greater than 80 cc)<br>1,000 hours (225 cc and greater) |

**Emission Control System Warranty**

Your Honda Power Equipment engine is designed, built, and equipped to meet the U.S. EPA, Environment Canada, and California Air Resources Board (models certified for sale in California only) emission standard for spark ignited engines. American Honda Motor provides the emission warranty coverage for engines in the United States and its territories. Honda Canada provides the emission warranty for engines in the 13 provinces and territories of Canada.

***Warranty Coverage***

Honda Power Equipment engines certified to the U.S. EPA, Environment Canada, and State of California (models certified for sale in California only) emission regulations are covered by this warranty to be free from defects in materials and workmanship that may keep it from meeting the applicable U.S. EPA, CARB and Canadian emissions requirements for a minimum of 2 years or the length of the Honda Power Equipment Distributor's Limited Warranty, whichever is longer, from the original date of delivery to the retail purchaser. This warranty is transferable to each subsequent purchaser for the duration of the warranty period. Warranty repairs will be made without charge for diagnosis, parts, and labor. Information about how to make a warranty claim, as well as a description of how a claim can be made and/or how service can be provided, can be obtained by contacting an authorized Honda Power Equipment dealer or by contacting the following:

American Honda
Email: powerequipmentemissions@ahm.honda.com
Telephone: (888) 888-3139
Honda Canada
Telephone: (888) 946-6329

The covered components include all components whose failure would increase an engine's emissions of any regulated pollutant or evaporative emissions. A list of specific components can be found in the separately included emissions warranty statement.

Specific warranty terms, coverage, limitations, and manner of seeking warranty service are also set forth in the separately included emissions warranty statement. In addition, the emission warranty statement can also be found on the Honda Power equipment website or at the following link: http://powerequipment.honda.com/support/warranty

### Specifications

| Model | F220K1 | |
|---|---|---|
| Type | AT2, ANT type | CT2, CT3 type |
| Description code | FAAJ | |
| Dry mass [weight] | 52.9 lbs (24 kg) | 57.3 lbs (26 kg) |
| Length | 47.2 in (1,200 mm) | |
| Width | 21.5 in (545 mm) | 23.0 in (585 mm) |
| Height | 38.2 in (970 mm) | |
| Engine model | GXV57T | |
| Engine type | Single cylinder, 4-stroke, forced air cooled, overhead valve, gasoline | |
| Displacement | 3.5 cu-in (57.3 $cm^3$) | |
| Bore x Stroke | 1.77 x 1.42 in (45.0 x 36.0 mm) | |
| Ignition system | Transistor magneto | |
| Spark plug | U14FSR-UB (DENSO) | |
| Oil capacity | 10 US oz (0.30 L) | 0.30 L (10.6 Imp oz) |
| Fuel tank capacity | 0.172 US gal (0.65 L) | 0.65 L (0.143 Imp gal) |
| Clutch | Shoe clutch | |
| Transmission oil capacity | 0.95 US qt (0.9 L) | 0.9 L (31.7 Imp oz) |

### Tune-up Specifications

| ITEM | SPECIFICATION | MAINTENANCE |
|---|---|---|
| Spark plug gap | 0.024 – 0.028 in (0.6 – 0.7 mm) | Refer to page 38. |
| Valve clearance | IN:0.08 ± 0.02 mm (cold)<br>EX:0.11 ± 0.02 mm (cold) | See your servicing dealer. |
| Other specification | No other adjustments needed. | |

NOTE: Specifications are subject to change without notice.

# CONSUMER INFORMATION

**Dealer Locator Information**

To find an authorized Honda Servicing Dealer
For USA:
Visit our website: http://powerequipment.honda.com/dealer-locator

For Canada:
Call 1-888-946-6329 or visit our website:
English
http://powerequipment.honda.ca/dealerlocator
French
http://powerequipment.honda.ca/trouver-concessionaire

**Honda Publications**

***Shop Manual***
This manual covers complete maintenance and overhaul procedures.
It is intended to be used by a skilled technician.
For USA:
Available through your Honda dealer or visit
http://powerequipment.honda.com/support/shop-manuals

For Canada:
Contact your dealer for information on the Shop Manual.

***Parts Catalog***
For USA:
This manual provides complete, illustrated parts lists. Available through your Honda dealer.

For Canada:
Contact your dealer for information on parts.

***Accessories Catalog***
Your authorized Honda power equipment dealer offers a selection of accessories (optional equipment) to make your Tiller even more useful.
For USA:
Visit http://powerequipment.honda.com/tillers/accessories
and click on Tillers to see the entire catalog of accessories.

For Canada:
Check with your dealer or visit www.honda.ca and select the Accessories tab under the Tiller segment to view the range of accessories available for your model.

# CONSUMER INFORMATION

**Customer Service Information**

Honda Power Equipment dealership personnel are trained professionals. They should be able to answer any question you may have. If you encounter a problem that your dealer does not solve to your satisfaction, please discuss it with the dealership's management. The Service Manager or General Manager can help. Almost all problems are solved in this way.

If you are dissatisfied with the decision made by the dealership's management, contact the Honda Power Equipment Customer Relations Office. You can write to:

American Honda Motor Co., Inc.
Power Equipment Division
Customer Relations Office
4900 Marconi Drive
Alpharetta, Georgia 30005 – 8847
Telephone: (770) 497 - 6400 M-F,
9:00 am to 7:30 pm ET

In Canada:
Honda Canada, Inc.
Customer Relation Department
180 Honda Boulevard
Markham, Ontario L6C 0H9
Tel: 1-888-946-6329 (Toll free)
Fax: 1-877-939-0909 (Toll free)
E-mail: honda_cr@ch.honda.com

When you write or call, please give us this information:

- Model and serial numbers (see page 52)
- Name of the dealer who sold the Tiller to you
- Name and address of the dealer who services your Tiller
- Date of purchase
- Your name, address, and telephone number
- A detailed description of the problem

# QUICK REFERENCE INFORMATION

| | | |
|---|---|---|
| Fuel | Type | Regular unleaded gasoline with an ethanol content of no more than 10% and a pump octane rating of 86 or higher (see page 29) |
| Engine Oil | Type | SAE 10 W – 30, API SJ or later, for general use (see page 32)<br>Maximum oil capacity:<br>10 US oz (0.30 L, 10.6 Imp oz) |
| Spark Plug | Type | DENSO: U14FSR – UB |
| Maintenance | Before each use, check the following. | Engine oil<br>Air filter<br>Tiller outside<br>Clutch lever function<br>Bolt and nut torque<br>Tines<br>Cables and wires<br>Engine operation |
| | First 20 hours | Change engine oil<br>Clutch cable check and adjust |
| | Subsequent | Refer to maintenance schedule (see page 27) |

HONDA

F220
31V14645
00X31-V14-6450

00X31V14 6450

AH 英 FM
Hi

Printed in Japan