Black Glass Refractory Kit

GL-36M, GL-42M, GL-36MX, GL-42MX

Models: 6K, 8K, 6KL, 8KL, 6KX, 6KX-AU, 8KX, CAL36, CAL42, CAL36X, CAL42X, MER36, MER42, MER36P, MER42P

- Installation Instructions -

Leave this manual with party responsible for use and operation.

DANGER

HOT GLASS WILL CAUSE BURNS.

DO NOT TOUCH GLASS UNTIL COOLED.

NEVER ALLOW CHILDREN TO TOUCH GLASS.

A barrier designed to reduce the risk of burns from the hot viewing glass is provided with this appliance and must be installed for the protection of children and other at-risk individuals.

CAUTION! Do not install damaged components.

CAUTION! Risk of Burns! *Install this refractory only after the appliance has cooled and the gas and electricity have been shut off.*

CAUTION! Risk of Cuts or Abrasions. *Wear protective gloves and safety glasses during installation.*

NOTICE: *Handle refractory panels with care. Refractory may chip or crack if dropped or impacted.*

REQUIRED TOOLS

- Screw gun equipped with 1/4 in (6 mm) socket
- 1/4 in. (6 mm) wrench

KIT COMPONENTS

(1) Glass Refractory Assembly (Back, Left, Right)
(1) Side Refractory Bracket Assembly (See Figure 1)
(1) Back Insulation Board
(2) Side Insulation Board
(1) Back Refractory Support (See Figure 2)
(1) Base Refractory (See Table 1)

GL-36MX & GL-42MX Only:

(1) Top Refractory Panel

SIDE REFRACTORY BRACKET

(Assembly breaks into two pieces)

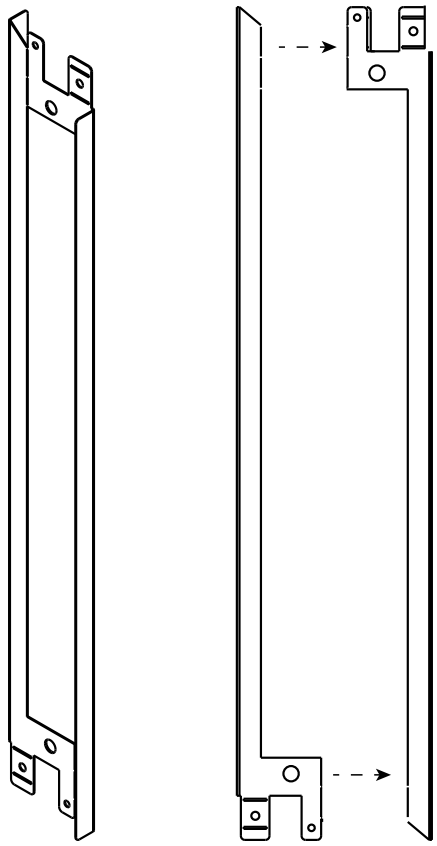

Figure 1 Side Refractory Bracket

Installation Instructions

1. Remove decorative front, appliance glass assembly and logs, if installed.
2. Remove existing refractory, if installed.
3. Locate back refractory support, included in manual bag assembly shipped with the kit. Remove LED covers from refractory support by bending at perforations.

   GL-36MX & GL-42MX Only:
   Retain LED covers for later use.
4. Bend all tabs on back refractory support as shown in Figure 2.

   36 Inch Models Only:
   Bend at perforations and remove.

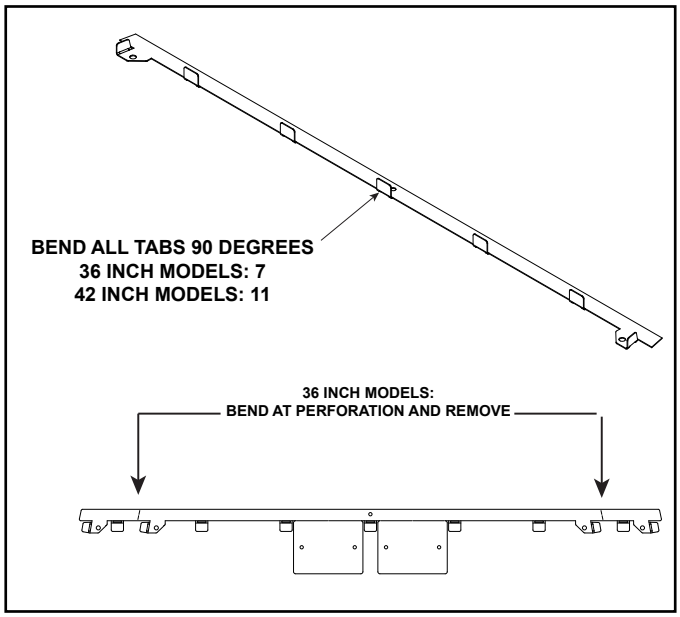

Figure 2 Back Refractory Support

5. Place back refractory support on back air passage return bend, align holes and install with one screw as shown in Figure 3 and Figure 4.

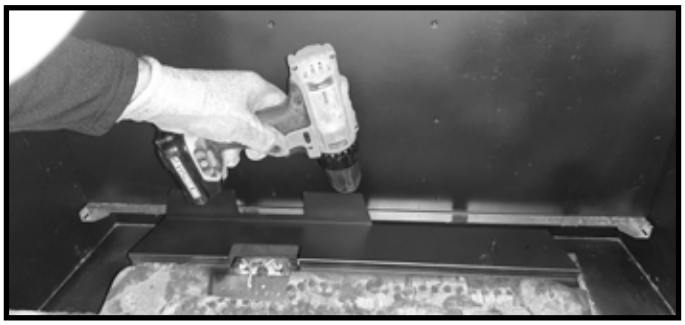

Figure 3 Install Back Refractory Support

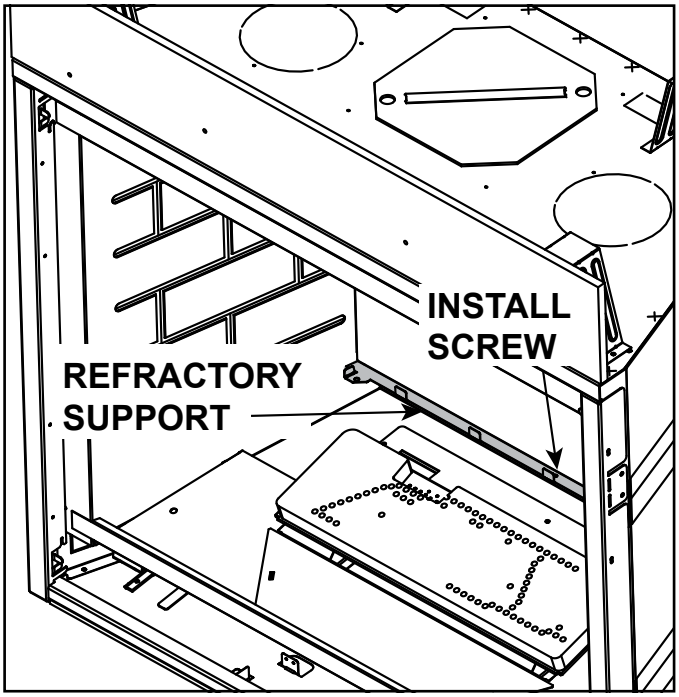

Figure 4 Back Refractory Support Installed

6. **GL-36MX & GL-42MX Only:**

   This step is not applicable for 6KX-AU models.

   Locate the LED lights in the back left and right corners of the firebox and install LED covers. The LED covers prevent reflections from the glass refractory from detracting from the overall viewing experience. Place LED cover over the screws as shown in Figure 5.

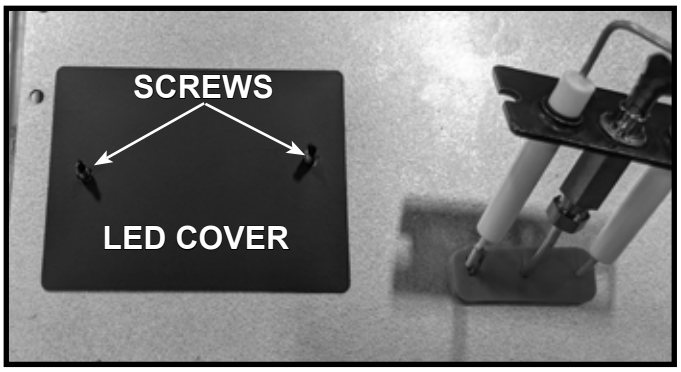

Figure 5 LED Cover Installed (GL-36MX/GL-42MX Only)

7. Install back insulation board by positioning it at the rear of the firebox and behind the refractory support tabs as shown in Figure 6.

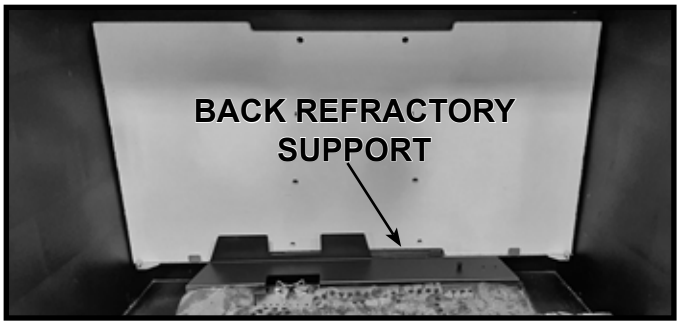

Figure 6 Back Insulation Board Installed

8. Install the back glass panel in front of the insulation board and bend/secure the tabs on the back refractory support.

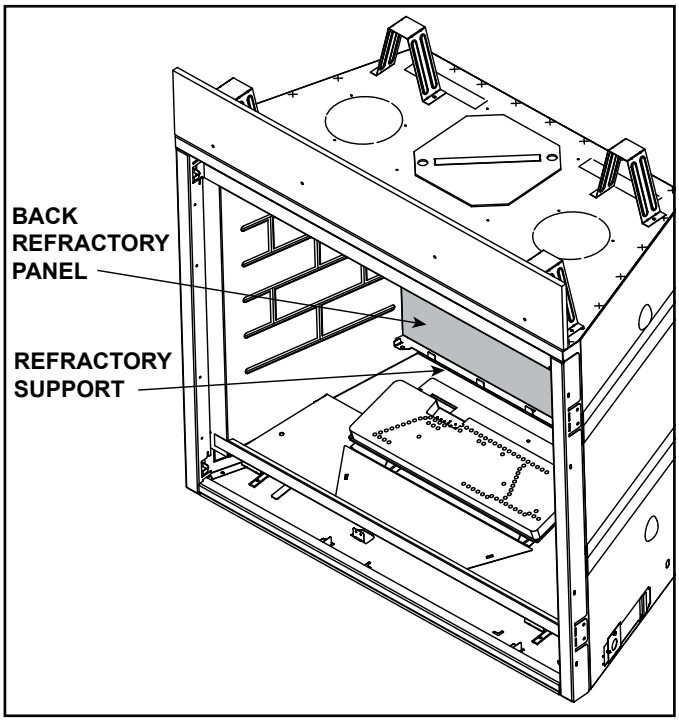

Figure 7 Back Glass Panel Installed

9. Hold rear glass panel in place and slide one side insulation board into position as shown in Figure 8.

Figure 8 Rear Glass Panel and Side Insulation Board Installed

10. Install side glass panel in front of insulation board as shown in Figure 10.

GL-36MX / GL-42MX Only:

11. Bend the side refractory bracket tab down as shown in Figure 11, labeled Bend 1. Place the side refractory bracket into position. Put the top in first and orient it as shown in Figure 10.
12. Install side refractory bracket between the insulation board and the side of the firebox. Position the side refractory bracket, insulation board and side glass panel upright against the inside wall of the firebox as shown in Figure 10. Secure side refractory bracket with one self-tapping screw as shown in Figure 11. Bend side refractory bracket tab over glass panel as shown in Figure 12, labeled Bend 2. Refractory bracket is shown installed, with the tab bent correctly, in Figure 13.

GL-36M / GL-42M Only:

11. Bend the side refractory bracket tab to break it off and discard. See Figure 9. Place the side refractory bracket into position. Put the top in first and orient it as shown in Figure 10.
12. Install side refractory bracket between the insulation board and the side of the firebox. Position the side refractory bracket, insulation board and side glass panel upright against the inside wall of the firebox as shown in Figure 10.

Note: The self-tapping screw, illustrated in Figure 11, is not required for GL-36M / GL-42M models.

All Refractory Kits:

NOTICE: *Refractory bracket is positioned so that the edge of the white insulation board is completely covered.*

NOTICE: *Ensure the side glass and insulation board are positioned flush against the firebox to allow the base refractory to fit properly.*

13. Install side insulation board on opposite side and repeat steps 9-12 for other side.

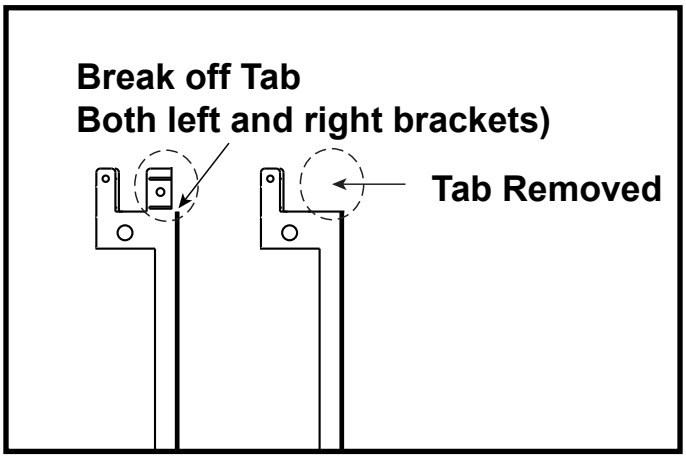

Figure 9 Break Off Tab (GL-36M/GL-42M Only)

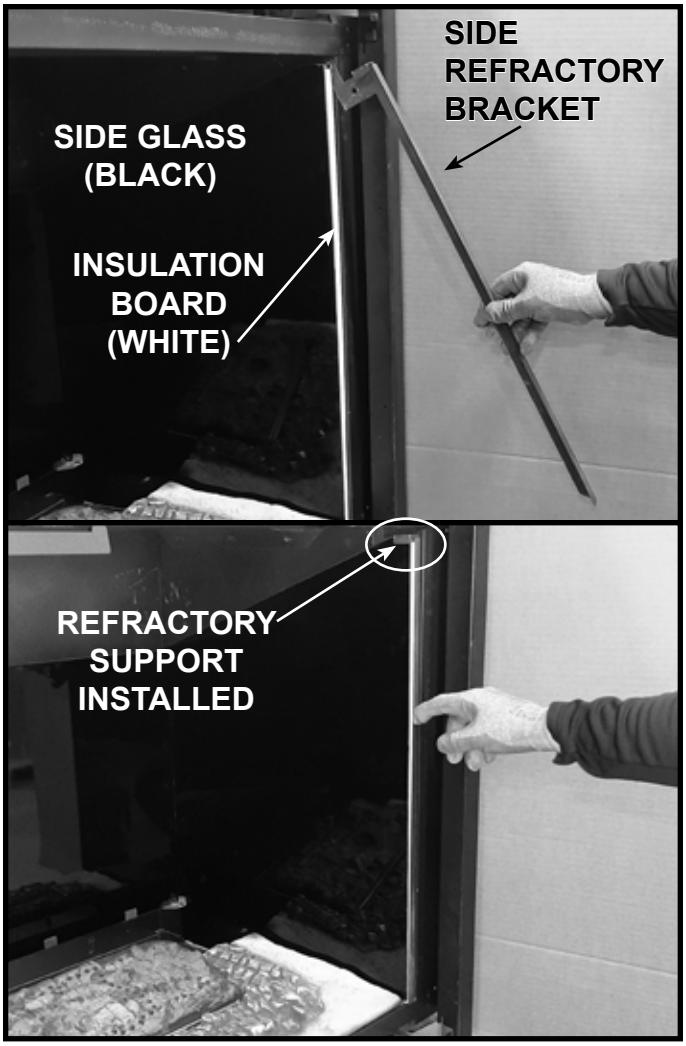

Figure 10 Install Side Refractory Bracket with Side Insulation Board and Side Glass Panel

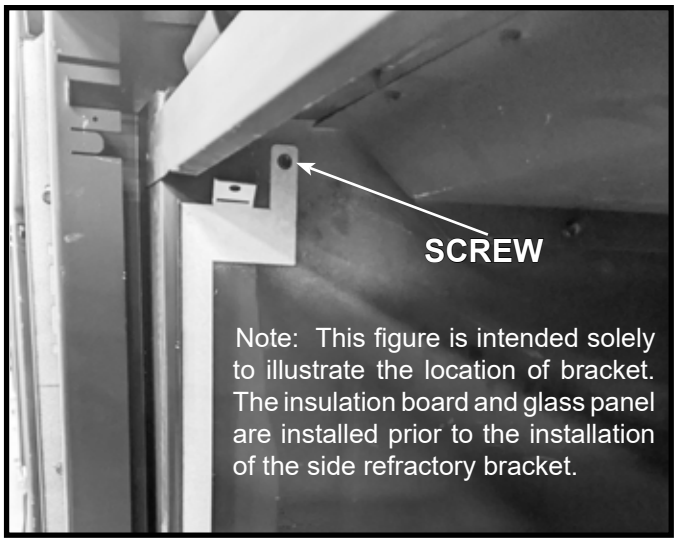

Figure 11 Side Refractory Bracket in Position (GL-36MX / GL-42MX Only)

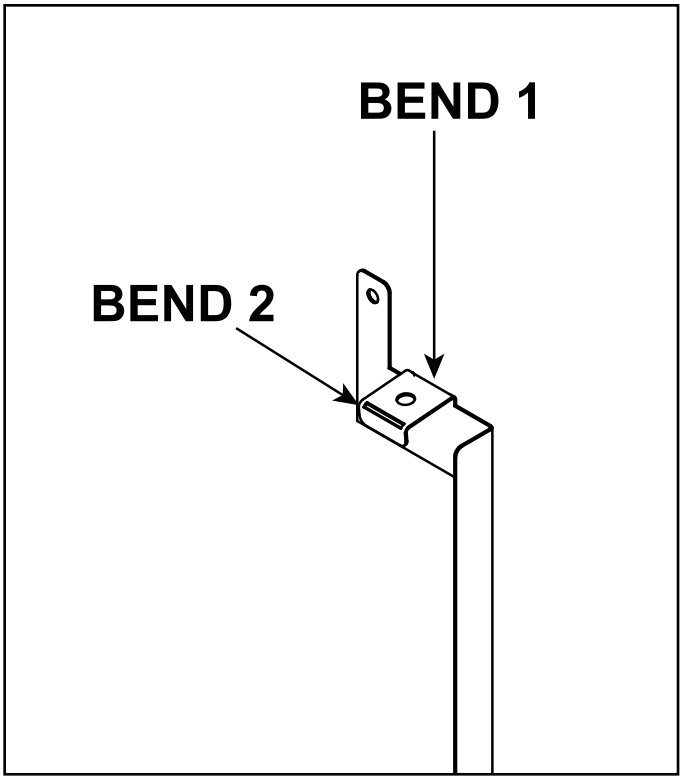

Figure 12 Bend Side Refractory Bracket Tabs (GL-36MX/GL-42MX Only)

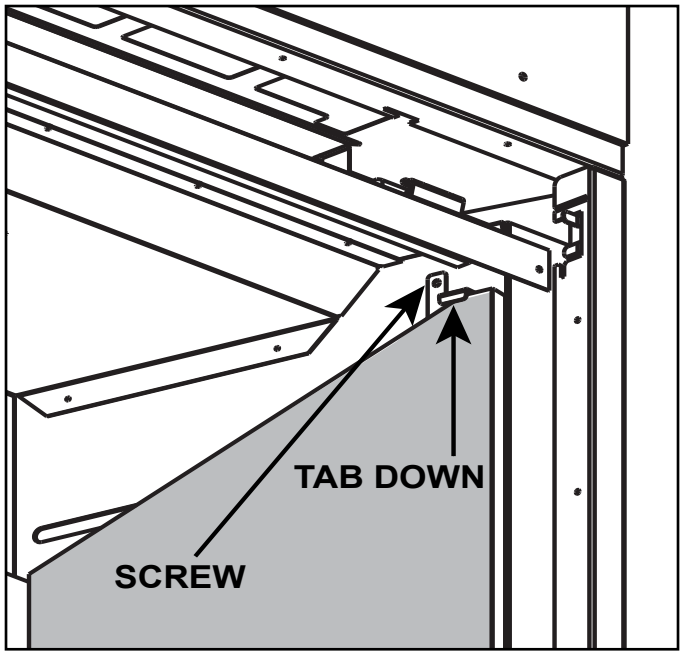

Figure 13 Install Side Glass Refractory Bracket (Tab on GL-36MX/GL-42MX Only)

14. **GL-36MX & GL-42MX Only:**

    Install top refractory panel. Rest it on top of the side glass panels and gently push to the back of firebox until it rests on back refractory panel. See Figure 14.

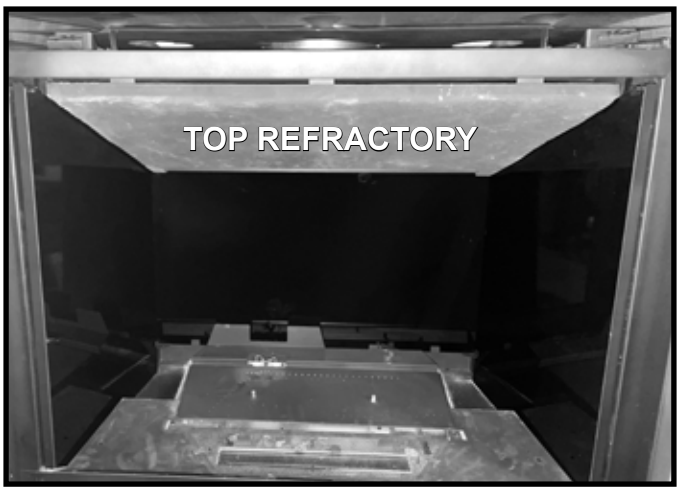

Figure 14 Top Refractory Installed

15. Set new base refractory piece(s) in place as shown in Figure 15 or Figure 16. Refer to Table 1 for type of base refractory per model.

Black Glass Refractory Kit Base Refractory Piece Count			
Refractory Kit	**Appliance Model**	**Type**	**Ref.**
GL-36M	MER36 / CAL36 / 6K	1	Fig.15
GL-42M	MER42 / CAL42 / 8K	1	Fig.15
GL-36MX	CAL36X / 6KL	1	Fig. 15
GL-42MX	CAL42X / 8KL	1	Fig. 15
GL-36MX	MER36P / 6KX / 6KX-AU	2	Fig. 16
GL-42MX	MER42P / 8KX	2	Fig. 16

Table 1 Base Refractory Types

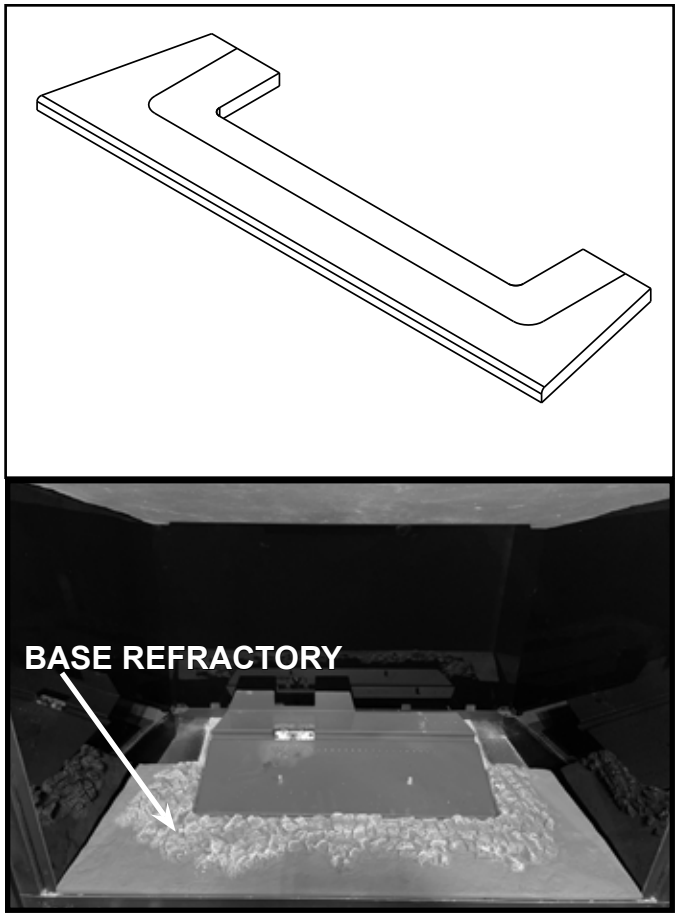

Figure 15 Type 1 Base Refractory Installed (One Piece Model)

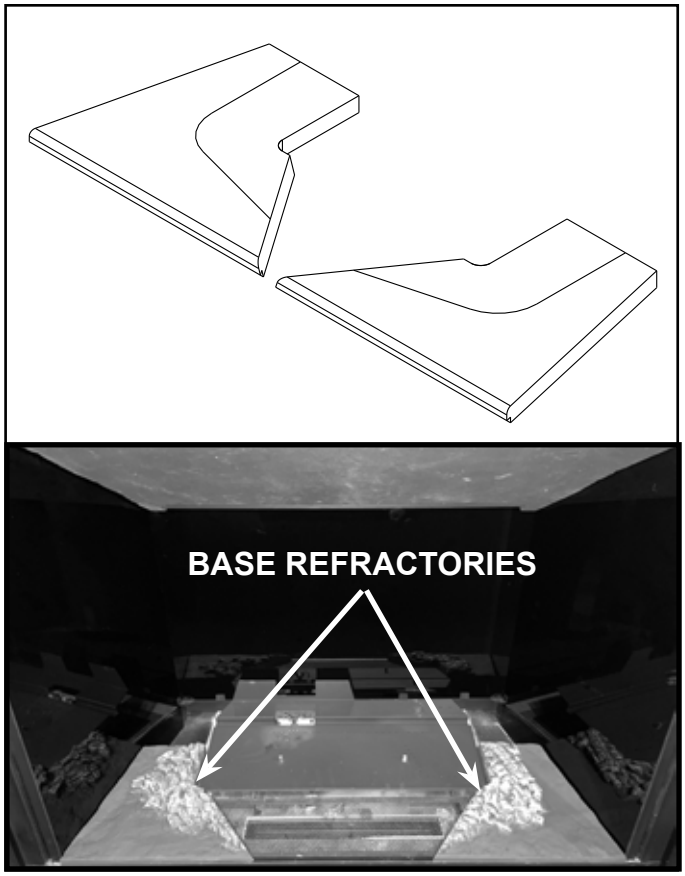

Figure 16 Type 2 Base Refractory Installed (Two Piece Model)

16. Reinstall logs using log placement instructions in appliance installation manual.
17. Reinstall appliance glass assembly using instructions in appliance installation manual.
18. Install decorative front according to instructions included with decorative front.

Please contact your Hearth & Home Technologies dealer with any questions or concerns.
For the location of your nearest Hearth & Home Technologies dealer,
please visit www.hearthnhome.com.

Hearth & Home Technologies
7571 215th Street West, Lakeville, MN 55044
www.hearthnhome.com