WORX®

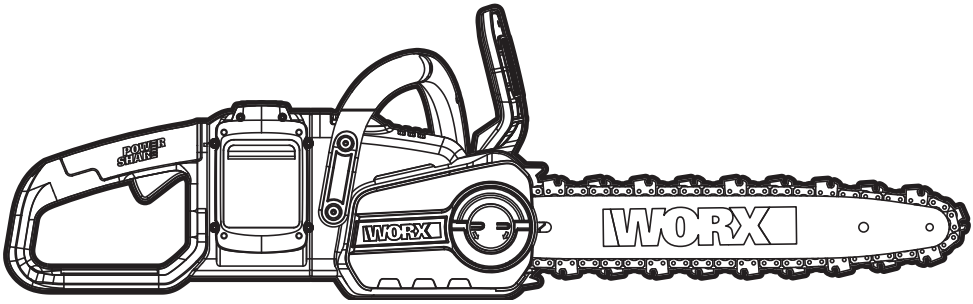

20V MAX
POWER
MODULE

Cordless Chain Saw

	EN	P02
	F	P18
	ES	P31

HELPLINE NUMBER
NUMÉRO DU SERVICE D'ASSISTANCE
NÚMERO DE LÍNEA DE AYUDA
1-866-354-WORX (9679)

WG384 WG384.9

PRODUCT SAFETY

WARNING: Some dust created by power sanding, sawing, grinding, drilling and other construction activities contains chemicals known to the state of California to cause cancer, birth defects or other reproductive harm. Some examples of these chemicals are:

- **Lead from lead-based paints;**
- **Crystalline silica from bricks and cement and other masonry products and**
- **Arsenic and chromium from chemically-treated lumber.**

Your risk from these exposures varies, depending on how often you do this type of work. To reduce your exposure to these chemical:
Work in a well ventilated area, and
Work with approved safety equipment, such as those dust masks that are specially designed to filter out microscopic particles.

WARNING: This product can expose you to chemicals including lead, phthalate or bisphenol A which are known to the State of California to cause cancer, birth defects or other reproductive harm. Wash your hands after use. For more information go to www.P65Warnings.ca.gov.

GENERAL POWER TOOL SAFETY WARNINGS

WARNING: Read all safety warnings and instructions. Failure to follow the warnings and instructions may result in electric shock, fire and/or serious injury.
Save all warnings and instructions for future reference.
The term power tool in the warnings refer to your electric (corded) power tool or battery-operated (cordless) power tool.

1) Work area safety

a) Keep work area clean and well lit. Cluttered or dark areas invite accidents.

b) Do not operate power tools in explosive atmospheres, such as in the presence of flammable liquids, gases or dust. Power tools create sparks which may ignite the dust or fumes.

c) Keep children and bystanders away while operating a power tool. Distractions can cause you to lose control.

2) Electrical safety

a) Power tool plugs must match the outlet. Never modify the plug in any way. Do not use any adapter plugs with grounded power tools. Unmodified plugs and matching outlets will reduce risk of electric shock.

b) Avoid body contact with grounded surfaces such as pipes, radiators, ranges and refrigerators. There is an increased risk of electric shock if your body is grounded.

c) Do not expose power tools to rain or wet conditions. Water entering a power tool will increase the risk of electric shock.

d) Do not abuse the cord. Never use the cord for carrying, pulling or unplugging the power tool. Keep cord away from heat, oil, sharp edges or moving parts. Damaged or entangled cords increase the risk of electric shock.

e) When operating a power tool outdoors, use an extension cord suitable for outdoor use. Use of a cord suitable for outdoor use reduces the risk of electric shock.

f) If operating a power tool in a damp location is unavoidable, use a residual current device (RCD) protected supply. Use of an RCD reduces the risk of electric shock.

3) Personal safety

a) Stay alert, watch what you are doing and use common sense when operating a power tool. Do not use a power tool while you are tired or under the influence of drugs, alcohol or medication. A moment of inattention while operating power tools may result in serious personal injury.

b) Use personal protective equipment. Always wear eye protection. Protective equipment such as dust mask, non-skid safety shoes, hard hat, or hearing protection used for appropriate conditions will reduce personal injuries.

c) Prevent unintentional starting. Ensure the switch is in the off-position before connecting to power source and/or battery pack, picking up or carrying the tool. Carrying power tools with your finger on the switch or energizing power tools that have the switch on invites accidents.

d) Remove any adjusting key or wrench before turning the power tool on. A wrench or a key left attached to a rotating part of the power tool may result in personal injury.

e) Do not overreach. Keep proper footing and balance at all times. This enables better control of the power tool in unexpected situations.

f) Dress properly. Do not wear loose clothing or jewelry. Keep your hair, clothing and gloves away from moving parts. Loose clothes, jewelry or long hair can be caught in moving parts.

g) If devices are provided for the connection of dust extraction and collection facilities, ensure these are connected and properly used. Use of dust collection can reduce dust-related hazards.

4) Power tool use and care

a) Do not force the power tool. Use the correct power tool for your application. The correct power tool will do the job better and safer at

the rate for which it was designed.

b) Do not use the power tool if the switch does not turn it on and off. Any power tool that cannot be controlled with the switch is dangerous and must be repaired.

c) Disconnect the plug from the power source and/or the battery pack from the power tool before making any adjustments, changing accessories, or storing power tools. Such preventive safety measures reduce the risk of starting the power tool accidentally.

d) Store idle power tools out of the reach of children and do not allow persons unfamiliar with the power tool or these instructions to operate the power tool. Power tools are dangerous in the hands of untrained users.

e) Maintain power tools. Check for misalignment or binding of moving parts, breakage of parts and any other condition that may affect the power tools operation. If damaged, have the power tool repaired before use. Many accidents are caused by poorly maintained power tools.

f) Keep cutting tools sharp and clean. Properly maintained cutting tools with sharp cutting edges are less likely to bind and are easier to control.

g) Use the power tool, accessories and tool bits etc., in accordance with these instructions and in the manner intended for the particular type of power tool, taking into account the working conditions and the work to be performed. Use of the power tool for operations different from those intended could result in a hazardous situation.

5) Battery tool use and care

a) Recharge only with the charger specified by the manufacturer. A charger that is suitable for one type of battery pack may create a risk of fire when used with another battery pack.

b) Use power tools only with specifically designated battery packs. Use of any other battery packs may create a risk of injury and fire.

c) When battery pack is not in use, keep it away from other metal objects, like paper clips, coins, keys, nails, screws or other small metal objects, that can make a connection from one terminal to another. Shorting the battery terminals together may cause burns or a fire.

d) Under abusive conditions, liquid may be ejected from the battery; avoid contact. If contact accidentally occurs, flush with water. If liquid contacts eyes, additionally seek medical help. Liquid ejected from the battery may cause irritation or burns.

6) Service

a) Have your power tool serviced by a qualified repair person using only identical replacement parts. This will ensure that the safety of the power tool is maintained.

CHAIN SAW SAFETY WARNINGS

1. Keep all parts of the body away from the saw chain when the chain saw is operating. Before you start the chain saw, make sure the saw chain is not contacting anything. A moment of inattention while operating chain saws may cause entanglement of your clothing or body with the saw chain.

2. Always hold the chain saw with your right hand on the rear handle and your left hand on the front handle. Holding the chain saw with a reversed hand configuration increases the risk of personal injury and should never be done.

3. Hold the power tool by insulated gripping s urfaces only, because the saw chain may contact hidden wiring or its own cord. Saw chains contacting a live wire may make exposed metal parts of the power tool live and could give the operator an electric shock.

4. Wear safety glasses and hearing protection. Further protective equipment for head, hands, legs and feet is recommended. Adequate protective clothing will reduce personal injury by flying debris or accidental contact with the saw chain.

5. Do not operate a chain saw in a tree. Operation of a chain saw while up in a tree may result in personal injury.

6. Always keep proper footing and operate the chain saw only when standing on fixed, secure and level surface. Slippery or unstable surfaces such as ladders may cause a loss of balance or control of the chain saw.

7. When cutting a limb that is under tension be alert for spring back. When the tension in the wood fibers is released the spring loaded limb may strike the operator and/or throw the chain saw out of control.

8. Use extreme caution when cutting brush and saplings. The slender material may catch the saw chain and be whipped toward you or pull you off balance.

9. Carry the chain saw by the front handle with the chain saw switched off and away from your body. When transporting or storing the chain saw always apply the guide bar cover. Proper handling of the chain saw will reduce the likelihood of accidental contact with the moving saw chain.

10. Follow instructions for lubricating, chain tensioning and changing accessories. Improperly tensioned or lubricated chain may either break or increase the chance for kickback.

11. Keep handles dry, clean, and free from oil and grease. Greasy, oily handles are slippery causing loss of control.

12. Cut wood only. Do not use chain saw for purposes not intended. For example: do not use chain saw for cutting plastic, masonry or non-wood building materials. Use of the chain saw for operations different than intended could result in a hazardous situation.

CAUSES AND OPERATOR PREVENTION OF KICKBACK:

Kickback may occur when the nose or tip of the guide bar touches an object, or when the wood closes in and pinches the saw chain in the cut.

Tip contact in some cases may cause a sudden reverse reaction, kicking the guide bar up and back towards the operator.

Pinching the saw chain along the top of the guide bar may push the guide bar rapidly back towards the operator.

Either of these reactions may cause you to lose control of the saw which could result in serious personal injury. Do not rely exclusively upon the safety devices built into your saw. As a chain saw user, you should take several steps to keep your cutting jobs free from accident or injury.

Kickback is the result of tool misuse and/or incorrect operating procedures or conditions and can be avoided by taking proper precautions as given below:

- **Maintain a firm grip, with thumbs and fingers encircling the chain saw handles, with both hands on the saw and position your body and arm to allow you to resist kickback forces.** Kickback forces can be controlled by the operator, if proper precautions are taken. Do not let go of the chain saw.
- **Do not overreach and do not cut above shoulder height.** This helps prevent unintended tip contact and enables better control of the chain saw in unexpected situations.
- **Only use replacement bars and chains specified by the manufacturer.** Incorrect replacement bars and chains may cause chain breakage and/or kickback.
- **Follow the manufacturer's sharpening and maintenance instructions for the saw chain.** Decreasing the depth gauge height can lead to increased kickback.

SAFETY WARNINGS FOR BATTERY PACK

a) Do not dismantle, open or shred cells or battery pack.
b) Do not expose battery pack to heat or fire. Avoid storage in direct sunlight.
c) Do not short-circuit a battery pack. Do not store battery packs haphazardly in a box or drawer where they may short-circuit each other or be short-circuited by conductive materials. When battery pack is not in use, keep it away from other metal objects, like paper clips, coins, keys, nails, screws or other small metal objects, that can make a connection from one terminal to another. Shorting the battery terminals together may cause burns or a fire.
d) Do not remove battery pack from its original packaging until required for use.
e) Do not subject battery pack to mechanical shock.
f) In the event of battery leaking, do not allow the liquid to come into contact with the skin or eyes. If contact has been made, wash the affected area with copious amounts of water and seek medical advice.
g) Observe the plus (+) and minus (–) marks on the battery back and equipment and ensure correct use.
h) Do not use any battery pack which is not designed for use with the equipment.
i) Keep battery pack out of the reach of children.
j) Seek medical advice immediately if a cell or battery pack has been swallowed.
k) Always purchase the battery pack recommended by the device manufacturer for the equipment.
l) Keep battery pack clean and dry.
m) Wipe the battery pack terminals with a clean dry cloth if they become dirty.
n) Battery pack needs to be charged before use. Always use the correct charger and refer to the manufacturer's instructions or equipment manual for proper charging instructions.
o) Do not leave battery pack on prolonged charge when not in use.
p) After extended periods of storage, it may be necessary to charge and discharge the battery pack several times to obtain maximum performance.
q) Battery pack gives its best performance when it is operated at normal room temperature (20 °C ± 5 °C).
r) When disposing of battery packs, keep battery packs of different electrochemical systems separate from each other.
s) Recharge only with the charger specified by WORX. Do not use any charger other than that specifically provided for use with the equipment. A charger that is suitable for one type of battery pack may create a risk of fire when used with another battery pack.
t) Retain the original product literature for future reference.
u) Use only the battery pack in the application for which it was intended.
v) Remove the battery from the equipment when not in use.
w) Dispose of properly.

SAVE THESE INSTRUCTIONS

Instructions concerning the proper techniques for basic felling, limbing, and cross-cutting

1. Felling a tree

When bucking and felling operations are being performed by two or more persons at the same time, the felling operations should be separated from the bucking operation by a distance of at least twice the height of the tree being felled. Trees should not be felled in a manner that would endanger any person,

strike any utility line or cause any property damage. If the tree does make contact with any utility line, the company should be notified immediately.
The chain saw operator should keep on the uphill side of the terrain as the tree is likely to roll or slide downhill after it is felled.
An escape path should be planned and cleared as necessary before cuts are started. The escape path should extend back and diagonally to the rear of the expected line of fall as illustrated in Figure 1.
Before felling is started, consider the natural lean of the tree, the location of larger branches and the wind direction to judge which way the tree will fall.
Remove dirt, stones, loose bark, nails, staples and wire from the tree.

2. Notching undercut
Make the notch 1/3 the diameter of the tree, perpendicular to the direction of falls as illustrated in Figure 2. Make the lower horizontal notching cut (W) first. This will help to avoid pinching either the saw chain or the guide bar when the second notch (X) is being made.

3. Felling back cut
Make the felling back cut (Y) at least 2" higher than the horizontal notching cut as illustrated in Figure 2. Keep the felling back cut parallel to the horizontal notching cut. Make the felling back cut so enough wood is left to act as a hinge. The hinge wood keeps the tree from twisting and falling in the wrong direction. Do not cut through the hinge.
As the felling gets close to the hinge, the tree should begin to fall. If there is any chance that the tree may not fall in desired direction or it may rock back and bind the saw chain, stop cutting before the felling back cut is complete and use wedges of wood, plastic or aluminium (Z) to open the cut and drop the tree along the desired line of fall (③).
When the tree begins to fall remove the chain saw from the cut, stop the motor, put the chain saw down, then use the retreat path planned (②). Be alert for overhead limbs falling and watch your footing. (See Fig.1)

Fig.1

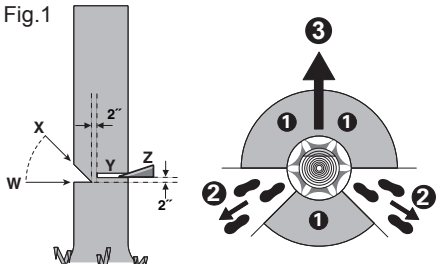

4. Limbing a tree
Limbing is removing the branches from a fallen tree. When limbing leave larger lower limbs to support the log off the ground. Remove the small limbs in one cut as illustrated in Figure 3. Branches under tension should be cut from the bottom up to avoid binding the chain saw.

Fig.2

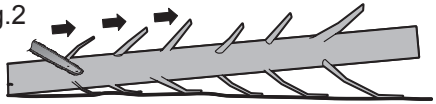

5. Bucking a log
Bucking is cutting a log into lengths. It is important to make sure your footing is firm and your weight is evenly distributed on both feet. When possible, the log should be raised and supported by the use of limbs, logs or chocks. Follow the simple directions for easy cutting. When the log is supported along its entire length as illustrated in Figure 3, it is cut from the top (overbuck), avoid contacting ground as this will greatly reduce the chain sharpness.

Fig.3

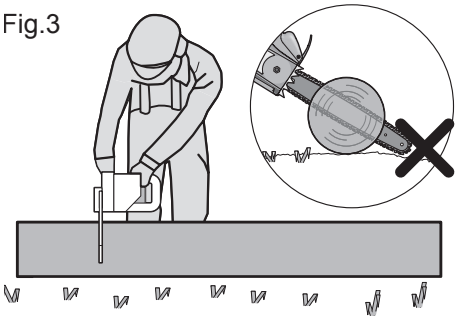

When the log is supported on one end, as illustrated in Figure 5, cut 1/3 the diameter from the underside (underbuck) (1). Then make the finished cut by overbucking (2) to meet the first cut.

Fig.4

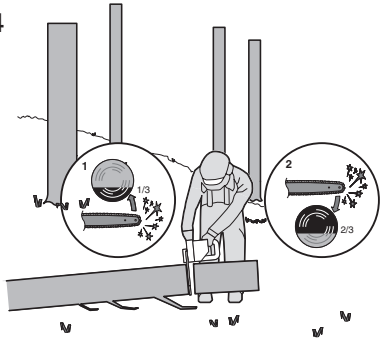

When the log is supported on both ends, as illustrated in Figure 6, cut 1/3 the diameter from the top (overbuck) (1). Then make the finished cut by underbucking (2) the lower 2/3 to meet the first cut.

Fig.5

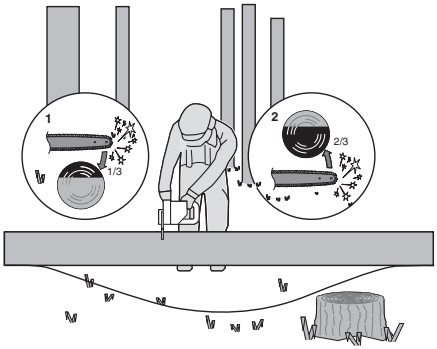

When bucking on a slope always stand on the uphill side of the log, as illustrated in Figure 6. When "cutting through", to maintain complete control release the cutting pressure near the end of the cut without relaxing your grip on the chain saw handles. Don't let the chain contact the ground. After completing the cut, wait for the saw chain to stop before you move the chain saw. Always stop the motor before moving from tree to tree.

Fig.6

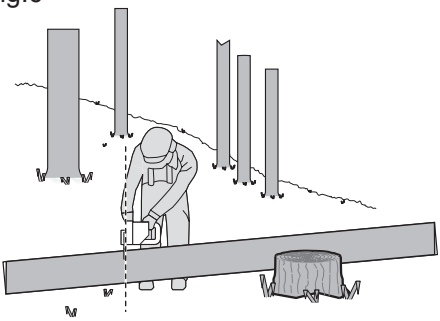

SYMBOLS

	To reduce the risk of injury, user must read instruction manual
	WARNING
	Wear ear protection
	Wear eye protection
	Wear dust mask
	Do not expose to rain
	Wear head protection
	Wear protective gloves
	Protective footwear
	Do not burn
	Do not expose to rain or water
 Li-Ion	Li-Ion battery, battery must be recycled
	Contact of the guide bar tip with any object should be avoided
	Tip contact can cause the guide bar to move suddenly upward and backward, which can cause serious injury
	Always use two hands when operating the chain saw
	call2recycle® POSITEC Inc. has established a partnership with the RBRC Corporation to recycle any Positec batteries with the RBRC-call2recycle seal. For environmental protection, please do not discard batteries in the trash. After the batteries' life cycle is ended, then please call 1-800-822-8837 for a free service that will properly dispose of the battery.

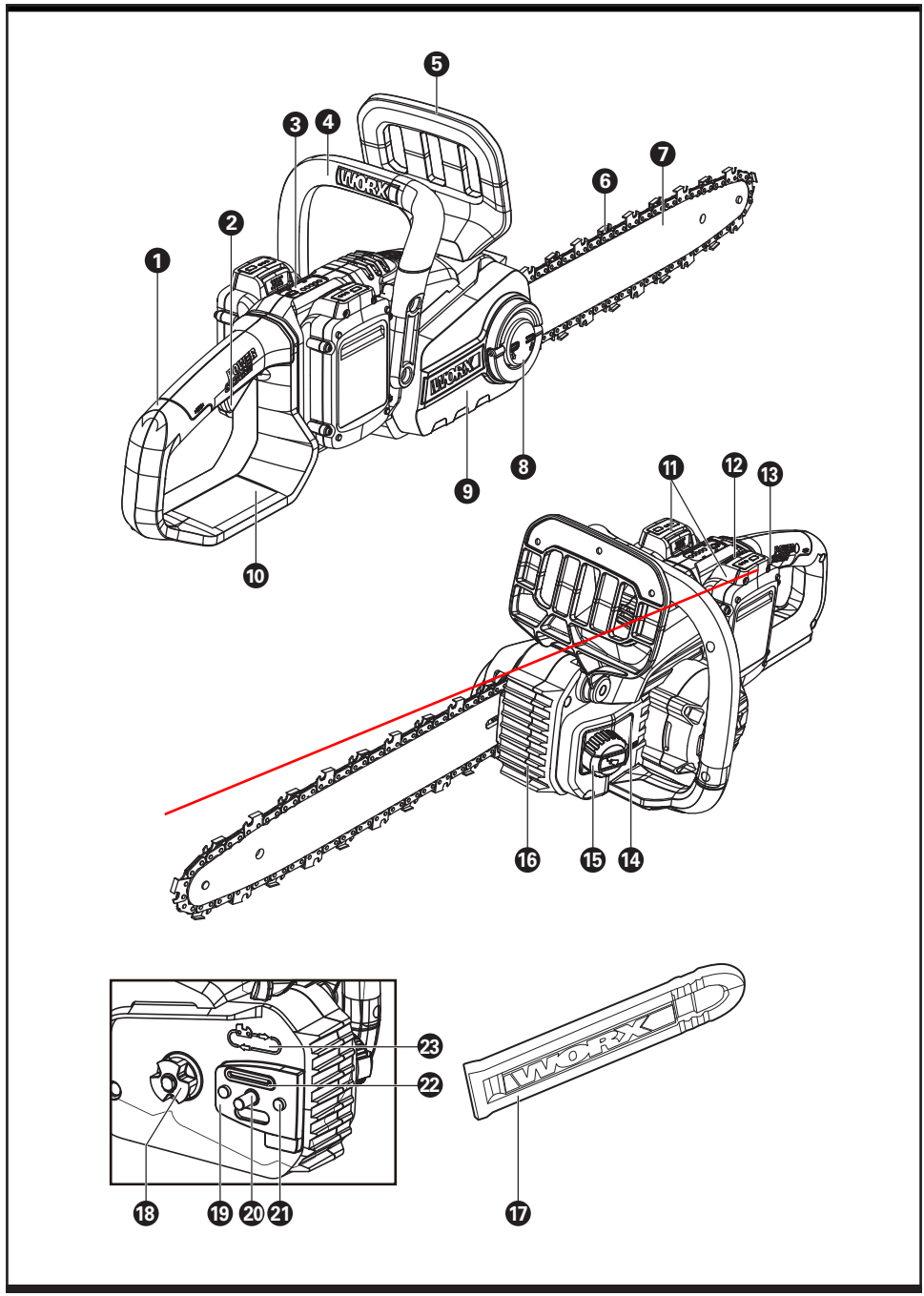

Cordless Chain Saw

EN

1. REAR HANDLE
2. ON/OFF SWITCH
3. POWER INDICATOR LIGHT
4. FRONT HANDLE
5. CHAIN BRAKE LEVER (HAND GUARD)
6. CHAIN
7. GUIDE BAR
8. CHAIN TENSIONING KNOB
9. CHAIN COVER
10. REAR HAND GUARD
11. BATTERY PACK*
12. BATTERY PACK RELEASE BUTTON*
13. LOCK-OUT BUTTON
14. OIL LEVEL WINDOW
15. OIL FILLER CAP
16. BUMPER SPIKE
17. BAR AND CHAIN STORAGE/ TRANSPORTATION COVER (SHEATH)
18. DRIVE SPROCKET
19. BAR PAD
20. FASTENING BAR HOLE
21. BAR LOCATING TABS
22. OIL OUTLET
23. CHAIN DIRECTION SYMBOL
24. BAR TENSIONING PLATE (See Fig. A2)

*** Not all the accessories illustrated or described are included in standard delivery.**

TECHNICAL DATA

	WG384	WG384.9
Voltage	40V⎓ Max (2x20V Max.)**	
Bar length	14" (356 mm)	
Chain speed	26 ft/s (8 m/s)	
Oil tank capacity	5.4 oz (150 ml)	
Chain pitch	3/8" (9.5 mm)	
Number of chain drive links	52	
Chain gauge	0.043" (1.1 mm)	
Adaptive Chain type	QR: A0 (T)-52E / OREGON: 90PX052X	
Adaptive Bar type	QR: P014-43SR(T) / OREGON: 144MLEA041	
Battery capacity	2.0 Ah (WA3575)	/
Battery type	Lithium-Ion	/
Charger model	WA3884	/
Charger rating	Input: 120V~60Hz Output 1: 20V ⎓, 2.0A *** Output 2: 20V ⎓, 2.0A ***	/
Charging time (approx.) Battery pack: 2.0 Ah (1pc) 2.0 Ah (2pcs)	 0.5 hr 1 hr	 / /
Machine Weight	10.4 lbs	8.6 lbs

**Voltage measured without workload. Initial battery voltage reaches maximum of 20 volts. Nominal voltage is 18 volts.
*** Charger output 1 and output 2 mean two ports with the same output voltage and current.

ACCESSORIES

	WG384	WG384.9
Chain	**1**	**1**
Bar	**1**	**1**
Transportation Cover	**1**	**1**
Charger(WA3884)	**1**	**/**
Battery(WA3575)	**2**	**/**

Only use the appropriate accessories intended for this tool. Accessory information can be found on the product packaging, at a WORX dealer or on our website at www.worx.com.

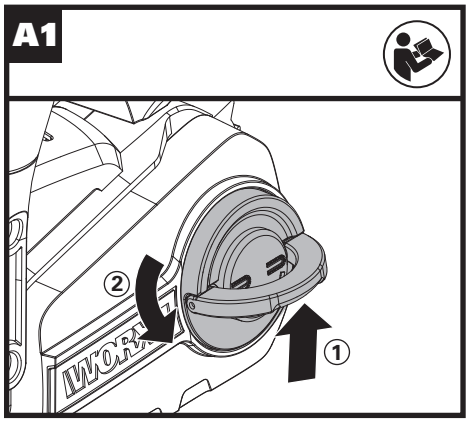
A1
②
①

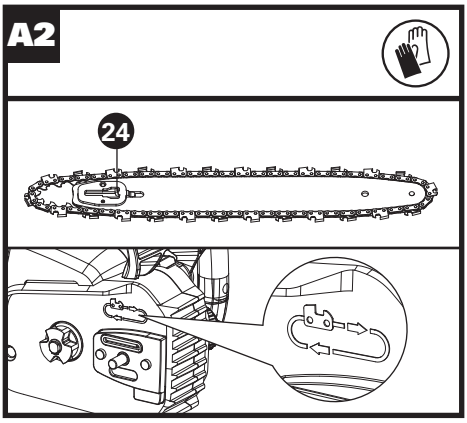
A2
24

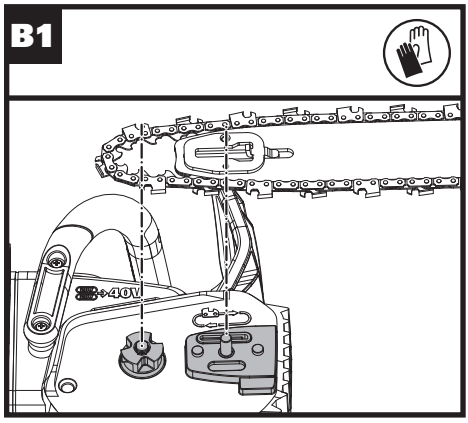
B1
40V

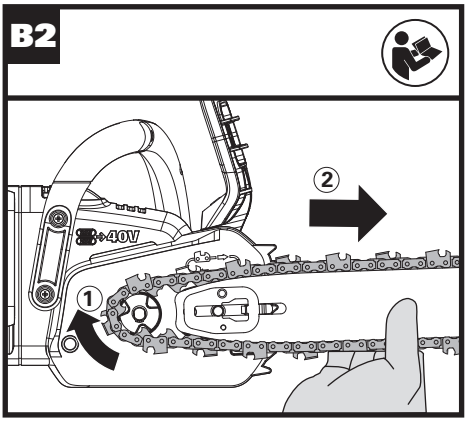
B2
②
40V
①

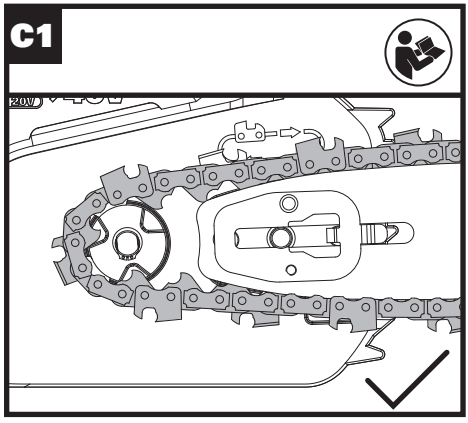
C1
20V
40V

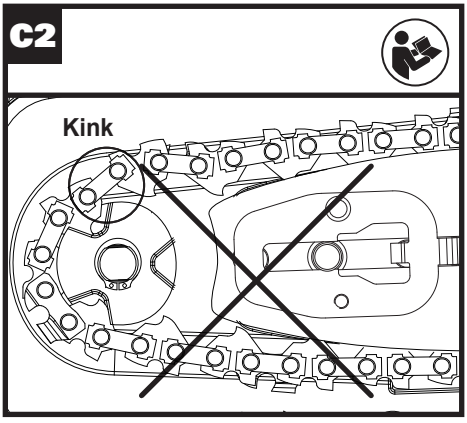
C2
Kink

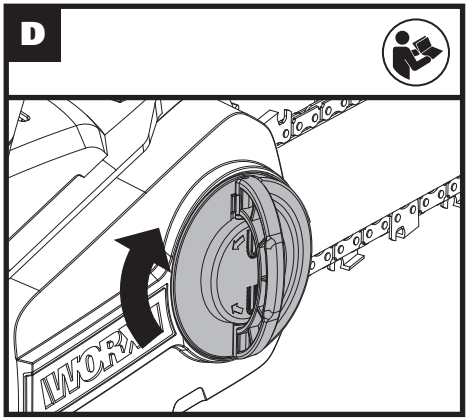
D

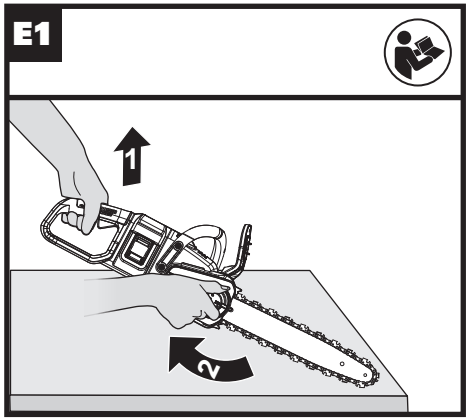
E1
1
2

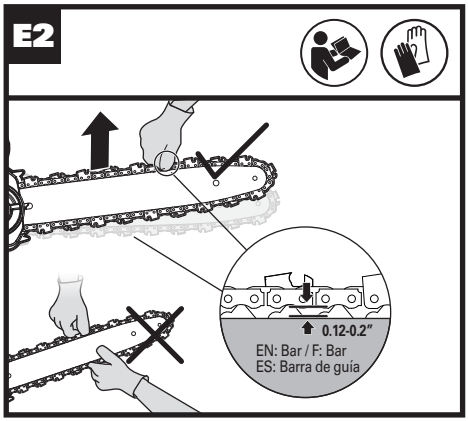
E2
0.12-0.2"
EN: Bar / F: Bar
ES: Barra de guía

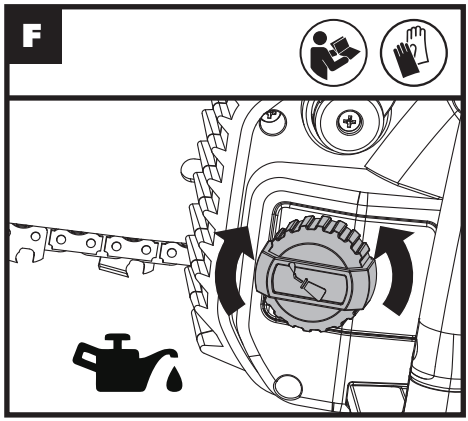
F

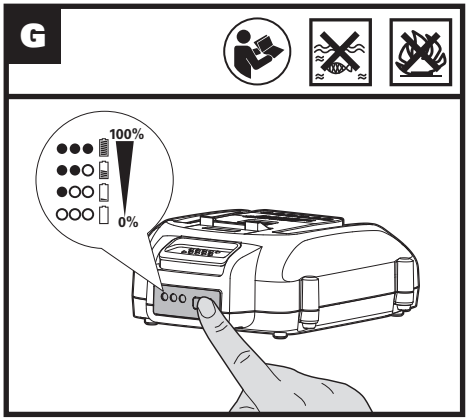
G
100%
0%

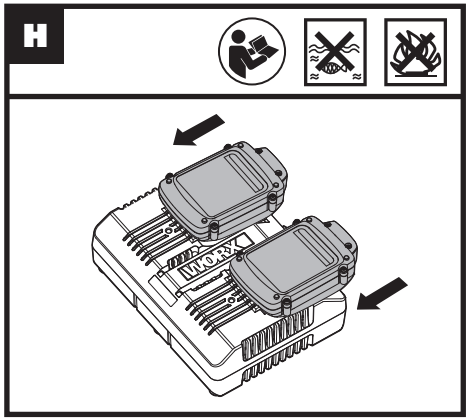
H

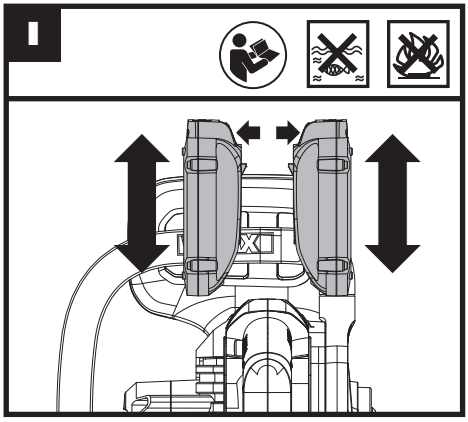
I

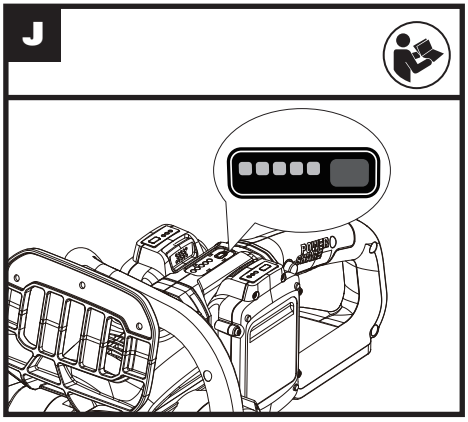
J

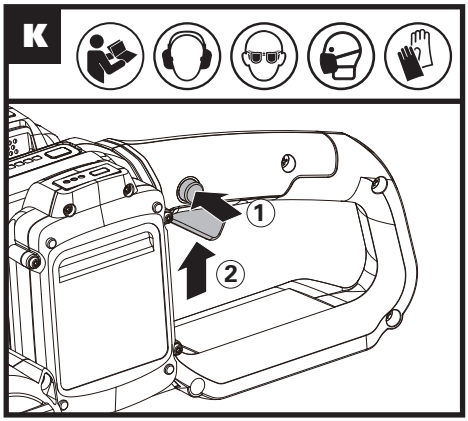
K
1
2

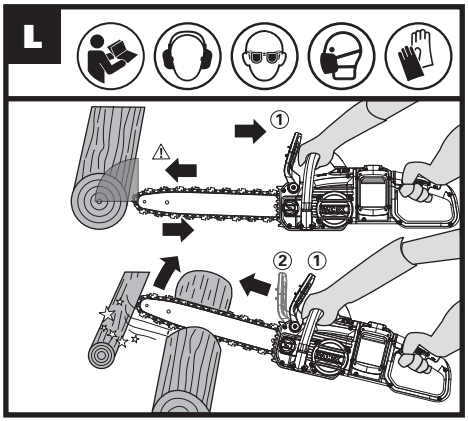
L
1
2
1

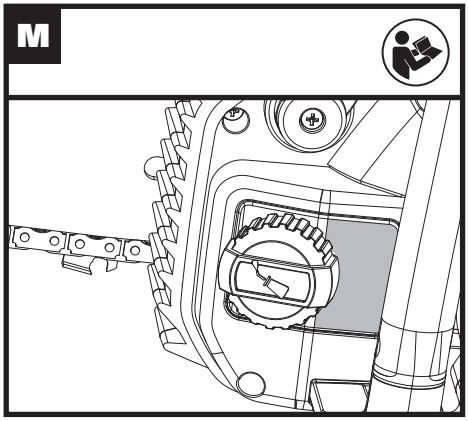
M

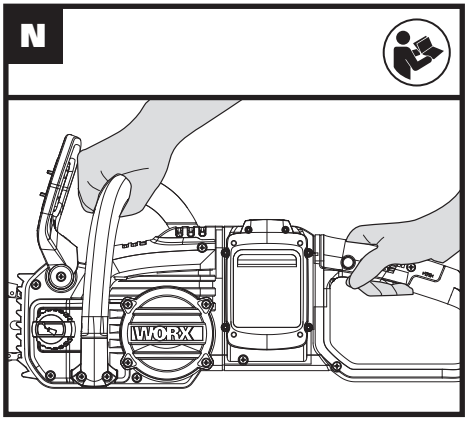
N
WORX

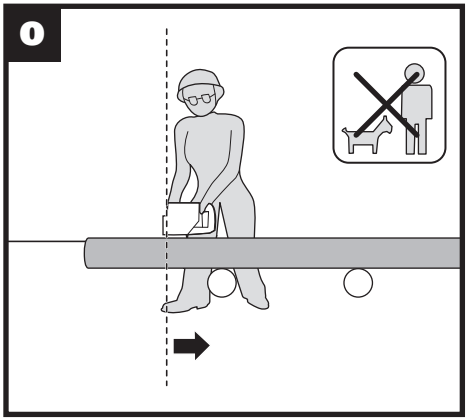
O

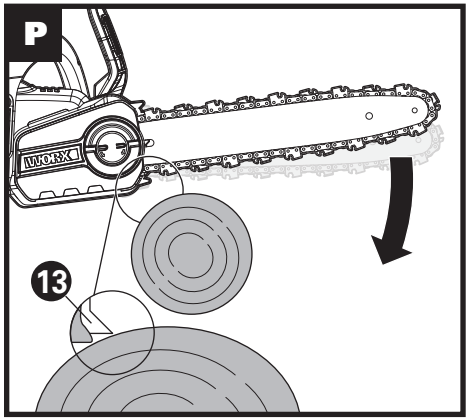
P
13

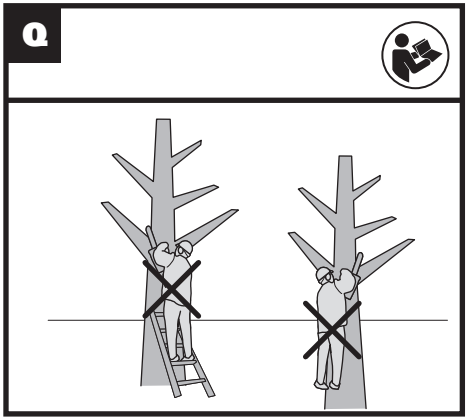
Q

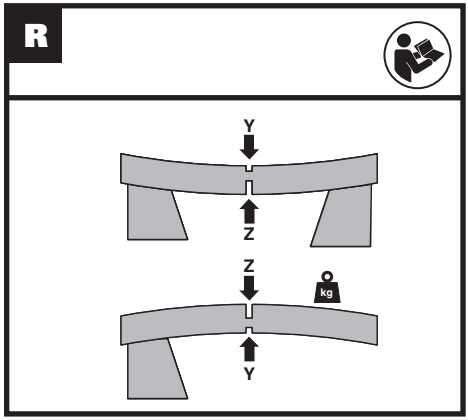
R
Y
Z
Z
kg
Y

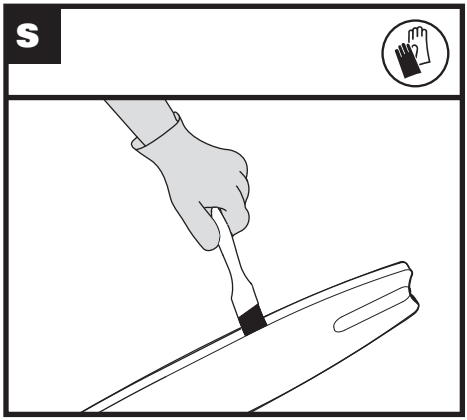
S

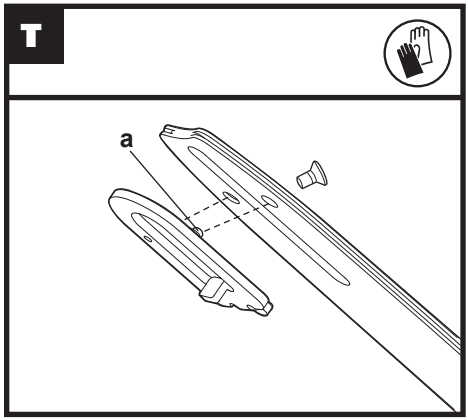
T
a

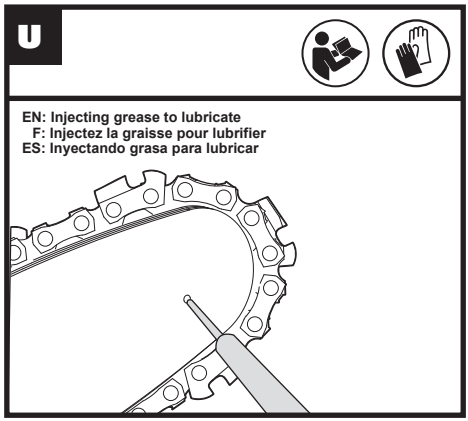

INTENDED USE
The chain saw is intended for sawing of trees, tree trunks, branches, wooden beams, planks, etc. Cuts can be sawed with or across the grain. This product is not suitable for sawing mineral materials.

ASSEMBLY

⚠ WARNING! Do not install the battery pack before it has been completely assembled.
Always use gloves when handling the chain.

CHAIN AND GUIDE BAR ASSEMBLY
1. Unpack all parts carefully. Remove the chain cover by turning the chain tensioning knob in a counter-clockwise direction. (See Fig. A1)
2. Place the chain saw on a solid, level surface.
3. Use only genuine WORX chains or those recommended for Guide Bar.
4. Slide the chain in the slot around the guide bar. Ensure the chain is in correct running direction by comparing it to the chain icon on the guide bar, or referring to the chain direction symbol found on the saw body. Ensure the bar tensioning plate is facing outward. (See Fig. A2)
5. Fit the chain onto the drive sprocket, so that the fastening bar hole and the two bar locating tabs on the bar pad fit into the keyway of the opening on the guide bar. (See Fig. B1, B2)
6. Assure all parts are seated properly and hold chain and guide bar in a level position. Make sure the drive links are fully seated in the drive sprocket (See Fig. C1), avoiding a kink as shown in Fig. C2. If kink occurs, pick up on the chain at the guide bar just ahead of the kink and then pull the kink out.
   NOTE: Chain should rotate freely and be free of kinks.
7. Fit the chain cover and tighten the chain cover by turning the chain tensioning knob clockwise until it is tight. (See Fig. D)
8. The chain will stretch while cutting and lose proper tension. When the chain becomes loose, completely unscrew the chain tensioning knob or turn the knob around three (3) full turns in a counter-clockwise direction, then retighten the chain tensioning knob to properly reset the chain tension by repeating Steps 6-7 listed above.

⚠ WARNING: The chain is not yet tensioned. Tensioning the chain applies as described under "TENSIONING CHAIN". The chain now needs to be inspected to make sure it is properly tensioned.

TENSIONING CHAIN (See Fig. E1, E2)
NOTE: New saw chains will stretch. Check the chain tension frequently when first used and tighten when the chain becomes loose around the guide bar.

⚠ WARNING:
- Removing the battery pack before adjusting saw chain tension.
- Cutting edges on chain are sharp. Use protective gloves when handling chain.
- Maintain proper chain tension always. A loose chain will increase the risk of kickback. A loose chain may jump out of guide bar groove. This may injure operator and damage chain. A loose chain will cause chain, bar, and sprocket to wear rapidly.

1. Place the chain saw on any suitable flat surface.
2. Turn the chain tensioning knob clockwise until it is hand tight.
   NOTE: The tension is automatically increased while the chain tensioning knob is being turned in a clockwise direction. The built-in ratchet

mechanism prevents the chain tension from loosening.
3. Tilt the saw forward (See E1) where the guide bar tip is pushed in an downward direction. This will remove slack from the chain.
4. Fully tighten the chain tensioning knob by turning it clockwise.
5. Double check the tension set by the automatic chain tensioning knob. The correct chain tension is reached when the chain can be raised approx. Half the drivelink depth from the guide bar in the center. This should be done by using one hand to raise the chain against the weight of the machine. (See Fig. E2)
   NOTE: The chain is properly tensioned when it can be lifted off of the Guide Bar and the drivelink is within the rail of the Guide Bar.
   NOTE: The chain will stretch while cutting and lose proper tension. When the chain becomes loose, completely unscrew the chain tensioning knob or turn the knob around three full turns in a counter-clockwise direction, then retighten the chain tensioning knob to properly reset the chain tension by repeating Steps 1-4 listed above.

LUBRICATION (SEE FIG. F)

IMPORTANT: The chain saw is not filled with oil. It is essential to fill with oil before use. Never operate the chain saw without chain oil or at an empty oil tank level, as this will result in extensive damage to the product.

NOTE: Chain life and cutting capacity depend on optimum lubrication. Therefore, the chain is automatically oiled during operation.

FILLING OIL TANK:

WARNING: Removing the battery pack before filling the oil tank.

1. Set chain saw on any suitable surface with oil filler cap facing upward.
2. Clean area around the oil filler cap with cloth and unscrew the cap by turning it counter clockwise.
3. Add bar and chain oil until tank is full.
4. Avoid dirt or debris entering oil tank, refit oil filler cap and tighten by turning clockwise until hand tight.

IMPORTANT: To allow venting of the oil tank, small breather channels are provided between the oil filler cap and the strainer, to prevent leakage, and ensure machine is left in a horizontal position when not in use.

It is important to use only the recommended standard bar and chain oil (Grade: ISO VG32) to avoid damage to the chain saw. This can be found at the location where you purchased this saw or your local hardware store. Never use recycled/old oil. Use of non approved oil will void the warranty.

Do not swallow. If swallowed, call a physician immediately. Keep out of reach of children. Store away from heat or open flame.

CHECKING THE AUTOMATIC OILER

Proper functioning of the automatic oiler can be checked by running the chain saw and pointing the tip of the guide chain bar towards a piece of cardboard or paper on the ground. If an increasing oil pattern develops on the cardboard, the automatic oiler is operating fine. If there is no oil pattern, despite a full oil reservoir, contact WORX customer service agent or WORX approved service agent.

CAUTION: Do not touch the ground with the chain. Ensure safety clearance of 30cm.

OPERATION

1. BEFORE USING YOUR CORDLESS TOOL

WARNING! The charger and battery pack are specially designed to work together so do not attempt to use any other devices. Never insert or allow metallic objects into your charger or battery pack connections because of an electrical failure and hazard will occur.

NOTE: Your battery packs are shipped UNCHARGED and you must charge once before use.

The battery charger supplied is matched to the Li-ion battery installed in the machine. Do not use another battery charger.

2. CHECKING THE BATTERY CHARGE CONDITION (See Fig. G)

The battery level can be known from the battery indicator light by pressing the button beside the lights.

Note: Fig. G only applies for the battery pack with battery indicator light.

3. CHARGING YOUR BATTERY PACK (See Fig. H)

The Li-ion battery is protected against deep discharging. When the battery is empty, the machine is switched off by means of a protective circuit. Each battery must be fully charged before the first use. In a warm environment or after heavy use, the battery pack may become too hot to permit charging. Allow time for the battery to cool down before recharging.

Note: Always fully charge the two batteries at same time. More details can be found in charger's manual.

4. TO REMOVE OR INSTALL BATTERY PACK (See Fig. I)

Depress the battery pack release button to remove the battery pack from your tool. After recharging, insert the battery pack into the battery port. A simple push and slight pressure will be sufficient until a click is heard. Check to see if the battery is fully secured.

Note:

- **When removing the battery pack, hold it firmly to avoid dropping and injury.**
- **This machine will only run when 2 batteries are installed. It is recommended to use the same two batteries and charge the two**

batteries at the same time.

- **Using two different sized batteries or if one battery isn't fully charged then the machine will only run to the lowest common denominator.**

5. POWER INDICATOR LIGHT (See Fig. J)
MPORTANT:
When only one light is illuminated, your battery is overly discharged, even though the machine may still be capable to work. Continuing to operate your machine with the battery in this discharged condition may reduce the life and performance of your battery.
When no light is illuminated, at least one battery is not fully installed or battery may be defective, please double check the batteries are fully seated into position.

BATTERY STATUS
Before starting or after use, press the button beside the power indicator light on the machine to check the battery capacity. The indicator lights displays the battery condition as follows:

Battery indicator light status	Battery condition
Five green lights (■■■■■) are illuminated.	The two batteries are in a highly charged condition.
Two, three or four green lights are illuminated.	The two batteries have a remaining charge. The more lights are illuminated, the more battery capacity.
Only one green light (■□□□□) is illuminated.	The battery level of at least one battery pack is very low. Please check and charge the battery pack.
No light is illuminated.	At least one battery is not fully installed or battery may be defective.
Only one light is flashing twice per cycle.	At least one battery is over discharged (please refer to the battery charge condition), please recharge the two batteries at once before use again or storage.
Only one light is flashing three times per cycle.	At least one battery is hot, wait for them cool down before start again.
Only one light is flashing four times per cycle.	The machine is over load. Remove tool from cutting area and try again.

6. SWITCHING ON AND OFF (SEE FIG. K)
ATTENTION: Check the battery pack before using your cordless tool. Only use the battery pack listed in the accessories section.
For **switching on the tool**, press the lock-out button, then fully press the on/off switch and hold in this position. The lock-out button can now be released.
For **switching off**, release the on/off switch.
NOTE: The chain brake must be activated in order for the saw to be switched on.

7. CHAIN BRAKE LEVER (SEE FIG. L)
The chain brake lever is a safety mechanism activated through the front hand guard, when kickback occurs. Chain stops immediately.
The following function check should be carried out at regular intervals. Push front hand guard forwards (position ❷) and start the chain saw. The chain must not start. To deactivate the kickback brake, pull hand guard backwards (position ❶), and release on/off switch (2).
Note: If the saw is unable to start, even though it is assembled properly and working with fully charged battery packs, then you should check if the chain brake lever is in the correct position (position ❷).

8. CUTTING
Important: Is the oil tank filled? Check the Oil Level Window prior to starting and regularly during operation (See Fig. M). Refill oil when oil level is low. A full oil tank will last approx. 12 minutes of cutting depending on sawing intensity and stops.
Check recent replaced chain tension about every 10 minutes during operation.

(1) Installing the battery pack into the machine.
(2) Make sure section of log to be cut is not laying on the ground. This will keep the chain from touching the ground as it cuts through the log. Touching the ground while the chain is moving is dangerous and will dull the chain.
(3) Use both hands to grip saw. Always use left hand to grip front handle and right hand to grip rear handle. Use a firm grip. Thumbs and fingers must wrap around saw handles. (See Fig. N)
(4) Make sure your footing is firm. Keep feet-shoulder width apart. Distribute your weight evenly on both feet.
(5) When ready to make a cut, push the lock-out button completely in with the right thumb and squeeze the trigger. This will turn saw on. Releasing the trigger will turn the saw off. Make sure the saw is running at full speed before starting a cut.
(6) When starting a cut, slowly place moving chain against the wood. The wood should be as close to the saw body as possible. Hold saw firmly in place to avoid possible bouncing or skating (sideways movement) of saw.
(7) Guide the saw using light pressure and do not

put excessive force on the saw, letting the saw do its work. The motor will overload and can burn out. It will do the job better and safer at the rate for which it was intended.

(8) Remove the saw from a cut with the saw running at full speed. Stop the saw by releasing the on/off switch. Make sure the chain has stopped before setting the saw down.

(9) Keep practicing on scrap logs in a secure working area until you are comfortable, using a fluid motion and a steady cutting rate.

Kickback Safety Devices On This Saw

This saw has a low-kickback chain and reduced kickback Guide Bar. Both items reduce the chance of kickback. However, kickback can still occur with this saw.

The following steps will reduce the risk of kickback.

- Use both hands to grip saw while saw is running. Use firm grip. Thumbs and fingers must wrap around saw handles.
- Keep all safety items in place on saw. Make sure they work properly.
- Do not overreach or cut above shoulder height.
- Keep solid footing and balance at all times.
- Stand slightly to the left side of saw. This keeps your body from being in direct line with chain.
- Do not let Guide Bar nose touch anything when chain is moving.
- Never try cutting through two logs at same time. Only cut one log at a time.
- Do not bury the Guide Bar nose or try plunge cut (boring into wood using guide bar nose).
- Watch for shifting of wood or other forces that may pinch chain.
- Use extreme caution when reentering a previous cut.
- Use only the low-kickback chain and guide bar that were supplied with this chain saw or recommended.
- Never use a dull or loose chain. Keep chain sharp with proper tension.

How to use Saw Safely

1. Use the chain saw only with secure footing.
2. Hold the chain saw at the right-hand side of your body (See Fig. O).
3. The chain must be running at full speed before it makes contact with the wood.
4. Use the bumper spikes to secure the saw onto the wood before starting to cut.
5. Use the Bumper Spikes as a leverage point while cutting. (See Fig. P)
6. Do not operate the chain saw with arms fully extended, attempt to saw areas which are difficult to reach, or stand on a ladder while sawing (See Fig. Q).

Never use the chain saw above shoulder height

CUTTING WOOD UNDER TENSION (SEE FIG. R)

WARNING: When cutting a limb that is under tension, use extreme caution. Be alert for wood springing back. When wood tension is released, limb could spring back and strike operator causing severe injury or death. When sawing logs supported on both ends, start the cut from above(Y) about 1/3 of the diameter into the log (overbuck) and then finish the cut (Z) from below, in order to avoid contact of the chain saw with the ground. When sawing logs supported on only one end, start the cut from below (Y) about 1/3 of the diameter into the log (underbuck) and finish the cut from above (Z) in order to avoid log splitting or jamming of the chain saw.

SAW MAINTENANCE

Follow maintenance instructions in this manual. Proper cleaning of saw and chain and guide bar maintenance can reduce chances of kickback. Inspect and maintain saw after each use. This will increase the service life of your saw.

Note: Even with proper sharpening, risk of kickback can increase with each sharpening.

MAINTENANCE AND STORAGE OF CHAIN SAW

1. **Remove the battery pack**
- When not in use
- Before moving from one place to another
- Before servicing
- Before changing accessories or attachments, such as saw chain and guard

2. **Inspect chain saw before and after each use.** Check saw closely if guard or other part has been damaged. Check for any damage that may affect operator safety or operation of saw. Check for alignment or binding of moving parts. Check for broken or damaged parts. Do not use chain saw if damage affects safety or operation. Have damage repaired by authorized service center. To locate an authorized service center, visit www.worx.com.

3. **Maintain chain saw with care.**
- Never expose saw to rain or direct moisture.
- Keep chain sharp, clean, and lubricated for better and safer performance.
- Follow steps outlined in this manual to sharpen chain.
- Keep handles dry, clean, and free of oil and grease.
- Keep all screws and nuts tight.

4. **When servicing, use only identical replacement parts.**

5. **When not in use, always store chain saw**
- in a high or locked place, out of children's reach
- in a dry place
- with bar and chain cover in place

Bar Maintenance

To maximize bar life, the following bar maintenance

is recommended.
The bar rails that carry the chain should be cleaned before storing the tool or if the bar or chain appear to be dirty.
The rails should be cleaned every time the chain is removed.

To clean the Bar rails:

1. Remove chain cover and bar and chain. (see section ASSEMBLY)
2. Using a wire brush, screwdriver or similar tool, clear the residue from the inner groove of the bar. (See Fig. S)
3. Make sure to clean oil passages thoroughly

Conditions which require chain and guide bar maintenance:

- Saw cuts to one side or at an angle.
- Saw has to be forced through the cut.
- Inadequate supply of oil to the bar and chain.

Check the condition of the guide bar each time the chain is sharpened. A worn guide bar will damage the chain and make cutting difficult.
After each use, remove the battery pack, clean all sawdust from the guide bar and sprocket hole.

When rail top is uneven, use a flat file to restore square edges and sides.

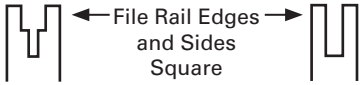

Worn Groove Correct Groove

Replace the guide bar when the groove is worn, the guide bar is bent or cracked, or when excess heating or burring of the rails occurs. If replacement is necessary, use only the Guide Bar specified for your saw in the repair parts list or on the decal located on the chain saw.

Replacing Bar & Chain
Replace chain when cutters are too worn to sharpen or when chain stops. Only use replacement chain noted in this manual.
Inspect guide bar before sharpening chain. A worn or damaged guide bar is unsafe. A worn or damaged guide bar will damage chain. It will also make cutting harder.
Fit the bar tensioning plate tab into the new bar by tightening the screw clockwise. The tab protrusion (a) must be fitted into the bar hole. (See Fig. T)

SHARPENING SAW CHAIN

WARNING: Unplug chain saw from power source before servicing. Severe injury or death could occur from electrical shock or body contact with moving chain.
Cutting edges on chain are sharp. Use protective gloves when handling chain.
Keep chain sharp. Your saw will cut faster and more safely. A dull chain will cause undue sprocket, guide bar, chain, and motor wear. If you must force chain into wood and cutting creates only sawdust with few large chips, chain is dull.

LUBRICATE SPROCKET

WARNING: Wear heavy duty gloves when performing any maintenance or service to this tool. Always unplug the tool before performing any service or maintenance on this tool.
NOTE: It is not necessary to remove the chain or bar when lubricating the guide bar sprocket.

1. Clean the bar and sprocket
2. Using a grease gun, insert the tip of the gun into the lubrication hole and inject grease until it appears at the outside edge of the sprocket tip (See Fig. U).
3. To rotate the sprocket pull the chain by hand until the ungreased side of the sprocket is in line with the grease hole. Repeat the lubrication procedure.

TROUBLESHOOTING TABLE

The following table gives checks and actions that you can perform if your machine does not operate correctly. If these do not identify/remedy the problem, contact your service agent.

WARNING: Switch off and remove plug from power source before investigating fault.

Symptom	Possible Cause	Remedy
Chain saw fails to operate	Low battery charge.	Charge both the battery packs.
	Chain break not in the proper position.	Check to see if the chain break is in position 2. Refer to CHAIN BREAK for details.
	Fuse faulty.	Replace fuse.
Chain saw operates intermittently	Over heating	Place the machine in a cool, ventilated place to cool it down
	Applying too much pressure while cutting.	Applying relatively less pressure while cutting
	Loose connection.	Contact service agent 1-866-354-WORX (9679).
	Internal wiring defective.	
	On/off switch defective.	
Dry chain	No oil in reservoir	Refill oil
	Vent in oil filler cap clogged	Clean cap
	Oil passage clogged	Clean oil passage outlet
Kickback Brake/Run Down Brake	Brake does not stop chain	Contact service agent
Chain/chain bar over-heats	No oil in reservoir	Refill oil
	Vent in oil filler cap clogged	Clean cap
	Oil passage clogged	Clean oil passage outlet
	Chain is over tensioned	Adjust chain tension
	Dull chain	Sharpen chain or replace
Chain saw rips, vibrates, does not saw properly	Chain tension too loose	Adjust chain tension
	Dull chain	Sharpen chain or replace
	Chain worn out	Replace chain
	Chain teeth are facing in the wrong direction	Reassemble with chain in correct direction

FOR BATTERY TOOLS

The ambient temperature range for the use and storage of tool and battery is 0°C-45°C.
The recommended ambient temperature range for the charging system during charging is 0°C-40°C.