YPOO

WALKING PAD TREADMILL USER MANUAL

Product Model: T7



Contents

01 Important Safety Instructions 04

02 Safety Notice 07

03 Product Introduction 09

04 Installation Steps 10

05 Incline Adjustment 16

06 Manual Mode Operating Instructions 17

07 Function Menu 19

08 Remote Control Operation 24

09 Error Codes&Troubleshooting 25

10 APP User Manual 27

11 Care And Maintenance 29

12 Warranty 31

13 Workout Guide 33

Customer Service

Thank You for Your Purchase!

For any issues such as damaged or defective products, questions about replacement parts or any other service support, please contact our customer service department using the following methods:

support@ypoofitness.com

12-24 Hours

1-844-977-0007

To receive the quickest response, especially during peak business hours, emailing us with your Order ID and Description of Parts (Adding photos or videos would be helpful) is the best method.

Important:

Please do not return this product or submit a parts description without first contacting customer service.

Download and use of YPOOFIT

1. To download the YPOOFIT app, scan the QR code or search "YPOOFIT" in the Apple App Store or Google Play Store.

YPOOFIT APP Download

APP Connection Guide

2. Open the YPOOFIT app. Log In or Sign Up.
3. Please note: If your phone is Apple - iPhone, please refer to the path: Profile > Settings>Language after login to switch the desired language.
4. Follow the in-app instructions to set up your device.

01. Important Safety Instructions

DANGER -To reduce the risk of electric shock

Always unplug this appliance from the electrical outlet immediately after using and before cleaning.

WARNING -To reduce the risk of burns, fire, electric shock, or injury to persons

- Never leave electrical appliances unattended after plugging them into an outlet. Unplug the appliance when not in use, and before installing or removing any parts.
- Do not use this device under blankets or pillows. Overheating may cause fire, electric shock, or personal injury.
- Children, patients, or persons with disabilities must be supervised by an adult at all times when using this device.
- Use the device strictly according to the instructions in this manual.
  Do not use accessories not recommended by the manufacturer.
- Do not use the device if the power cord or plug is damaged, if the device malfunctions, or if it has been dropped, damaged, or submerged in water. Contact the after-sales service department for assistance.
- Do not carry the device by the power cord, nor use the power cord as a handle.
- Keep the cord away from heated surfaces.

01. Important Safety Instructions

- Never use this device with the ventilation openings blocked. Keep the ventilation openings clear and free of lint, hair, and other debris.
- Do not drop or insert any objects into any openings.
- Do not use outdoors.
- Do not operate in areas where aerosol (spray) products are being used or where oxygen is being administered.
- CAUTION: To reduce the risk of injury from moving parts, unplug before servicing.
- WARNING: To reduce the risk of electric shock, unplug before cleaning or servicing.
- WARNING: Risk of personal injury. Keep children under the age of 13 away from this walking treadmill.
- To disconnect, turn all controls to the OFF position, then remove the plug from the outlet.
- This appliance is not intended for use by persons with reduced physical, sensory or mental capabilities or lack of experience and knowledge, unless they have been given supervision or instruction concerning use of the appliance by a person responsible for their safety.

01. Important Safety Instructions

SAVE THESE INSTRUCTIONS

GROUNDING INSTRUCTIONS:

- **This product must be grounded.** If it malfunctions or breaks down, grounding provides a path of least resistance for electric current, which reduces the risk of electric shock.
- The plug must be connected to a properly installed and grounded outlet that complies with all local electrical codes and ordinances.

⚠ DANGER

- Risk of Electric Shock: Improper connection of the equipment grounding conductor can result in a risk of electric shock. If you are unsure whether this product is properly grounded, consult a qualified electrician or service technician.
- Do not modify the plug provided with this product. If the plug does not fit your outlet, have a qualified electrician install a proper outlet.

02. Safety Notice



DO NOT
use during the 5-second auto-calibration cycle (after power-on).



DO NOT
store upright.



DO NOT
store sideways.

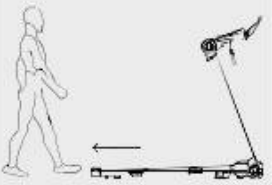

DO NOT
step on or off the walking treadmill while it is in operation.



DO NOT
use on uneven ground.

02. Safety Notice



Please keep your gaze level to avoid dizziness.



Caution:
Extra care is required for elderly and pregnant users.

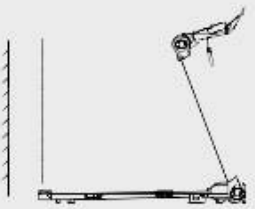

Please keep a rear clearance of at least 39 inches.



Children must be supervised at all times.



Please wear proper athletic footwear.

03. Product Introduction

Please inspect package contents on arrival.

If items are missing or damaged, please contact support@ypoofitness.com

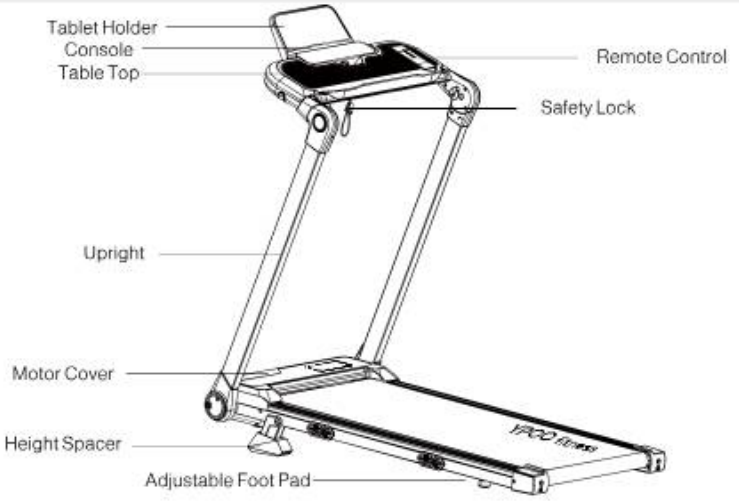

3.1 Accessories


Table Top*1


Tablet Holder*1


Safety Lock*1


Knob*2


Tool*1


Silicone Oil*1


Pull-ring Pin*2


Height Spacer*2


Tabletop Fixing Hook*2


Remote Control*1


Left Post Decorative Cover*1


Right Post Decorative Cover*1


M8×35MM screws*2

3.2 Specification

Type:	T7
Operating Voltage:	110-120V
Speed:	0.6-7.5MPH
Shock Absorption:	Air

04. Installation Steps

⚠ The main frame of the treadmill is pre-assembled at the factory. Please follow these instructions to complete the final assembly and secure all components.

01

Step 1: Unboxing and Placement
Remove the machine from the carton, lift the upright upward, then fold down the front part of the handrail on the upright.

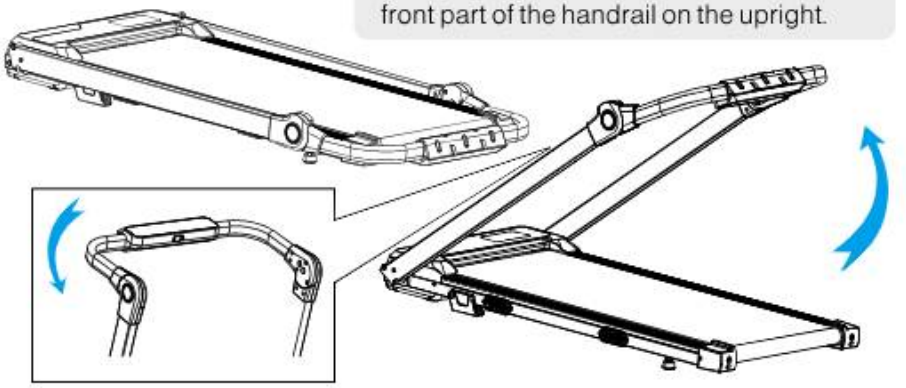

04. Installation Steps

02

Step 2: Removing Pre-installed Screws

Use the cross-head end of the L-shaped wrench to remove the 4×16MM screws pre-installed on the left and right column handrails.

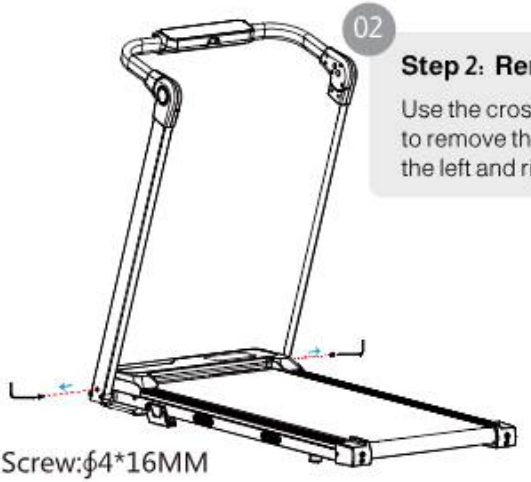

Screw:ϕ4*16MM



03

Step 3: Installing Left/Right Decorative Plates

Take out the left and right decorative plates. Use the 4×16MM screws removed in Step 2, align them with the holes on the columns, and install and tighten the left and right decorative plates securely.

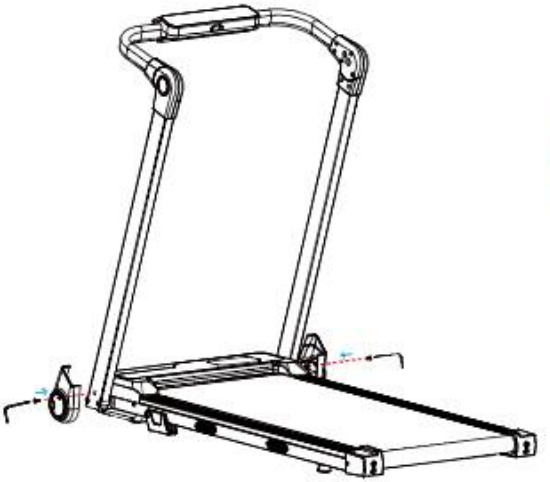

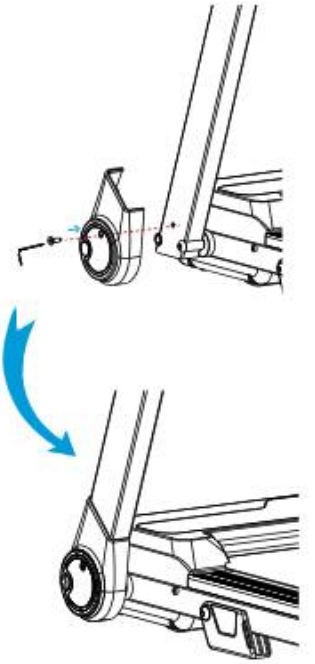

04. Installation Steps

04

Step 4: Connecting Upright to Running Deck

Take the M8×35MM screws from the parts bag. Use the L-shaped wrench to pass the screws through the holes in the left and right decorative plates, and firmly connect the column to the running deck frame.

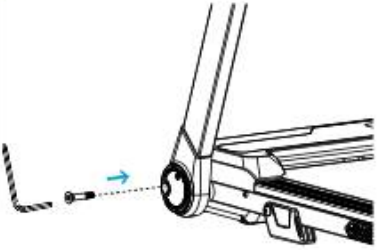

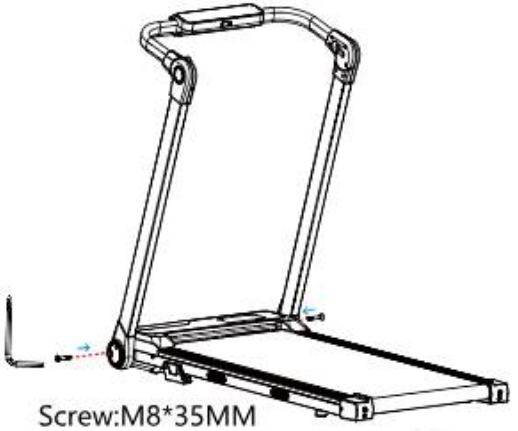

Screw:M8*35MM

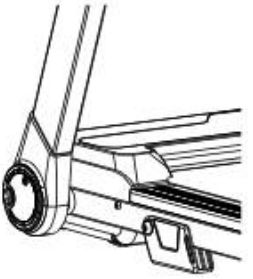

05

Step 5: Securing Handrail (Pull-ring Pin)

Insert the pull-ring pin into the corresponding holes on the handrail and column, and ensure the handrail is fully locked.

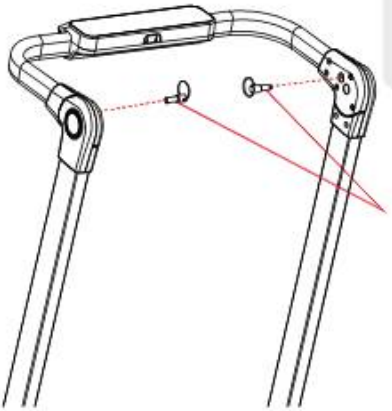

Pull-ring Pin

04. Installation Steps

Safety Lock Usage Notes

- Please be sure to insert the safety lock into the designated slot on the console; the treadmill can only enter standby mode after this.
- When using the machine, please clip the safety lock firmly onto your clothing to prevent accidents.
- Pulling out the safety lock will immediately stop the machine, which can be used for emergency stops.
- Before using the machine again, please reinsert the safety lock into the slot and restart the program.

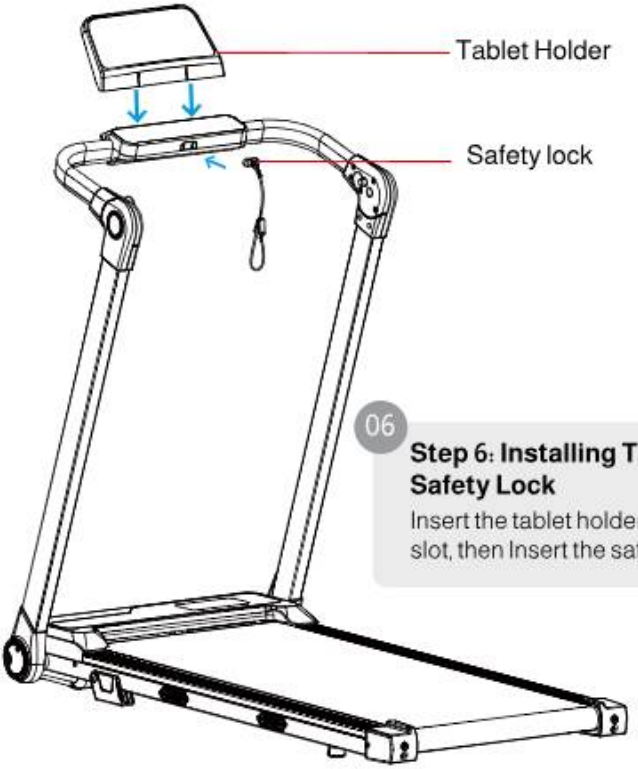

06

Step 6: Installing Tablet Holder and Safety Lock

Insert the tablet holder into the corresponding slot, then Insert the safety lock.

04. Installation Steps

07

Step 7: Installing Desktop Panel

Place the desktop panel on the handrail, align the fixing hooks on both sides of the desktop with the corresponding holes on the panel, then use the knobs to lock the left and right desktop fixing hooks and the desktop panel to the handrail respectively.

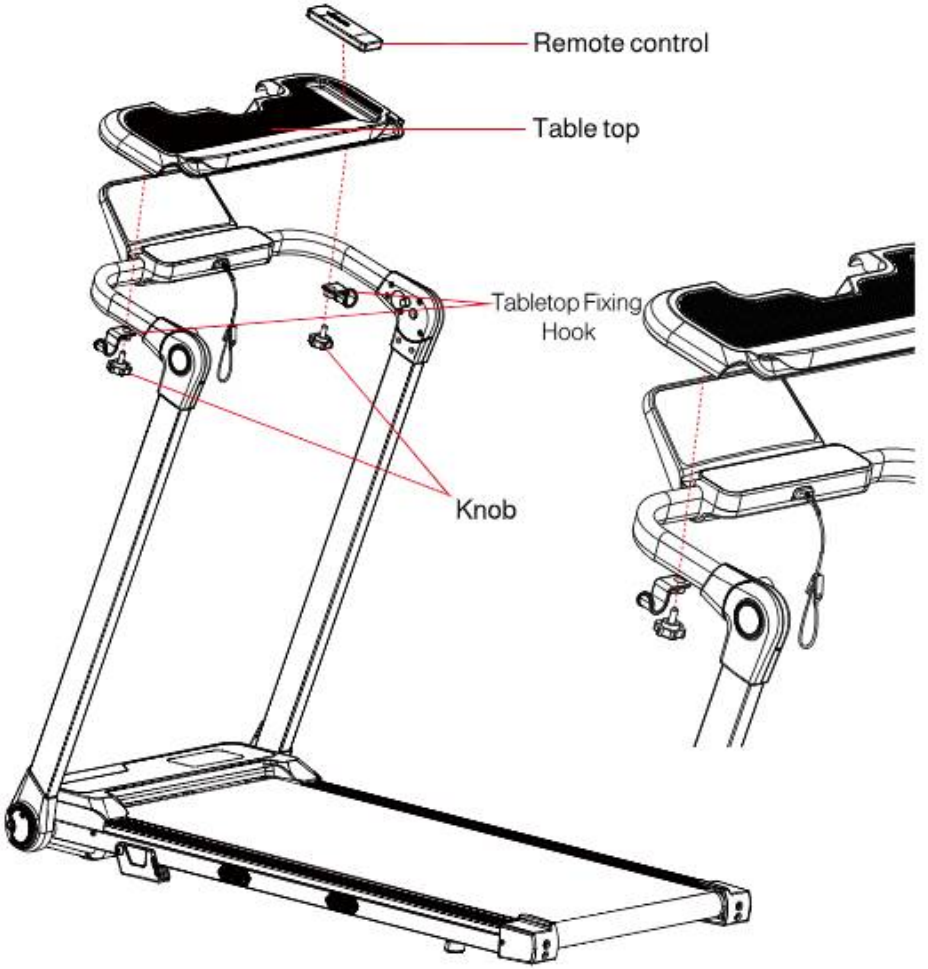

04. Installation Steps

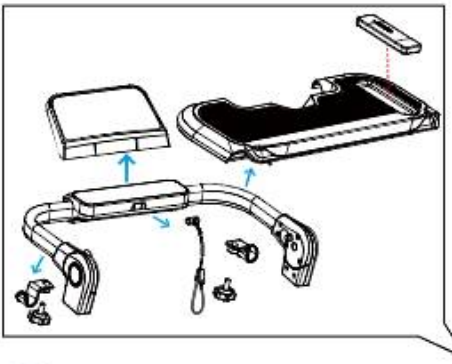

Remove Accessories

Before folding the treadmill, please fully **remove** the installed **table top** and **tablet holder first**, to avoid damage or collision to the accessories during the folding process.

08

Folding Instructions

To fold the treadmill, use the L-shaped wrench to loosen the left and right M8×35MM screws from **Step 4 first**. Only after **loosening** both **screws** can you safely **fold** the treadmill



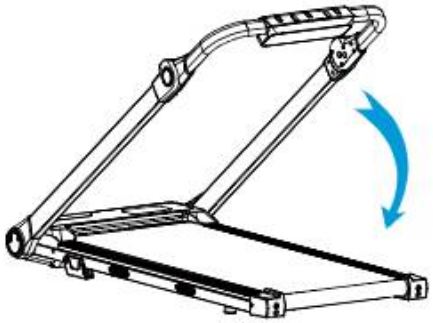

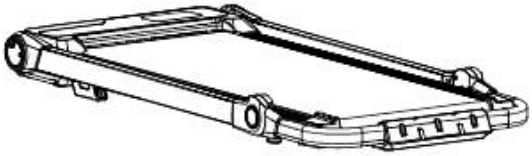

05. Incline Adjustment

Important Safety Notes (For Level 2 Incline Adjustment)
When adjusting to Level 2 incline, the foldable incline adjuster must be unfolded downward to the limit position (the point where it can no longer be pushed forward) and confirmed to be fully locked.

- Failure to unfold it fully may pose a hand pinching hazard.
- Failure to lock it securely may cause sudden rebound during exercise, leading to loss of support and resulting in falls or other serious safety accidents.

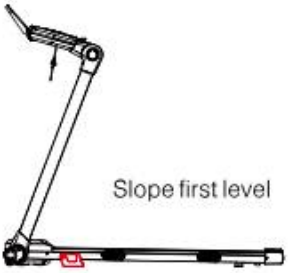

01

Level 1 (Default State): The machine lies flat with the foldable incline adjuster retracted.

02

Level 2: First lift the head of the machine, then unfold the front foldable incline adjuster downward to the limit position and lock it securely.





03

Level 3: Install the height spacer (included with the machine) under the front foldable incline adjuster.

06. Manual Mode Operating Instructions

Manual Mode Operating Instructions

IMPORTANT SAFETY NOTE

Operating instruction of treadimill:
Power socket with ground line must be used for your safety when you use the treadmill.
While this product is designed and manufactured with safety in mind, please follow all instructions carefully to ensure safe operation.

Step 4: Operating Instruction

Operating instruction of treadmill:
Power socket with ground line must be used for your safety when you use the treadmill.

1. Place the treadmill on a level, open area.
2. Insert power plug into socket and turn on power switch (light turns red). You will hear "beep" and window on instrument panel displays.
3. Check the display to ensure all data appears normal. Before pressing the Start button, make sure the column and running deck frame are securely connected。
4. Place safety lock at yellow position of instrument panel, when the treadmill can be normally used. Please clamp the safety lock onto your clothes when using the machine to avoid accidents. You can pull out the safety lock at any time to immediately stop the motor to avoid falling over. Please place the safety lock back and start starting program to use the machine again.
5. Press the Start button. The display will show "3-2-1", with the buzzer sounding once for each countdown. The motor will start automatically once the countdown completes.

06. Manual Mode Operating Instructions



07. Function Menu





SPEED	TIME	KCAL	DIST
Display Speed 0.6-7.5MPH	Display Time 0-99:59	Display Calories 0-999	Display Distance 0-99.9 Mile

Setting Parameter	Initial Value	Display range
Speed (MPH)	0.6	0.6-7.5
Time(Minutes: Seconds)	0:00	0-99:59
Calories (Kcal)	0.00	0-999
Distance (Mile)	0.00	0.00-99.9

Tips: Function Description of Panel Buttons

Key functions: speed shortcut keys 3/6/7.5, stop key, start, M mode/P program mode key, speed - key, speed+key.

1. Panel button functions and operation instructions

A. Start/Pause button - Function description: Start the treadmill running (3S); Pause treadmill operation

1). When the treadmill is stopped, press this button to start the motor running on the electronic watch

2). When the treadmill is in operation, press the start/pause button to pause the treadmill (retain current data)

B. Stop button - Function description: Stop the motor from running

1) . When the electronic watch is paused or running, press this button to end the treadmill operation

07. Function Menu

C. Speed+/- key - Function description: Adjust the speed value during operation

D. Speed Shortcut Key 3/6/7.5- Function Description: Adjust the speed to the corresponding speed.

1). When the treadmill is running, press the speed shortcut key, and the speed will jump to the corresponding speed.

F. Countdown mode/P mode key - Function description: Enter the countdown mode and P program mode states.

1). When the treadmill is in standby mode, press the countdown/ program mode button to enter the time, distance, calorie countdown, P1-P12 program segments in sequence. Each segment of P1-P12 time is one tenth of the total time.

2. Display Briefly describe:

Sports parameters: "Distance" value, "Calories" value, "Time" value.
Sports mode: manual mode, countdown mode, program P mode

3. Parameter Description

Motion parameters in various motion modes:

·Minimum display speed of 0.6MPH
·Maximum display speed of 7.5MPH
·Maximum exercise time in program mode: 99.59 minutes
·Maximum exercise time in countdown mode: 99.59 minutes
·Maximum exercise time in calorie countdown mode: 999 kcal

07. Function Menu

4. Sports mode description

A. Manual mode function

Enter manual mode: After the electronic watch is powered on and fully displayed, it enters manual operation mode. Press the start button to enter manual operation mode.

Operating instructions:

1). The initial operating speed is 0.6MPH, and the time, distance, and calorie windows start counting from zero. Press the speed up and down keys to adjust the size of the operating speed value.

2). Press the speed shortcut keys 3/6/7.5 to quickly adjust the treadmill to the corresponding speed range.

3). The start/pause button can pause the running of the treadmill, and the treadmill will retain the current data. Press the start button again, and the treadmill will start counting down for 3 seconds.

4). Press the stop button while in pause or running mode, and the treadmill will start stopping until it stops. Pulling off the safety lock can urgently stop the motor operation, and the window displays E07.

B. Enter Mode Mode: After the electronic watch is powered on and fully displayed, press the countdown mode/P program mode key to enter the countdown mode.

Operating instructions: In standby mode, press the countdown mode button to enter the time, distance, and calorie countdown interfaces in sequence.

1). Use the speed up and down buttons to adjust the relevant data values

- Time countdown range: 05.00-99.59 minutes
- Distance countdown range: 0.10-99.9 miles
- Calorie countdown range: 10-999 kcal

07. Function Menu

2). After pressing the start button, except for the corresponding countdown value, all other items will be counted positively;
Press the speed up and down keys to adjust the size of the running speed value;

3). Press the speed shortcut keys 3/6/7.5 to quickly adjust the treadmill to the corresponding speed range;

4). Press the start/pause button to pause the running of the treadmill, and the treadmill will retain the current data.
Press the start/stop button again, and the treadmill will start counting down for 3 seconds;

5). Press the end button, and the treadmill will display 'End' and start stopping until paused. When the set parameter decreases to zero, the speed slowly decreases until it stops, then the electronic meter is reset and enters the normal mode of the manual program. Pulling off the safety lock can urgently stop the motor operation, and the window displays E07

Notes: Safety lock function description

1). When in normal use, the safety lock needs to be placed in the designated position on the electronic watch before operating it.

2). Remove the safety lock, and the electronic watch display window will show "E07" accompanied by a warning sound.

3). If the safety lock is removed while in operation, the system will quickly shut down. After reattaching the safety lock, all exercise data will be reset to zero.

C. Enter P program mode: After the electronic watch is powered on and fully displayed, press the countdown mode/P program mode button to enter the program mode state after countdown mode.
Operating instructions:

1) . In standby mode, enter the countdown mode and then press the

07. Function Menu

countdown mode/P program mode key to enter P1-P12 and select any program from P1-P12. After pressing the start button, the treadmill runs at the predetermined speed according to the program.

2) .Each program is divided into 10 segments, with each segment running for 1/10 of the set time. When switching between segments, a beep notification sound will be emitted 3 seconds in advance. When the set time decreases to zero, the speed slowly decreases until it stops, then resets the electronic meter and enters the normal mode of the manual program.

program										
MPH	1 part	2 part	3 part	4 part	5 part	6 part	7 part	8 part	9 part	10 part
P1	1.8	1.8	5.0	3.1	3.1	3.7	1.8	2.5	2.5	1.8
P2	1.8	1.8	2.5	2.5	3.1	3.7	3.1	5.0	5.0	2.5
P3	1.2	2.5	5.0	5.0	2.5	2.5	3.1	1.2	1.8	1.2
P4	1.8	1.8	3.1	2.5	1.2	3.7	3.1	2.5	1.8	1.8
P5	1.8	5.0	1.2	2.5	3.1	3.1	1.2	3.1	3.1	2.5
P6	1.2	5.0	3.1	2.5	2.5	1.8	1.2	1.8	1.8	1.8
P7	1.2	2.5	3.1	5.0	3.1	5.0	3.1	1.8	1.2	1.2
P8	1.2	2.5	2.5	2.5	3.1	3.7	3.1	1.8	5.0	1.2
P9	1.2	2.5	3.1	3.1	5.0	3.1	5.0	1.8	1.8	1.2
P10	1.2	3.1	3.1	3.1	1.8	1.2	3.1	1.2	2.5	1.8
P11	1.2	3.1	5.0	1.8	3.1	1.8	1.2	3.1	1.8	1.2
P12	1.2	1.8	3.1	5.0	2.5	5.0	1.8	5.0	3.1	1.8

5. Bluetooth Music Connection

1). Turn on Bluetooth on your mobile device.

2). Search for the treadmill Bluetooth name and connect successfully.

3). Open your mobile music app and play music through the treadmill speaker.

08. Remote Control Operation

8.1 Remote Control Instructions

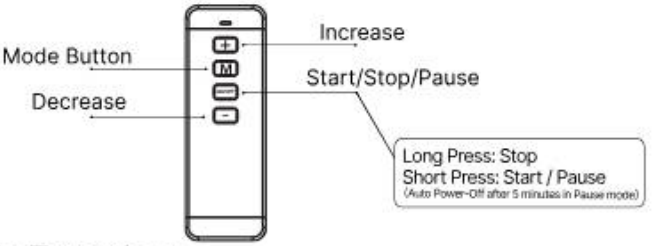

A.Manual Mode Function

In manual mode, press the " " button to begin. The treadmill will start at 0.6MPH, and the time, distance, and calorie counters will start from 0. Press the "+"or "- " buttons to adjust the speed.

The display cycles through speed, calories, time, and distance every 5 seconds.

B.Countdown Mode Function

Press" " and you can use the speed "+"or "-"to set the parameter value.

After setting, press the " " button to run which will automatically stop when it reaches the set value.

- Time Countdown Mode: The window shows 30.00 minutes, set the time (05.00 to 99.59 minutes)with the speed keys.
- Distance Countdown Mode:The window shows 1.0 mile, set the distance (0.10 to 99.9 miles) with the speed keys.
- Calorie Countdown Mode: The window shows 50 kcal, set the target (10 to 999 kcal) with the speed keys.

8.2 Battery

2pcs AAA battery - 1.5V

09. Error Codes& Troubleshooting

Communication Error	Problem Description	Initial Actions & Support	
 E01	Display panel not receiving real-time communication data	1. Check if the upper and lower control connection wires are properly plugged in. 2. Replace the connection wire.	If wires are damaged or the issue persists, please contact us.
 E02	Motor phase loss or short circuit	Replace the motor	Please contact our customer support directly for further assistance.
 E03	Hall sensor fault	Check if the Hall sensor wire is properly plugged in. If plugged in, power off and then power on again.	Issue unresolved? Please contact us.
 E04	Controller has not received real-time communication data	1. Verify the upper/lower control connection wires are securely plugged in. 2. Replace the connection wires.	If wires are damaged or the issue persists, please contact us.
 E05	Overcurrent protection	Power off and then power on again.	Issue unresolved? Please contact us.
 E06	Stall protection	Check if any foreign objects are obstructing the motor, preventing rotation.	Issue unresolved? Please contact us.
 E07	Safety Key	1. Verify the safety key is correctly positioned over the safety lock magnet. 2. Inspect the wiring under the upright column for any visible damage.	Issue unresolved? Please contact us.

09. Error Codes& Troubleshooting

Communication Error	Problem Description	Initial Actions & Support	
E08	Display panel and keypad communication failure	1. Check if the display panel and keypad connection wire is properly plugged in. 2. Replace the connection wire.	If wires are damaged or the issue persists, please contact us.
E09	Undervoltage protection	Check if the input voltage matches the controller's rated voltage.	Issue unresolved? Please contact us.
E0A	Overvoltage protection	1. User's grid voltage is unstable. 2. Replace the controller.	Issue unresolved? Please contact us.

Important Safety Notice:

Power off and unplug the device before performing any checks.
Do not disassemble core components or perform risky operations.
Our support team will provide you with professional solutions.

10. APP User Manual

Scan The QR Code
Download YPOO FIT APP

Connect the Device

Ensure Bluetooth is enabled on your mobile phone or tablet.

- 1. Download and install the YPOOFIT app on your device. You can search for "YPOOFIT" in the App Store/Google Play, or scan the QR code to download and install it.
- 2. Open the YPOOFIT app and follow the on-screen prompts to log in or create an account.
- 3.Open the app and tap the Bluetooth icon on the homepage. The app will automatically search for your treadmill.
- 4. Important: Please allow the app to handle the connection. Do not connect manually to any treadmill-related device via your phone's system settings.

  If the app cannot find your treadmill: Please try resetting the treadmill by turning it off and on again, then repeat the steps above.

  If you continue to experience issues, please contact us for further assistance.

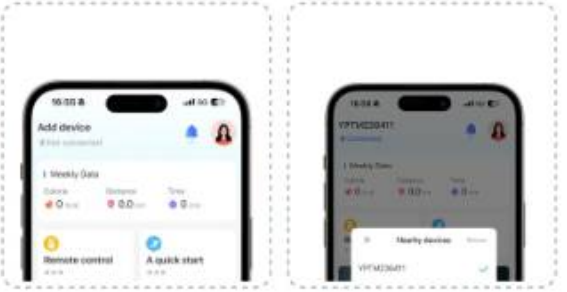

10. APP User Manual

Multi-Course Library

Access a wide variety of workout courses in the app, so you can choose the programs that best align with your fitness goals.



Personalized Training Plans

Set workout plans in the app, and the treadmill automatically adjust speed and time for a smooth, rhythmic workout.



Simulated Outdoor Workouts

Experience immersive, real-world walking scenarios with vivid outdoor scenery, bringing the feeling of outdoor exercise into your home.



11. Care And Maintenance

A. Symptom : Walking Belt is Off-Center or Slipping.

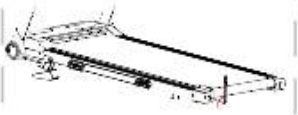

Figure 1

Walking Belt is Off-Center or Slipping:

1. Check Direction: Run the treadmill empty at low speed (2MPH). Observe which direction the belt drifts (left or right).
2. Power off appliance and unplug the power cord
3. Manual Centering:
   - If the belt drifts left, use the provided hex tool to turn the left idler roller screw clockwise ¼ of a turn (refer to Figure 1).
   - If the belt drifts right, use the provided hex tool to turn the right idler roller screw clockwise ¼ of a turn (refer to Figure 2).
4. Appliance MUST work 1-2mintutes. Repeat manual centering process untill the walk belt is centered.

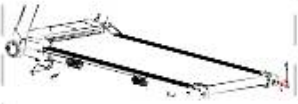

Figure 2

Walking Belt Slipping Correction:

1. Power off appliance before operation.
2. Using the hex tool, turn both idler roller screws clockwise 1/2 of turn(refer to figure 3)
3. After corrected, please plug in the treadmill and walk on it at under 1 MPH for 1–2 minutes to check for slipping. Repeat the tightening process until the belt stays securely in place.



Figure 3

Attentions

1. Remove any debris around the treadmill before maintenance to prevent injury.
2. Always use the hex tool provided with the treadmill.
3. Be careful during maintenance and avoid pinching your fingers.

B: Lubricating oil (MANUAL OIL)



- The treadmill is oiled when leaving the factory, but lubricity of treadmill shall be inspected frequently, which helps to keep it in optimum state. The treadmill must be oiled after 1 year or running for 100h.
- Lift one side of the running belt and touch the surface of running platform after running for 30h or 30 days. It is unnecessary to lubricate if there is silicone oil, if the surface is clearly dry, please oil it as instructed below.
- As shown in the figure, it needs to open the oil cap, pour the silicon oil into the oil port, after finished,turn on the treadmill to run for some time.

Notes: 1. Ensure the treadmill is stopped and the running belt is stationary during oiling.
2. Use only non-petroleum silicone oil to prevent damage to the platform and belt.

11. Care And Maintenance

C: Appliance cleaning.



- Power Off & Unplug: Turn off the treadmill and unplug the power cord before cleaning.
- Wipe Down: Use a soft, damp cloth to wipe the treadmill frame and console. Do not use acidic or caustic detergents, as they can damage the surface.
- Cleaning Note: Do not clean the underside of the walking belt.
- Normal Observation: A small amount of black residual powder under the treadmill during operation is normal and comes from belt friction.

Storage:

Storage: please place your treadmill in clean and dry environment, and ensure that power switch is off and plug is not in power socket.

Movement and folding:

handling wheel is added in design to move the treadmill. Please confirm that power is off and the body of treadmill is folded before moving.

Note:

Stop the treadmill to make the running belt still when oiling the running belt.And please use non-petroleum silicone oil.

12. Warranty

MANUFACTURER'S LIMITED WARRANTY

We warrant to the original purchaser that this product is free from defects in material and workmanship when used for its intended purpose, under the conditions that it has been installed and operated in accordance with the owner's manual.

LENGTH OF WARRANTY

1. Warranty Coverage
We offer a comprehensive **One-Year Limited Warranty** from the date of purchase.

2. Customer Support
Access **24/7 Online Customer Service** for immediate assistance.

Service Details During Warranty Period:

- We provide detailed troubleshooting and technical support or other remedies that do not require you to return the product.
- Should a defect arise from materials or workmanship, we will supply replacement parts free of charge.

EXCLUSIONS FROM WARRANTY COVERAGE

YPOO does not warrant against, and shall not be responsible for, any product failure, malfunction, or damage attributable to the following:

1. Improper installation and/or failure to follow the installation instructions.
2. Use of the product beyond normal home use, or use in an application for which it was not designed.
3. Cosmetic damage, including but not limited to scratches, scuffs, or discoloration.
4. Damage caused by normal wear and tear, vandalism, accidents, or acts of nature.
5. Acts of nature or environmental conditions, including but not limited to fire, flooding, snow, ice, hurricanes, earthquakes, lightning, corrosion, mold, mildew, or staining from foreign substances such as dirt, grease, or oil.
6. Normal weathering due to exposure to sunlight, weather, or atmospheric conditions, which may cause surfaces to fade, chalk, accumulate dirt, or stain.
7. Improper operation, alteration, handling, storage, abuse, or neglect of the product.

12. Warranty

WARRANTY SERVICE STATEMENT

Under normal home use conditions, YPOO, at its sole discretion, will repair or replace, free of charge, any part(s) proven to be defective.

Any repair or replacement does not extend or renew the original warranty period; coverage will apply only to the remaining portion of the original product warranty.

This warranty is valid only for the original purchaser and is non-transferable. Proof of original purchase is required to process all warranty claims.

INFORMATION REQUIRED FOR REPLACEMENT PARTS

When requesting replacement parts, please have the following information available:

1. Order ID;
2. Description of the part(s) (photos or videos are helpful);
3. Part number;
4. Date of purchase;

13. Workout Guide

This routine helps improve flexibility and reduce muscle tension. Remember to perform each stretch gently and avoid bouncing or pushing too hard.



1. Stretch Down:

Slightly bend your knees and slowly bend your body downward.Relax your back and shoulders, and try to extend your hands toward your toes.Hold for 10–15 seconds, then rest for a few seconds. Repeat 3 times.



2. Hamstring Stretch:

Sit on a clean mat. Straighten one leg, and bend the other leg inward so that the sole of the foot rests against the inner thigh of the straightened leg.

With the hand on the same side, reach toward the toes of the straightened leg.

Hold for 10–15 seconds, then rest for a few seconds. Switch legs and repeat.



3. Calf & Achilles Stretch:

Stand facing a wall with both hands placed against it.

Step one foot forward and keep the back leg straight, with both heels flat on the floor, while leaning toward the wall.

Hold for 10–15 seconds, then rest for a few seconds.

Repeat 3 times for each leg.



4. Quadriceps Stretch:

Hold your body steady by placing one hand against a wall.

With the other hand, reach back to grasp the ankle of the same leg and gently pull it toward your hip until you feel a stretch in the front of your thigh.

Hold for 10–15 seconds, then rest for a few seconds. Switch legs and repeat.



5. Inner thigh stretch:

Sit on the floor with the soles of your feet pressed together and your knees gently lowered toward the floor.

Hold for 10–15 seconds, then rest for a few seconds.

Repeat 3 times.

Sport makes me different

IMPORTANT: Read all instructions carefully before using this product. Retain this owner's manual for future reference. The specifications of this product may vary from this photo, subject to change without notice.

Email: support@ypoofitness.com
Hot line: 1-844-977-0007

support@ypoofitness.com