Parts:

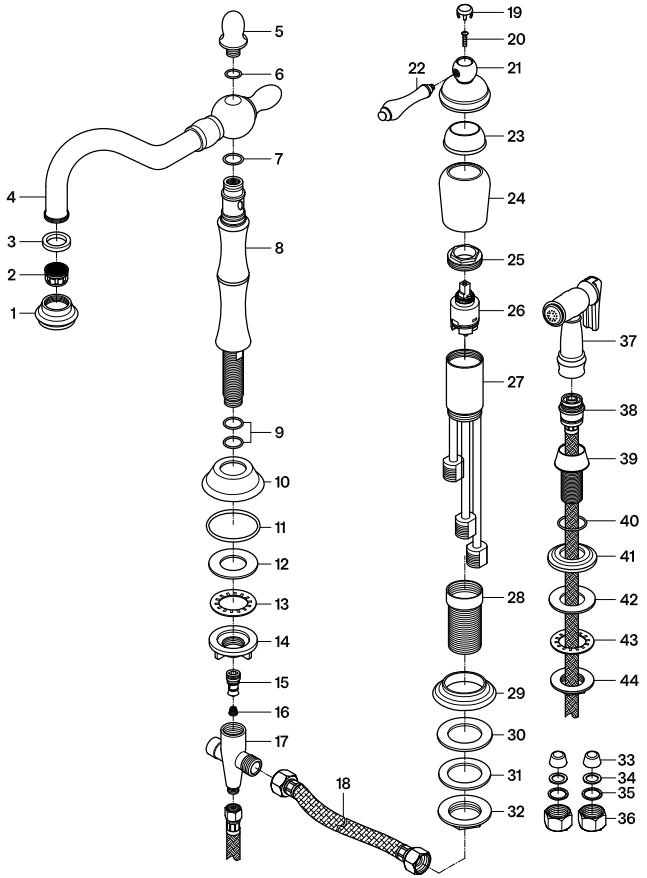

Replacement Parts:

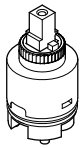

Cartridge: KSRP1811C



Handle: KSH1811AL

KINGSTON

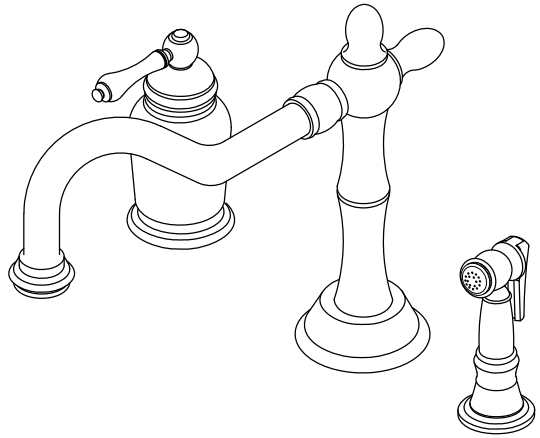

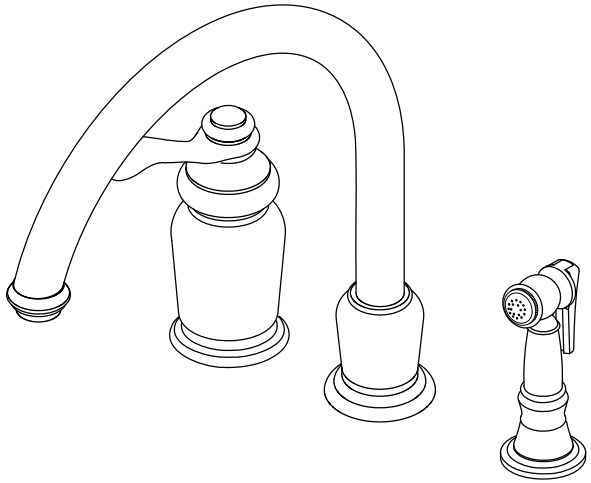

CARE AND MAINTENANCE OF YOUR FAUCET

Your KINGSTON faucet has been finished to the most strict standards; however, due to the high content of minerals in the water, your finish may appear dull and tarnished after time. These are some do's and don'ts to maintain the luster on your faucet for many years to come.

DO
1. Use a silicon based caulking when installing.
2. Clean your faucet with only a mild soap and water solution.
3. Dry your faucet after using it.
4. Give it a coat of Carnauba Wax periodically.

DON'T
1. Use plumbers putty when installing the faucet.
2. Use any abrasive cleaning agents.

It may seem like a very simple and short list but it is that simple to maintain your faucet, looking shiny and new.

If your faucet is already looking somewhat dull and tarnished, before replacing it, try cleaning it with a 50/50 solution of vinegar and water, you may need to soak some rags and wrap around those stubborn areas, leave
overnight and rinse completely in the morning, apply Carnauba wax once you have removed the mineral deposits.

Parts:

Lock Nut	Cone Washer & Coupling Nut
	
	
1 Pc	2 Pcs

www.kingstonbrass.com

TOLL-FREE CUSTOMER SERVICE: 1-877-2-KBRASS
TECHNICAL SUPPORT E-mail: service@kingstonbrass.com
12775 Reservoir Street, Chino, CA 91710

NOTICE

Failure to follow all directions may cause leaks which may result in water damage

KINGSTON

INSTALLATION INSTRUCTIONS

Widespread Single Handle Kitchen Faucet with or without Sprayer

BEFORE BEGINNING INSTALLATION:

1. Flush plumbing lines to clear any debris.
2. Shut off both supply lines after flushing.

Need Tools:

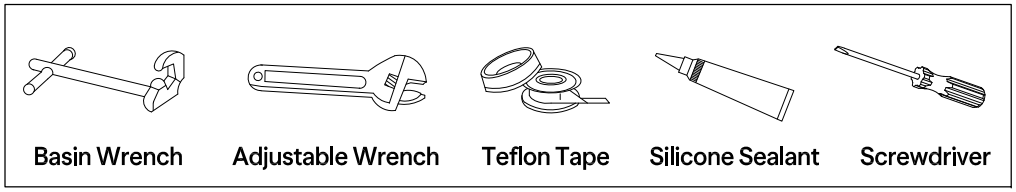

1

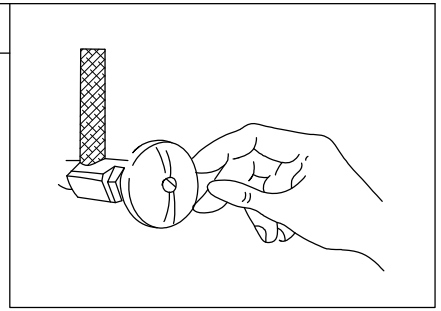

1. Shut off hot and cold water supply under sink. Plug sink drain with cloth to avoid losing small parts. Remove old faucet.

2

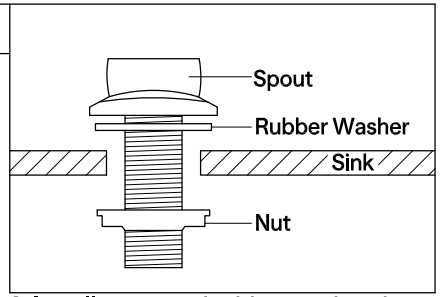

2. Install spout and rubber washer through sink. Be sure to keep rubber washer above the sink surface. Attach nut to spout and hand tightens from underneath sink. Be careful not to over tighten.

5

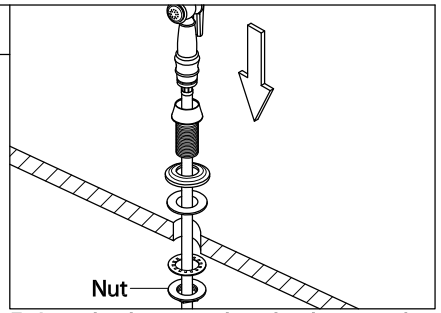

5. Attached sprayer head to hose and hand tightens only. Teflon tape is not required. Drop sprayer hose through hose guide and let it rest in place.

3

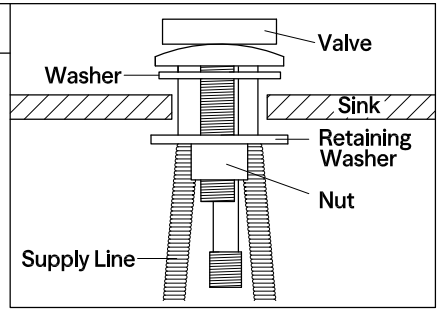

3. Install Valve. Insert valve through sink. Position valve so that the longer supply line is on the left side.
Place retainer washer over the threaded stem and thread nut into place.
Tighten nut using adjustable wrench.
Be sure to keep rubber washer above the sink surface.

4

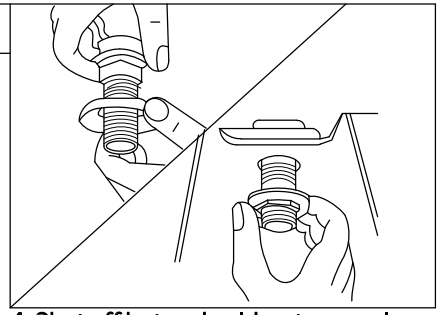

4. Shut off hot and cold water supply under sink. Plug sink drain with cloth to avoid losing small parts. Remove old faucet.

Warning!!!

- Do not over-tighten nut during installation.
- Over-tighten may crack the valve and cause severe leak.

6

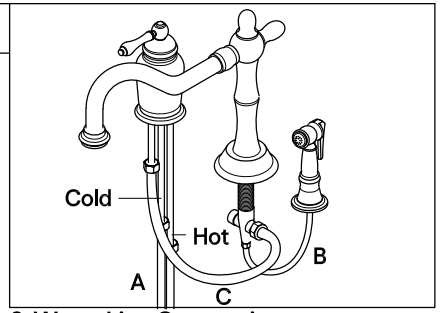

6. Water Line Connections
   A. Connect hot and cold water supply line to faucet.
   B. Connect sprayer hose to the partially threaded inlet stem on the faucet valve.
   C. Connect small end of metal braided hose to the faucet valve. Connect other end of hose to the spout.

Tighten all connections securely with a wrench. Be careful not to over tighten.

CAUTION: If faucet supply lines need to be bent, grip tubes at point of bending and slowly pull tube into position. Extreme care must be exercised. Kinked tubes will void the warranty.

7

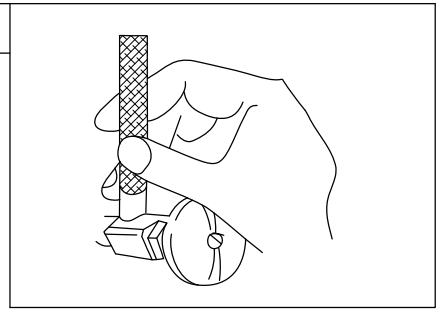

7. Turn on water supply valves and check for leaks, especially all supply line connections.

NOTE 1: If additional adapters or supply tubes are required, you can purchase them from the store where you bought the faucet.

NOTE 2: Adapter parts are not included in the package.

8

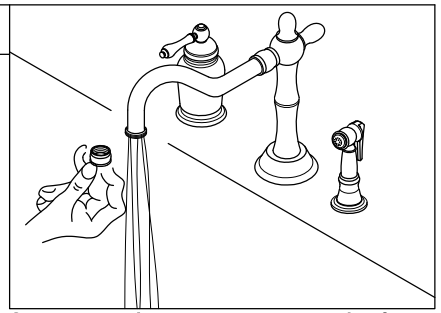

8. Remove the aerator, turn on the faucet, let water run for at least one minute, this will clear any debris left in the line, reinstall aerator.

9

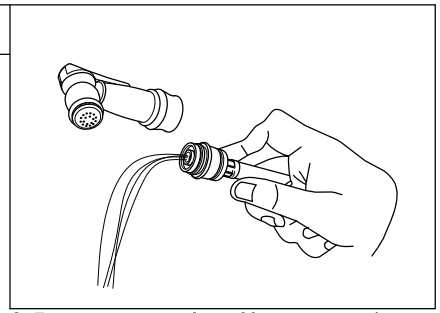

9. Remove spray head by unscrewing the sprayer in a counter clockwise direction, turn on both hot and cold valves and let water run for at least one minute, this will clear any debris left in the line.

©2025 LVC Kingston LLC. All Rights Reserved.
2025-05-KB

KINGSTON

Kitchen Side Sprayer
Installation Instructions

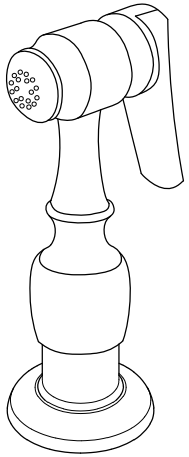

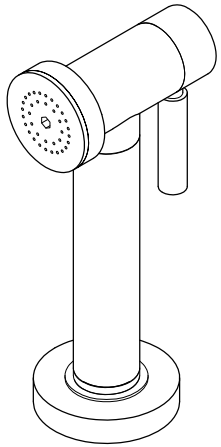

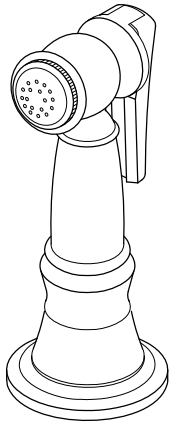

NOTICE

Failure to follow all directions may cause leaks which may result in water damage

www.kingstonbrass.com

TOLL-FREE CUSTOMER SERVICE: 1-877-2-KBRASS
TECHNICAL SUPPORT E-mail: service@kingstonbrass.com
12775 Reservoir Street, Chino, CA 91710

Installation Step:

1

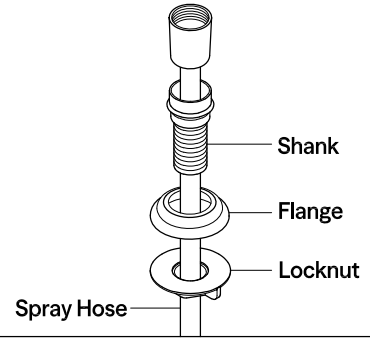

1. For model with spray head and hose, place the spray guide through the fourth hole in the sink, screw the locknut onto the shank and tighten firmly.

2

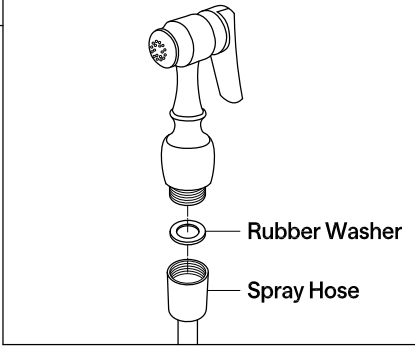

2. Place rubber washer to end of spray hose and attach sprayer.

3

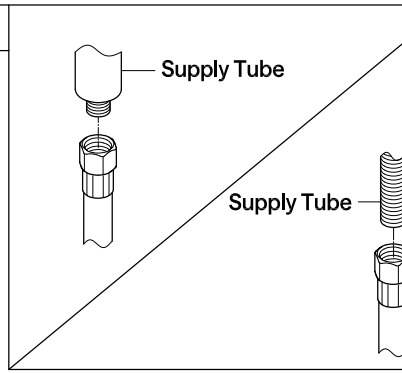

3. Connect spray hose to hose outlet located underneath the faucet.

4

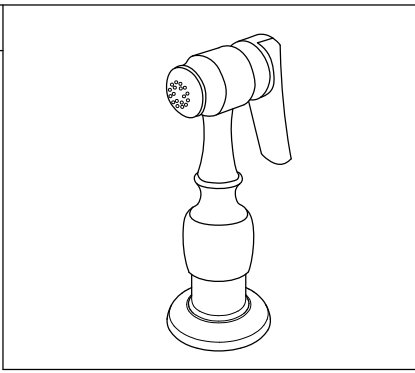

4. Set sprayer on base and sprayer is ready to use.

Fitment and Compatibility Disclaimer :

Kingston Brass, Inc. assumes no liability related to the product use and fitment of this product. Buyers are solely responsible to insure that product use and fitment are consistent with our Kingston Brass, Inc. guidelines. Kingston Brass, Inc. is unable to guarantee the compatibility of its products, including Side-Sprays, with other brands. This product is intended for use as a replacement or update part to the appropriate Kingston Brass side spray-compatible kitchen faucet. This item should never be installed directly to a supply line, stop valve or any other continuously flowing/pressurized source.

©2025 LVC Kingston LLC. All Rights Reserved.

2025-05-KB

Side Sprayer Aerator Cleaning Tips

An insufficient flow of water is usually the result of blockage. The most common cause for blockage in not just kitchen faucets but sprayers also is the build-up of mineral deposits which is collected in the supply hose, the shutoff valve, the faucet valve, or the aerator. For the side sprayer most of the time the blockage comes from the aerator. There is a possibility that the build-up can occur in the hose as well.

To clean the aerator:

1. Remove the spray head by hand or wrench (if needed) and check to see if there are any debris. Clean as needed.



2. Clean thoroughly. This should remove all debris that may be in the spray head or in the aerator.

