

Installation Manual

Document Number: SM1024

Revision 1.2

Sunlighten, Inc. Global Headquarters

10975 El Monte Street

Leawood, KS 66211

www.sunlighten.com

Toll Free: 877-292-0020 Local: 913-754-0831

Installation Manual
Document Number: SM1024
Revision 1.0
Copyright © 2025-2026

Sunlighten, Inc. Global Headquarters
10975 El Monte Street
Leawood, KS 66211
www.sunlighten.com
Toll Free: 877-292-0020 Local: 913-754-0831

Sunlighten reserves the right to change the contents of this manual at any time. It is the customer/user's responsibility to contact Sunlighten's Customer Care Department or visit Sunlighten's website to see if the contents of your manual have changed.


sunlighten
LIGHT FOR LIFE

About this Manual

This manual covers the installation of the Sunlighten, Incorporated (hereinafter referred to as “Sunlighten”, or “the company”) Custom Saunas (herein referred to as “the sauna”, “the system”, or “the unit”). While this manual covers installation of the Sunlighten Custom Sauna, it is essential that skilled workers install this unit per local codes/requirements. Sunlighten is not responsible for unqualified installers and/or incorrect practices.

When reading this manual, take note of the following special text blocks:

NOTE or NOTICE
Information that should be read.

CAUTION
Contains information that if not followed, may cause damage to Sunlighten and/or other equipment.

WARNING
Contains information that if not followed, may cause bodily injury and/or cause damage to Sunlighten and/or other equipment.

DANGER
Contains information that if not followed, will cause bodily injury or death to the installer or others.

Danger, Warning, and Caution boxes will show the type of damage (left side) and may show action items (right side).

Table of Revisions

Revision	Date	Description
1.0	26 March 2025	Initial release.
1.1	29 July 2025	Revised figures. Reformatted document.
1.2	19 January 2026	Added 10-Gauge wire recommendation, Section 4.3.2.

Table of Contents

About this Manual 3
Table of Revisions 3
Table of Contents 4
List of Figures 6
List of Tables 7
1 Introduction 9
1.1 Overview 9
1.2 References and Abbreviations 9
1.3 Certifications 11
1.4 Errors or Omissions 11
2 Before Installation 13
2.1 Overview 13
2.2 Custom Infrared Sauna Inventory 13
2.3 Sunlighten Sauna Design Documentation 14
2.4 Milled Wood Components 14
2.4.1 Tongue-and-Groove Cut List 15
2.4.2 Trim Board Cut List 16
2.4.3 Heater Cabinetry 17
2.4.4 Bench Slats 22
2.4.5 Bench Support Boards 23
2.5 Electronic Equipment 24
2.5.2 SoloCarbon Heater Panel 26
2.5.3 Heater Circuits 26
2.5.4 (Optional) Chromotherapy 31
3 Sauna Components 33
3.1 Overview 33
3.2 Walls 35
3.2.1 Semi-Attached Door Wall 36
3.2.2 Semi-Attached Wall 38
3.2.3 Attached Walls 38
3.2.4 Roof/Ceiling 39
3.2.5 Accessories 40
4 Installation Instructions 43

4.1 Overview 43
4.2 Pre-Installation 44
4.3 Location 44
4.3.1 Walls and Ceiling/Roof 44
4.3.2 Electrical Connections 45
4.3.3 Heater Box 48
4.3.4 (Optional) Chromotherapy Lighting Package 48
4.3.5 Finishing the Inside of the Sauna 51
4.3.6 Mounting the FS Heater Enclosure 52
4.3.7 Custom Sauna Bench 52
4.3.8 (Optional) Tempered Glass Door 53
5 Operation 55
5.1 Pre-Operation 55
5.2 Sauna Control Panel(s) 56
5.3 Operation 57
5.4 Warm-Up Time and Usage Guidelines 57
5.4.1 4-Hour Timer Mode 58
5.4.2 Reservation Mode 58
5.5 Sauna Protocol 59
5.5.1 Pre-Sauna Session 59
5.5.2 Sauna Sessions 59
5.5.3 Post-Sauna Sessions 59
5.6 Health and Safety 60
5.6.1 Important Safeguards 60
5.6.2 Precautions 60
5.7 Using Chromotherapy 61
5.8 Frequently Asked Questions (FAQs) 61
6 Maintenance and Troubleshooting 63
6.1 Maintenance 63
6.2 Troubleshooting 64
7 Warranty 65
7.1 Return Policy 65
7.2 Shipping and Handling Fee 66

List of Figures

Figure 1. Tongue-and-Groove Milled Wood 15
Figure 2. Trim Board 16
Figure 3. H1D Enclosure 18
Figure 4. H1B Enclosure 19
Figure 5. H2B Enclosure 20
Figure 6. FS Enclosure 21
Figure 7. Bench Slats 22
Figure 8. Bench Support Boards 23
Figure 9. Heater Panel 25
Figure 10. FS Heater Assembly 25
Figure 11. Single Heater Circuit 27
Figure 12. Double Heater Circuit 28
Figure 13. 240V 30A Wiring Diagram 29
Figure 14. Wire Nut Connectors 29
Figure 15. Sauna Power Control Panel 30
Figure 16. Sauna Control Cable 30
Figure 17. Temperature Sensor Cable 31
Figure 18. Chromotherapy Package Components 32
Figure 19. Semi-Attached Door Wall 37
Figure 20. Semi-Attached Wall 38
Figure 21. Attached Wall Assembly 39
Figure 22. Door Assembly 40
Figure 23. (Optional) Chromotherapy Lighting Package 41
Figure 24. Power Connection 46
Figure 25. Common Connections 46
Figure 26. Neutral Connections 47
Figure 27. Ground Connection 47
Figure 28. (Optional) Chromotherapy Lighting Package 49
Figure 29. Fastening the Tongue-n-Groove boards. 51
Figure 30. Mounting the FS Heater Enclosure 52
Figure 31. Sauna Control Panel 56

List of Tables

Table 1. Milled Wood Component Part Numbers 14
Table 2. Tongue-and-Groove Milled Wood Dimensions and Part Numbers 16
Table 3. Trim Board Milled Wood Dimensions and Part Number 17
Table 4. Heater Cabinetry Dimensions and Part Numbers 17
Table 5. H1D Enclosure Parts 18
Table 6. H1B Enclosure Parts 19
Table 7. H2B Enclosure Parts 20
Table 8. FS Enclosure Parts 21
Table 9. Bench Slats Dimensions and Part Number 22
Table 10. Bench Support Boards Dimensions and Part Number 23
Table 11. Heaters 25
Table 12. FS Heater Components 25
Table 13. Sauna Control Cable 31
Table 14. Chromotherapy Package 32
Table 15. Suggested Wall Types 35
Table 16. Wall Components 37
Table 17. Door Assembly Components 40
Table 18. Chromotherapy Package 49
Table 19. Maintenance Intervals 63
Table 20. Troubleshooting Issues 64


sunlighten
LIGHT FOR LIFE

1 Introduction

1.1 Overview

This manual discusses the installation of a Sunlighten custom Sauna. Refer to the following information:

NOTICE

This manual is intended for the customer to be supplied to the installer(s), and may not be modified, copied, redistributed, retransmitted, reproduced, republished, transferred, or resold without consent of Sunlighten, Inc. All rights reserved.

WARNING



It is the customer/user's responsibility to check the Sunlighten system on a regular basis to ensure all items are properly fastened, connected, and in serviceable condition. Replace or repair (by a licensed technician per local codes) any aforementioned items. Contact Sunlighten for replacement parts.

DANGER



Do not perform any maintenance on the unit without first shutting off power, to include locking out and tagging out (LOTO). power at the electrical panel.



NOTICE

Any item shown that is not provided by Sunlighten is done so for illustrative purposes only. All items needed that are not provided by Sunlighten are to be procured by skilled tradespeople per all codes and using best practices.

1.2 References and Abbreviations

A – Amp(s)

AC – Alternating Current

AWG – American Wire Gauge

BOL – Bill of Lading

BOM – Bill of Materials

C – Celsius

CAD – Computer Aided Drafting

D - Depth

DC – Direct Current

EMF – A type of radiation energy.

F – Fahrenheit

FAQ/FAQs – Frequently Asked Question(s)

FIR – Far Infrared

FR – Fire Retardant as in Fire Retardant Plywood

FS – Full Spectrum Heater

Gauge – the diameter of a wire.

H – Lumber Height

l – Liter

L – Lumber Length

NEC – National Electrical Code

oz - Ounce

Pitch/Pitched – on an angle, not horizontal or vertical.

QTY – Quantity

R-Value – an insulating material's resistance to the transfer of heat.

THK – Lumber Thickness

T&G – Tongue-and-Groove

V – Volt(s)

VAC – AC Volts

W – Watt(s)

W – Lumber Width

ºC – Degrees Celsius

ºF – Degrees Fahrenheit

Ω - Ohms

1.3 Certifications

The ETL Listed Mark is proof of product compliance (electrical, gas, and other safety standards) to North American safety standards. Authorities Having Jurisdiction (AHJs) in 50 states and Canada, and retailers accept the ETL Listed Mark as proof of product safety.



Sunlighten adheres to the following for compliance:



1.4 Errors or Omissions

In the event of errors or omissions, contact:

Custom Sauna Customer Care Department
(877) 292-0200 Ext. 304
zlove@sunlighten.com


sunlighten
LIGHT FOR LIFE

2 Before Installation

2.1 Overview

Sunlighten ships the system in properly protective shipping crates.

If any crates arrive damaged, take photos, and discuss this with the freight carrier. Also contact Sunlighten immediately.

Upon arrival, all crates (internal and external) must be opened within 48 hours. Inventory all items and check that they are present and serviceable. Contact Sunlighten if there are any issues. The warranty on damaged delivery items expires after 48 hours.

If the crate(s) are to be stored, make sure they are in a safe/dry place, and do not stack anything on top of them.

NOTE
Crates must be opened within 48 hours of arrival to inventory. Any damaged/unserviceable items reported after 48 hours will not be covered under warranty.

Materiel counts must be verified within 30 days of arrival. If any items reported missing after this 30-day period, the customer will be responsible for payment and shipping of those items.

NOTE
Materiel counts must be verified within 30 days of arrival. If any items reported missing after this 30-day period, the customer will be responsible for payment and shipping of those items.

2.2 Custom Infrared Sauna Inventory

Custom Infrared Sauna Installation Kit includes:

- Sunlighten Sauna Design Documentation
- Sunlighten Milled Wood Components (requires final fitting)
- Electronic power and control boards with subsequent peripherals (excludes wires and connectors).
- Sunlighten’s patented far infrared (FIR) SoloCarbon® heater panels.

2.3 Sunlighten Sauna Design Documentation

Sunlighten Sauna Design Documentation includes:

- Floor plan views.
- Elevation plan views.
- Bench and supports detailing views.
- Heater cabinetry detail views.
- Tailored cut lists. Sunlighten provides overview dimensions, and isolated dimensions of the general T&G area as well as benching, but only for general information. Final lengths and fitment will be determined and made on site by the contractors.
- Bill of Materials (BOM)
- Architectural Visualization(s) – these are per request and issued after a deposit is received.

2.4 Milled Wood Components

All Milled Wood Components included in the container is premium eucalyptus hardwood or basswood, responsibly sourced worldwide and shipped from Sunlighten's warehouse in Leawood, KS. Refer to Table 1 for part numbers.

Table 1. Milled Wood Component Part Numbers

Product	Part Number (#)
Eucalyptus (untreated or poly coating protective cover) or Basswood tongue-and-groove siding.	TNG10
Eucalyptus (untreated or poly coating protective cover) or Basswood bench slats.	BASS/EUCA05
Eucalyptus (untreated or poly coating protective cover) or Basswood heater cabinetry.	H1B, H2B, H1D, or FS
Eucalyptus (untreated or poly coating protective cover) or Basswood trim.	TB08201850
Eucalyptus (untreated or poly coating protective cover) or Basswood bench support boards.	BS410

- Premium Eucalyptus (untreated or poly coating protective cover) or Basswood heater cabinetry.
- Premium Eucalyptus (untreated or poly coating protective cover) or Basswood tongue-and-groove sauna siding.
- Premium Eucalyptus or Basswood (untreated or poly coating protective cover) bench slatting and wooden supports.
- Premium Eucalyptus (untreated or poly coating protective cover) or Basswood wood trim.
- All tongue-and-groove siding is dimensioned in roughly 2, 3, 4, 5, and 6-foot lengths to be cut to length for custom sauna paneling with accompanying Premium Eucalyptus (untreated or poly coating protective cover) or Basswood wood trim for concealing kerf lines, wood seams, and end-grain(s).

- Bench slats are dimensioned in roughly 4-foot and 6-foot lengths to be cut to length for custom sauna benching.
- Support Boards are dimensioned in roughly 18-inch, 3, 6, and 7-foot lengths to be cut to finished sizes by the contractor.

Items required, but not included for construction:

- Sauna Area Framing
- Insulation
- FR Plywood
- Wall Sheathing
- Fasteners
- Furring strips

2.4.1 Tongue-and-Groove Cut List

The cut list includes those pieces of tongue-and-groove milled wood as shown in Figure 1. Refer to Table 2 for dimensions.

Figure 1. Tongue-and-Groove Milled Wood

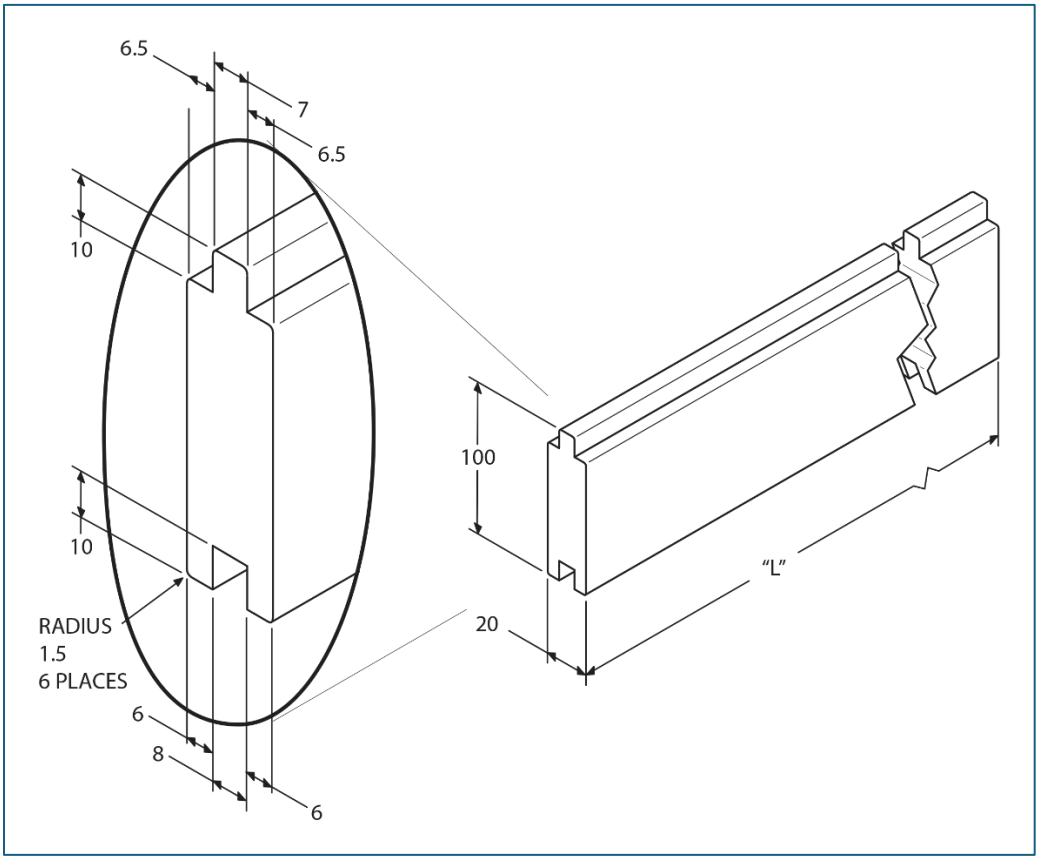

Table 2. Tongue-and-Groove Milled Wood Dimensions and Part Numbers

	THK (mm/in)	W (mm/in)	"L" (mm/ft)	Description	Part Number (#)
A	20mm (~.787in)	100mm (~3.93in)	600mm (~1.9ft)	Eucalyptus, Eucalyptus Poly Coated, or Basswood	TNG1060_EUCA/BASS
B	20mm (~.787in)	100mm (~3.93in)	1000mm (~3.2ft)	Eucalyptus, Eucalyptus Poly Coated, or Basswood	TNG10100_EUCA/BASS
C	20mm (~.787in)	100mm (~3.93in)	1250mm (~4.1ft)	Eucalyptus, Eucalyptus Poly Coated, or Basswood	TNG10125_EUCA/BASS
D	20mm (~.787in)	100mm (~3.93in)	1500mm (~4.9ft)	Eucalyptus, Eucalyptus Poly Coated, or Basswood	TNG10150_EUCA/BASS
E	20mm (~.787in)	100mm (~3.93in)	1850mm (~6.0ft)	Eucalyptus, Eucalyptus Poly Coated, or Basswood	TNG10185_EUCA/BASS

2.4.2 Trim Board Cut List

The Trim Board includes those pieces of Eucalyptus or Basswood (see Figure 2) The dimensions are as shown in Table 3.

Figure 2. Trim Board

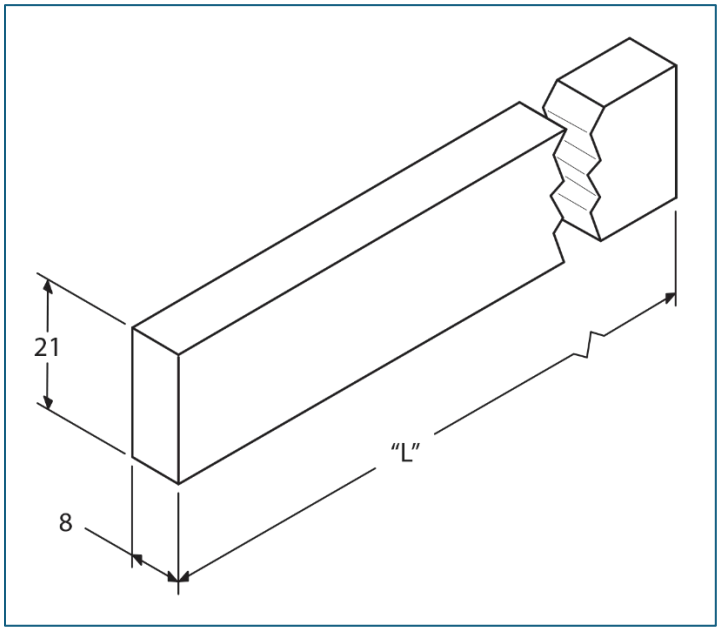

Table 3. Trim Board Milled Wood Dimensions and Part Number

THK (mm/in)	W (mm/in)	L (mm/ft)	Description	Part Number (#)
8mm (~.314in)	20mm (~.787in)	1850mm (~6.0ft, .835in)	Eucalyptus, Eucalyptus Poly Coated, or Basswood	TB08201850

2.4.3 Heater Cabinetry

Heater Cabinetry encloses and gives a finished look to the heaters. There are four models of Heater Cabinets available in Eucalyptus or Basswood. These include (refer to the table below):

Table 4. Heater Cabinetry Dimensions and Part Numbers

D (mm/in)	W (mm/in)	H (mm/ft)	Description	Part Number (#)
48mm (~1.89in)	270mm (~10.6in)	1080mm (~3.54ft.835)	Eucalyptus, Eucalyptus Poly Coated, or Basswood	H1D
48mm (~1.89in)	270mm (~10.6in)	1080mm (~3.54ft.835)	Eucalyptus, Eucalyptus Poly Coated, or Basswood	H1B
48mm (~1.89in)	910mm (~35.2in)	1080mm (~3.54ft.835)	Eucalyptus, Eucalyptus Poly Coated, or Basswood	H2B
208.78mm (~8.22in)	208.78mm (~8.22in)	1044.96mm (~41.14in)	Eucalyptus, Eucalyptus Poly Coated, or Basswood	FS

WARNING



FS Heater Cabinets must be configured so the electrical connections are at the bottom of the cabinet, and no wires run across the heaters. The heaters may cause heat damage to or melt the wiring.

- H1D – The smallest size heater enclosure.
- H1B – The medium size heater enclosure.
- H2B – The largest size heater enclosure.
- FS – The FS is used in conjunction with the Full Spectrum Heater. It is mounted anywhere where two walls, a wall and the floor, or a wall and the ceiling come together. It may be oriented vertically or horizontally. If mounted vertically, the electrical wires must be routed to the heater on the lower side., on the floor or ceiling.

Refer to the following figures and tables:

Figure 3. H1D Enclosure

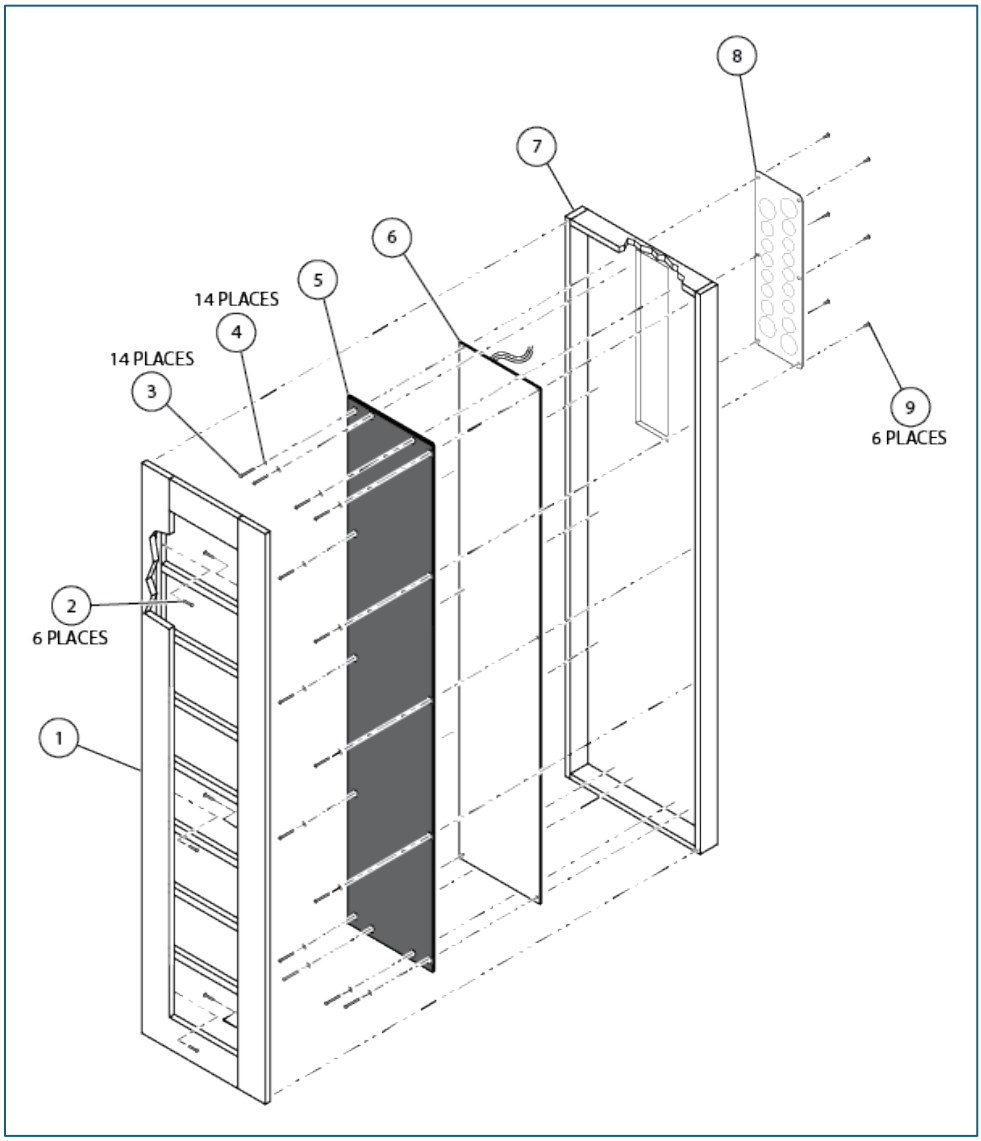

Table 5. H1D Enclosure Parts

Item	Quantity	Description
1	1	H1D Heater Faceplate, Eucalyptus or Basswood
2	6	Fastener, Medium
3	14	Fastener, Long
4	14	Washer
5	1	Protective Covering, Infrared Boosting CELLIANT®-Infused Fabric
6	1	SoloCarbon Heater
7	1	H1D Enclosure
8	1	Electrical Connection Plate
9	6	Fastener, Short

Figure 4. H1B Enclosure

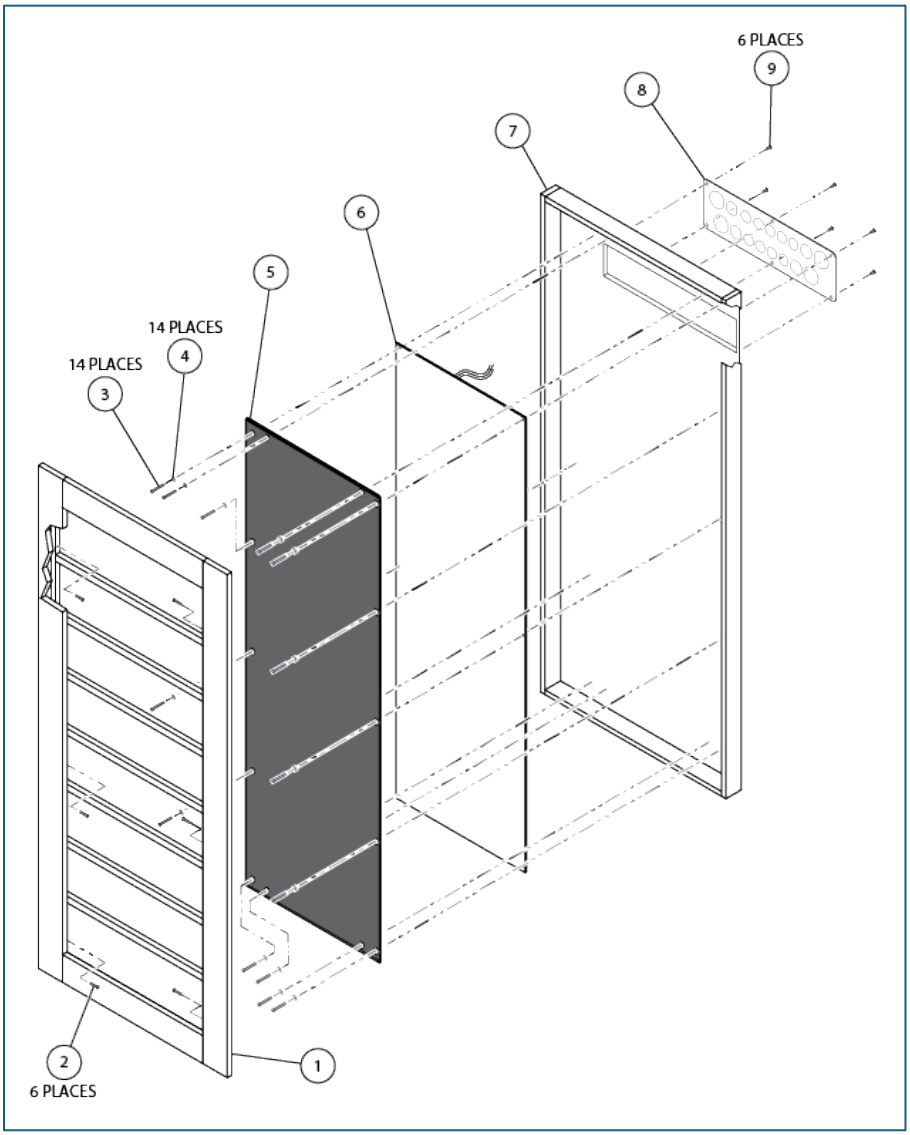

Table 6. H1B Enclosure Parts

Item	Quantity	Description
1	1	H1B Heater Faceplate, Eucalyptus or Basswood
2	6	Fastener, Medium
3	14	Fastener, Long
4	14	Washer
5	1	Protective Covering, Infrared Boosting CELLIANT®-Infused Fabric
6	1	SoloCarbon Heater
7	1	H1B Enclosure
8	1	Electrical Connection Plate
9	6	Fastener, Short

Figure 5. H2B Enclosure

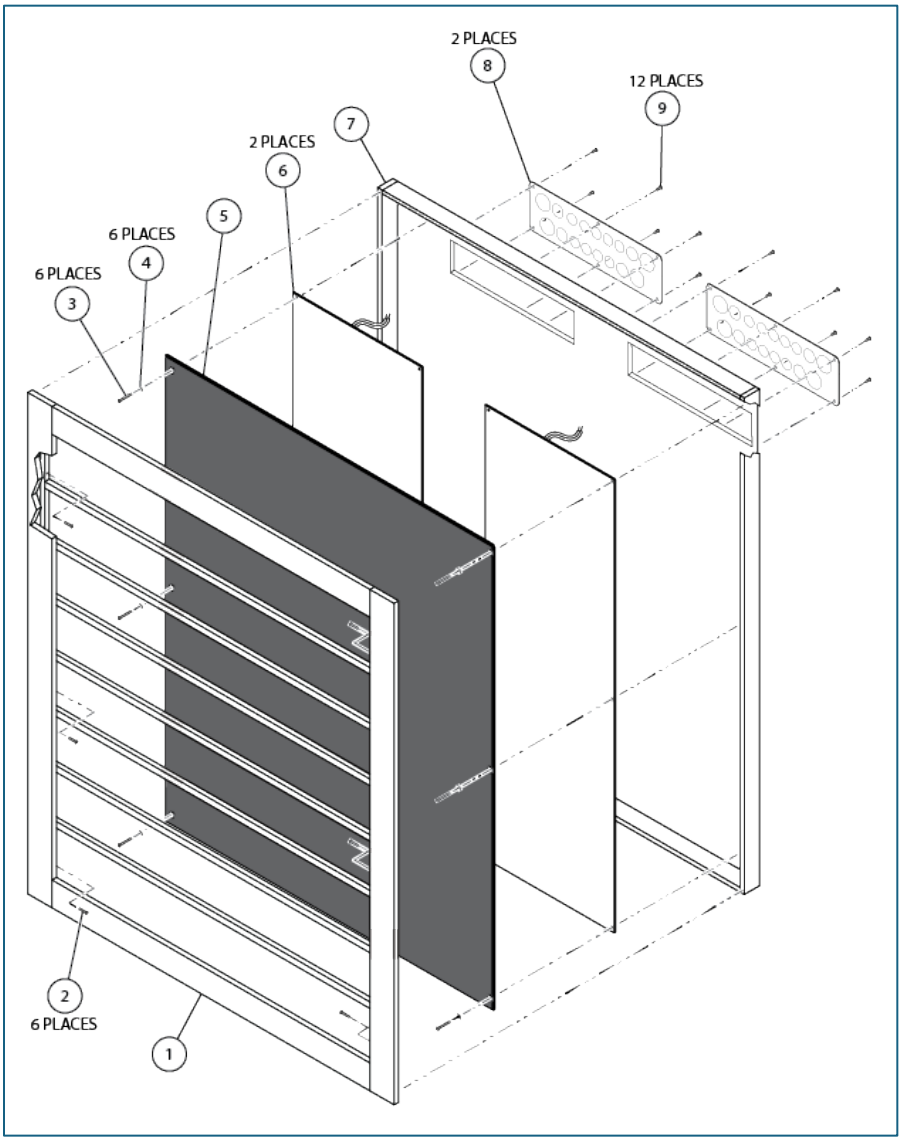

Table 7. H2B Enclosure Parts

Item	Quantity	Description
1	1	H1B Heater Faceplate, Eucalyptus or Basswood
2	6	Fastener, Medium
3	6	Fastener, Long
4	6	Washer
5	1	Protective Covering, Infrared Boosting CELLIANT®-Infused Fabric
6	2	SoloCarbon Heater
7	1	H1B Enclosure
8	2	Electrical Connection Plate
9	12	Fastener, Short

Figure 6. FS Enclosure

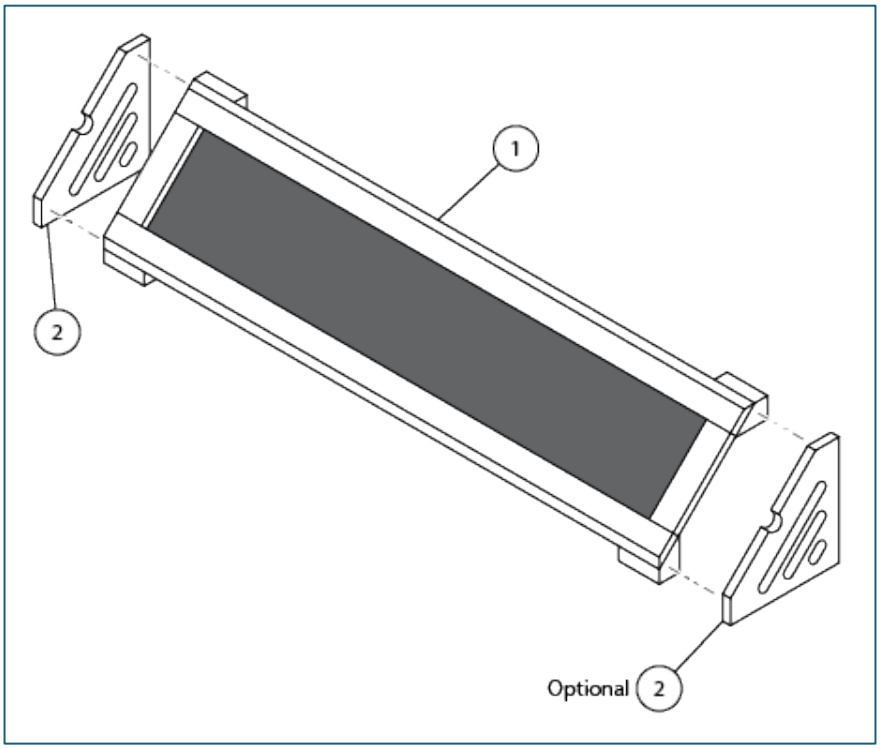

Table 8. FS Enclosure Parts

Item	Quantity	Description
1	1	FS Heater Enclosure, Eucalyptus or Basswood
2	1*	FS Heater End Cap, Eucalyptus or Basswood

* The FS is shipped with one (1) End Cap. If an additional End Cap is required for aesthetic purposes, one will be shipped free of charge. Two (2) will be shown in the design drawings.

NOTE

The FS is shipped with one (1) End Cap. If an additional End Cap is required for aesthetic purposes, one will be shipped free of charge. Two (2) will be shown in the design drawings.

2.4.4 Bench Slats

The Bench Slats include are those pieces of Eucalyptus or Basswood (see Figure 7). The dimensions and part numbers are shown in Table 9.

Figure 7. Bench Slats

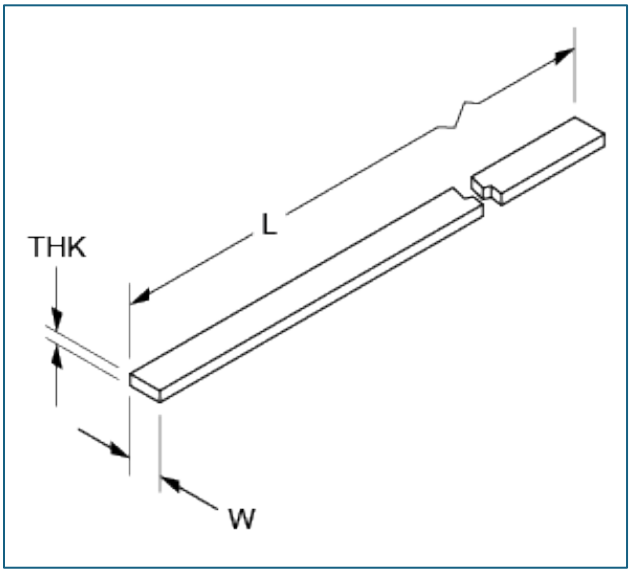

Table 9. Bench Slats Dimensions and Part Number

	THK (mm/in)	W (mm/in)	L (mm/ft)	Description	Part Number (#)
A	20mm (~.787in)	50mm (~1.96in)	1250mm (~4.10ft)	Eucalyptus or Basswood	BASS/EUCA05125
B	20mm (~.787in)	50mm (~1.96in)	1850mm (~6.06ft)	Eucalyptus or Basswood	BASS/EUCA05185

2.4.5 Bench Support Boards

The Bench Support Boards are cut as required to support the Bench Slats. These may be in Eucalyptus or Basswood (see Figure 8) and come in 1 ½- ,3-, 6-, or 7-foot lengths. The dimensions and part numbers are shown in Table 10.

Figure 8. Bench Support Boards

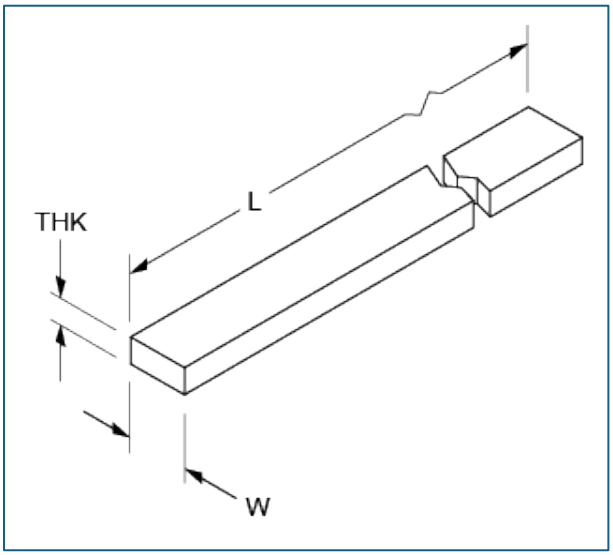

Table 10. Bench Support Boards Dimensions and Part Number

	QTY	T	W	L	Description	Part Number (#)
A	TBD	40mm	100mm	1.5’	Eucalyptus, Basswood, or Eucalyptus Poly Coated	TBD
B	1	40mm	100mm	3’	Eucalyptus, Basswood, or Eucalyptus Poly Coated	BS41095-E, BS41095-B, or BS41095-PC
C	1	40mm	100mm	6’	Eucalyptus, Basswood, or Eucalyptus Poly Coated	BS410185-E, BS410185-B, or BS410185-PC
D	1	40mm	100mm	7’	Eucalyptus, Basswood, or Eucalyptus Poly Coated	BS410215-E, BS410215-B, or BS410215-PC

E - Eucalyptus, B - Basswood, PC - Eucalyptus Poly Coated

2.5 Electronic Equipment

The Electronic Equipment includes:

- Sunlighten patented FIR SoloCarbon heater panels, provide therapeutic light and heat to the sauna.
- Infrared sauna control panel, providing the interface to the sauna via internal or external mounted control panels (control panel location is determined by design intent). Refer to sauna design documents for intended location.
- Sauna power control board and power cable, serves as the power supply relay between the electrical panel (AC power source), heater panels, and the control panel.

2.5.1 Sunlighten FIR SoloCarbon Heater Panels

The FIR SoloCarbon Heater Panels provide the infrared heat. They are rated at:

- 120 Volts
- H1D is fused to 2A
- H1B is fused to 4A
- H2B contains two (2) H1B panels, *each* fused to 4A

Heater panel is shown below:

NOTES
It is recommended to review the following sections in the National Electrical Code (NEC), Chapters 1, 2, 3, 4 and Part IX (Electric Radiant Heating Panels and Heating Panel Sets) before installation. Please secure any permits required by your locale prior to installation. Failure to do so will violate all Sunlighten warranties.

Figure 9. Heater Panel

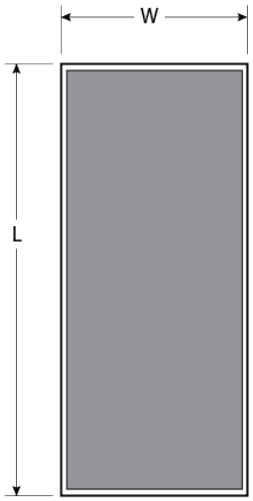

Table 11. Heaters

Product	Quantity	Size (Length x Width)
H1D	1	1000mm x 200mm (39.37” x 7.88”)
H1B	1	1000mm x 400mm (39.37” x 15.75”)
H2B	2	

Figure 10. FS Heater Assembly

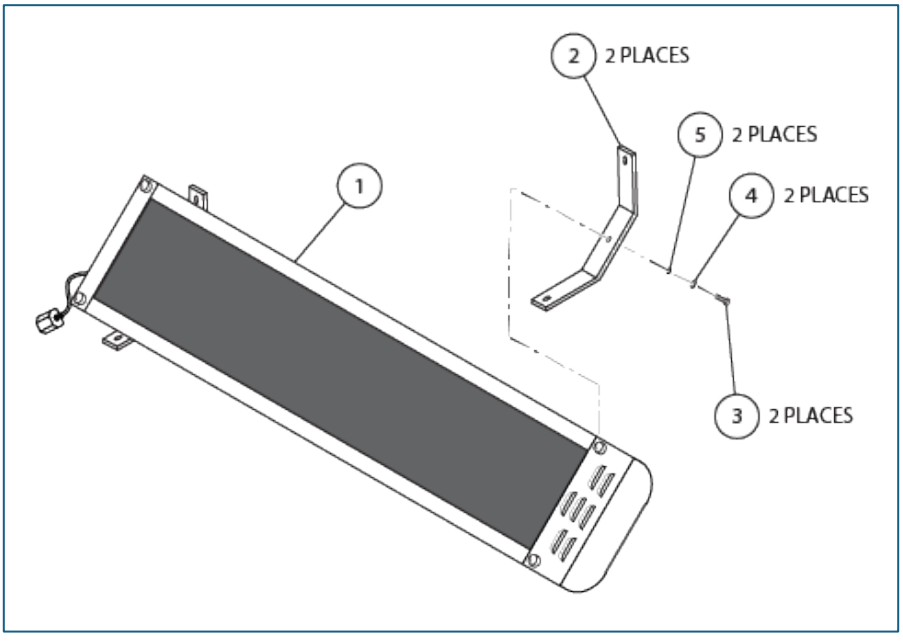

Table 12. FS Heater Components

Item	Quantity	Description
1	1	FS Heater

2	2	Bracket
3	2	Socket Head Cap Screw
4	2	Washer
5	2	Lock Washer

2.5.2 SoloCarbon Heater Panel

The SoloCarbon Heater Panel is used to power the SoloCarbon Heaters inside the wooden cabinets. Your kit may include one or two Heater Panels mounted inside an enclosure. The Heater Panel is shown in in Figure 9.

2.5.3 Heater Circuits

There are two styles of Heater Circuits. These include:

- Single Heater Circuit
- Double Heater Circuit

Heater Circuits include an enclosure cover (not shown)

2.5.3.1 Single Heater Circuit

The single circuit system is a method that controls any number of heaters totaling up to 5,500 Watts. The single circuit system is shown in Figure 11.

Figure 11. Single Heater Circuit

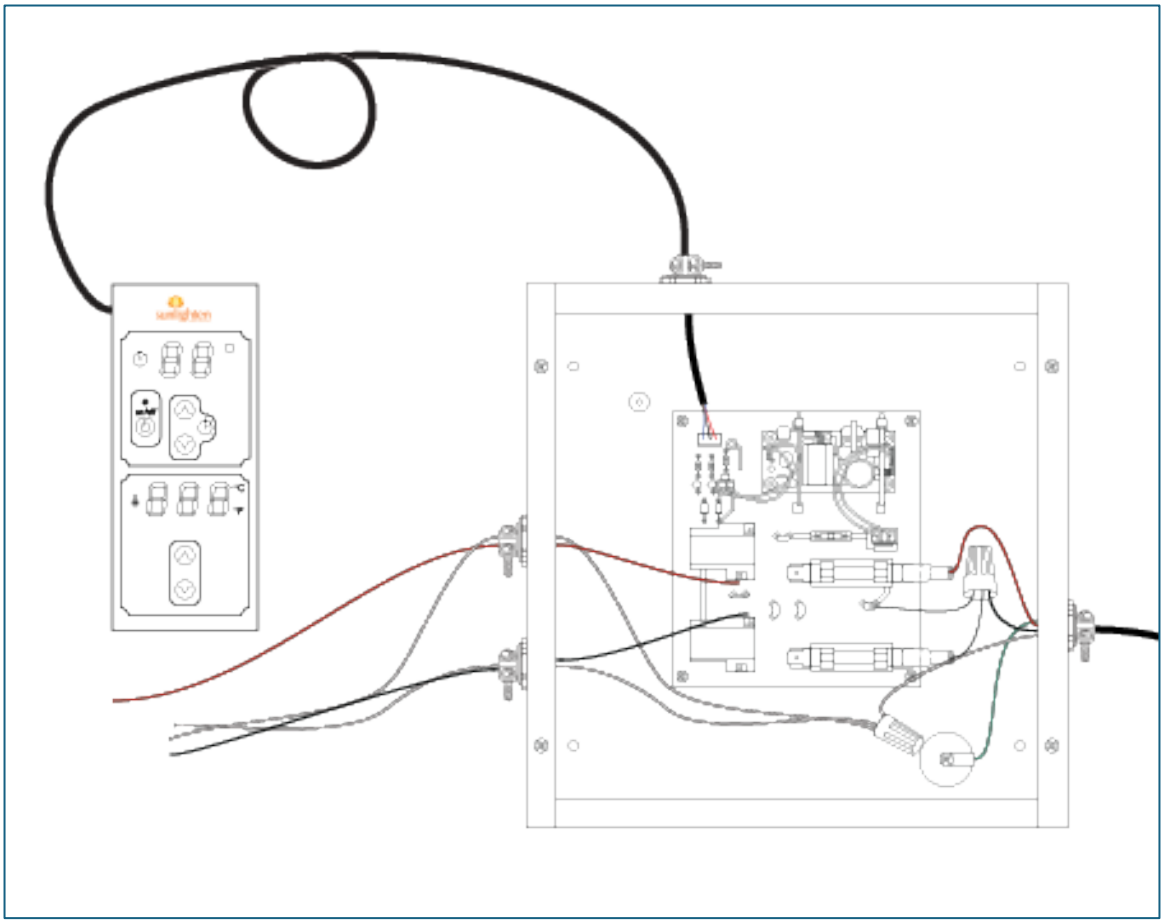

Each circuit has two lines. Each line carries a maximum of 2,900 Watts. Both lines carry a maximum of 5,500 Watts. Both lines should be evenly balanced.

2.5.3.2 Double Heater Circuit

The double circuit system is a method that controls two circuits of any number of heaters totaling up to 5,500 Watts for each circuit for a maximum of 11,000 Watts. The double circuit system is shown in see Figure 12.

Figure 12. Double Heater Circuit

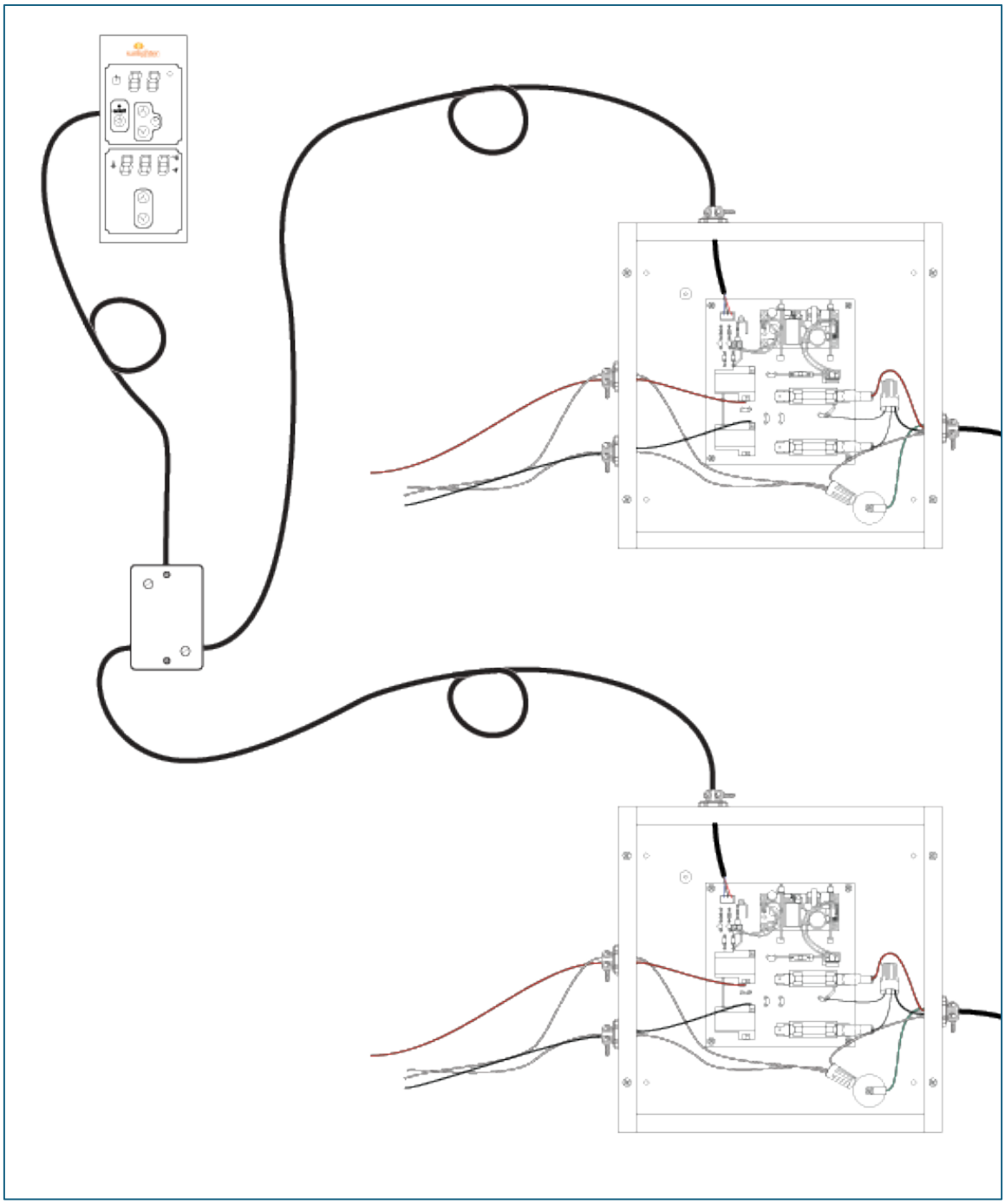

For systems that exceed the double circuit maximum, additional circuits and control panels may be required.

NOTE
For systems that exceed the double circuit maximum, additional circuits and control panels may be required. Systems installed by a certified electrician per local codes.

2.5.3.3 Wiring Diagram

Figure 13 shows a 240V 30A wiring diagram. Trim off existing voltage and wiring.

Figure 13. 240V 30A Wiring Diagram

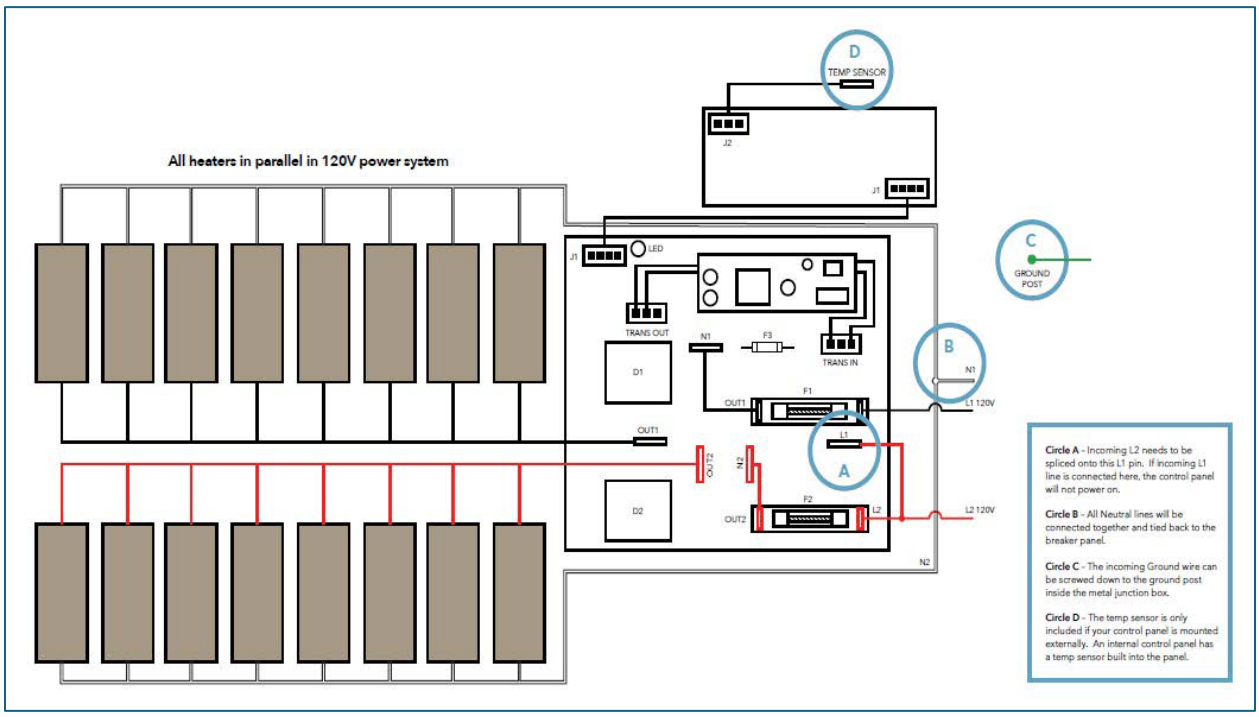

2.5.3.4 Wire Connections

Wire Nuts (Figure 14) are to be supplied by the client/contractor unless installed by Sunlighten.

Figure 14. Wire Nut Connectors



NOTE
All wire connections are to be made per local codes using best business practices by licensed technicians.

2.5.3.5 Sauna Power Control Panel and Sauna Control Cable

The Sauna Power Control Panel is used to control the on/off power, temperature, and timer settings. Refer to Figure 15.

The Sauna Control Cable is used to link the Control Panel to the Sauna Circuit Board. Refer to Figure 16 and Table 13.

Figure 15. Sauna Power Control Panel

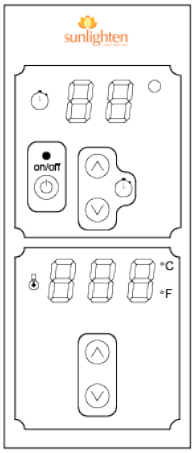

Figure 16. Sauna Control Cable

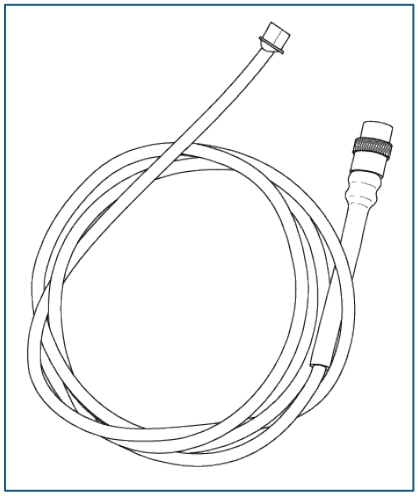

Table 13. Sauna Control Cable

AWG	Voltage (VAC)	Amperage	Connector
20	5V	1.5A	GX20 Round Female, Molex 4-Pin

2.5.3.6 Temperature Sensor Cable

The Temperature Sensor Cable is used to operate the Sauna from a Sauna Control Panel located outside of the Sauna (it is not required for an internal control panel). Refer to Figure 17. If your sauna uses an external control panel, a Remote Sensor and the Temperature Sensor Cable will be used.

Figure 17. Temperature Sensor Cable

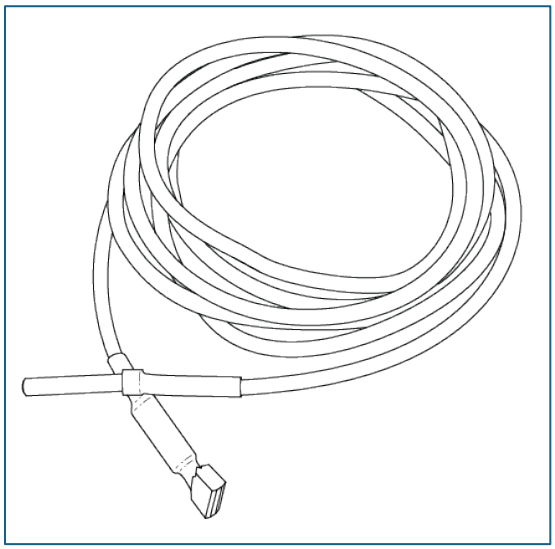

2.5.4 (Optional) Chromotherapy

The (Optional) Chromotherapy Lighting Package provides therapeutic lighting that many people find healing and soothing (for more information on chromotherapy, contact Sunlighten). It supplies the equipment to provide chromotherapy lighting for your sauna. One power supply/transformer can support up to 10 lights. If additional lights are needed, additional power supplies/transformers are required. It is shown below.

Figure 18. Chromotherapy Package Components

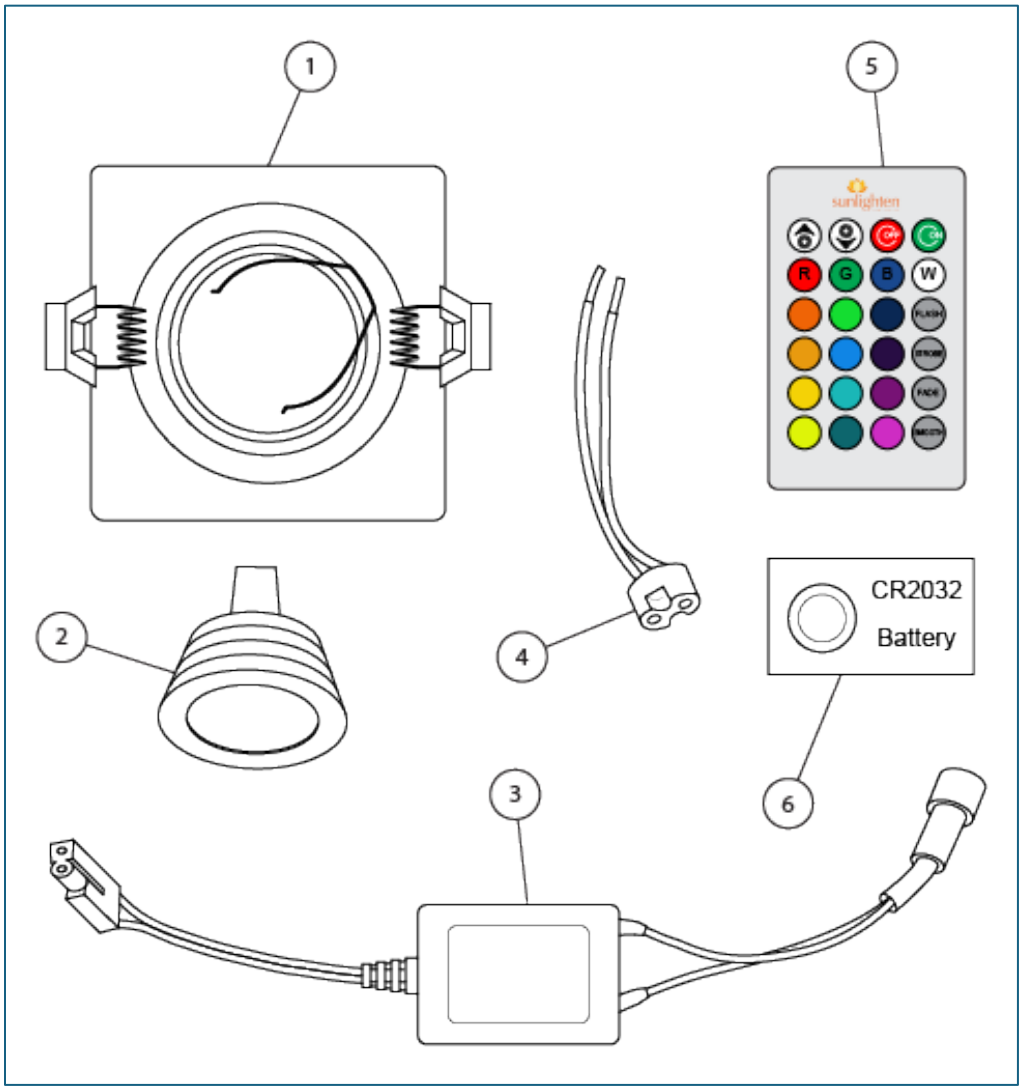

Table 14. Chromotherapy Package

Item	Quantity	Description
1	1	IC Frame
2	1	LED Light Bulb
3	1	LED 5V Transformer (One required for each 10 lights.)
4	1	IC Ballast
5	1	Chromotherapy Remote Control
6	1	Battery, CR2032

3 Sauna Components

The following items are required for installing the Sauna:

1. 240V Single-Phase Power, located at the Sauna.
2. Power Junction Box (Single or Double Circuit) and Control Panel. One control panel can support 1 or 2 circuits (dual circuit systems include a Junction Box and Cables to link the systems. Additional circuits will require additional Control Panels.
3. Heaters
4. Milled Wood which includes trim.
5. Electronics (control panel(s))
6. Accessories, such as the entry door (if purchased separately).
7. Other items/systems required by local codes (unless noted, are not supplied by Sunlighten.

NOTE

Trim is included. It is the customer's option if the trim is to be used. Trim has no bearing on Sauna operation.

3.1 Overview

Installing your Sunlighten custom infrared sauna requires skilled contractors with knowledge in carpentry, indoor electrical wiring, HVAC, and industrial electronics. Sunlighten recommends using certified professional contractors skilled in carpentry and indoor electrical wiring, as well as acquiring all necessary building permits before starting the installation of your custom infrared sauna(s). All commercial sauna installations will need all necessary sprinklers added during installation as recommended by their respective municipalities, fire protection agencies, and building codes. Sunlighten recommends meeting all code compliances applicable for your municipalities.

Your selection of flooring materials will have a bearing upon warm-up time, and maximum temperature of your sauna. If certain materials are used for the floor, a customer provided floor heater/warmer may be used. Make sure any floor heater/warmer that is selected, is done so by a licensed contractor, and is selected and installed per all applicable building codes.

CAUTION

Sunlighten recommends using certified/licensed professional contractors skilled in carpentry and indoor electrical wiring, as well as acquiring all necessary building permits before starting the installation of your custom infrared sauna(s). All commercial sauna installations will need all necessary sprinklers added during installation as recommended by their respective municipalities, fire protection agencies, and building codes. Sunlighten recommends meeting all code compliances applicable for your municipalities. Failure to do may violate local laws and WILL violate all Sunlighten warranties.

Sunlighten does not issue electrical design drawings for specific sauna builds. Sunlighten only issues electrical wiring and electric record documentation on its specific electrical components and products to aid your electrician in designing an appropriate electrical circuit for your specific sauna design and your specific building area.

CAUTION

Warning: To reduce the risk associated with hazardous voltage and fire, turn off the sauna from the electrical power supply when not in use for extended periods. Keep all liquids away from the heating panels and electronics. Keep flammable substances and corrosive chemical substances away from the sauna. Do not operate the sauna if it is NOT on a dedicated electrical circuit or has a damaged power main or wiring. If the sauna is not operating correctly, or an odor persists, immediately turn off the sauna. Do not leave the sauna unattended while turned on or in use. Never cover heater panels with towels, mats, garments, etc. Install the sauna in an area that is dry and protected from the weather. Installing the sauna in an area which is below the standard room temperature may increase the time required for warm up.

NOTES

General construction design plans for your specific sauna are provided within the agreed upon period after the deposit and require customer approval for general overall design intent. General design plans for your sauna contain all relevant floor plan view(s), ceiling plan view(s), and elevated view(s) needed for customer approval. Other design services may be provided upon request.

Additional construction supplements, such as detailed cut lists and assembly instructions will be provided upon request for sauna-specific tongue-and-groove paneling, sauna benching, bench support cabinet hanging, and ceiling light installation.

Electrical wiring drawings will not be provided for specific sauna designs.

3.2 Walls

Depending upon the design and location of your Sunlighten Custom Sauna, there will be several different types of walls that need to be built/assembled. The different types of walls are as follows:

- Semi-Attached Door Wall
- Semi-Attached Wall
- Attached Wall
- Attached Door Wall
- Roof

Every Sauna will have a Semi-Attached Door Wall. Some Saunas may have completely custom walls (made with other materials). If so, contact Sunlighten for information. Refer to Table 15 for types of walls required.

The following table shows the suggested amount of the various walls and roof for a rectangular sauna. Please refer to your plans.

Table 15. Suggested Wall Types

Sauna Location	Semi-Attached Door Wall	Semi-Attached Wall	Attached Wall	Roof*
Unattached sauna.	1	3	-	1
Up against a wall.	1	2	1	1
Sauna located in a corner.	1	1	2	1
Sauna located in an alcove.	1	-	3	1

* Depends upon the design and the available height above the sauna.

NOTE

This manual is for a custom Sauna of any size and shape. Your Sauna **WILL** look different from the figures below. You may not have all the wall types listed below.

NOTE

All saunas will perform slightly different based upon size, design, look, location, and other factors including, but not limited to tall ceiling, glass wall(s), window(s), glass door(s), and location will affect the heat-up time and peak temperature.

3.2.1 Semi-Attached Door Wall

A Semi-Attached Door Wall is required. It will have an opening cutout for either of the following door sizes (if the door is purchased separately from Sunlighten:

- 80” tall x 32” wide
- 80” tall x 36” wide

On Sunlighten purchased doors, Sunlighten recommends a ⅛” – ¼” gap on the top, bottom, and the side opposite the hinges.

NOTE

If the sauna will be using a door not purchased from Sunlighten, then Sunlighten assumes no responsibility for either the sauna cutout, door or door hardware, any installation, performance, or function of the door or sauna.

Figure 19 shows how the Semi-Attached Door Wall is built/assembled. Table 16 lists the components of this wall. Figure 29 shows how to attach the Tongue-and-Groove Milled Wood to the inside of the Sauna wall.

Figure 19. Semi-Attached Door Wall

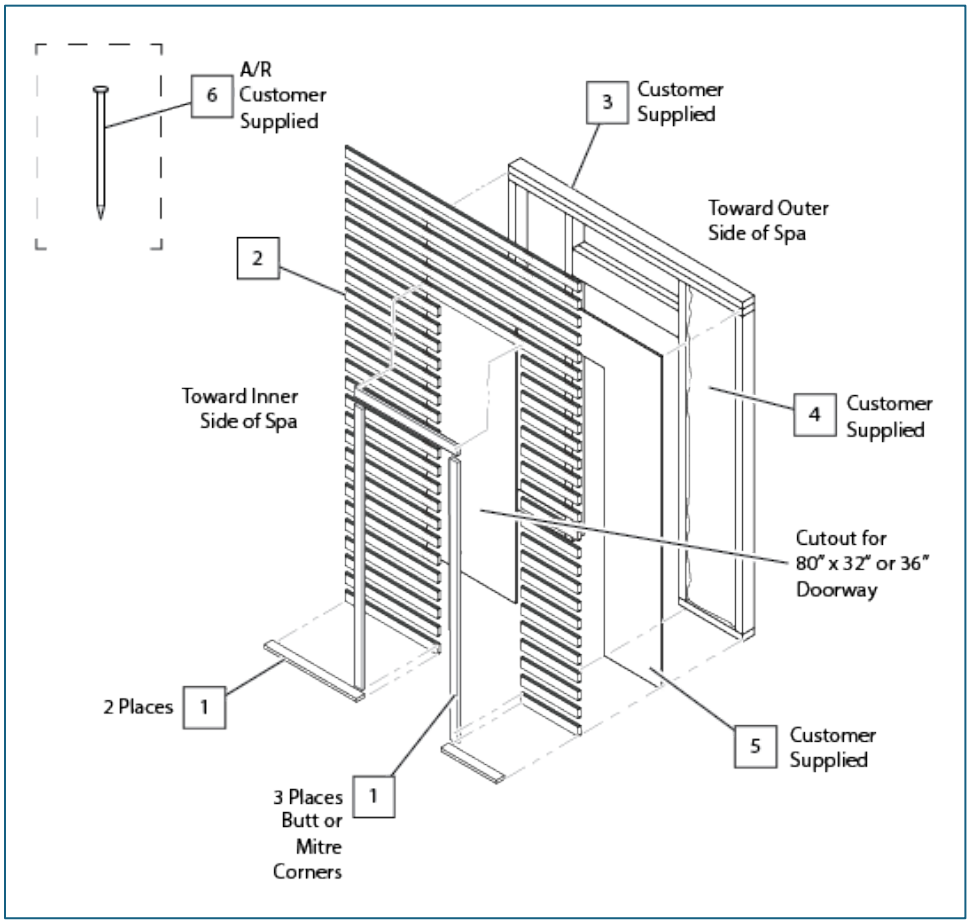

Table 16. Wall Components

Item	Description
1	Trim Strip – Used if the customer wants to install after all of the Tongue-and-Groove pieces are installed. May be installed on any/all of the following locations: • around door opening • floor • ceiling • ends of Tongue-and-Groove pieces.
2	Tongue-and-Groove – Attach with Fastener [Item 7].
3	Customer supplied framing. Build per local codes by a skilled contractor. Finish as required.
4	Customer supplied insulation. Sunlighten recommends a minimum of R-15. Increasing the R-value will respectively increase the sauna's performance. Consult professionals on the type/style of insulation for use and performance in heated/infrared environments.
5	Customer supplied fire-resistant or fireproof sheeting. Install per local codes by a skilled contractor.
6	Fasteners - Customer supplied. Shown for illustrative purposes only. Sunlighten recommends a corrosion resistant fastener long enough to reach into the customer supplied framing.

3.2.2 Semi-Attached Wall

Depending upon the location of the sauna, a Semi-Attached Wall is optional. If included in your Sauna design, it may have cutout(s) for one or more heater(s).

Figure 20 shows how the Semi-Attached Door Wall is built/assembled. Table 16 lists the components of this wall. Figure 29 shows how to attach the Tongue-and-Groove Milled Wood to the inside of the Sauna wall.

Figure 20. Semi-Attached Wall

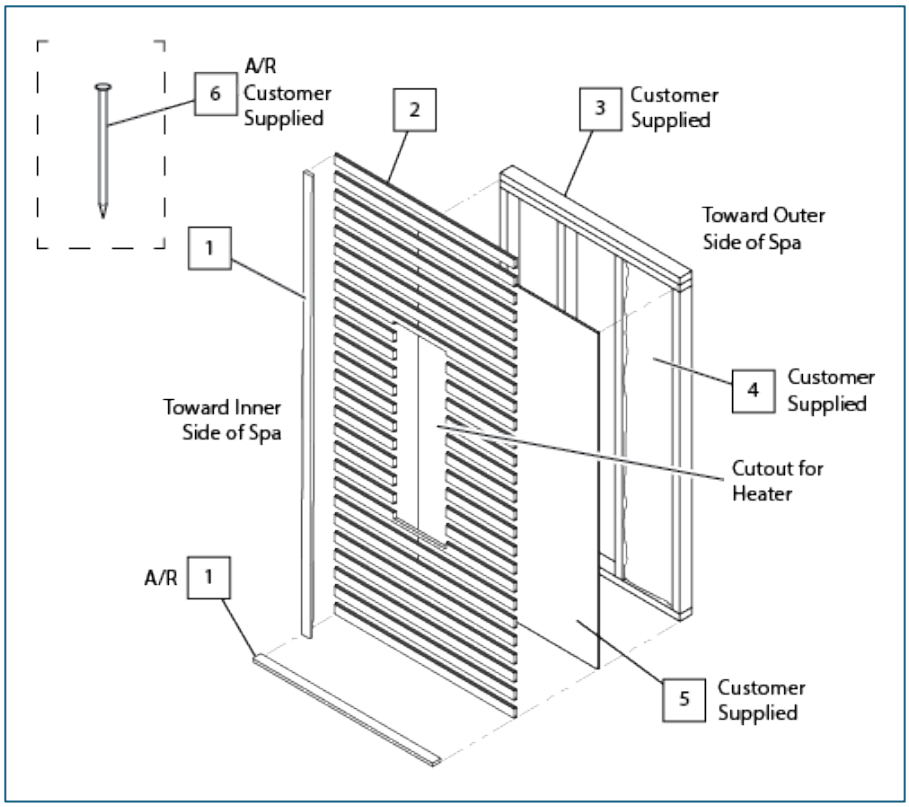

3.2.3 Attached Walls

An Attached wall is optional. If included in your Sauna, it may have cutout(s) for one or more heater(s).

Figure 21 shows how the Semi-Attached Door Wall is built/assembled. Table 16 lists the components of this wall. Figure 29 shows how to attach the Tongue-and-Groove Milled Wood to the inside of the sauna wall.

Figure 21. Attached Wall Assembly

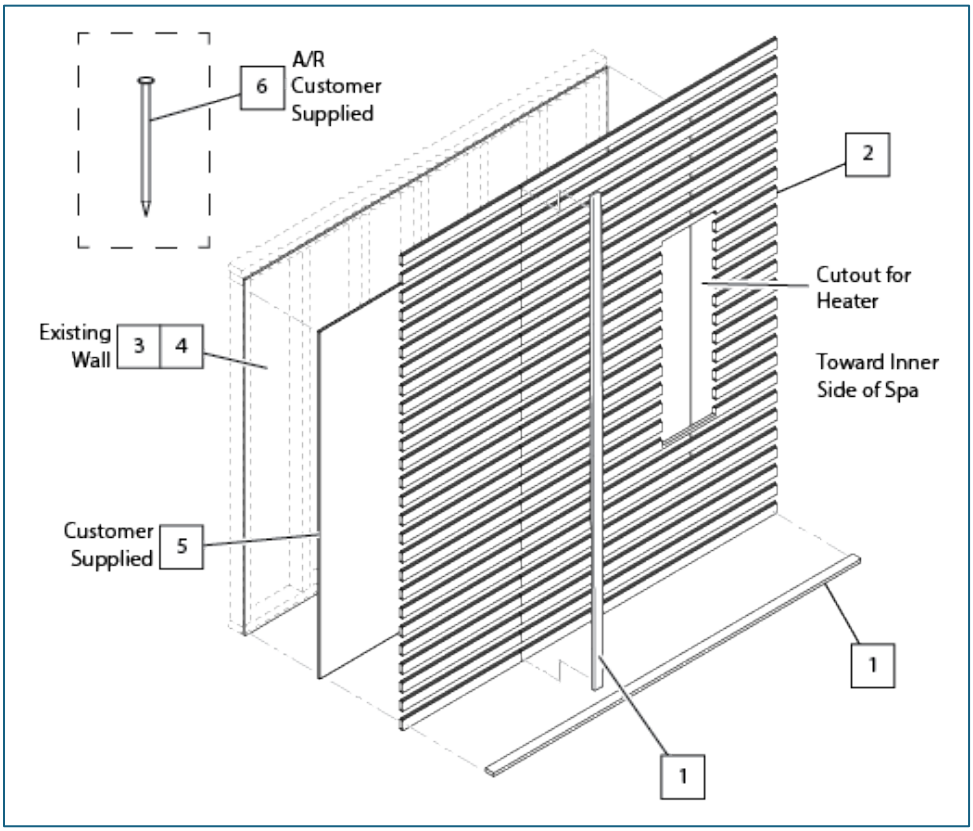

3.2.4 Roof/Ceiling

A roof or ceiling is required. The following applies:

- Roof – A roof is required when the top of your Sauna is below the existing room/building roof or ceiling. If so, the roof is built like a Semi-Attached Wall. It can be level or pitched.
- Ceiling – If the top of the Sauna is at the level of the existing roof or ceiling, it is built like an Attached Wall.

Your Sauna can be built with the roof at any height you desire (flat or pitched).

NOTE
A taller ceiling will increase heat-up times and decrease potential peak heat temperatures.

3.2.5 Accessories

Accessories should include the Door, and any other customer supplied items such as insulation. Sunlighten is not responsible for any customer supplied accessories.

For customer supplied insulation. Sunlighten recommends a minimum of R-15. Increasing the R-value will respectively increase the sauna's performance. Consult professionals on the type/style of insulation for use and performance in heated/infrared environments.

3.2.5.1 (Optional) Door

If ordered, your Sauna comes with either a 32" or 36" wide x 80" tall door assembly (refer to Figure 22) which opens to the left side or right side. The Door Assembly Components are shown below in Table 17.

Figure 22. Door Assembly

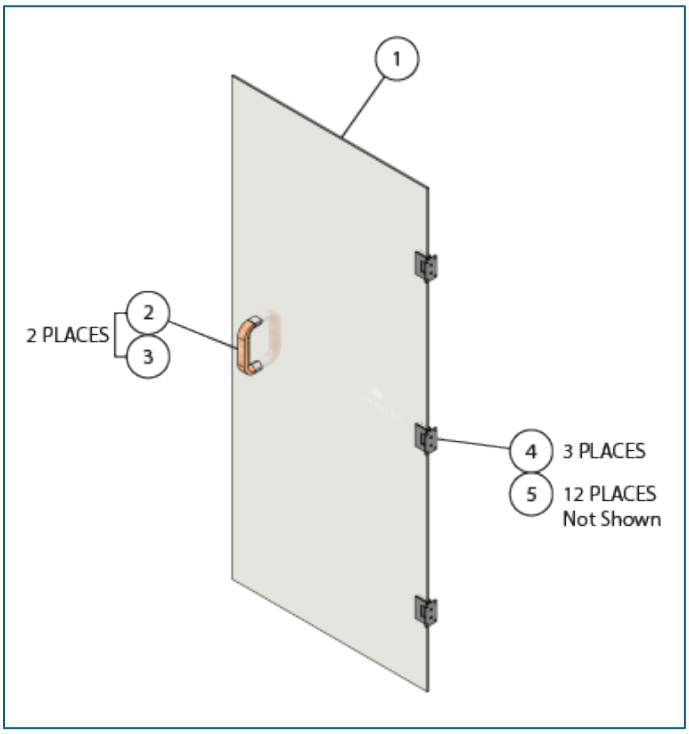

Table 17. Door Assembly Components

Item	Qty.	Description
1	1	80" x 32" Tempered Glass or 80" x 36" Tempered Glass.
2	2	Handle, Wood*/Stainless Steel
3	2	Attaching Fastener, Cap Screw, Stainless Steel.
4	3	Hinge
5	12	Hinge Fastener, Stainless Steel.

* Unless otherwise specified, the Handle Wood will match the Sauna wood.

3.2.5.2 (Optional) Chromotherapy

If ordered, your sauna comes with the Chromotherapy Lighting Package provides the equipment required for up to 10 lights. If your sauna requires multiple lights, additional packages are required. The Chromotherapy Lighting Package provides therapeutic lighting that many people find healing and soothing. It consists of the components shown in Figure 23 and listed in Table 14.

Figure 23. (Optional) Chromotherapy Lighting Package

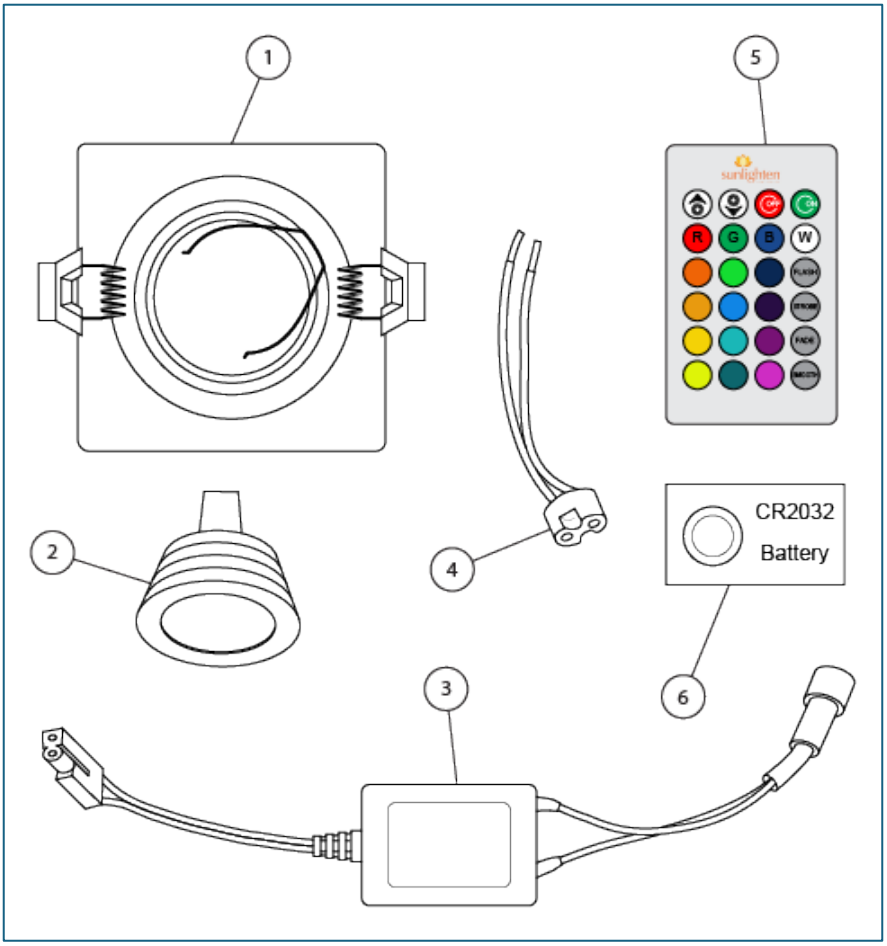

NOTE

If your floor is to be stone or tile, it may lengthen the heat up time and impact the maximum temperature of your sauna. Sunlighten recommends heating the flooring.


sunlighten
LIGHT FOR LIFE

4 Installation Instructions

NOTE

For additional support in installing your Sunlighten Custom Sauna, refer to the following video:

Sunlighten Custom Infrared Sauna Installation - YouTube
https://www.youtube.com/watch?v=G0uAjSyJIRU

4.1 Overview

Good installation is the key to having your Sunlighten Custom Sauna work correctly for many years. Remember, that each custom Sauna installation will be different, so these instructions are a starting point.

Installing your Sunlighten custom infrared sauna requires skilled contractors with knowledge in carpentry, indoor electrical wiring, HVAC, and industrial electronics. Sunlighten recommends using certified professional contractors skilled in carpentry and indoor electrical wiring, as well as acquiring all necessary building permits before starting the installation of your custom infrared sauna(s). All commercial sauna installations will need all necessary sprinklers added during installation as recommended by their respective municipalities, fire protection agencies, and building codes. Sunlighten recommends meeting all code compliances applicable for your municipalities.

CAUTION

Sunlighten recommends using certified/licensed professional contractors skilled in carpentry and indoor electrical wiring, as well as acquiring all necessary building permits before starting the installation of your custom infrared sauna(s). All commercial sauna installations will need all necessary sprinklers added during installation as recommended by their respective municipalities, fire protection agencies, and building codes. Sunlighten recommends meeting all code compliances applicable for your municipalities. Failure to do may violate local laws and WILL void all Sunlighten warranties.

NOTE

If desired, for additional safety, you may install a fire suppression system in and around the sauna. Select equipment that is suitable for a sauna environment. Sunlighten is not liable for any damage or injury caused by a fire suppression system.

Sunlighten does not issue electrical design drawings for specific sauna builds. Sunlighten only issues electrical wiring and electric record documentation on its specific electrical components and products to aid your electrician in designing an appropriate electrical circuit for your specific sauna design and your specific building area.

4.2 Pre-Installation

Do not place any plumbing or plumbing fixtures in the sauna.

Keep all liquids away from the heating panels and electronics.

Keep all flammable objects and corrosive chemical substances away from the sauna.

4.3 Location

Select a location for your sauna that is flat, dry, not prone to leaking, and with no mildew present.

If the sauna is installed in an area which has below standard room temperatures, it may increase the warm-up time.

4.3.1 Walls and Ceiling/Roof

1 Select which type of walls are to be used for your Sauna. Refer to Section 0.
2 Assemble the framework (studs) for the chosen walls.
3 When all the walls are assembled, install the ceiling/roof.
4 Insulate the walls from the floor to the ceiling, and the ceiling. Sunlighten recommends a minimum of R-15. Increasing the R-value will respectively increase the sauna's performance. Consult professionals on the type/style of insulation for use and performance in heated/infrared environments.
5 Install ⅝" thick Flame Retardant (FR) plywood to the stud faces. Sunlighten does not recommend using drywall.

NOTE
The higher parts of the walls and the ceiling are where most of the heat escapes, so make sure to fully insulate those areas.

WARNING	
	For safety and structural integrity, do not use drywall over the studs.

4.3.2 Electrical Connections

DANGER		
	Do not perform any electrical system work on the building or the unit without first shutting off power, to include locking out and tagging out (LOTO) power at the electrical panel.	

1 The Sunlighten Custom Sauna will require a single-phase, 4-wire, 30 Amp, 240 Volt dedicated circuit. In a commercial building the 208 Volt supply must be changed to 240 Volt.

When not bound by state or local codes, Sunlighten recommends using 10-Gauge wire.

NOTE
When not bound by state or local codes, Sunlighten recommends using 10-Gauge wire.

NOTE
A certified/licensed professional skilled in carpentry and indoor electrical wiring can install the equipment necessary for changing the existing commercial 208 Volt electrical supply to 240 Volt. Make sure this work is done using best practices as well as acquiring all necessary building permits. Failure to do so may violate local laws and WILL void all Sunlighten warranties.

The Cable will be fed into the Custom Sauna Power Box Assembly (see Figure 11).

The RED Wire (Power) connects to the L1 Terminal on the Circuit Board by the Fuse. Refer to Figure 24.

The BLACK Wire (Common) connects to the L2 Terminal on the Circuit Board by the Fuse and spliced onto the L1 pin between the two Fuses. Refer to Figure 25.

The WHITE Wire (Neutral) connects off the Circuit Board and back into the Main Bus Bar. Refer to Figure 26.

The GREEN Wire (Ground) connects to the Custom Sauna Power Box chassis using the existing screw. Refer to Figure 27.

Figure 24. Power Connection

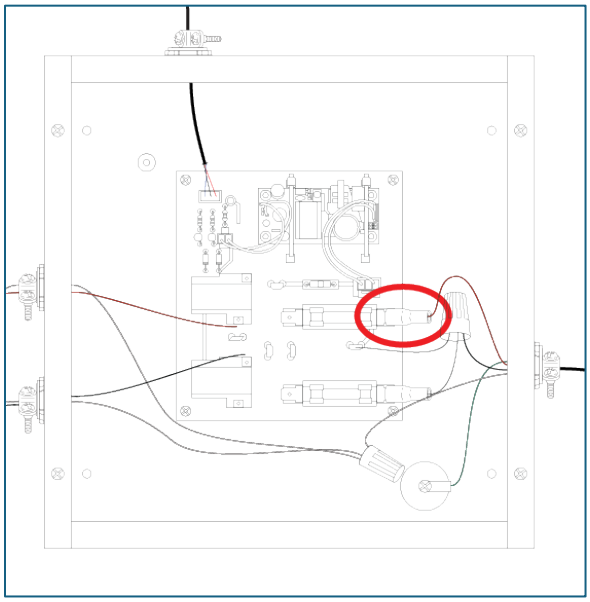

Figure 25. Common Connections

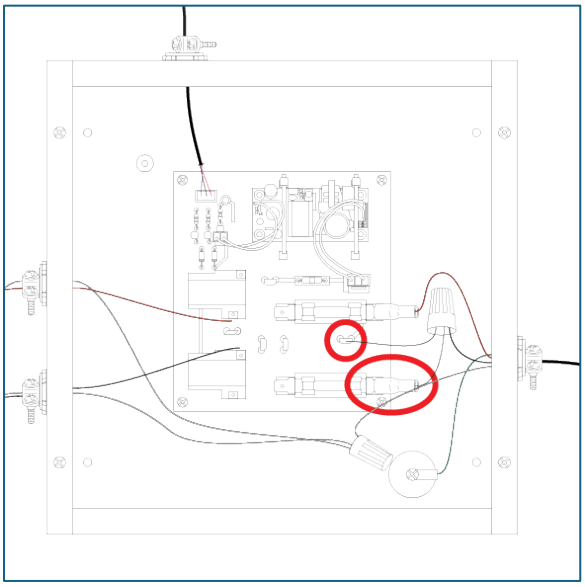

Figure 26. Neutral Connections

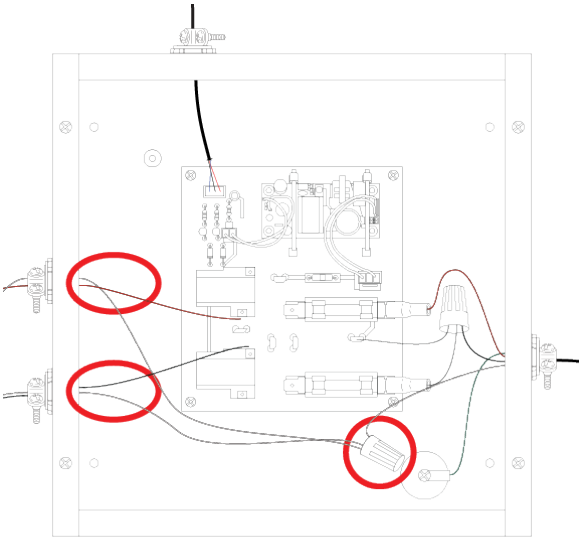

Figure 27. Ground Connection

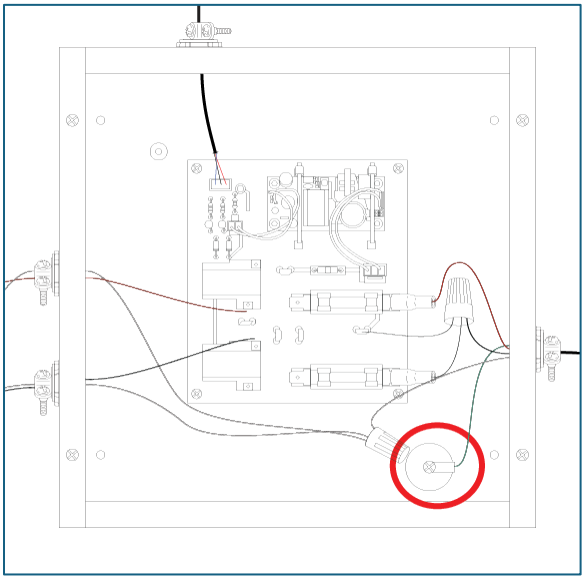

4.3.3 Heater Box

1 The Heater Box Frame(s) unscrew on the sides and reveal the mounting holes in the Heater Box Frame underneath the Heater Box Frame Trim.
2 All the Heater Boxes will be connected in parallel with Power (RED) and a Neutral (WHITE) wire.

NOTE
Each Heater Box is a certified fixture so electrical connections can be made inside.

3 Connections are made inside the Heater Box then continued down the line to the next Heater Box (for Saunas with multiple heaters).

NOTE
The connections can be made in any manner as long as they maintain parallel wiring and meet all codes and requirements.

4 Once the Heaters are wired and mounted to the FR Plywood, test the system operation by temporarily connecting the Sauna Control Panel to the Main Circuit Board, then applying power. Once the system functions correctly, continue.

DANGER		
	Shut off the power, and LOTO power at the electrical panel.	

4.3.4 (Optional) Chromotherapy Lighting Package

If included in your kit, the Chromotherapy Lighting Package needs to be installed. The package provides the equipment required for up to 10 lights. If your sauna requires more than 10 lights, additional transformers are required. It consists of the components shown in Figure 28 and listed in Table 14.

Figure 28. (Optional) Chromotherapy Lighting Package

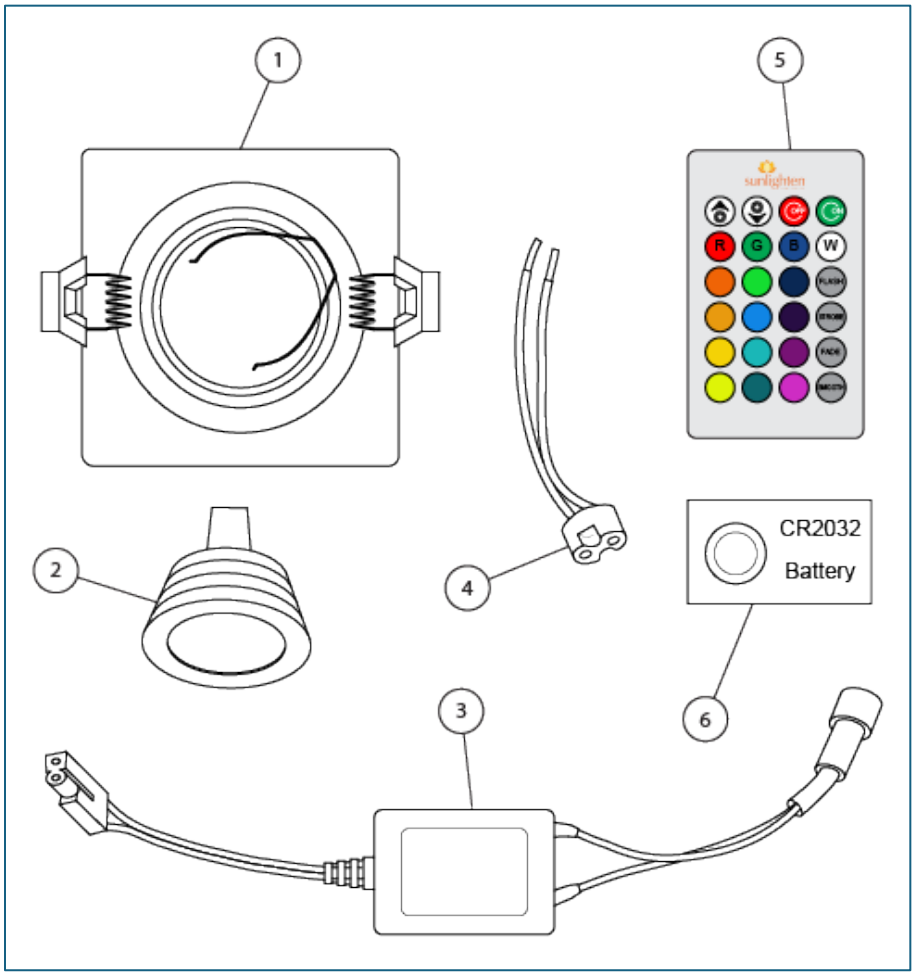

Table 18. Chromotherapy Package

Item	Quantity	Description
1	1	IC Frame
2	1	LED Light Bulb
3	1	LED 5V Transformer
4	1	IC Ballast
5	1	Chromotherapy Remote Control
6	1	Battery, CR2032

DANGER		
	Do not perform any maintenance on the unit without first shutting off power, to include locking out and tagging out (LOTO) power at the electrical panel.	

1. Decide and mark the location for the lamp, then install the IC Frame (Item 1).
2. Install a customer supplied electrical box near the door for a customer supplied light switch.

NOTE
The light switch circuit does not have to be dedicated.

3. Run customer supplied wire up to the 5V LED Transformer (Item 3).

NOTE
Install in an easily accessible location for maintenance or potential replacement.

4. Connect the 5V LED Transformer (Item 3) to the IC Ballast(s) (Item 4) in parallel.
5. Chromotherapy Bulbs (Item 2) are installed from the inside of the unit by carefully pulling down the metal casing from the roof. If needed, remove the IC Frame Fixture if you wish to change the bulbs from the top of the unit.
6. Connect the Chromotherapy Bulb(s) (Item 2) to the IC Ballast(s).
7. Push the Chromotherapy Bulb(s) (Item 2) through the IC Frame(s) (Item 1).
8. With the dome removed, pull wire grips back and install the Chromotherapy Bulb(s) (Item 2).
9. Place the IC Frame(s) back to its/their original position.
10. Turn on the interior light(s) to test. If it works correctly, replace IC Frame Fixtures to the roof panel of the sauna.

NOTE
If the IC Frame Fixtures do not sit flush due to the bulb, use customer supplied shims on the cover.

11. Insert the Battery (Item 6) into the Chromotherapy Remote Control (Item 5) and test.

4.3.5 Finishing the Inside of the Sauna

Finish off the inside of the sauna with the supplied Tongue-n-Groove boards. It is the customer's choice where and how to position the boards. The boards may be oriented as the customer desires, but cut lengths are based upon supplied drawings.

NOTE

Sunlighten does not recommend positioning the Tongue-n-Groove boards with the tongue facing downward. In time, dust, grit, and/or moisture may accumulate in the grooves and shorten the wood's life.

Fill in the remaining wall space around the mounted Heaters with the Tongue-n-Groove boards.

5 Select a wall to start. Cut to length (if necessary) then position the first board at a location of the customer's choosing. Use a customer supplied corrosion resistant fastener to start fastening the board as shown in Figure 29. The fasteners shown are for graphic representation only.

6 Fasten the Tongue-n-Groove Board either into the tongue (A) or the groove (B). Make sure that the nail is set flush or below the level of the wood.

7 Continue fastening the Tongue-n-Groove Board as described above until it is securely mounted to the wall, then place the next board and continue fastening.

8 Finish the first wall, then continue to the remaining wall(s), then to the ceiling.

9 When all the walls and ceiling are finished, you my use the (Optional) Trim Boards over the joints and cut lines if desired.

Figure 29. Fastening the Tongue-n-Groove boards.

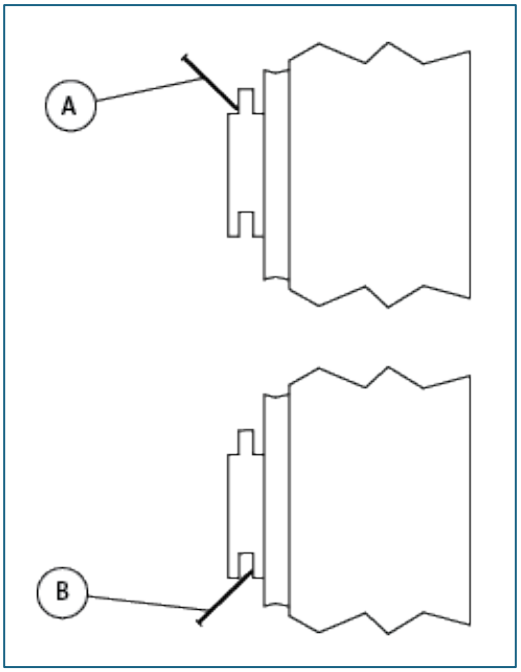

NOTE
Sunlighten does not recommend positioning the Tongue-n-Groove boards with the tongue facing downward. In time, dust, grit, and/or moisture may accumulate in the grooves and shorten the wood's life.

4.3.6 Mounting the FS Heater Enclosure

To mount the FS Heater Enclosure to the inside of the sauna, measure and secure two wooden blocks fashioned from excess wood material (shown in Figure 30 by a red box) to the inside of the sauna using customer supplied corrosion resistant screws. Place the Heater Enclosure, then fasten in place with two customer supplied corrosion resistant screws.

Figure 30. Mounting the FS Heater Enclosure

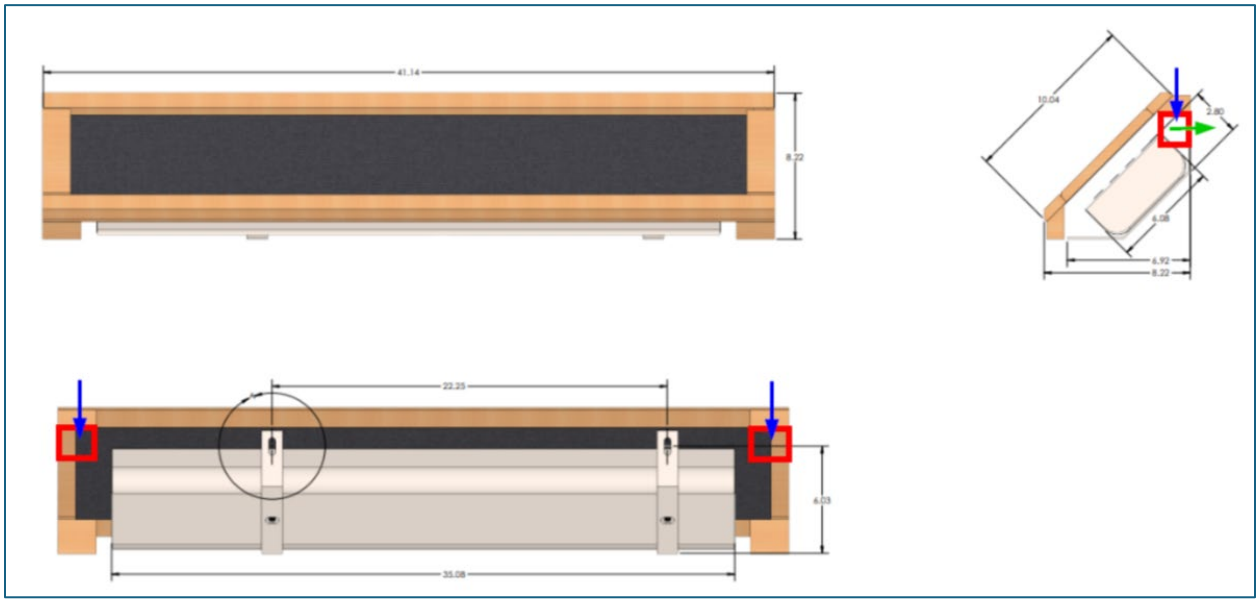

4.3.7 Custom Sauna Bench

1 The Custom Sauna Bench mounts directly into the wall studs. It can float over the floor or utilize support legs depending upon the design.
2 The Mounting Hardware should be attached from underneath the bench for a clean appearance.

4.3.8 (Optional) Tempered Glass Door

If included in your kit, the Tempered Glass Door needs to be installed.

DANGER		
	Installing the glass door is a two-person operation. Do not lift or install the door alone. The door is made from tempered glass but may still cause injury if broken or shattered. Sunlighten is not responsible for injuries and will not warrantee parts damaged by installing the glass door incorrectly.	

NOTES

Keep the blue protective wrap on the glass until the door assembly is completely mounted.

Sunlighten recommends keeping ⅛” – ¼” gap around the door (¼” nominal gap) for proper operation.

1 The Door Hardware (Figure 22) mounts directly through the finished door trim into the framing. For a refined look, recess the hinge base plates into the door frame.
2 The door swings in both directions and relies on a “detent” to stay in the closed position. Once the door is correctly mounted, test to verify it works correctly.
3 When the door is installed and works correctly, remove the blue protective wrap.


sunlighten
LIGHT FOR LIFE

5 Operation

This section discusses operating your Sunlighten Sauna.

DANGER

Prior to operating a Sunlighten Sauna for the first time, it is the owner's responsibility to assemble all safety/medical equipment per national (OSHA), state, and local codes.

DANGER

Do not use a Sunlighten Sauna if you have any underlying medical conditions as listed, but not limited to those in Section 0, Precautions. Sunlighten is not responsible for death, or any injuries sustained in or near the Sauna due to known or unknown medical conditions.

NOTE

If desired, for additional safety, you may install a fire suppression system in and around the sauna. Select equipment that is suitable for a sauna environment. Sunlighten is not liable for any damage or injury caused by a fire suppression system.

NOTES

All saunas will perform slightly different based upon size, design, look, location, and other factors including, but not limited to tall ceiling, glass wall(s), window(s), glass door(s), floor materials, and location will affect the heat-up time and peak temperature.

5.1 Pre-Operation

Your Sunlighten Sauna should be installed on a dedicated circuit, with a breaker switch. Turn off the breaker if you are not going to use your sauna for extended periods of time.

If the sauna is not working properly, if a strange sound is heard, or an odor persists, immediately turn off the sauna at the circuit breaker and contact Sunlighten.

Do not leave the sauna unattended while turned on or in use.

Never cover holes or Heater Panels with towels, mats, garments, etc.

5.2 Sauna Control Panel(s)

Your Sunlighten Sauna may come with one or more Sauna Control Panels, depending upon the number of heaters. To operate your sauna, refer to Figure 22.

Figure 31. Sauna Control Panel

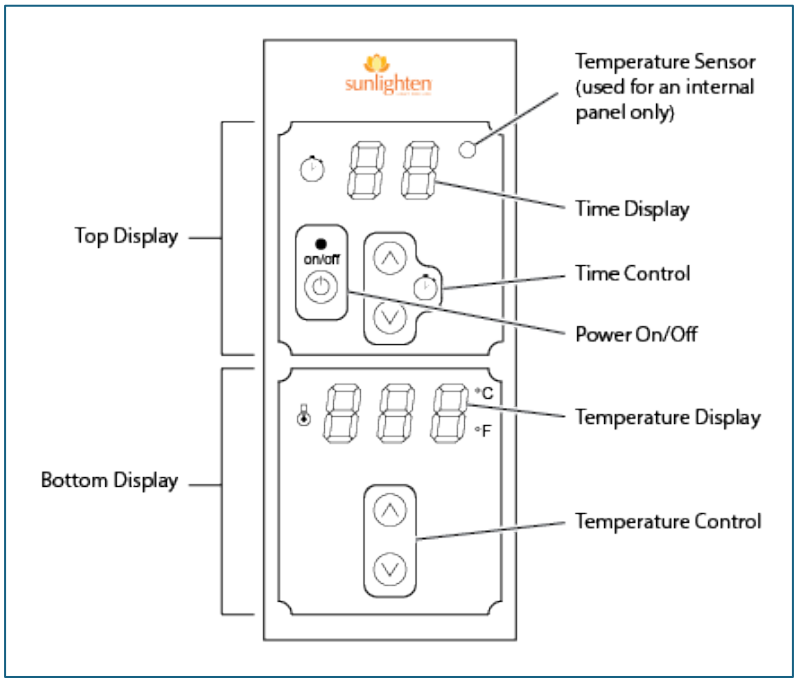

- Top Display – Contains the Temperature Sensor (internal control panel only, external control panels use a remote temperature prove supplied by Sunlighten), Time Display, Time Control Buttons, and the Power On/Off Button.
- Bottom Display – Contains the Temperature Display (ºF or ºC).
- Internally Mounted Control Panel – A remote probe will be supplied (when noted during the sauna design) to be routed into the room to communicate with control components to maintain the desired sauna temperature.
- Time Display – Displays the set time of the Sauna.
- Time Control – Allows setting the operation time of the Sauna.
- Power On/Off – Turns on/shuts off the Sauna.
- Temperature Display – Displays the inside temperature of the Sauna in either ºF or ºC. To toggle between ºF and ºC, press both Temperature Control arrows simultaneously.
- Temperature Control – Use the up and down buttons to set the required temperature.

5.3 Operation

Turn on the Sauna at the circuit breaker, and by pressing the Power On/Off Button on the Top Display.

Set the session time by pressing the Up or Down Time Control Buttons until the correct time is displayed.

Set the desired temperature by pressing the Temperature Control Up or Down Arrows on the Bottom Display.

NOTE
With the sauna turned off, press and hold (for approximately 15 seconds) the ON/Off Button to change the sauna timer to a 4-hour session time.

To toggle between ºF and ºC, press both Temperature Control arrows simultaneously. After 5 seconds, the display will show the actual interior temperature.

DANGER	
	The full-spectrum heaters are extremely hot. Touching the heater or wooden frames may cause burns. Do not place objects on or around the full-spectrum heaters.

5.4 Warm-Up Time and Usage Guidelines

The controls are preset to 60 minutes at 150ºF (66ºC). This is the maximum temperature setting, as the actual temperature will not reach this during normal use. If the system reads a temperature exceeding the set temperature, it will deactivate the heaters to bring the air temperature back down under the limit.

NOTE
Sunlighten Saunas are based on infrared wavelength and not cabin temperature.

Allow the Sauna to warm-up for 30-45 minutes. The sauna heats up at an average of 1ºF every 1 to 2 minutes.

Follow these steps for proper warm-up:

1. Make sure your sauna is connected to a dedicated circuit installed by a certified electrician per all required codes.
2. Check the settings on the Control Panel(s). The default setting(s) should be set to 150ºF (66ºC) and the timer should be set to 60 minutes.
3. When turning the sauna on for the first time, verify after a couple of minutes, that each heater is warming up.

If your sauna is located outside or in an unheated area such as a garage, sunroom, basement, or enclosed patio, it may take additional time to warm the sauna up. Warm time is impacted by the surrounding temperature and outside surface temperature.

NOTE
If your sauna is located outside or in an unheated area such as a garage, sunroom, basement, or enclosed patio, it may take additional time to warm the sauna up.

5.4.1 4-Hour Timer Mode

To place the sauna into the 4-Hour Timer Mode:

- Turn the sauna off.
- Press and hold the power button (for approximately 15 seconds) until the timer display reads “4h”.
- The unit is now in the “4-Hour Timer” mode and will stay in that mode until the process is repeated and will set it back to 60 minutes.

To cancel “4-Hour Timer” mode, with the unit off, press and hold the power button until the display turns on.

5.4.2 Reservation Mode

Reservation Mode allows the sauna to be turned on within a selected time. To place the sauna into the Reservation Mode:

- Turn the sauna off.
- Press and hold the Timer Up and Timer Down buttons simultaneously.
- A digit will appear on the timer section of the screen to indicate the number of hours before the sauna turns on.
- When the timer counts down to “0”, the sauna will turn on for a 60-minute session and will be set to 151ºF (66ºC)

To cancel a reservation, press the Timer Up and Timer Down arrows simultaneously until the time display turns off. At this point you can turn the sauna on normally.

5.5 Sauna Protocol

This section is a quick guide for the optimal sauna experience.

5.5.1 Pre-Sauna Session

- Hydrate with at least 8 oz (.24 l) of water to prepare your body for an increase in core temperature.
- Pre-heat for approximately 45 minutes. Depending upon the room temperature your sauna will heat up one degree per 1 to 2 minutes.
- Prepare towels to absorb sweat during sessions.

5.5.2 Sauna Sessions

- Begin your session when your sauna reaches 100.4ºF (38ºC).
- The optimal sauna experience occurs between 100.4ºF (38ºC) and 129ºF (54ºC).
- To get your body accustomed to infrared therapy, start with 10–15-minute sessions at 100.4ºF (38ºC) every other day.
- Gradually increase toward 40-minute daily sessions at the optimal temperature range. *
- Do not be surprised if you do not sweat during the first few sessions.
- Sweating will increase with regular use, removing toxins and leaving you feeling refreshed and rejuvenated.
- Once your body is used to the sauna, you may use Pure Sweat Amplifying cream to increase sweating, circulation, and to boost results.

*Listen to your body. Be aware of excessive detoxifying. If you begin to feel symptoms such as nausea, fatigue, or flu-like symptoms during your sauna session, discontinue use immediately. If these symptoms continue, consult your physician.

DANGER	
	If you begin to feel symptoms such as nausea, fatigue, or flu-like symptoms during your sauna session, discontinue use immediately. If these symptoms continue, consult your physician.

5.5.3 Post-Sauna Sessions

- Drink at least 24 oz (.7 l) of water or electrolytes to rehydrate.
- Dry off with a towel. Cool down naturally or with a refreshing shower.

5.6 Health and Safety

Our infrared saunas operate with the same efficacy in your home as in a medical facility. Like all professional equipment, you may put yourself at risk if you do not fully understand how to use the sauna. Infrared sauna use as creating a cure for, or treating any disease is neither implied nor should be inferred. Drinking an electrolyte-replacing water or sports drink is strongly recommended before or after use.

5.6.1 Important Safeguards

- Never sleep inside the sauna while it is on.
- Do not use harsh cleaning agents on the interior of the sauna.
- Do not stack or store objects inside the sauna.
- Do not use the sauna during an electrical storm, as there is a remote risk of shock.
- Altering or tampering with any electrical connections, outside of a licensed electrician or Sunlighten specifications is dangerous and will void the warranty.
- Do not attempt a repair without consulting Sunlighten first. Unauthorized repair will void the warranty.
- Do not clean or expose any sauna materials (wood, electronics, etc.) with water or other liquids. Only use Sunlighten products and methods for cleaning. Sunlighten products may be purchased at Sunlighten.com and include: Sunlighten Natural Wood Cleaner, and Sunlighten Natural Glass Cleaner. Refer to Table 19 for maintenance intervals.

5.6.2 Precautions

If any of the items below apply to anyone wishing to use the sauna, consult your physician prior to sauna use:

- Medications
- Children
- Elderly
- Chronic conditions/diseases associated with the reduced ability to sweat or perspire.
- Hemophiliacs/individuals who are prone to bleeding.
- Cardiovascular conditions
- Pacemaker/defibrillator
- Alcohol/alcohol abuse.
- Drug/drug abuse.
- Fever
- Sensitivity to heat
- Pregnancy
- Joint injury
- Implants
- Diabetes

For more information on saunas and contraindications, visit Sunlighten.com.

5.7 Using Chromotherapy

To use Chromotherapy, turn on the dedicated switch. Use the Chromotherapy Remote to select the type of light/treatment desired. Refer to the Sunlighten Chromotherapy Manual for more information.

5.8 Frequently Asked Questions (FAQs)

How long does it take for my sauna to warm-up?

The controls are preset to 60 minutes at 151ºF (66ºC). However, the inside room temperature is not intended to reach this. Our saunas are based on the infrared wavelength and not room temperature. Allow the sauna to warm-up for 45-60 minutes. The sauna heats up at an average of 1ºF per 1 to 2 minutes. If the sauna is located outside or in a non-climate-controlled area, additional warm-up time may be required. If you prefer the sauna hotter, let it warm-up longer.

Can I use my sauna every day?

For most people, daily sauna use is okay after your body has become accustomed to infrared therapy. Drink increased amounts of water to stay hydrated. Listen to your body and stop your session if you feel any discomfort and consult your physician.

How long can I use my sauna each day?

40 minutes is the recommended session length. Refer to Section 0.

What is the best temperature to use my sauna?

First, it is important to understand that health benefits are a result of efficient infrared emissivity, not air temperature. Sunlighten saunas are 95-99% emissive to deliver the highest concentration of infrared. With that, the optimal sauna experience occurs between 100.4-129ºF (38-54ºC). During your first few sessions, start at a lower temperature of 100.4ºF (38ºC) and gradually increase in later sessions. Everyone has different preferences and tolerances for heat. The most important thing is to listen to your body. Keep in mind, if you are sweating at 115ºF (46ºC), you are getting the same benefits as if sweating at 150ºF (66ºC).

What is the micron range of the heaters?

The design of a SoloCarbon Heater allows for most of the FAR infrared wavelength to be near 9.4 microns, which is the level at which the human body absorbs infrared energy.

Can I touch the heaters?

NO! The heaters will be hot, so it is not safe to touch the heaters while on, or an hour after use. Touching the frames that cover the heaters is safe.

How much will the sauna cost to run for a month?

A smaller sauna runs on the same wattage as a blow dryer and will cost little to run monthly. It typically costs $.20-.50 (approximately 15 – 35 pence) per hour. This varies with the overall sauna size and local utility cost. Your utility company can help you calculate the exact cost per hour if required.

Are the EMF levels safe?

Yes. Patented SoloCarbon panels are 100% quality controlled by Sunlighten to ensure the safety and effectiveness of each individual heater.

What is the wattage, voltage, and amps of my sauna?

The sauna is rated for: 240V, and up to 5,500W/30A per circuit.

For more FAQs, please visit Sunlighten.com.

6 Maintenance and Troubleshooting

This section discusses the periodic maintenance required to keep your Sunlighten Sauna operating like new for many years to come.

6.1 Maintenance

Refer to the maintenance intervals in Table 19 below:

Table 19. Maintenance Intervals

When?	Action	Notes
Before First Use	Check to verify that the Heaters are getting hot.	The controls are preset to 60 minutes at 150.8ºF (66ºC). However, the inside room temperature is not intended to reach this. Our saunas are based on the infrared wavelength and not room temperature. Allow the sauna to warm-up for 45-60 minutes. The sauna heats up at an average of 1ºF per 1 to 2 minutes. If the sauna is located outside or in a non-climate-controlled area, additional warm-up time may be required. If you prefer the sauna hotter, let it warm-up longer.
After Each Use	Wipe away any sweat.	Use a clean towel.
Weekly**	Clean dust from sauna surfaces.	Use a dry dust cloth.
Bi-Annually	Clean all Sunlighten provided wood surfaces.	Use Sunlighten's All-Natural Wood Cleaner. *
	Clean glass door and window(s).	Use Sunlighten's All-Natural Glass Cleaner. *
	Clean heater fabric. **	Use a slightly damp cloth.
Annually	Check the door hinges for proper operation.	If there are any issues, such as anything becoming loose, squeaking, binding, etc., contact Sunlighten.
As Required	Clean wood stains.	Light sandpaper can be used to treat stains and remove loose debris on the interior sauna wood.
	Check all electronics for proper operation.	If there are any issues, contact Sunlighten.

* Sunlighten Natural Sauna Cleaner is made specifically for your sauna. The Natural Sauna Cleaning Kit can be purchased at www.sunlighten.com.

** More frequently in dusty areas or as needed.

NOTE
Never use any chemical cleaners on your sauna.

6.2 Troubleshooting

For troubleshooting issues, first refer to Table 20. If the issue continues, contact Sunlighten Customer Care.

Table 20. Troubleshooting Issues

Issue	Solution
An electrical component is not working after assembling.	Check all connections. A newly assembled unit with a non-functioning electrical component (Control Panel, Heater Panels, etc. will most likely have a missed or loose connection.
Sauna has no power.	Check the circuit breaker panel to verify the circuit breaker is not tripped or shut off.
Slow warm-up time.	Verify each heater panel is heating and that you have the correct electrical specifications on a dedicated circuit.
E1 error message on the Sauna Control Panel.	The E1 error code indicates a broken temperature sensor on the board. Contact Sunlighten Customer Care
Cracks in any Sunlighten provided wood.	It is natural to develop minor cracks in the wood. Blemishes, scratches, or scuffs can either be left alone, sanded, or a combination of gluing and sanding. If major cracks develop that jeopardizes the functionality, contact Sunlighten. *
Any other issue.	Contact Sunlighten.

* Wood is a living material that continues to respond to climate conditions, even after being manufactured into the sauna. During normal operation, wood may crack slightly due to moisture changes. Avoid any treatment containing benzene, high concentration of alcohol, or other potentially harmful chemicals. Sunlighten is not responsible for any cracks caused by mishandling.

7 Warranty

Sunlighten's warranty covers normal use for the product and is defined as five (5) years for heaters and one (1) year for electronics. The warranty is limited to Sunlighten Installations Only: If issue is caused by installation error or defective item, within the first 90 days (after installation completion) repairs, (based on earliest availability) Sunlighten with repair or reimburse local technicians if necessary. (Bids need approval prior to work being done). After 90 days, remaining regular warranty will be honored, but customer will be responsible for travel, shipping and/or service expenses.

After the time period for the shipping damage warranty passes, there is no warranty on the wood components/pieces. "Wood is a live, organic material, which can move or split over time."

This warranty extends only to the original retail or wholesale purchaser of the sauna and is terminated upon transfer of ownership. The sauna must be installed and used within one (1) year of the shipped date. Freight charges to and from the customer are the responsibility of the customer. This includes freight charges for parts shipped to enable the services of the sauna.

This warranty is void if the sauna has been altered, misused, abused, or exposed to water and/or other prohibited chemicals. Such instances shall include operation or maintenance of the sauna in deviation to the published instructions. The warranty extends to the manufacturing defects and does not cover the damages resulting from mishandling of the product by the installer/contractor or owner.

Sunlighten Corp. shall not be liable for the loss of use of the sauna or other incidental or consequential damages. Under no circumstances shall Sunlighten Corp. or any of its representatives be held liable for injury to any persons or damages to any properties.

NOTE
Shipping damage must be notated on the Bill of Lading (BOL). Sunlighten must be notified of damage to the sauna within two (2) business days of signing the BOL. Failure to notify Sunlighten within the established time frame will result in the owner taking full responsibility for cost of all replacement parts, including shipping and handling fees.

7.1 Return Policy

The buyer may cancel and return the Goods to Sunlighten, subject to the terms and conditions of this document, if the buyer provides written notice to Sunlighten within thirty (30) days of the buyer's receipt of the goods that the buyer does not accept the goods. No custom sauna materials can be returned once installed.

In the event that the buyer elects to cancel the order and return the goods pursuant to this paragraph, the buyer shall assume all risk of loss and transportation and handling charges in connection therewith. Sunlighten reserves the right to refuse to refund any deposit or payment, or cancel any payment due, and owing until such time as Sunlighten is: (a) is in receipt of the

goods; (b) has inspected the goods; and, (c) in Sunlighten's discretion, has found such goods to be free of damage. All returned goods must be in their original packaging.

NOTE
All returned goods must be in their original packaging.

In addition to other legal and equitable remedies available to Sunlighten, Sunlighten may refuse to refund all or any portion of any deposit or payment or cancel any payment due and owing if the buyer fails to comply with or violates the terms and conditions of this warranty.

Generated computer aided drafting (CAD) design of sauna(s) and related design/visualization services, drawing(s), file(s), and virtual asset(s) costs are non-refundable. $1,000 will be withheld from any refund to account for costs incurred throughout the design phase of the custom sauna.

7.2 Shipping and Handling Fee

All canceled or returned goods shall be subject to shipping costs (to and from) and handling fees in the event the buyer cancels the buyer's order after shipment has commenced.