Vaczon

CEILING FAN INSTALLATION MANUAL

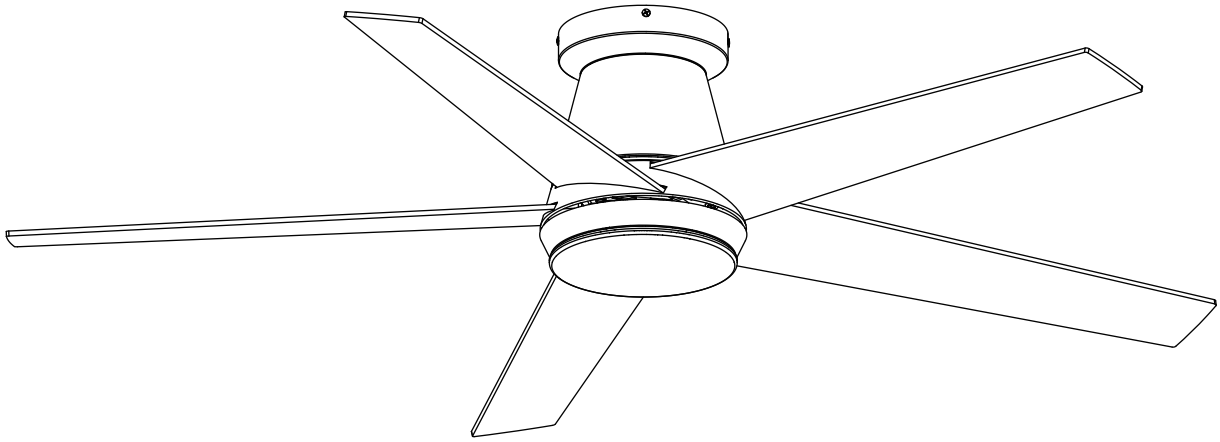

VZA01B109ACGD

READ AND SAVE THESE INSTRUCTIONS

CONTENTS

01 IMPORTANT SAFETY INSTRUCTIONS 1

02 PACKAGE CONTENTS 2

03 BEFORE INSTALLATION 3

04 INSTALLING THE HANGING PLATE 4

05 HANGING YOUR CEILING FAN BODY 5

06 ASSEMBLING THE BLADES 6

07 ASSEMBLING THE LIGHT KIT 6

08 ASSEMBLING THE LIGHT SHADE 7

09 PRODUCT SIZE 8

10 REMOTE CONTROL OPERATION 9-10

11 WARNING 11

12 FCC STATEMENT 11

13 APP OPERATION 12

14 CLEANING AND MAINTENANCE 13

15 TROUBLE SHOOTING 13

IMPORTANT SAFETY INSTRUCTIONS

1. **WARNING:** To reduce the risk of fire, electric shock, or personal injury, mount directly to a structural framing member or to an outlet box marked acceptable for fan support of 15.9kg (35 lbs). For outlet box mounting, use mounting screws provided with the outlet box.
2. To avoid possible electrical shock, before installing or servicing your fan, disconnect the power by turning off the circuit breakers to the outlet box and associated wall switch location. If you can not lock the circuit breakers in the off position,
securely fasten a prominent warning device, such as a tag, to the service panel.
3. To reduce the risk of electric shock, this fan must be installed with an isolating wall control/switch.
4. **WARNING:** To reduce the risk of personal injury, do not bend the blade brackets when instaling the blade brackets, balancing the blades, or cleaning the fan. Do not insert foreign objects in between rotating fan blades.
5. This appliance can beused by children aged from 8 years and above and persons with reduced physical, sensory or mental capabilities or lack of experience and knowledge if they have been given supervision or instruction concerning use of the appliance in a safe way and understand the hazards involved. Children shall not play with the appliance. Cleaning and user maintenance shall not be made by children without supervision. It is recommended that children be supervised to ensure that they are not using the appliance improperly.
6. **WARNING:** To reduce the risk of fire or electric shock or injury to persons, do not use replacement parts that have not been recommended by the manufacturer (e.g.parts made at home using a 3D printer).
7. Read all instructions and safety information before installing your new fan. Review the accompanying assembly diagrams.
8. Before installing the fan, disconnect the power by removing fuses or turning off circuit breakers.
9. Make sure all electrical connections comply with local law and the national electrical code. Please hire a qualified electrician or consult a do it yourself wiring handbook if you are unfamiliar with installing electrical wiring.
10. Make sure the instalation site is roomy enough to allow fan blades to rotate. There is at least seven feet from the floor to fan blades' tips.
11. If you are mounting the fan on a celing outet box, please use a metal outlet box. Secure the box directly to the building structure. The outlet box and its support must be able to support the rotating fan (at least 35lbs). Do not use a plastic outlet box. Attach the mounting bracket using the ceiling outlet box's hardware.
12. After installing the fan, make sure all the connections are secured so that the fan won't fall.
13. Do not insert anything between fan blades while the fan is operating.
14. Turn the fan off and wait for it to stop before reversing fan's rotating direction.
15. **WARNING:** To reduce the risk of electrical shock and personal injury, do not install the fan on a sloped ceiling and do not use this fan with any solid-state fan speed control device, or rheostat. You must install the outlet box using the two steel screws and lock washers coming with the fan.
16. All wiring must be in accordance with national and local electrical codes ANSI/NFPA70. If you are unfamiliar with wiring, use a qualified electrician.
17. After making the wire connections, the wires should be spread apart with the grounded conductor and the equipment-grounding conductor on one side of the outlet box and the ungrounded conductor on the other side of the outlet box.
18. The splices after being made should be turned upward and pushed carefully up into the outlet box.
19. Instructions for supply connections: the white conductor of a fan identified as grounded conductor to be connected to a grounded conductor of power supply, the black conductor of fan identified as ungrounded conductor to be connected to an ungrounded conductor of power supply, the green conductor of fan identified for equipment grounding to be connected to an equipment-grounding conductor.
20. When mounted directly to the building structure, appliance installation shall not expose combustible material and do not install the appliance to a ceiling with combustible finish. The installation of the appliance can not leave the wood of the rafters or any thermal insulation exposed to the interior of the room.
21. To reduce the risk of electric shock, disconnect the electrical supply circuit to the fan before instaling light kit.

SPECIFICATIONS

SKU#	VZA01B109ACGD	Voltage	120VAC 60Hz
Fan Blade Span	52"	Rated Wattage	53W(Fan35W,Lamp18W)
Average Airlow	3016CFM	RPM	100-190rpm
Maximum Noise	45db(A)	Number of rotating blades	5 blades

PACKAGE CONTENTS

PARTS

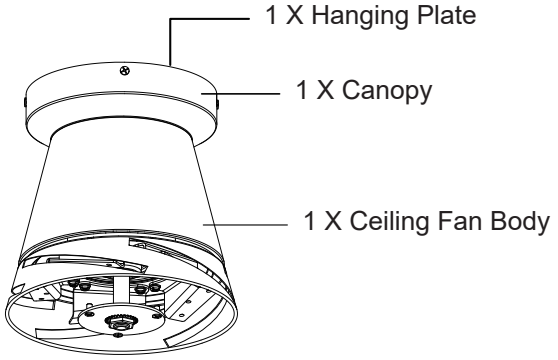

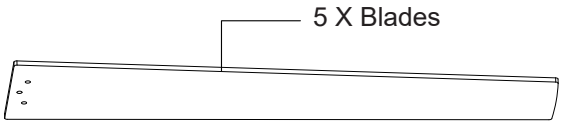

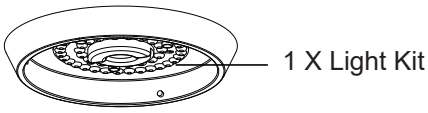

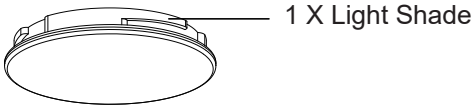

ACCESSORIES

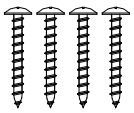

4 X ST5 X 35mm
Wood screws

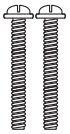

2 X 8-32UNC X 32mm
Mounting screws

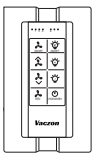

1 X
Remote control &
Remote control holder
(Battery included)

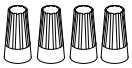

4 X
Plastic wire nuts



2 X
Ø16 X Ø4.5 X 1.5mm
Washers

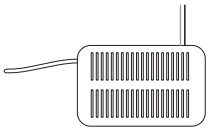

1 X Receiver

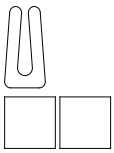

1 X
Balanced parts package



2 X M4
Spring washers



2 X
Screws



16 X M5 X 12 mm
Blade screws



16 X
Φ12 * Φ5 * 1mm
Blade Washers



2 X
Expansion screws

BEFORE INSTALLATION

TOOLS NEEDED (NOT INCLUDED)



Ladder



Phillips Screwdriver

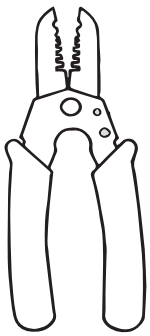

Wire Stripper

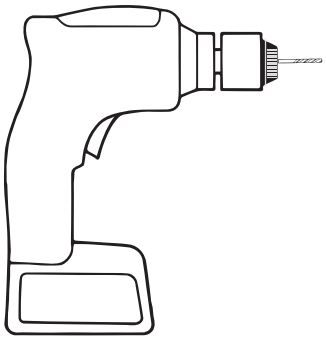

Drill

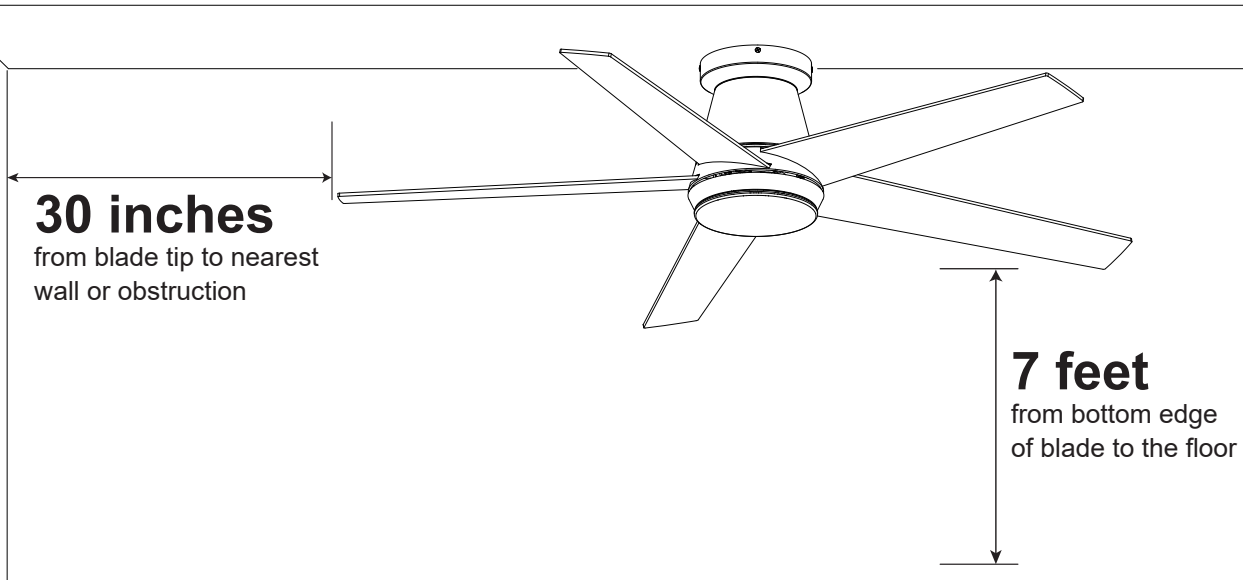

CHECK THE ROOM DIMENSIONS

INSTALLING THE HANGING PLATE

Step 1:

REMOVE THE HANGING PLATE FROM THE CANOPY:

1. Remove 2 screws from the canopy, loose 2 screws from the hanging plate.
2. Rotate the hanging plate counterclockwise and remove it from the canopy.

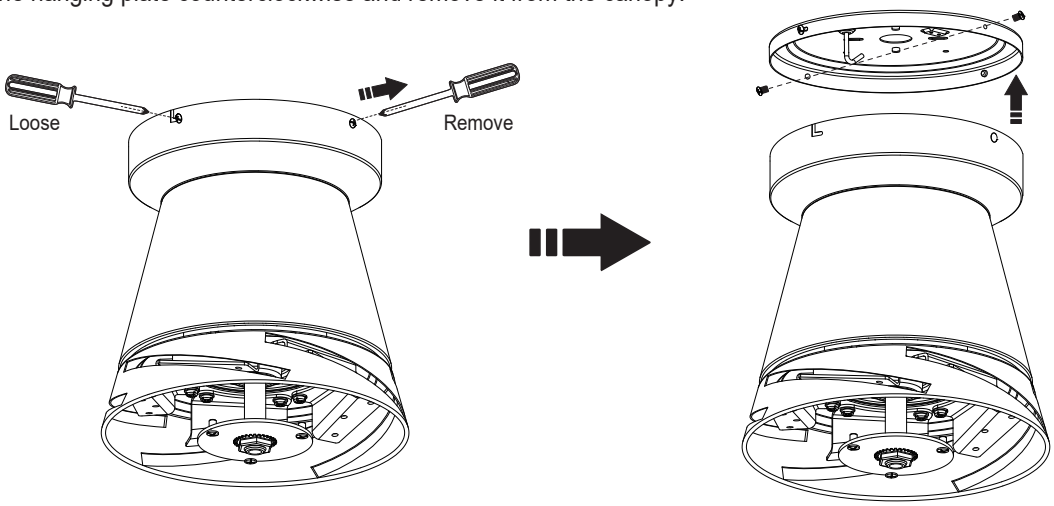

⚠ WARNING:

To avoid possible electrical shock, before installing your ceiling fan, disconnect the power by turning off the circuit breakers to the outlet box associated with the wall switch location.

Step 2:

Option 1: Concrete ceiling

Use 2 mounting screws and washers provided when:
Securing to existing ceiling fan-rated outlet box. Make sure it is securely installed and is acceptable for fan support of 15.9kg (35 lbs) or less.

Option 2: Wood ceiling

Use 4 wood screws when:
Securing to support structure with apporved electrical outlet box.
Drill 4 holes in support structure to aid in securing hanging plate.

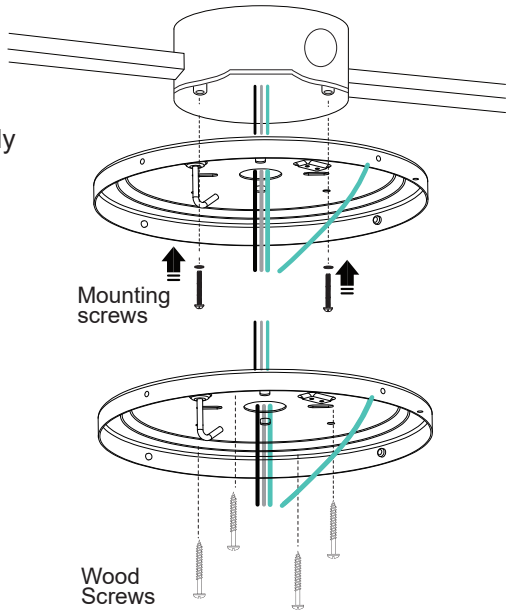

HANGING YOUR CEILING FAN BODY

Step 1:

Hook the ceiling fan body assembly into the fixed “L” hook of the hanging plate.

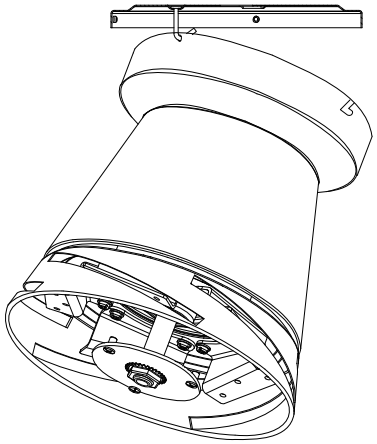

Step 2:

a. Connect the wires (white to white, black to black, ground to ground) from the ceiling to the receiver and hanging plate using wire nuts provied.
b. Insert the motor wire and light wire to the receiver.
c. Put the receiver into the canopy.
Note: Use the canopy to place the exceeded wires.

WIRING MUST BE UP TO CODE. All wiring must be in accordance with national and local electrical codes. If you are unfamiliar with wiring or in doubt, consult a qualified electrician.

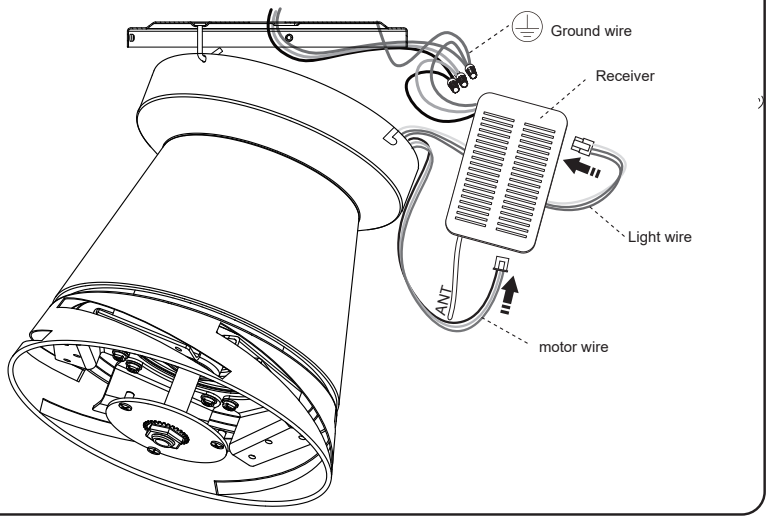

Step 3:

Attach ceiling fan body assembly to the hanging plate by placing screws into the key hole slots. Rotate so that screws slide into the narrow ends of the slots.

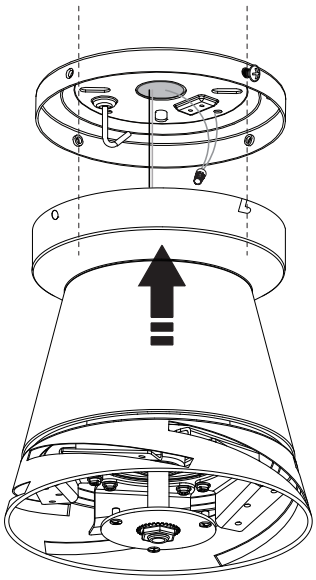

Step 4:

Use the 2 screws removed to lock the ceiling fan body assembly and the hanging plate tightly. Tighten the all screws firmly.

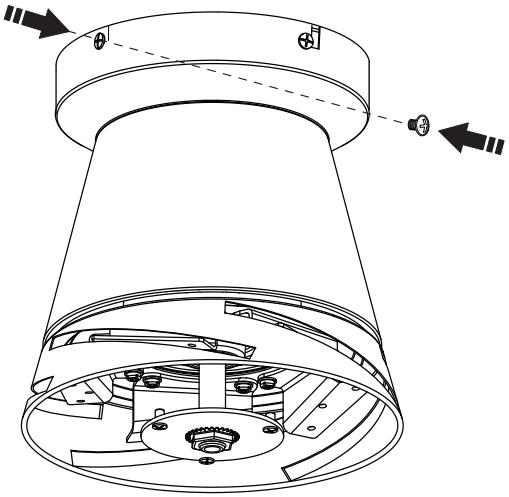

ASSEMBLING THE BLADES

Insert the fan blade to the fan-motor assembly, attach the blade to the fan blade bracket of the fan-motor assembly using the blade screws and washers provided, tighten them firmly. Complete 5 blades assembly.

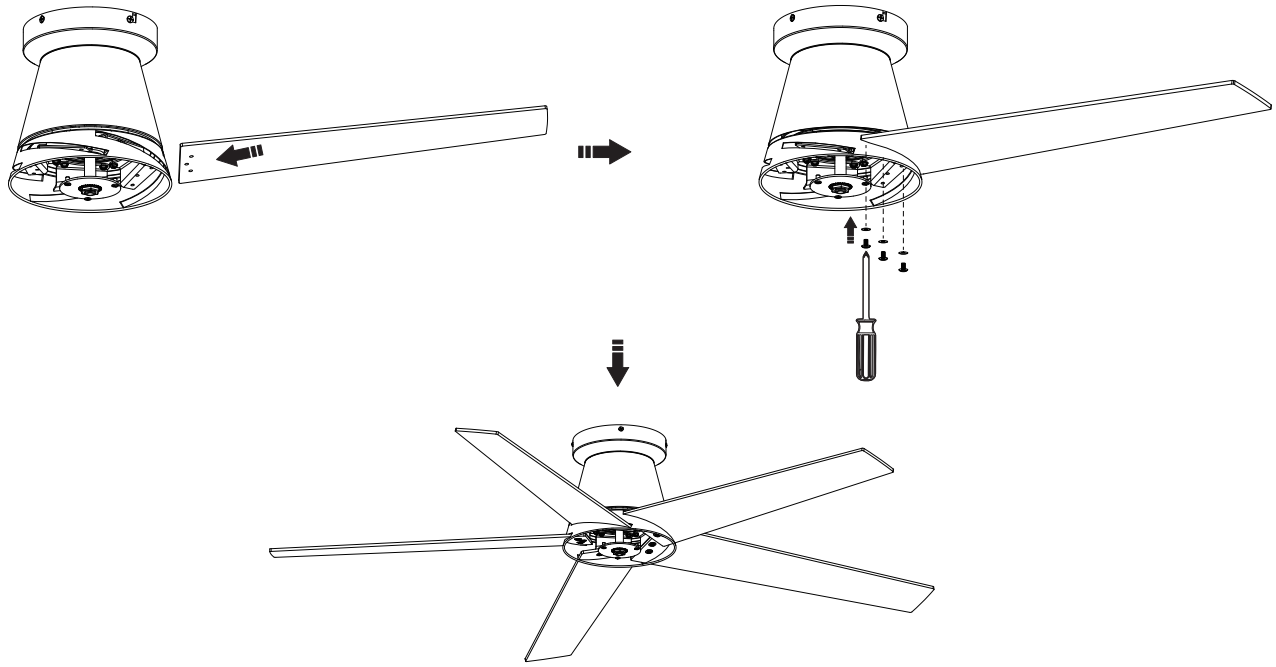

ASSEMBLING THE LIGHT KIT

Step 1:

Remove 3 screws from the ceiling fan body, place the screws for subsequent.

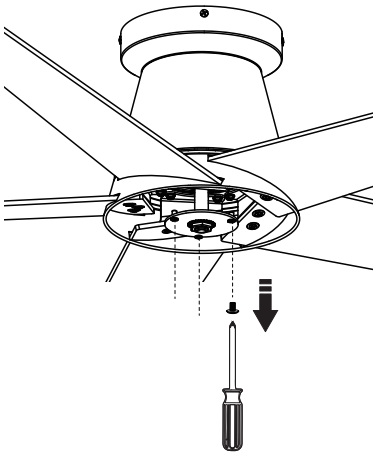

Step 2:

Connect the wires of the ceiling fan body with light kit. Attach the light kit to the ceiling fan body using removed 3 screws and tighten firmly.

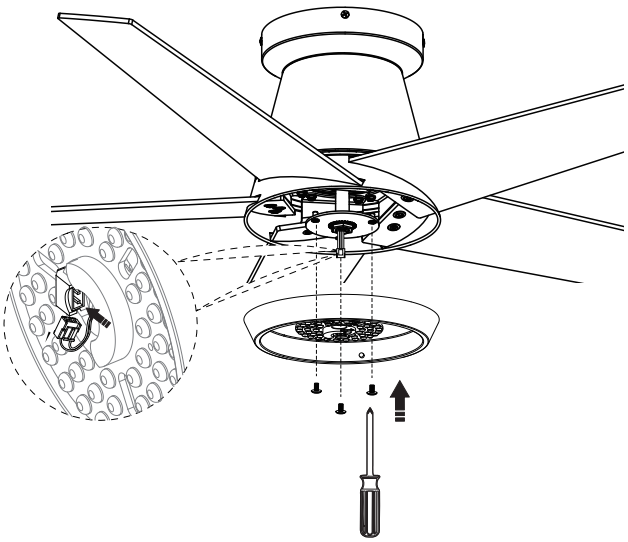

ASSEMBLING THE LIGHT SHADE

Rotate the light shade clockwise to securely fasten it into place.

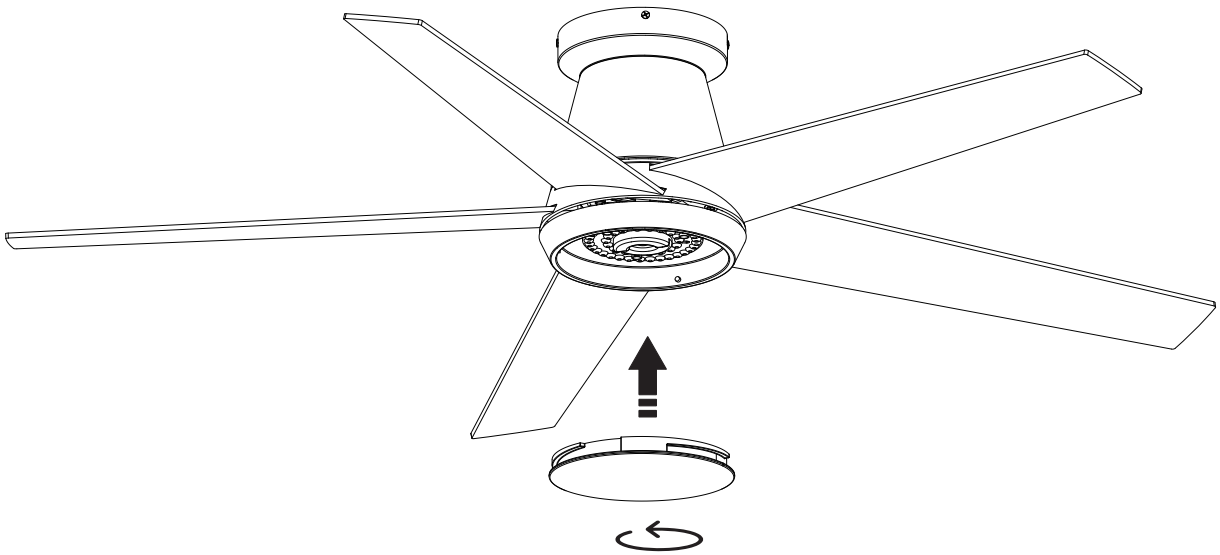

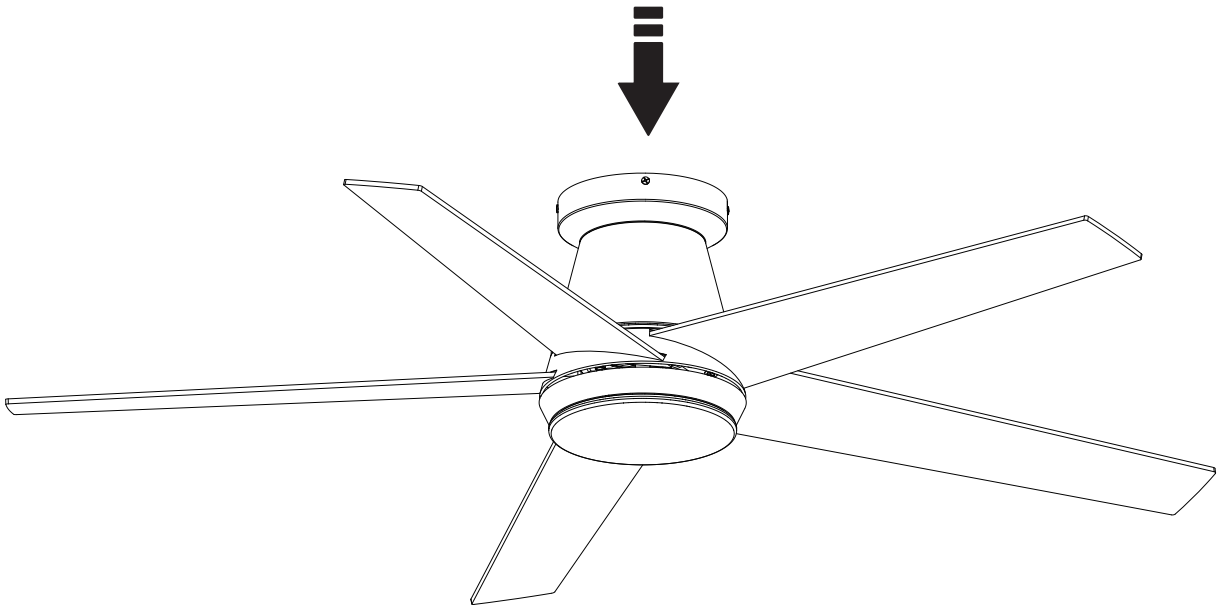

PRODUCT SIZE

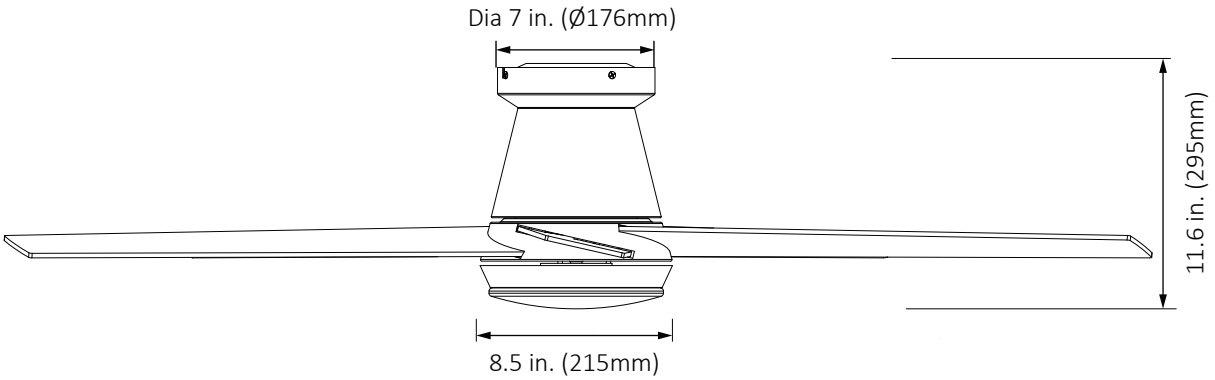

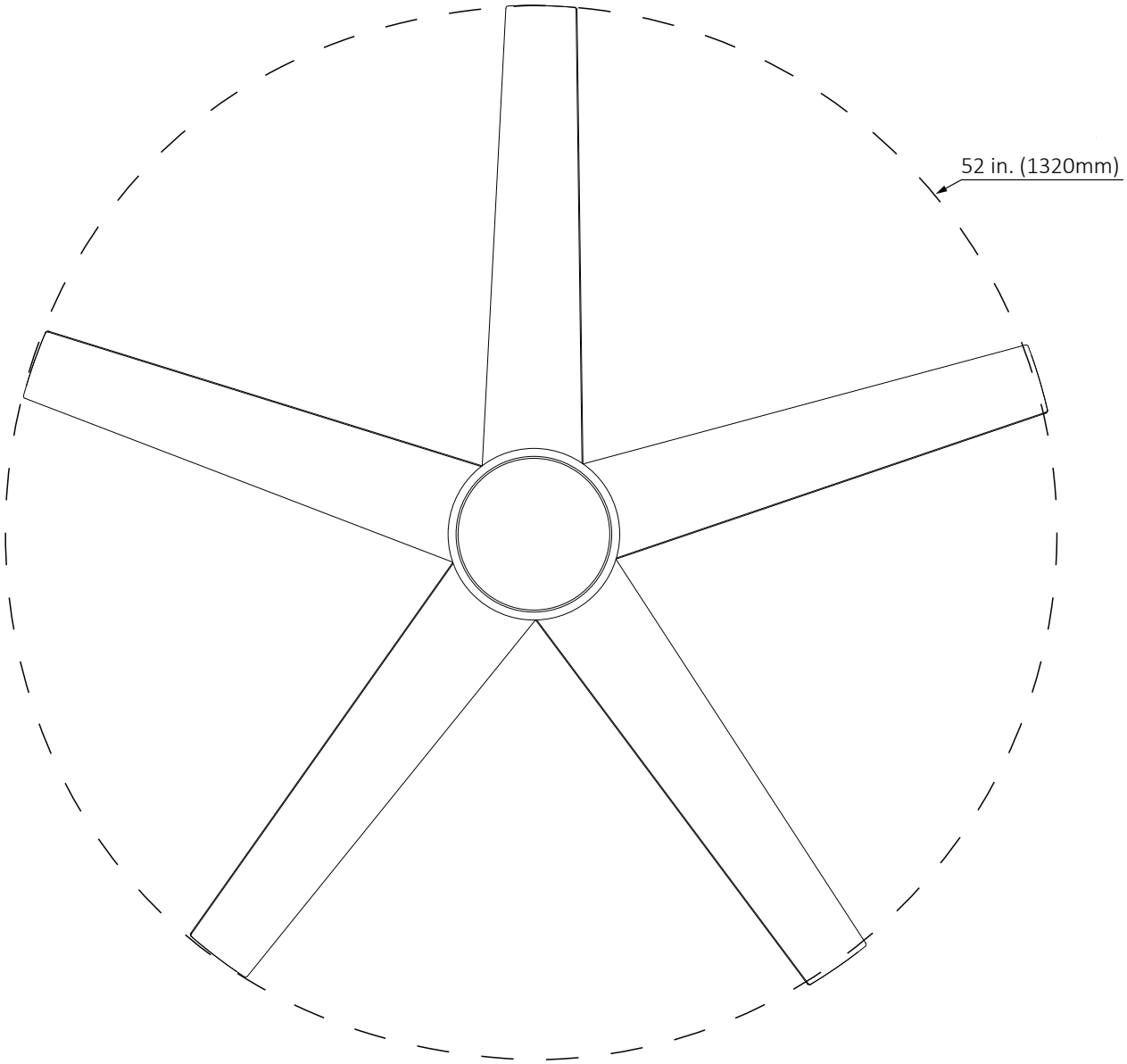

REMOTE CONTROL OPERATION

Control buttons

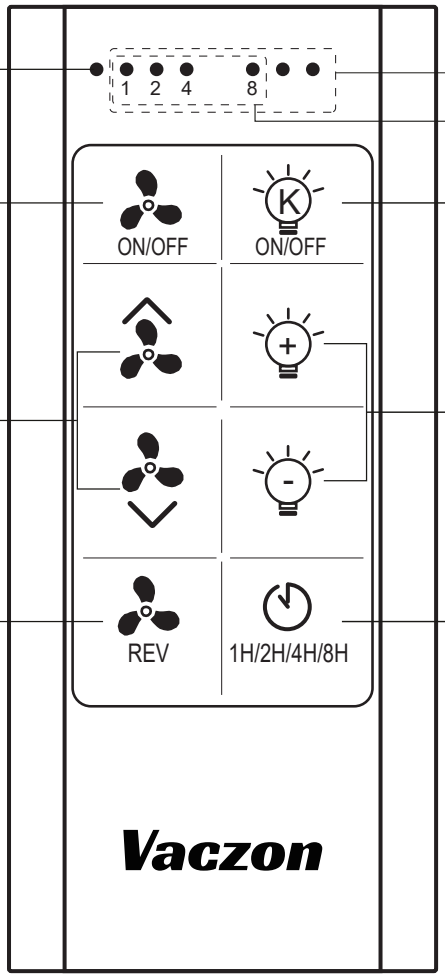

LED Indicator

Speed setting Indicator

Time setting Indicator

Power Switch

Press to turn the power ON/OFF
Within 5 seconds after power on, hold press to match code.

Light Switch & CCT Setting

- Press to turn the light ON/OFF
- Hold press 2 seconds the key to change the CCT to 3000K/4000K/6500K

Fan Speed Setting

- Press key, fan speed 1 to 6 levels
- Press key, fan speed 6 to 1 level

Fan CCT Setting

- Press key, light dimmer +
- Press key, light dimmer -

Forward and Reverse

Press to change the airflow direction.
Within 5 seconds after power on, hold press to clear code.

Timer Settings

- Press once time, fan auto off after 1hr
- Press twice time, fan auto off after 2hr
- Press 3 times, fan auto off after 4hr
- Press 4 times, fan auto off after 8hr

REMOTE CONTROL MATCHING CODE:

Within 5 seconds after power on, hold press the the key, when hear the buzzing sound, the code match is successful. If not, please repeat the above steps again.

- RF wireless digital transmission technology is adopted to realize the one-to-one control providing a rate of coincident code less than 1/50000. Same code number is attached to the back of the emitter and the receiver. It is required to return a pair of the same code number of emitter / receiver to the manufacturer for repair service in case of any damage.
- In a sufficient space, you can use the receiver at any angle, no worry about the direction.

REMOTE CONTROL OPERATION

INSTALL THE REMOTE CONTROL HOLDER

Use the two holes on the holder as a guide to drill two corresponding holes in the flat wall.

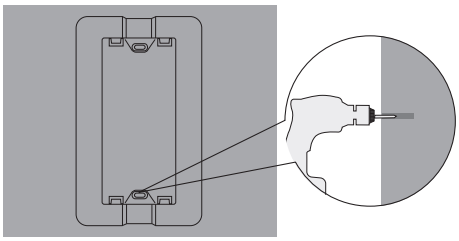

●

Insert two expansion screws into the holes and make them level with the flat wall.

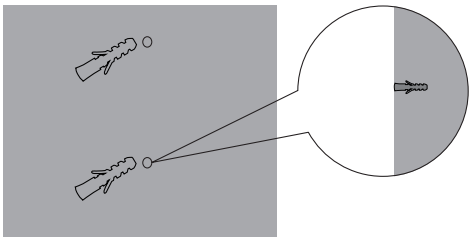

●●

Align the two holes on the holder with the two holes on the wall. Insert the two screws into the holes and tighten them using a screwdriver.

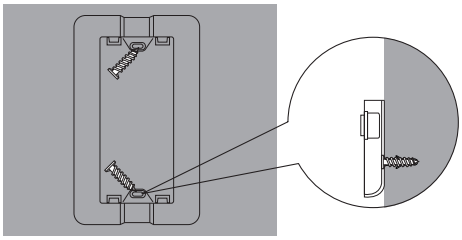

●●●

Store your remote control.

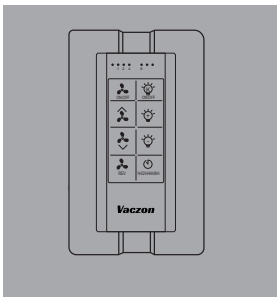

●●●●

NOTE: Install a CR2032, 3 volt lithium battery (Included). Open battery cover to remove insulation spacer before use remote control.

REPLACE THE BATTERIES

Remove the screw from the battery cover on the remote control using a Phillips head screwdriver. Pull up and remove battery cover.
Remove the old battery and replace a new CR2032, 3V battery. Install the battery cover removed earlier with the screw removed.

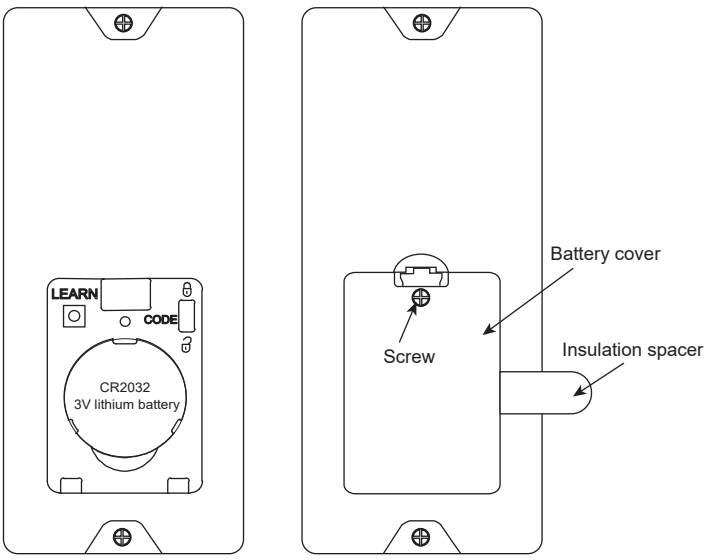

WARNING

TO REDUCE THE RISK OF SHOCK.THIS FAN MUST BE INSTALLED WITH A WALL CONTROL/SWITCH.

⚠ WARNING

- **INGESTION HAZARD:** This product contains a button cell or coin battery.
- **DEATH** or serious injury can occur if ingested.
- A swallowed button cell or coin battery can cause **Internal Chemical Burns** in as little as 2 hours.
- **KEEP** new and used batteries **OUT OF BEACH OF CHILDREN**
- **Seek immediate medical attention** if a battery is suspected to be swallowed or inserted inside any part of the body.



Remove and immediately recycle or dispose of used batteries according to local regulations and keep away from children. Do NOT dispose of batteries in household trash or incinerate.
Even used batteries may cause severe injury or death.
Call a local poison control center for treatment information.
Compatible battery type is CR2032, 3V.
Ensure the batteries are installed correctly with regard to polarity (+ and -).
Do not mix old and new batteries, different brands or types of batteries, such as alkaline, carbon-zinc, or rechargeable batteries.
Non-rechargeable batteries are not to be recharged. Exhausted batteries are to be removed from the product.
Do not force discharge, recharge, disassemble, heat above (manufacturer's specified temperature rating) or incinerate.
Doing so may result in injury due to venting, leakage or explosion resulting in chemical burns.
Remove and immediately recycle or dispose of batteries from equipment not used for an extended period of time according to local regulations.
Always completely secure the battery compartment. If the battery compartment does not close securely, stop using the product, remove the batteries, and keep them away from children.



WARNING INGESTION HAZARD:
This product contains a button cell or coin battery.

FCC STATEMENT

This device complies with Part 15 of the FCC Rules. Operation is subject to the following two conditions:
(1) this device may not cause harmful interference.
(2) this device must accept any interference received, including interference that may cause undesired operation.
Please note that changes or modifications of this product is not expressly approved by the party responsible for compliance could void the user's authority to operate the equipment. NOTE: This equipment has been tested and found to comply with the limits for a Class B digital device, pursuant to Part 15 of the FCC Rules. These limits are designed to provide reasonable protection against harmful interference in a residential installation. This equipment generates, uses and can radiate radio frequency energy and, if not installed and used in accordance with the instructions, may cause harmful interference to radio communications. However, there is no guarantee that interference will not occur in a particular installation.
If this equipment does cause harmful interference to radio or television reception which can be determined by turning the equipment off and on, the user is encouraged to try to correct the interference by one or more of the following measures:
-Reorient or relocate the receiving antenna.
-Increase the separation between the equipment and receiver.
-Connect the equipment into an outlet on a circuit different from that to which the receiver is connected.
-Consult the dealer or an experienced radio/TV technician for help.

APP OPERATION

Step 1: Search "eWeLink" from APP Store or Google Play to download the APP.
Step 2: Turn on the Bluetooth.
Step 3: Use the scan function of the APP scan QR code, add device, name the fan light, and choose the room for your fan.
Step 4: Pair code with the APP.
a. Click the buttons within 5 seconds when the light turn on, if the light flicks/when you hear a beep, it means the fan and app successfully paired. (APP Control Distance: within 65ft (20m))
b. The previous phone will jump out automa-tically if the next phone is paired successfully.

APP button function description:

Pairing Button

Timer Setting Mode

Natural Wind Mode

Sleep Wind Mode

The fan rotates in reverse to distribute warm air throughout a room.

The fan rotates forward.

White light

Natural light

Yellow light

Night light,10% bightness.

Not apply to these function follow:



CLEANING AND MAINTENANCE

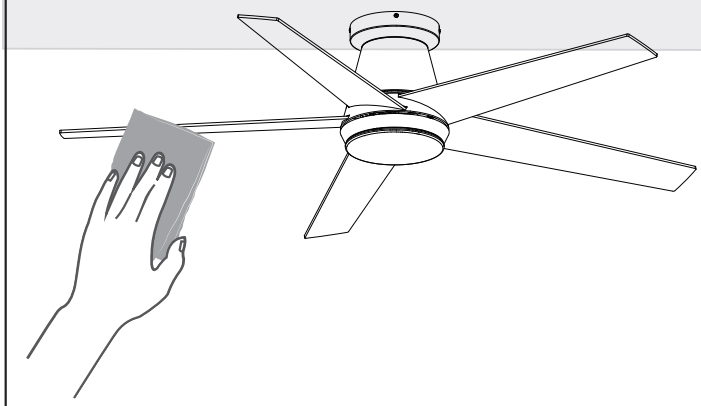

Clean the motor housing and blades with a soft brush or lint-free cloth to avoid scratching the finish.
At least twice each year,lower the canopy to check the downrod assembly and tighten all screws on the fan.

- Shut off the main power supply before you begin any maintenance task.
- DO NOT use water or a damp cloth to clean the fan.
- Cleaning products may damage the finishes.

TROUBLE SHOOTING

Problem	Solution
Fan Doesn't Work	· Make sure the power switch is on. · Check the circuit breaker to ensure the power is turned on. · Make sure the blades spin freely. · Turn off power from the circuit breaker, then loosen the canopy and check all the connections according to the wiring diagram
Excessive Wobbling	· Make sure the blades are properly installed on the ceiling fan body. · Turn the power off, support the fan carefuly, and check that the downrod ball is properly seated.
Remote Control of Fan is Erratic	· Make sure the battery is installed correctly. If the command indicator light keeps flashing, indicating low battery, install a fresh battery.
Remote Only Works Close to Fan	· Change battery
Noisy Operation	· Make sure the blades are properly installed. · Check to see if any of the blades are cracked. If so, replace all of the blades

If your problem is not listed or still persists, please contact our Customer Support.

Vaczon

We’re Here to Help!


1 (888) 275-3352


Customersupport@Vaczon.com


https://vaczon.com

MADE IN CHINA