Form No. 3465-540 Rev A

TORO®

Count on it.

Operator's Manual

GreensPro® 1260 Greens Roller

Model No. 44913—Serial No. 415300000 and Up

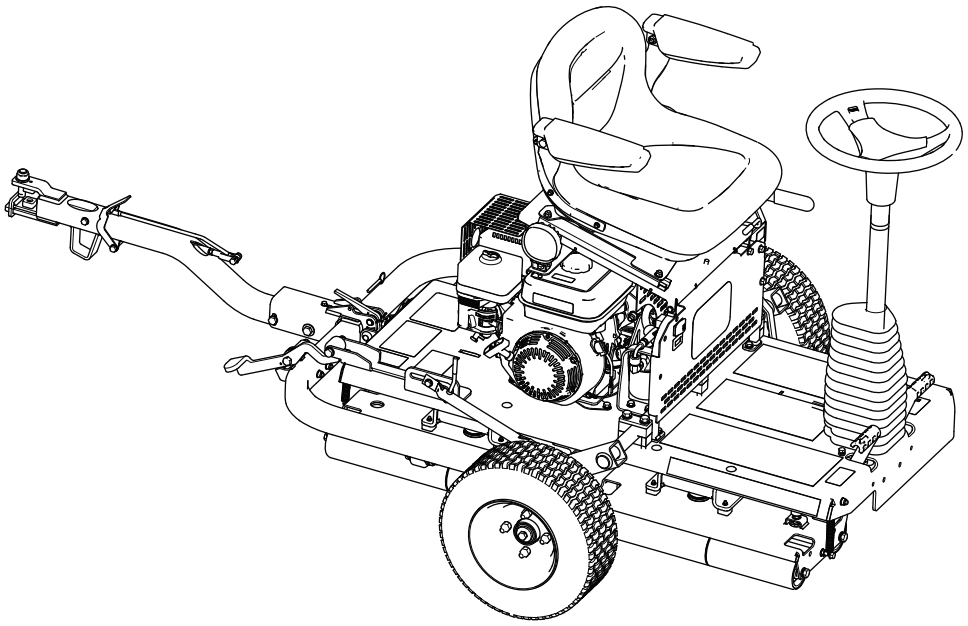

Register at www.Toro.com.
Original Instructions (EN)

CE UK CA

3465-540

This product complies with all relevant European directives; for details, please see the separate product specific Declaration of Conformity (DOC) sheet.

It is a violation of California Public Resource Code Section 4442 or 4443 to use or operate the engine on any forest-covered, brush-covered, or grass-covered land unless the engine is equipped with a spark arrester, as defined in Section 4442, maintained in effective working order or the engine is constructed, equipped, and maintained for the prevention of fire.

⚠ WARNING

CALIFORNIA
Proposition 65 Warning

The engine exhaust from this product contains chemicals known to the State of California to cause cancer, birth defects, or other reproductive harm.

Use of this product may cause exposure to chemicals known to the State of California to cause cancer, birth defects, or other reproductive harm.

Introduction

This machine is a ride-on greens roller intended for use by professional, hired operators in commercial applications. It is primarily designed for rolling greens, tennis courts, and other fine turf surfaces in parks, golf courses, sports fields, and on commercial grounds. Using this product for purposes other than its intended use could prove dangerous to you and bystanders.

Read this information carefully to learn how to operate and maintain your product properly and to avoid injury and product damage. You are responsible for operating the product properly and safely.

Visit www.Toro.com for product safety and operation training materials, accessory information, help finding a dealer, or to register your product.

Whenever you need service, genuine Toro parts, or additional information, contact an Authorized Service Dealer or Toro Customer Service and have the model and serial numbers of your product ready. Figure 1 identifies the location of the model and serial numbers on the product. Write the numbers in the space provided.

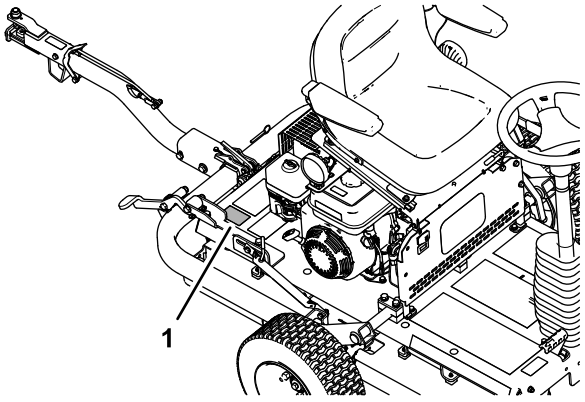

g279976

Figure 1

1. Location of the model and serial numbers

Model No. _____

Serial No. _____

This manual identifies potential hazards and has safety messages identified by the safety-alert symbol (Figure 2), which signals a hazard that may cause serious injury or death if you do not follow the recommended precautions.



g000502

Figure 2
Safety-alert symbol

This manual uses 2 words to highlight information. **Important** calls attention to special mechanical information and **Note** emphasizes general information worthy of special attention.

© 2023—The Toro® Company
8111 Lyndale Avenue South
Bloomington, MN 55420

Contact us at www.Toro.com.
Printed in the UK
All Rights Reserved

Contents

Safety 4
General Safety 4
Safety and Instructional Decals 4
Setup 7
1 Installing the Transport Wheels 8
2 Installing the Hitch Assembly 8
3 Removing the Machine from the Pallet 10
4 Lubricating the Machine 10
Product Overview 11
Controls 11
Engine Controls 12
Specifications 13
Attachments/Accessories 13
Before Operation 14
Before Operation Safety 14
Preparing to Use the Machine 14
Fuel Specification 14
Filling the Fuel Tank 15
During Operation 15
During Operation Safety 15
Starting the Engine 16
Shutting Off the Engine 16
Transporting the Machine 17
Operating the Machine 19
Operating Tips 19
After Operation 19
After Operation Safety 19
Hauling the Machine 19
Maintenance 20
Maintenance Safety 20
Recommended Maintenance Schedule(s) 20
Notation for Areas of Concern 21
Daily Maintenance Checklist 21
Pre-Maintenance Procedures 22
Preparing for Maintenance 22
Raising the Operator's Seat 22
Lowering the Operator's Seat 23
Lubrication 23
Lubricating the Drive-Roller Bearing 23
Engine Maintenance 24
Engine Safety 24
Engine Oil Specification 24
Checking the Engine-Oil Level 24
Changing the Engine Oil 25
Checking the Air-Filter Elements 26
Servicing the Air Cleaner 27
Servicing the Spark Plug 27
Checking and Adjusting the Valve Clearance 28
Fuel System Maintenance 28
Cleaning the Sediment Cup 28
Electrical System Maintenance 29
Checking the Safety-Interlock System 29
Brake Maintenance 29
Checking the Parking Brake 29
Adjusting the Parking Brake 29
Hydraulic System Maintenance 30
Hydraulic System Safety 30
Checking the Hydraulic Hoses and Fittings 30
Checking the Hydraulic-Fluid Level 31
Hydraulic Fluid Specifications 31
Changing the Hydraulic Fluid and Filter 32
Chassis Maintenance 33
Checking the Tire Air Pressure 33
Checking the Machine for Loose Hardware 33
Cleaning 34
Cleaning the Machine 34
Storage 35
Preparing the Machine for Short-Term Storage 35
Preparing the Machine for Long-Term Storage 35
Storing the Machine 35

Safety

This product complies with all relevant European directives; for details, please see the separate product specific Declaration of Conformity (DOC) sheet

General Safety

This product is capable of causing personal injury. Always follow all safety instructions to avoid serious personal injury.

- Read and understand the contents of this *Operator's Manual* before starting the engine.
- Use your full attention while operating the machine. Do not engage in any activity that causes distractions; otherwise, injury or property damage may occur.
- Do not put your hands or feet near moving components of the machine.
- Do not operate the machine without all guards and other safety protective devices in place and working on the machine.
- Shut off the engine, remove the key (if equipped), and wait for all movement to stop before you leave the operator's position. Allow the machine to cool before adjusting, servicing, cleaning, or storing it.

Improperly using or maintaining this machine can result in injury. To reduce the potential for injury, comply with these safety instructions and always pay attention to the safety-alert symbol ⚠, which means Caution, Warning, or Danger—personal safety instruction. Failure to comply with these instructions may result in personal injury or death.

Safety and Instructional Decals

Safety decals and instructions are easily visible to the operator and are located near any area of potential danger. Replace any decal that is damaged or missing.

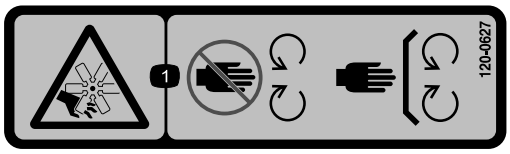

decal120-0627

120-0627

1. Cutting/dismemberment hazard, fan—stay away from moving parts, keep all guards and shields in place.

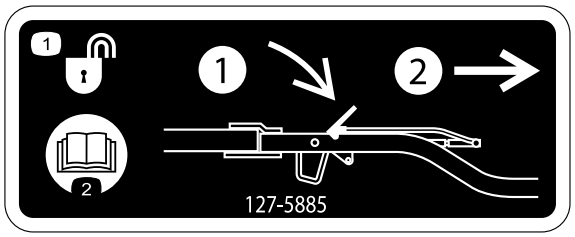

decal127-5885

127-5885

1. Hitch unlock—1) push down on the latch; 2) pull out the hitch.
2. Read the *Operator's Manual*.

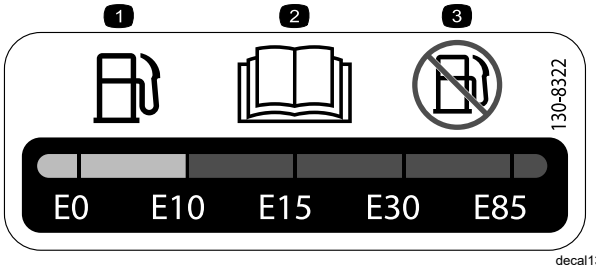

decal130-8322

130-8322

1. Use only gasoline that contains 10% ethanol by volume (E10) or less.
2. Read the *Operator's Manual*.
3. Do not use gasoline that contains more than 10% ethanol by volume (E10).

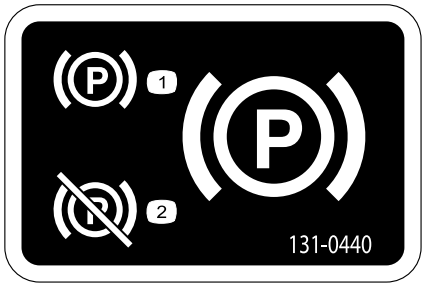

decal131-0440

131-0440

1. Parking brake—engage
2. Parking brake—disengage



decal133-1701

133-1701

1. Warning—read the *Operator's Manual*; do not operate the machine unless you have received training.
2. Warning—wear hearing protection.
3. Warning—keep bystanders away from the machine.
4. Warning—keep away from moving parts; keep all guards and shields in place.
5. Tipping hazard—do not operate the machine near water; stay away from embankments or dropoffs.



decal133-8062

133-8062

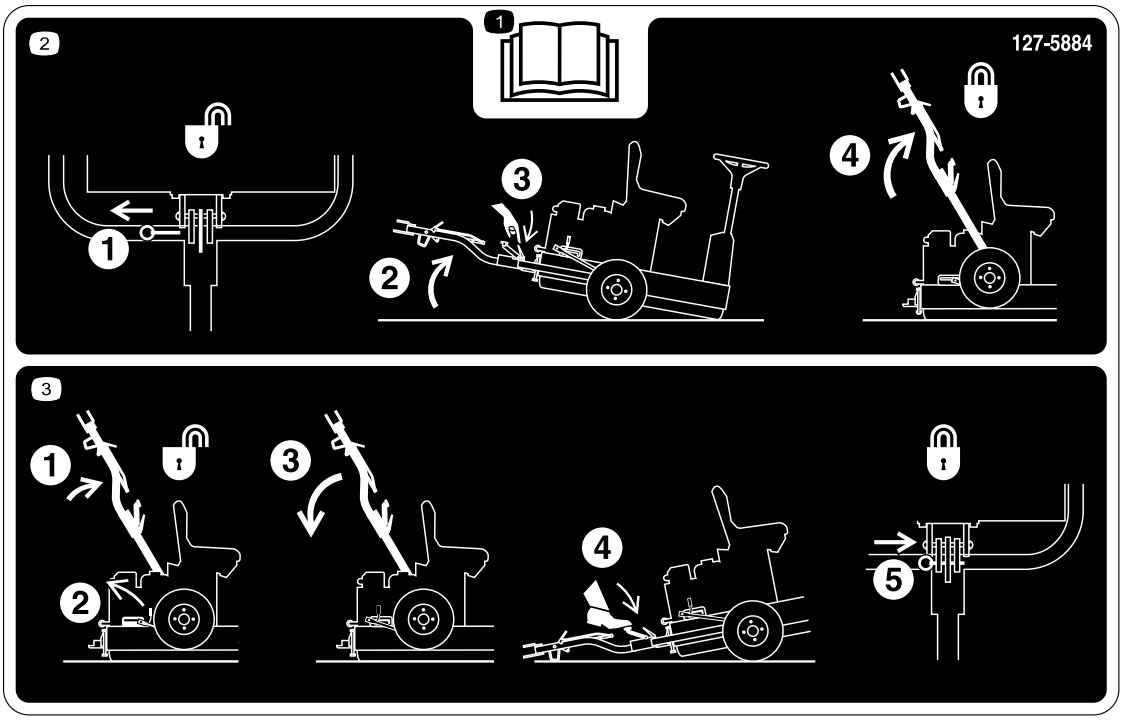

decal127-5884

127-5884

1. Read the *Operator's Manual*.
2. 1) Pull the lock pin; 2) Tip the machine up; 3) Unlatch the hitch; 4) Raise the hitch until the lever latch locks in the slide.
3. 1) Push the hitch up; 2) Release the latch lever; 3) Pull the hitch down; 4) Step on the foot pedal until the hitch snaps into place; 5) Insert the lock pin.

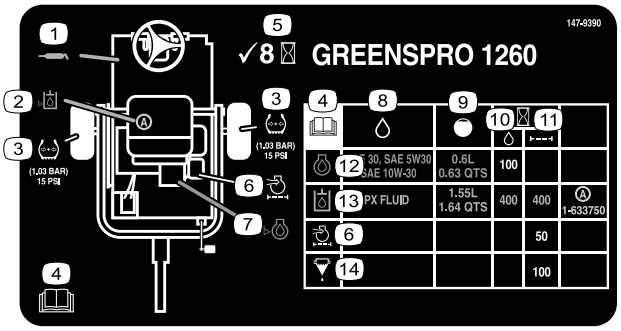

decal147-9390

147-9390

1. Grease point
2. Check hydraulic fluid level
3. Tire pressure
4. Read the *Operator's Manual*.
5. Check every 8 hours
6. Engine air filter
7. Check engine oil level
8. Fluid
9. Capacity
10. Fluid interval (hours)
11. Filter interval (hours)
12. Engine oil
13. Hydraulic fluid
14. Fuel/water separator

Setup

Loose Parts

Use the chart below to verify that all parts have been shipped.

Procedure	Description	Qty.	Use
1	Transport wheel	2	Install the transport wheels.
2	Lock bracket Bolt (M10 x 30 mm) Lock washer (M10) Washer (M10) Nut (M10) Hitch assembly Bolt (M10 x 100 mm) Locknut (M10) Bolt (M12 x 100 mm) Washer (M12) Locknut (M12) Spacer washer (when applicable)	1 4 4 6 4 1 1 1 1 2 1 2	Install the hitch assembly.
3	No parts required	–	Remove the machine from the pallet.
4	Lubricants (not included)	–	Lubricate the machine.

Media and Additional Parts

Description	Qty.	Use
Operator's Manual Engine owner's manual	1 1	Read the manuals before operating the machine.
Certificate of Compliance	1	The certificate is required for European CE compliance.

1

Installing the Transport Wheels

Parts needed for this procedure:

2	Transport wheel

Removing the Shipping Brackets

1. Remove the lug nuts securing the wheel hubs to the shipping bracket (Figure 3).

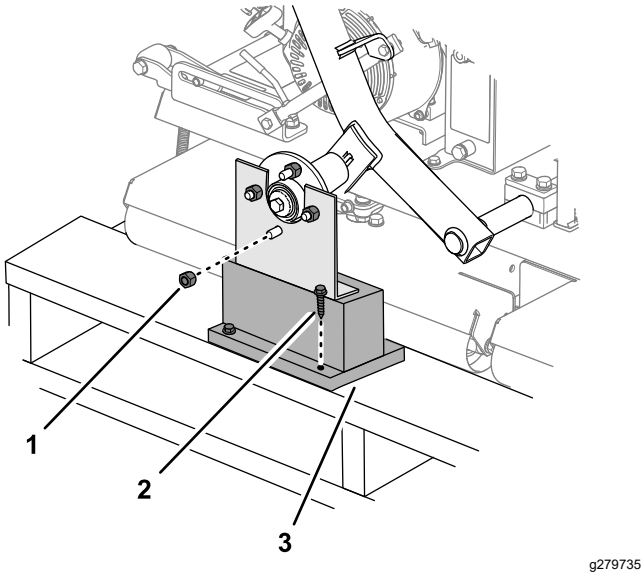

g279735

Figure 3

1. Lug nut
2. Lag bolt
3. Shipping bracket

2. Remove the other lug nut threaded onto the wheel-hub stud (Figure 3).
3. Remove the lag bolts that secure the shipping brackets to the pallet, and remove the bracket (Figure 3).
4. Repeat steps 1 through 3 for the shipping bracket at the other side of the machine.

Installing the Wheels

1. Loosely assemble the 2 transport wheels onto the wheel hubs with the lug nuts that you removed in Removing the Shipping Brackets (page 8).

   Note: You will torque the lug nuts at the end of 2 Installing the Hitch Assembly (page 8).
2. Adjust the tire air pressure to 103 kPa (15 psi).

2

Installing the Hitch Assembly

Parts needed for this procedure:

1	Lock bracket
4	Bolt (M10 x 30 mm)
4	Lock washer (M10)
6	Washer (M10)
4	Nut (M10)
1	Hitch assembly
1	Bolt (M10 x 100 mm)
1	Locknut (M10)
1	Bolt (M12 x 100 mm)
2	Washer (M12)
1	Locknut (M12)
2	Spacer washer (when applicable)

Procedure

1. Install the lock bracket to the frame of the machine as shown in Figure 4.

   Note: Torque the nuts to 52 N·m (38 ft-lb).

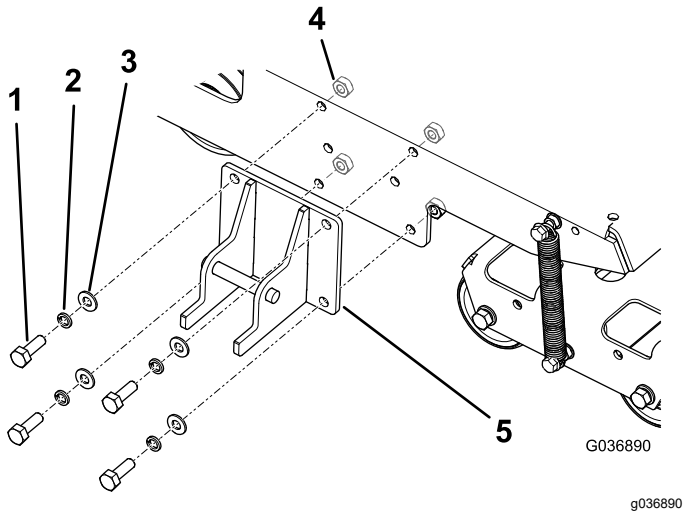

g036890

Figure 4

1. Bolt—M10 x 30 mm (4)
2. Lock washer—M10 (4)
3. Washer—M10 (4)
4. Nut—M10 (4)
5. Lock bracket

2. Secure the hitch to the hitch pivot bracket with the appropriate hardware; refer to Figure 5.

- In the front holes, use a bolt (M10 x 100 mm), 2 washers (M10), and a locknut (M10).
- In the rear holes, use a bolt (M12 x 100 mm), 2 washers (M12), and a locknut (M12).
- If your machine has a third washer included with each bolt, use those washers as spacers between the hitch and the inside of the hitch pivot bracket (Figure 6).

Note: Use the holes in the hitch pivot bracket to match the hitch height of the tow-vehicle hitch.

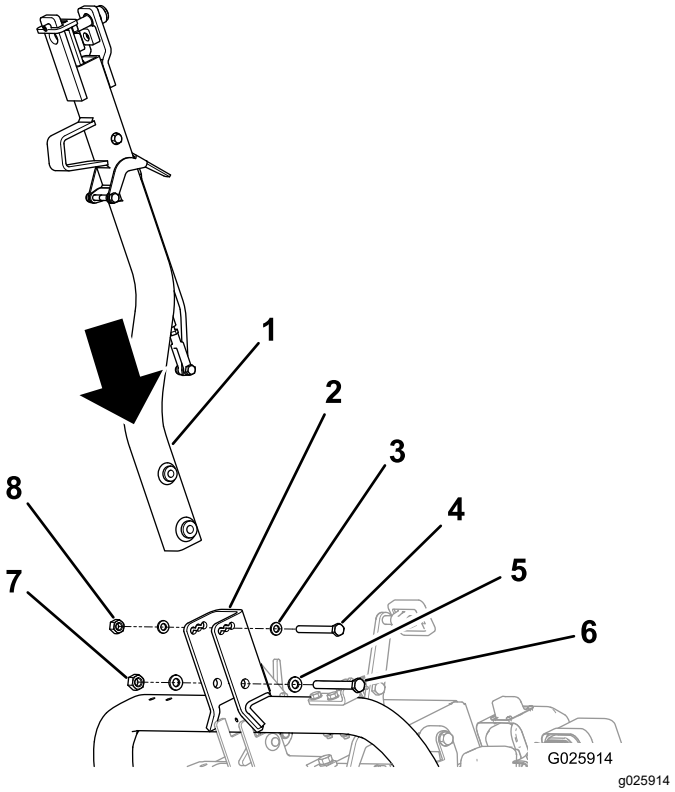

Figure 5

1. Hitch
2. Hitch pivot bracket
3. Washer—M10 (2)
4. Bolt (M10)
5. Washer—M12 (2)
6. Bolt (M12)
7. Locknut (M12)
8. Locknut (M10)

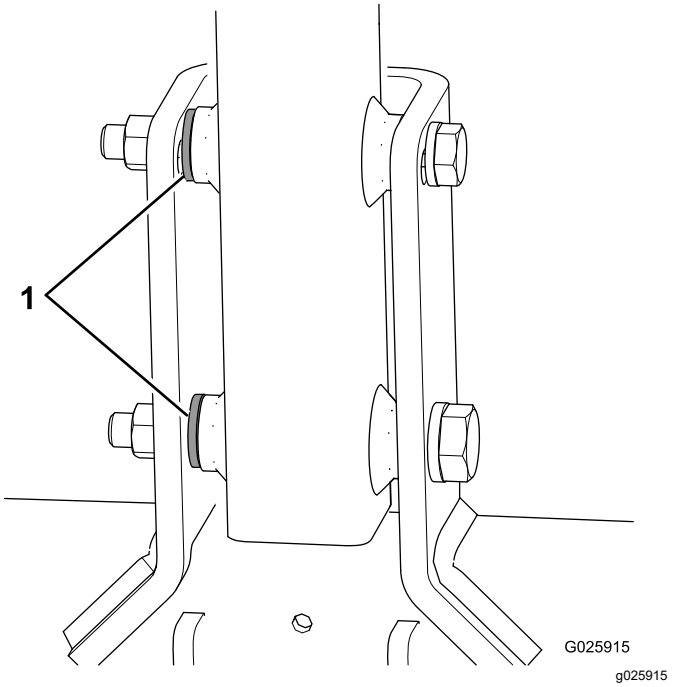

Figure 6

1. Spacer washers

3. Tighten the small bolt to 73 N·m (54 ft-lb) and the large bolt to 126 N·m (93 ft-lb).
4. Push up on the hitch assembly until the latch lever is unlocked from the slide detent (Figure 7).

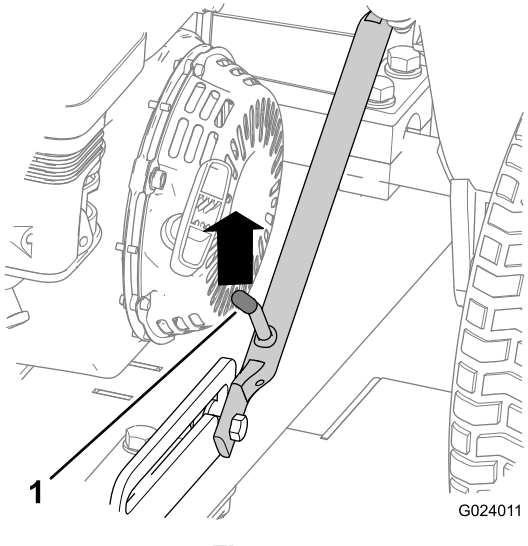

Figure 7

1. Latch lever

5. Pull the hitch down.
6. If installed, remove the locking pin from the latch (Figure 8).

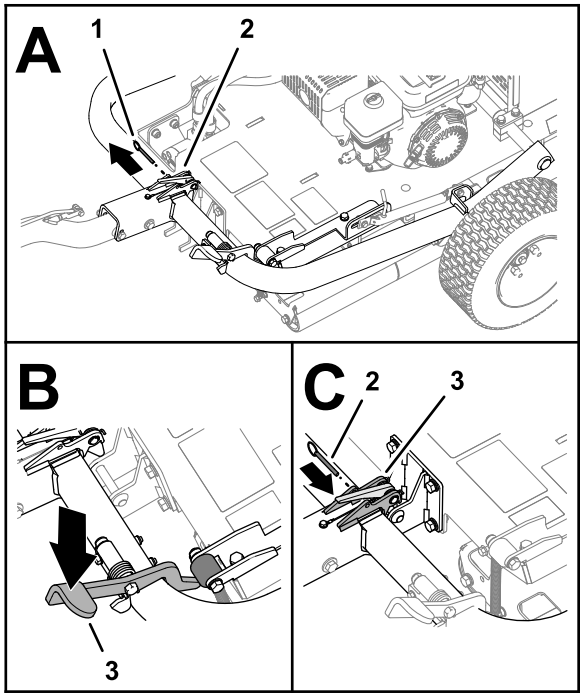

Figure 8

1. Locking pin
2. Latch
3. Hitch pedal

7. Step on the hitch pedal until the hitch locks into place (Figure 8).
8. Insert the locking pin through the holes in the latch (Figure 8).
9. Torque the lug nuts on the transport wheels to 108 N·m (80 ft-lb).

3

Removing the Machine from the Pallet

No Parts Required

Procedure

1. Remove the wood blocks at the hitch end of the pallet.

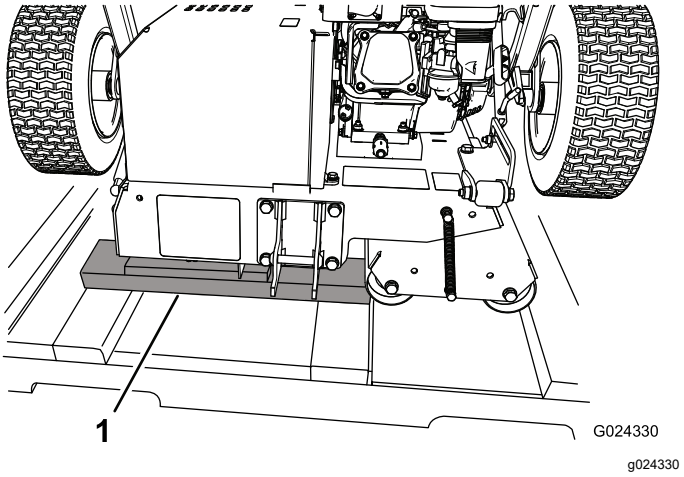

Figure 9

1. Wood blocks

2. Place some wood boards on the ground at the end of the pallet.

   Note: The height of the wood boards should be slightly lower than the pallet. You can use pieces removed from the sides and/or ends of the crate.
3. Carefully roll the machine off the pallet, onto the wood boards, and then to the ground.

   Important: **Ensure that the rollers do not contact the pallet as the machine drops to the ground.**
4. Remove any remaining packaging.

4

Lubricating the Machine

Parts needed for this procedure:

–	Lubricants (not included)

Procedure

Before you operate the machine, lubricate it to ensure proper operating characteristics; refer to Lubricating the Drive-Roller Bearing (page 23). Failure to properly lubricate the machine will result in premature failure of critical parts.

Product Overview

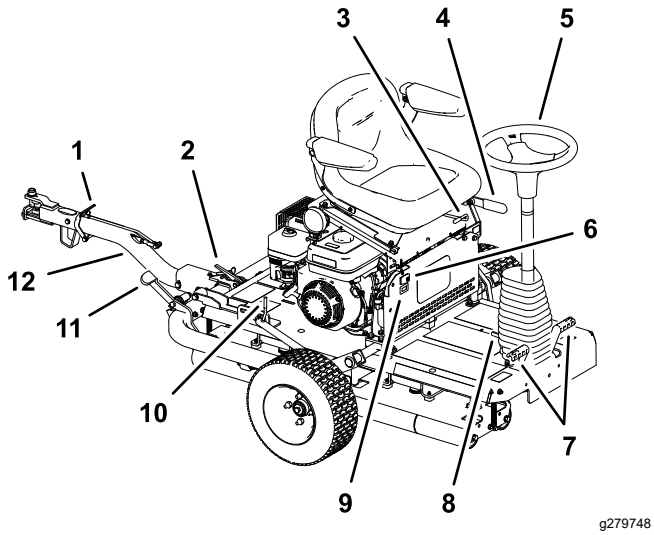

Figure 10

1. Hitch-lock lever
2. Hitch latch
3. Seat-adjustment lever
4. Parking brake
5. Steering wheel
6. Light switch
7. Motion pedals
8. Tilt-steering pedal
9. Hour meter
10. Latch lever
11. Hitch pedal
12. Hitch assembly

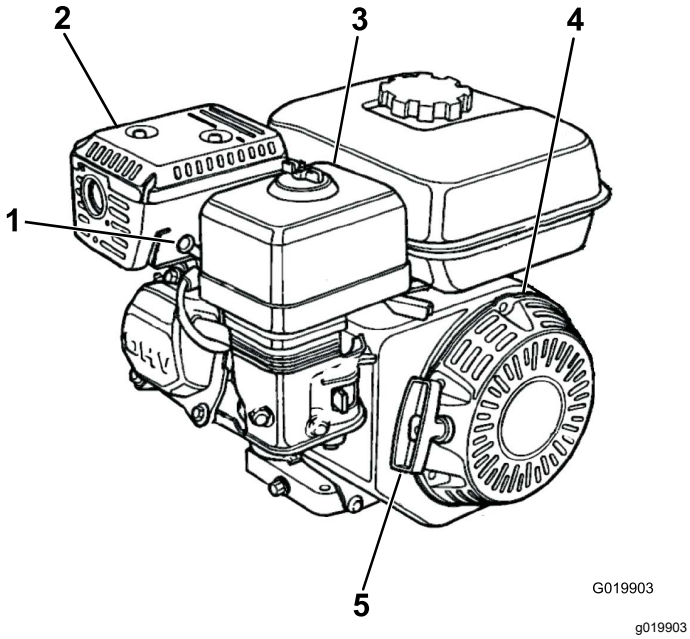

Figure 11

1. Spark plug
2. Muffler
3. Air cleaner
4. Recoil starter
5. Recoil-start handle

Controls

Parking Brake

Engage the parking brake to allow the machine to start. To engage the parking brake (Figure 12), pull back on the parking-brake lever. To disengage it, push the lever forward.

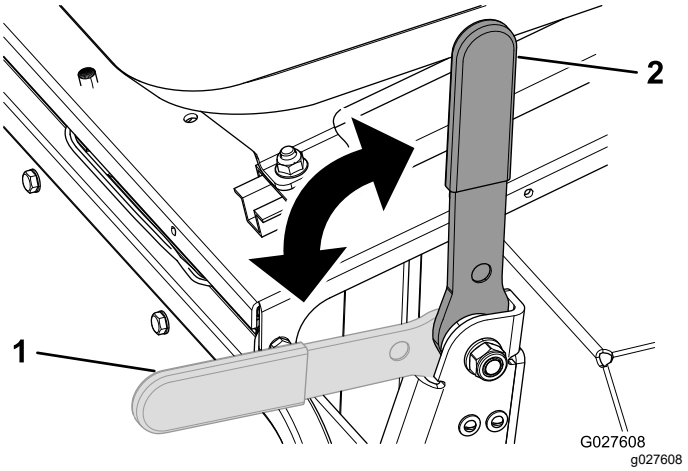

Figure 12

1. Parking brake—disengaged
2. Parking brake—engaged

Steering Wheel

Turn the steering wheel (Figure 10) clockwise to turn the machine in the forward direction.

Turn the steering wheel counterclockwise to turn the machine in the rearward direction.

Note: As the direction changes at the end of every run, you will need to practice with the machine to become accustomed to the steering.

The steering wheel controls the angle of the smoothing rollers, which in turn steer the machine. The amount the wheel can be turned is limited, so the turning radius of the machine is large.

Tilt-Steering Pedal

To tilt the steering wheel toward you, press the foot pedal (Figure 10) down, pull the steering tower toward you to the most comfortable position, and release the pedal.

Motion Pedals

The foot-operated motion pedals (Figure 10), located to either side of the base of the steering wheel, control the motion of the drive roller. The pedals are connected so that they cannot both be pressed down at the same time, you can press only 1 pedal at a

time. If you press down the right pedal, the machine moves to the right, and if you press down the left pedal, the machine moves to the left. The further you press a pedal, the faster your speed in that direction.

Note: Come to a full stop before changing the direction of the machine; do not abruptly change the pedal direction. Doing so overstresses the traction drive line, resulting in premature failure of drive-line components. Actuate the pedals slowly and smoothly to avoid potential turf scuffing damage as well as drive-line component damage.

When operating the machine on hills, ensure that the drive roller is on the downhill side for adequate traction. Failure to do so may result in turf damage.

Hitch Assembly

Use the hitch assembly (Figure 10) to tow the machine and to lower/raise the transport wheels.

Seat-Adjustment Lever

You can move the seat forward or backward. Rotate the seat-adjustment lever (Figure 10) upward and slide the seat forward or backward, then release the lever.

Armrest-Adjustment Bolts

You can adjust each armrest by turning the respective adjustment bolt (Figure 13).

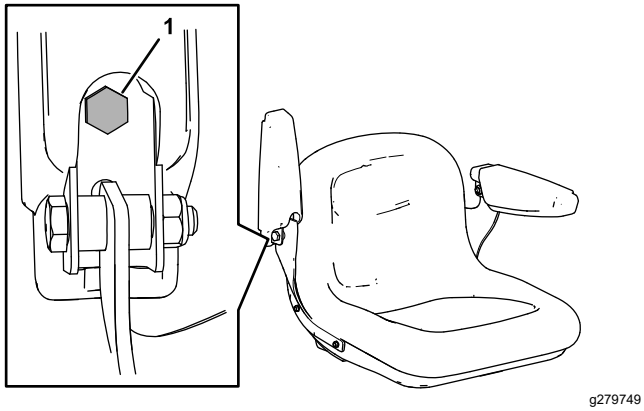

g279749

Figure 13

1. Adjustment bolt

Light Switch

Use the light switch to turn the lights on and off.

Push the ON position of the switch to turn the lights on. Once released, the switch remains in the RUN position.

Push to the OFF position of the switch to turn the lights off.

Note: The switch stays in the RUN position when the machine is turned off.

The lights do not automatically come back on when the machine is turned off then on again. Push the ON position to turn the lights back on.

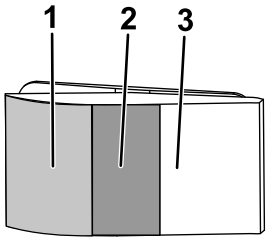

g338091

Figure 14

1. On position
2. Run position
3. Off position

Hour Meter

The hour meter (Figure 10) indicates the total hours of machine operation.

Engine Controls

Note: Refer to your engine owner's manual for additional engine-control information.

On/Off Switch

The On/Off switch (Figure 15) allows the operator of the machine to start and shut off the engine. This switch is located on the front of the engine. Rotate the On/Off switch to the ON position to start and run the engine. Rotate the On/Off switch to the OFF position to shut off the engine.

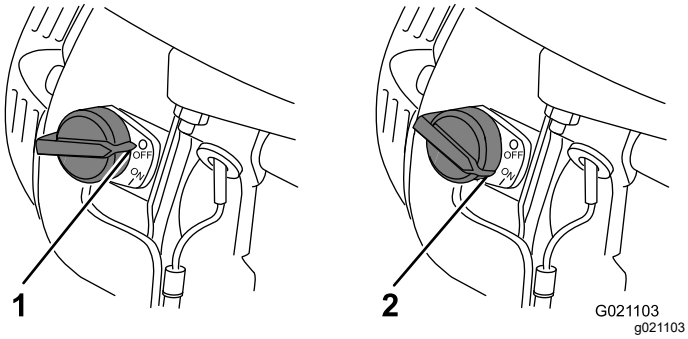

Figure 15

1. OFF position
2. ON position

Choke Lever

The choke lever (Figure 16) is required when starting a cold engine. Before pulling the recoil-start handle, move the choke lever to the CLOSED position. Once the engine is running, move the choke lever to the OPEN position. Do not use the choke if the engine is already warmed up or if the air temperature is high.

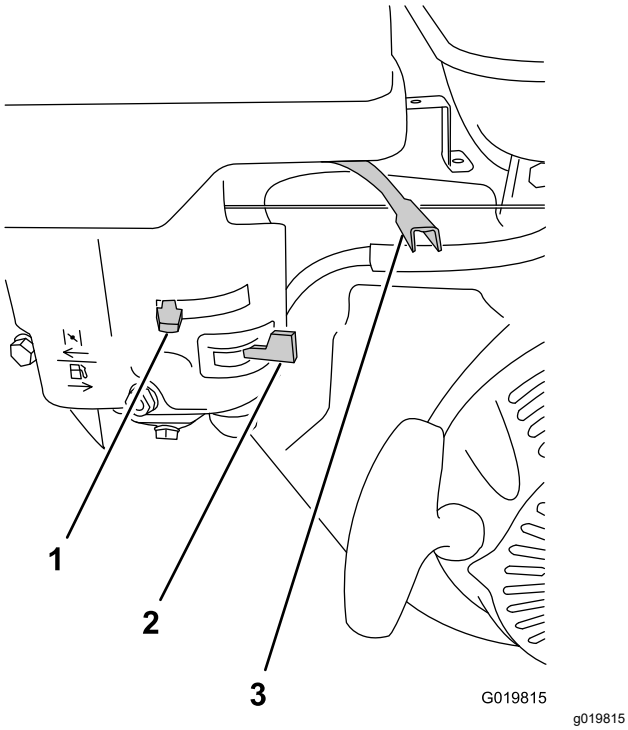

Figure 16

1. Choke lever
2. Fuel-shutoff valve
3. Throttle lever

Throttle Lever

The throttle lever (Figure 16) is located next to the choke control; it controls the speed of the engine and therefore controls the speed of the machine. For best rolling performance, set this control to the FAST position.

Fuel-Shutoff Valve

The fuel-shutoff valve (Figure 16) is located underneath the choke lever. Move it to the open position before attempting to start the engine. Once you have finished using the machine and you have turned the engine off, move the fuel-shutoff valve to the CLOSED position.

Recoil-Start Handle

To start the engine, pull the recoil-start handle (Figure 11) quickly to turn the engine over. The controls on the engine described above must all be set correctly for the engine to start.

Oil-Level Switch

The oil-level switch is located inside the engine; it prevents the engine from running if the oil level falls below the safe operating limit.

Specifications

Weight	308 kg (679 lb)
Length	136 cm (53.5 inches)
Width	122 cm (48.0 inches)
Height	107 cm (42.2 inches)
Maximum ground speed	12.8 km/h (8 mph) @ 3600 rpm

Attachments/Accessories

A selection of Toro approved attachments and accessories is available for use with the machine to enhance and expand its capabilities. Contact your Authorized Service Dealer or authorized Toro distributor or go to www.Toro.com for a list of all approved attachments and accessories.

To ensure optimum performance and continued safety certification of the machine, use only genuine Toro replacement parts and accessories. Replacement parts and accessories made by other manufacturers could be dangerous, and such use could void the product warranty.

Operation

Before Operation

Before Operation Safety

General Safety

- Shut off the machine and wait for all movement to stop before you leave the operator's position. Allow the machine to cool before adjusting, servicing, cleaning, or storing it.
- Never allow children or untrained people to operate or service the machine. Local regulations may restrict the age of the operator. The owner is responsible for training all operators and mechanics.
- Become familiar with the safe operation of the equipment, operator controls, and safety signs.
- Know how to stop the machine and engine quickly.
- Check that operator-presence controls, safety switches, and shields are attached and functioning properly. Do not operate the machine unless they are functioning properly.
- Before operating, always inspect the machine to ensure that the components and fasteners are in good working condition. Replace worn or damaged components and fasteners.
- Inspect the area where you will use the machine and remove all objects that the machine could throw.

Fuel Safety

- Use extreme care in handling fuel. It is flammable and its vapors are explosive.
- Extinguish all cigarettes, cigars, pipes, and other sources of ignition.
- Use only an approved fuel container.
- Do not remove the fuel cap or fill the fuel tank while the engine is running or hot.
- Do not add or drain the fuel in an enclosed space.
- Do not store the machine or fuel container where there is an open flame, spark, or pilot light, such as on a water heater or other appliance.
- If you spill fuel, do not attempt to start the engine; avoid creating any source of ignition until the fuel vapors have dissipated.

Preparing to Use the Machine

1. Clear any debris on top of and underneath the machine.
2. Engaged the parking brake.
3. Complete the following daily maintenance procedures:
   - Lubricating the Drive-Roller Bearing (page 23)
   - Checking the Engine-Oil Level (page 24)
   - Checking the Air-Filter Elements (page 26)
   - Checking the Safety-Interlock System (page 29)
   - Checking the Parking Brake (page 29)
   - Checking the Hydraulic Hoses and Fittings (page 30)
   - Checking the Hydraulic-Fluid Level (page 31)
   - Checking the Tire Air Pressure (page 33)
   - Checking the Machine for Loose Hardware (page 33)
4. Ensure that all guards and covers are in place and securely attached.
5. Lift the transport wheels clear of the ground and ensure that they lock in place.

Fuel Specification

- Use unleaded (87 pump octane minimum) gasoline.
- For best results, use only clean, fresh (less than 30 days old), unleaded gasoline with an octane rating of 87 or higher ((R+M)/2 rating method).
- Ethanol: Gasoline with up to 10% ethanol (gasohol) or 15% MTBE (methyl tertiary butyl ether) by volume is acceptable. Ethanol and MTBE are not the same. Gasoline with 15% ethanol (E15) by volume is not approved for use. Never use gasoline that contains more than 10% ethanol by volume, such as E15 (contains 15% ethanol), E20 (contains 20% ethanol), or E85 (contains 85% ethanol). Using unapproved gasoline may cause performance problems and/or engine damage, which may not be covered under warranty.
- Do not use methanol or gasoline containing methanol.
- Do not store fuel either in the fuel tank or fuel containers over the winter unless a fuel stabilizer is used
- Do not add oil to gasoline.

Filling the Fuel Tank

Fuel-Tank Capacity: 3.6 L (0.95 US gallons)

1. Clean around the fuel-tank cap and remove the cap from the tank (Figure 17).

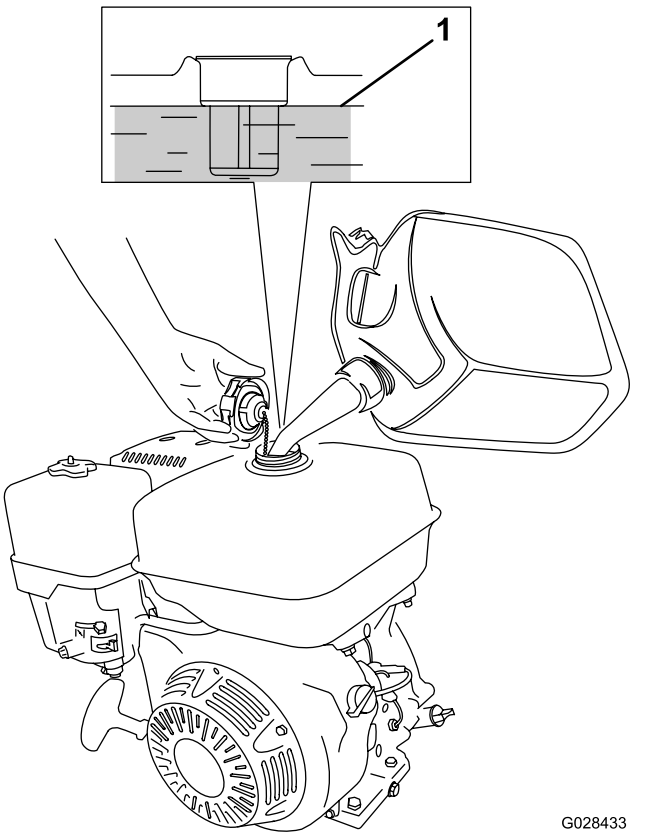

Figure 17

1. Maximum fuel level

2. Fill the fuel tank to approximately 25 mm (1 inch) below the top of the tank with the specified fuel.

   The air space below the top of the tank allows the fuel to expand.

   Important: **Do not overfill the fuel tank. Adding more that the specified level results in damage to the vapor recovery system, leading to engine performance failure. This is not a warrantable failure and requires fuel-tank cap replacement.**

3. Install the fuel-tank cap and wipe up any spilled fuel.

During Operation

Note: Determine the left and right sides of the machine from the normal operating position.

During Operation Safety

General Safety

- The owner/operator can prevent and is responsible for accidents that may cause personal injury or property damage.
- Wear appropriate clothing, including eye protection; long pants; substantial, slip-resistant footwear; and hearing protection. Tie back long hair and do not wear loose clothing or loose jewelry.
- Do not operate the machine while ill, tired, or under the influence of alcohol or drugs.
- Use your full attention while operating the machine. Do not engage in any activity that causes distractions; otherwise, injury or property damage may occur.
- Keep bystanders and pets out of the operating area.
- Never carry passengers on the machine.
- Operate the machine only in good visibility to avoid holes or hidden hazards.
- Avoid operating on wet grass. Reduced traction could cause the machine to slide.
- Before you start the engine, ensure that all drives are in neutral, the parking brake is engaged, and you are in the operating position.
- Look behind and down before backing up to be sure of a clear path.
- Use care when approaching blind corners, shrubs, trees, or other objects that may obscure your vision.
- Do not operate near drop-offs, ditches, or embankments. The machine could suddenly roll over if an edge gives way.
- Stop the machine, engage the parking brake, and shut off the engine inspect the attachment after striking an object or if there is an abnormal vibration in the machine. Make all necessary repairs before resuming operation.
- Slow down and use caution when making turns and crossing roads and sidewalks with the machine. Always yield the right-of-way.
- Never run an engine in an area where exhaust gasses are enclosed.
- Never leave a running machine unattended.
- Before leaving the operating position, do the following:

  - Park the machine on level ground.
  - Engage the parking brake.
  - Shut off the engine.
  - Wait for all moving parts to stop.
- Do not operate the machine when there is the risk of lightning.
- Do not use the machine as a towing vehicle.
- Use accessories, attachments, and replacement parts approved by The Toro® Company only.
- Keep hands and feet away from the rollers.
- Use care when connecting and disconnecting the machine to and from the tow vehicle.

Slope Safety

- Establish your own procedures and rules for operating on slopes. These procedures must include surveying the site to determine which slopes are safe for machine operation. Always use common sense and good judgment when performing this survey.
- Slopes are a major factor related to loss of control and rollover accidents, which can result in severe injury or death. You are responsible for safe slope operation. Operating the machine on any slope requires extra caution.
- Operate the machine at a lower speed when you are on a slope.
- If you feel uneasy operating the machine on a slope, do not do it.
- Watch for holes, ruts, bumps, rocks, or other hidden objects. Uneven terrain could overturn the machine. Tall grass can hide obstacles.
- Choose a low ground speed so that you do not need to stop or shift while on a slope.
- A rollover can occur if the rollers lose traction.
- Avoid operating the machine on wet grass. Rollers may lose traction, regardless of whether the brakes are available and functioning.
- Avoid starting, stopping, or turning the machine on a slope.
- Keep all movement on slopes slow and gradual. Do not suddenly change the speed or direction of the machine.

Starting the Engine

Note: Make sure that the spark-plug wire is connected to the spark plug.

1. Ensure that the lights switch is in the Off position.
2. Ensure that the parking brake is engaged and that the motion pedals are in the NEUTRAL position.
3. Turn the On/Off switch to the ON position.
4. Turn the fuel-shutoff valve to the OPEN position.
5. Move the choke lever to the ON position when starting a cold engine.

   Note: The choke may not be required when starting a warm engine.
6. Move the throttle control to the FAST position.
7. Stand at the rear of the machine, pull the recoil-start handle out until positive engagement results; then pull it vigorously to start the engine.

   Important: **Do not pull the recoil rope to the limit or let go of the starter handle when the rope is pulled out, because the rope may break or the recoil assembly may be damaged.**
8. When the engine has started, push the choke lever to the OFF position.
9. Move the throttle lever to the FAST position, for best roller performance.

Shutting Off the Engine

1. After operating the machine, return the motion pedals to the NEUTRAL position and engage the parking brake.
2. Set the engine speed to idle, and allow it to run for 10 to 20 seconds.
3. Turn the engine On/Off switch to the OFF position.
4. Turn the fuel-shutoff valve to the CLOSED position.
5. Set the lights switch to the OFF position.

Transporting the Machine

Preparing to Transport the Machine

1. Drive the machine to the transport vehicle.
2. Engage the parking brake.
3. Shut off the engine; refer to Shutting Off the Engine (page 16).
4. Ensure that the fuel-shutoff valve to the CLOSED position.

Raising the Machine onto the Transport Wheels

1. Push up on the hitch assembly until the latch lever is unlocked from the slide detent (Figure 18).

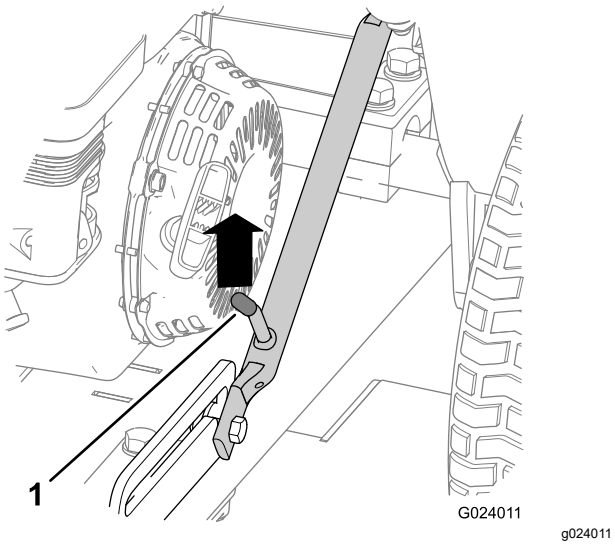

Figure 18

1. Latch lever

2. Lift the latch lever so that it slides freely, and pull the hitch down.

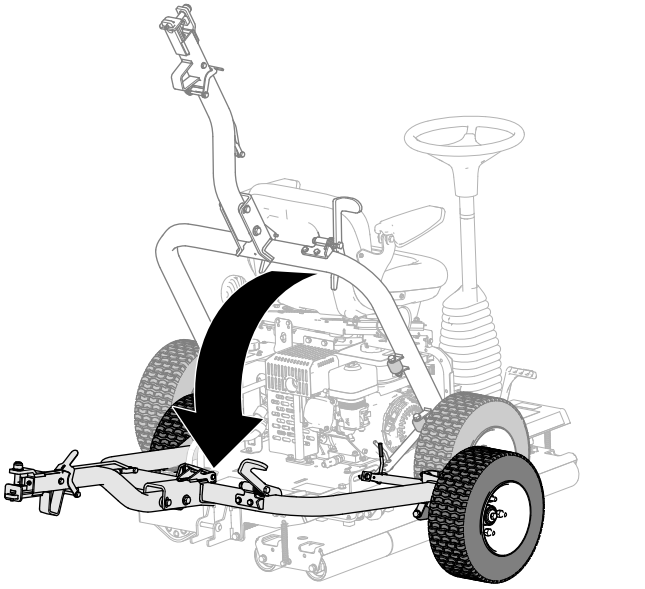

Figure 19

3. Step on the hitch pedal until the hitch locks into place (Figure 20).

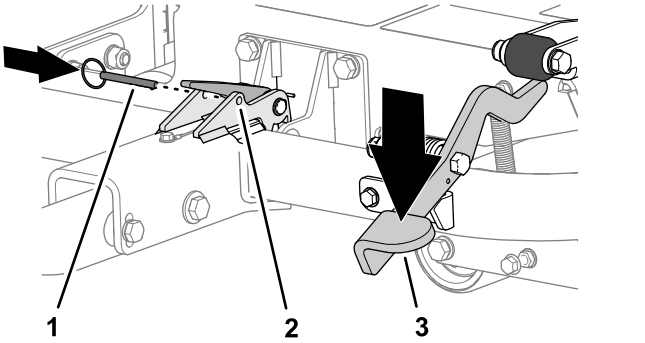

Figure 20

1. Locking pin
2. Latch
3. Hitch pedal

4. Insert the locking pin through the holes in the latch (Figure 20).
5. If the you are transporting the machine, connect it to the tow vehicle; refer to Connecting the Machine to the Tow Vehicle (page 17).

Connecting the Machine to the Tow Vehicle

Push down on the hitch-lock lever while inserting the hitch assembly onto the tow-vehicle hitch. Release the lever when the hitch and the hitch assembly are aligned (Figure 21).

Important: **Ensure that the lever returns to the Up position and that the hitch and the hitch assembly are engaged.**

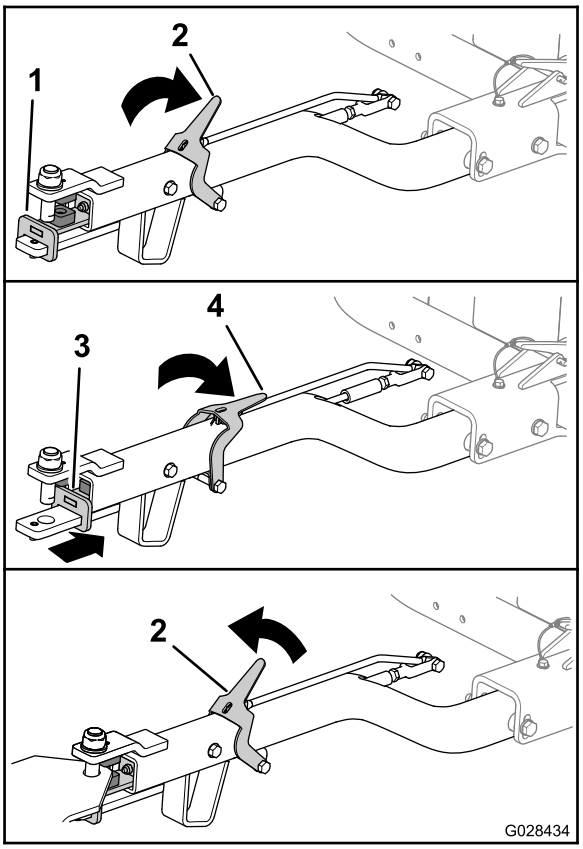

Figure 21

1. Hitch assembly (forward)
2. Hitch-lock lever (up)
3. Hitch assembly (backward)
4. Hitch-lock lever (down)

Disconnecting the Machine from the Tow Vehicle

Park the machine on level ground and chock the wheels.

Push down on the hitch-lock lever while removing the hitch assembly from the tow-vehicle hitch (Figure 21). Release the latch when the hitch and the hitch assembly are disengaged.

Lower the Machine onto the Rollers

1. If the machine is connected to a tow vehicle, disconnect the machine from the tow vehicle; refer to Disconnecting the Machine from the Tow Vehicle (page 18).
2. Remove the locking pin (Figure 22).

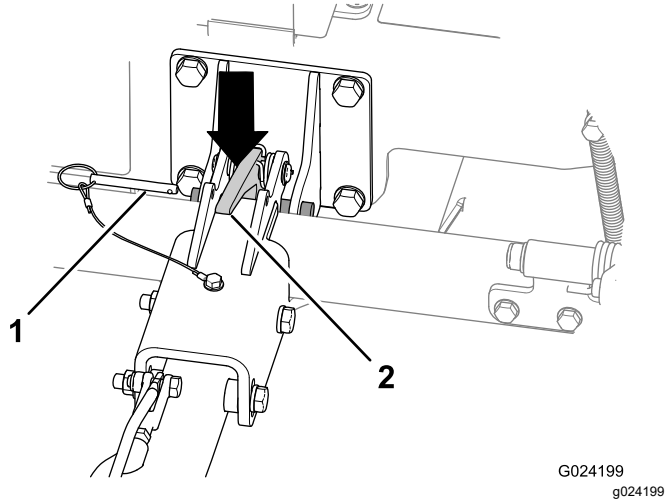

Figure 22

1. Locking pin
2. Hitch latch

3. Lift up on the hitch assembly to tip the machine up slightly.
4. Push down on the hitch latch to unlatch the hitch (Figure 22).
5. Raise the hitch (Figure 23) until the latch lever locks in the slide detent (Figure 18).

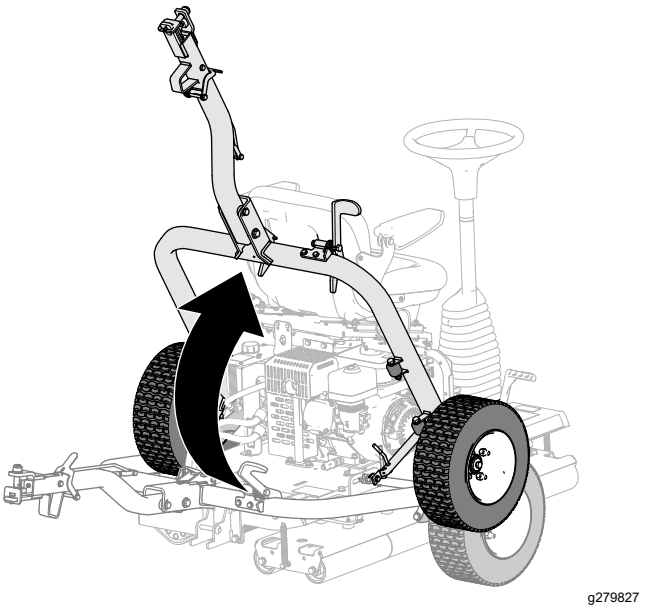

Figure 23

Operating the Machine

1. Ensure that the parking brake is engaged.
2. Sit on the operator seat, taking care not to contact the motion pedals as you sit down.
3. Adjust the seat and the steering wheel to a comfortable operating position.
4. Disengage the parking brake.
5. Hold onto the steering wheel, and slowly press either the left or right motion pedal with your corresponding foot, in whichever direction you wish to move.

   Note: The further you press the pedal, the faster you will travel in that direction.
6. To stop the machine, release the motion pedals.

   Important: **Do not press the motion pedals too quickly; this may cause the machines to skid and scuff the turf under the drive roller, as well as cause damage to the drive system. You should always operate the motion pedals in a controlled manner.**

   Note: As you become familiar with the machine, you will get the feel for when you should release the motion pedals, which will be prior to where you want to finish the run, as the machine continues to roll for a short time after you release the pedal. As you come to a complete stop, gently press the other motion pedal for your return pass.
7. Turn the steering wheel clockwise to turn the machine in the forward direction.

   Turn the steering wheel counterclockwise to turn the machine in the rearward direction.

   Note: As the direction changes at the end of every run, you will need to practice with the machine to become accustomed to the steering.

   Important: **To stop the machine in an emergency, press the other motion pedal to the NEUTRAL position. As an example, with the right pedal pressed and traveling to the right, press the left pedal to the NEUTRAL position to bring the machine to a stop. This action must be firm but not sudden, as it may cause the machine to tip sideways.**
8. Before leaving the operator's seat, parked on a level surface and engage the parking brake.

Operating Tips

- When operating the machine on hills, ensure that the drive roller is on the downhill side for adequate traction. Failure to do so may result in turf damage.
- For the best rolling effect, periodically remove any buildup that accumulates on the rollers.

After Operation

After Operation Safety

- Shut off the machine, remove the key (if equipped), and wait for all movement to stop before you leave the operator's position. Allow the machine to cool before adjusting, servicing, cleaning, or storing it.
- Clean grass and debris from the muffler and engine compartment to help prevent fires. Clean up oil or fuel spills.
- Allow the engine to cool before storing the machine in any enclosure.
- Shut off the fuel before storing or transporting the machine.
- Never store the machine or fuel container where there is an open flame, spark, or pilot light, such as on a water heater or on other appliances.
- Keep all parts of the machine in good working condition and all hardware tightened.
- Replace all worn, damaged, or missing decals.

Hauling the Machine

- Use full-width ramps for loading the machine onto a trailer or truck.
- Tie the machine down securely.

Maintenance

Note: Download a free copy of the electrical or hydraulic schematic by visiting www.Toro.com and searching for your machine from the Manuals link on the home page.

Maintenance Safety

- Before you leave the operator's position, do the following:
  - Park the machine on a level surface.
  - Move the throttle lever to the idle position.
  - Ensure that the motion pedals are in neutral position.
  - Engage the parking brake.
  - Shut off the engine.
  - Wait for all moving parts to stop.
  - Allow the machine to cool before adjusting, servicing, or cleaning.
- If possible, do not perform maintenance while the engine is running. Keep away from moving parts.
- Use jack stands to support the machine or components when required.
- Carefully release pressure from components with stored energy.

Recommended Maintenance Schedule(s)

Maintenance Service Interval	Maintenance Procedure
After the first 5 hours	• Check the machine for any loose hardware.
After the first 20 hours	• Change the engine oil. • Change the hydraulic fluid and filter.
Before each use or daily	• Lubricate the drive-roller bearing. • Check the engine-oil level. • Check the air cleaner. • Check the safety-interlock system. • Check the parking brake. • Check the hydraulic hoses and fittings. • Check the hydraulic-fluid level. • Check the tire air pressure in the transport wheels. • Check the machine for any loose hardware.
After each use	• Clean the machine.
Every 50 hours	• Clean the air cleaner (more often in dirty or dusty conditions).
Every 100 hours	• Change the engine oil. • Check/adjust the spark plug. • Clean the sediment cup.
Every 300 hours	• Replace the paper element. • Replace the spark plug. • Check and adjust the valve clearance.
Every 400 hours	• Change the hydraulic fluid and filter.

Important: **Refer to your engine owner's manual for additional maintenance procedures.**

Notation for Areas of Concern

Inspection performed by:		
Item	**Date**	**Information**
1		
2		
3		
4		
5		
6		
7		
8		

Daily Maintenance Checklist

Duplicate this page for routine use.

	For the week of:						
Maintenance Check Item	**Mon.**	**Tues.**	**Wed.**	**Thurs.**	**Fri.**	**Sat.**	**Sun.**
Check that the pivot joints operate freely.							
Check the fuel level.							
Check the level of the engine oil.							
Check the level of the hydraulic fluid.							
Check the air filter.							
Check the safety interlock system.							
Clean the engine cooling fins.							
Check unusual engine noises.							
Check the hoses for damage.							
Check for fluid leaks.							
Clean the machine.							
Lubricate all grease fittings.							
Check the tire air pressure.							
Touch up damaged paint.							

Pre-Maintenance Procedures

Do not tilt the machine unless it is necessary. If you tilt the machine, engine oil could enter the cylinder head of the engine, and hydraulic fluid could leak from the cap located on top of the tank. These leaks may result in expensive repairs to the machine. To perform service under the deck, lift the machine with a hoist or a small crane.

Preparing for Maintenance

1. Drive or transport the machine to a level surface; refer to Transporting the Machine (page 17).
2. If lowered, raise the transport wheels; refer to Raising the Machine onto the Transport Wheels (page 17).
3. If the engine is running, shut off the engine.
4. Engage the parking brake.
5. If the engine is hot, wait for the engine and hydraulic system to cool.

Raising the Operator's Seat

1. Pull back the seat latch until it clears the seat-latch pin (Figure 24).

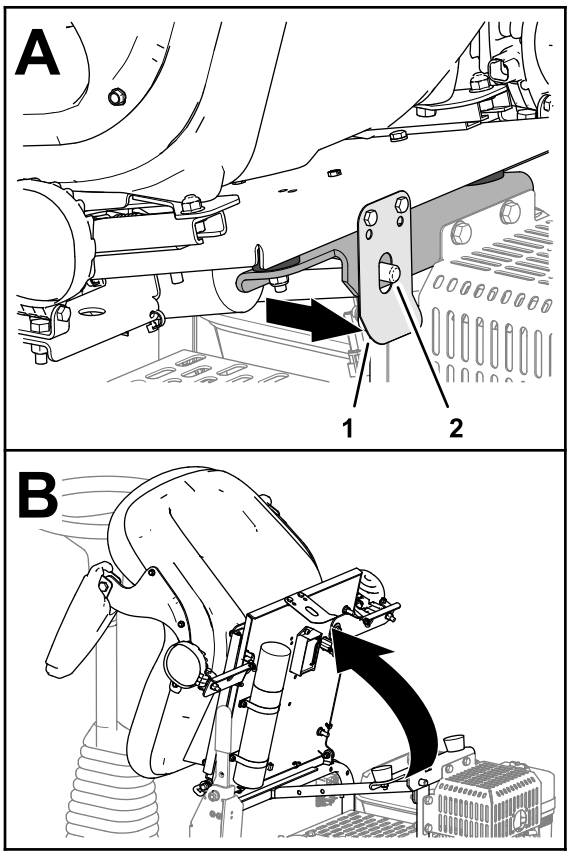

g279773

Figure 24

1. Seat latch
2. Seat-latch pin

2. Tilt the seat forward (Figure 24).

Lowering the Operator's Seat

Tilt the seat down until the seat latch snaps securely over the seat-latch pin (Figure 25).

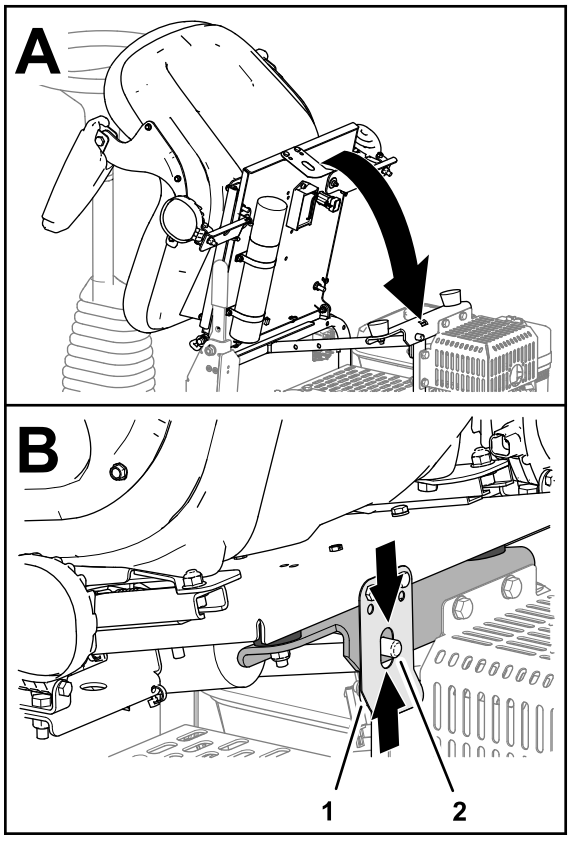

Figure 25

1. Seat latch
2. Seat-latch pin

Lubrication

Lubricating the Drive-Roller Bearing

Service Interval: Before each use or daily Lubricate the drive-roller bearing immediately after each washing.

Grease Type: No. 2 lithium grease

1. Prepare the machine for maintenance; refer to Preparing for Maintenance (page 22).
2. Wipe the area clean so that foreign matter cannot be forced into the bearing.
3. Pump grease into the grease fitting as shown in Figure 26.

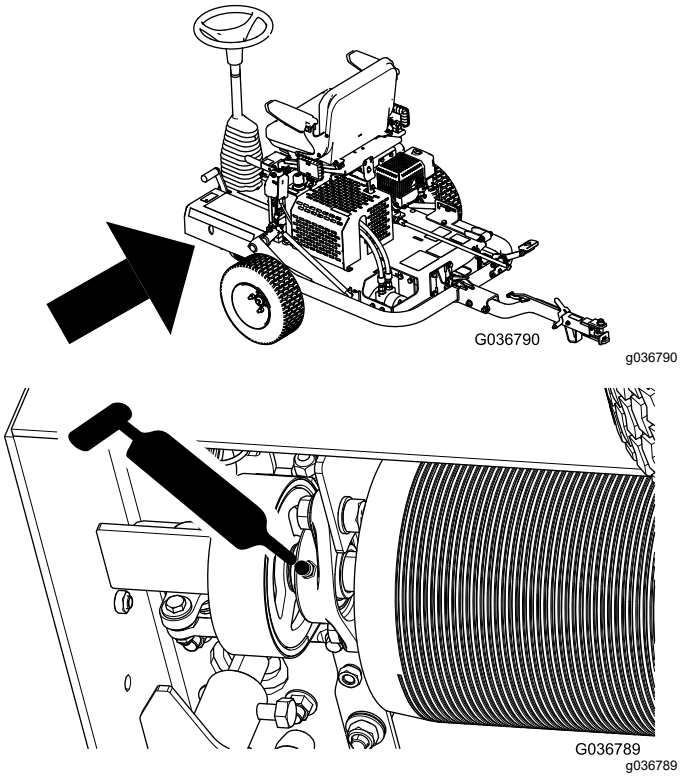

Figure 26

4. Wipe up any excess grease.

   Important: **After greasing, run the machine off the turf somewhere briefly to disperse any excess lubricant, to avoid damaging the turf.**

Engine Maintenance

Engine Safety

- Shut off the engine before checking the oil or adding oil to the crankcase.
- Do not change the governor speed or overspeed the engine.

Engine Oil Specification

Type: API service classification SL or higher

Viscosity: select the oil viscosity according to ambient temperature; refer to Figure 27.

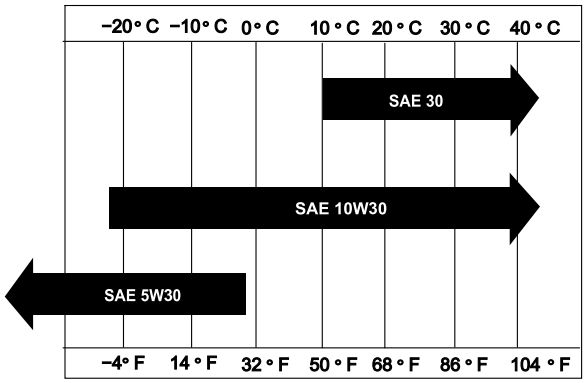

g018667

g018667

Figure 27

Checking the Engine-Oil Level

Service Interval: Before each use or daily

Note: The best time to check the engine oil is when the engine is cool before it has been started for the day. If it has already been run, allow the oil to drain back down to the sump for at least 10 minutes before checking it.

1. Prepare the machine for maintenance; refer to Preparing for Maintenance (page 22).
2. Clean the area around the oil-filler cap (Figure 28).

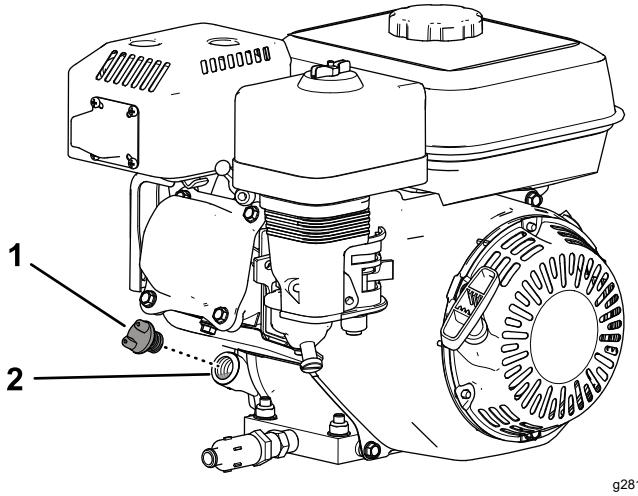

g281202

Figure 28

1. Oil-filler cap
2. Filler port

3. Remove the oil-filler cap by rotating it counterclockwise.
4. Check the oil level (Figure 29).

   The engine is full of oil when the oil level is at the bottom edge of the oil-fill port.

   Note: If the oil level is below the bottom edge of the oil-fill port, add enough of the specified oil to raise level to the bottom edge of the oil-fill port.

   Important: **Do not overfill the crankcase with engine oil.**

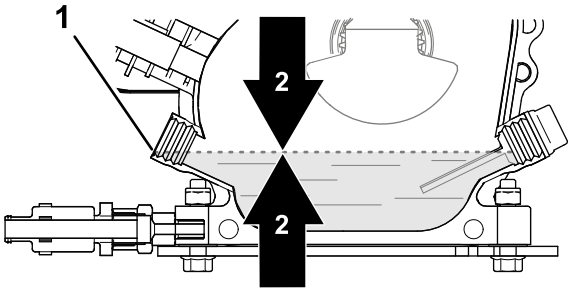

g281195

Figure 29

1. Oil-fill port (bottom edge)
2. Engine-oil level

5. Install the oil-filler cap and wipe up any spilled oil.

Changing the Engine Oil

Service Interval: After the first 20 hours—Change the engine oil.

Every 100 hours—Change the engine oil.

Preparing the Machine

1. Start the engine and run it for a few minutes to warm the engine oil; then shut off the engine.
2. Raise the machine onto the transport wheels; refer to Raising the Machine onto the Transport Wheels (page 17).
3. Tilt the machine so that the end of the machine with the engine is closer to the ground, and support the other end of the machine to hold it in this position.

Draining the Engine Oil

1. Install the drain hose onto the drain valve (Figure 30).
2. Place the other end of the hose (Figure 30) into a drain pan with a 1 L (1 US qt).

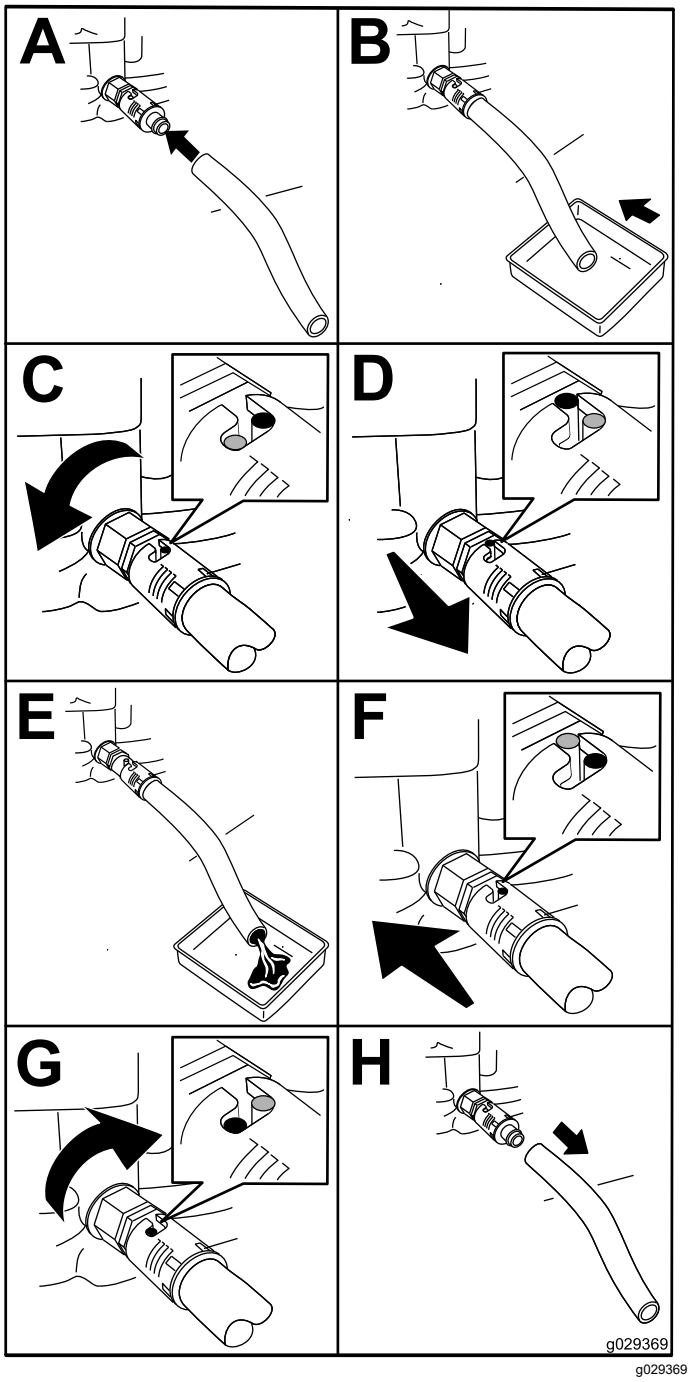

g029369

Figure 30

3. Turn the oil drain valve 1/4 turn counterclockwise and allow the engine oil to drain completely (Figure 30).
4. Turn the oil drain valve 1/4 turn clockwise to close the valve (Figure 30).
5. Remove the drain hose (Figure 30) and wipe any spilled oil.
6. Dispose of the waste oil properly.

   Note: Recycle it according to local codes.

Adding Oil to the Engine

Crankcase Capacity: 0.60 L (0.63 US qt)

1. Lower the machine onto the rollers; refer to Lower the Machine onto the Rollers (page 18).
2. Fill the crankcase with the specified oil; refer to Engine Oil Specification (page 24) and Checking the Engine-Oil Level (page 24).

Checking the Air-Filter Elements

Service Interval: Before each use or daily—Check the air cleaner.

1. Remove the wing nut securing the air-cleaner cover to the air cleaner, and remove the cover (Figure 31).

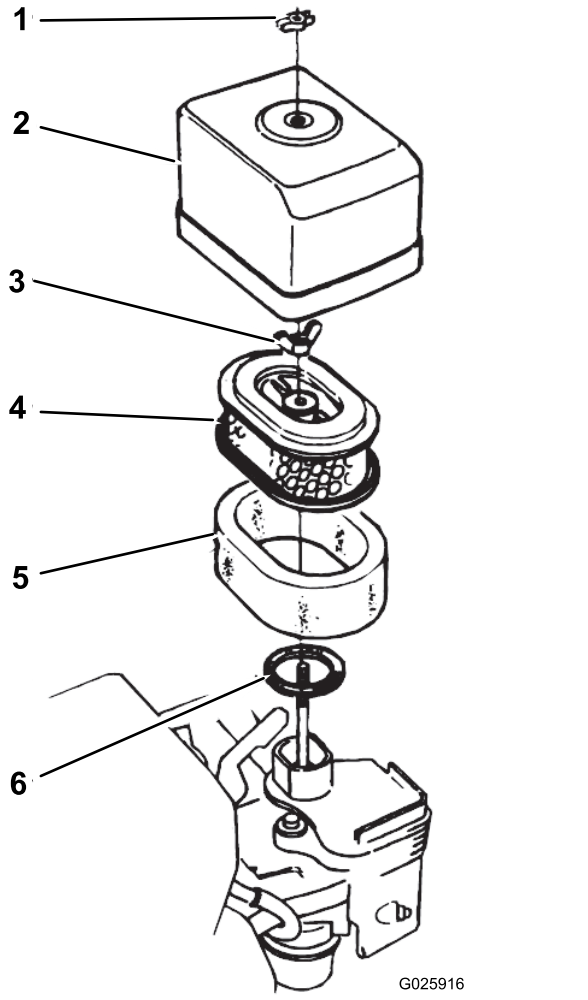

Figure 31

1. Wing nut
2. Air-cleaner cover
3. Wing nut
4. Paper element
5. Foam element
6. Gasket

2. Clean the air-cleaner cover thoroughly.
3. Check the foam air-filter element for dirt and debris.

   Clean the foam air-filter if needed; refer to Cleaning the Foam Air-Filter Element (page 27).
4. Assemble the air-cleaner cover to the air cleaner with the wing nut (Figure 31).

Servicing the Air Cleaner

Service Interval: Every 50 hours—Clean the air cleaner (more often in dirty or dusty conditions).

Every 300 hours—Replace the paper element.

Cleaning the Foam Air-Filter Element

1. Remove the wing nut securing the air-cleaner cover to the air cleaner, and remove the cover (Figure 31).
2. Remove the wing nut from the air filter, and remove the filter (Figure 31).
3. Remove the foam air-filter element from the paper element (Figure 31).

   If the paper air-filter element is dirty or damaged, clean it or replace it; refer to Cleaning the Paper Air-Filter Element (page 27).
4. Wash the foam air-filter element in a solution of liquid soap and warm water.
5. Squeeze the foam element to remove the dirt.

   Important: **Do not twist the element, because the foam may tear.**
6. Dry the foam element by wrapping it in a clean rag.
7. Squeeze the rag and foam element to dry the element.

   Important: **Do not twist it, because the foam may tear.**
8. Saturate the foam element with clean engine oil.
9. Squeeze the element to remove excess oil and to distribute the oil thoroughly.

   Note: The foam element should be damp with oil.

Cleaning the Paper Air-Filter Element

Clean the paper element by tapping the filter element several times on a hard surface to remove the dirt.

Important: **Never brush dirt off the element or use compressed air to remove dirt; brushing forces dirt into the fibers, and compressed air will damage the paper filter.**

Assembling the Air Filter Elements

1. Assemble the foam air-filter element onto the paper element (Figure 31).
2. Inspect the gasket for wear and damage (Figure 31).

   Replace the gasket if it is worn or damaged.
3. Ensure that the gasket is positioned on the air inlet for the carburetor (Figure 31).
4. Assemble the air-filter elements to carburetor with the wing nut (Figure 31).
5. Assemble the air-cleaner cover to carburetor with the other wing nut (Figure 31).

Servicing the Spark Plug

Service Interval: Every 100 hours—Check/adjust the spark plug.

Every 300 hours—Replace the spark plug.

Type: NGK BPR6ES spark plug or equivalent

Air Gap: 0.70 to 0.80 mm (0.028 to 0.031 inch); refer to Figure 33

1. Prepare the machine for maintenance; refer to Preparing for Maintenance (page 22).
2. Disconnect the spark-plug wire from the spark plug (Figure 32).

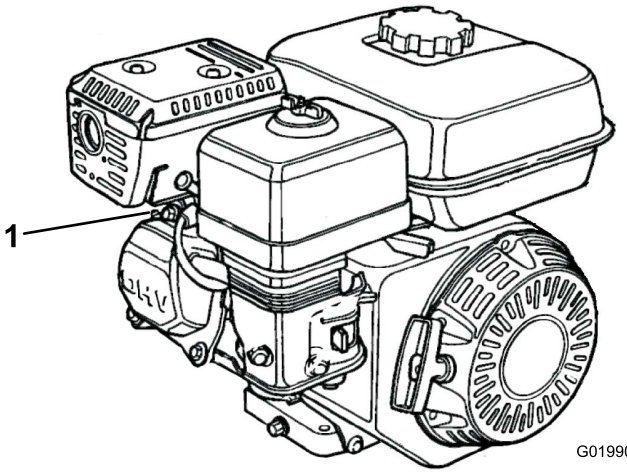

g019905

Figure 32

1. Spark-plug wire

3. Clean around the spark plug, and remove the plug from the cylinder head.

   Important: **Replace a cracked, fouled, or dirty spark plug. Do not sand blast, scrape, or clean the electrodes, because engine damage could result from grit entering the cylinder.**
4. Set the air gap to 0.70 to 0.80 mm (0.028 to 0.031 inch) as shown in Figure 33).

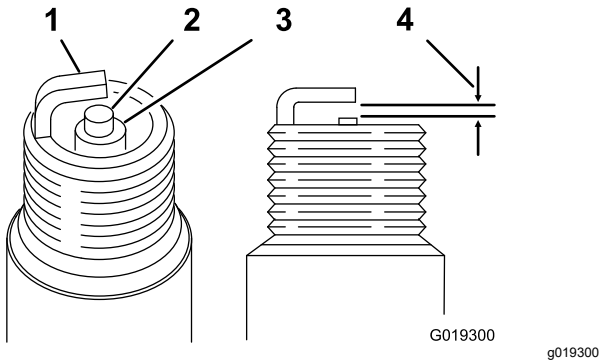

Figure 33

1. Side electrode
2. Center electrode
3. Insulator
4. 0.70 to 0.80 mm (0.028 to 0.031 inch)

5. Install the correctly gapped spark plug carefully by hand to avoid cross-threading.
6. After the spark plug is seated, tighten it with a spark-plug wrench as follows:
   - When installing a new spark plug, tighten it 1/2 turn after the spark plug seats, to compress the gasket.
   - When installing the original spark plug, tighten it 1/8 to 1/4 turn after the spark plug seats, to compress the gasket.

   Important: **A loose spark plug can overheat and damage the engine. Overtightening the spark plug can damage the threads in the cylinder head.**
7. Connect the spark-plug wire to the spark plug.

Checking and Adjusting the Valve Clearance

Service Interval: Every 300 hours

Important: **Refer to your authorized Toro distributor for service.**

Fuel System Maintenance

Cleaning the Sediment Cup

Service Interval: Every 100 hours—Clean the sediment cup.

1. Prepare the machine for maintenance; refer to Preparing for Maintenance (page 22).
2. Move the fuel-shutoff valve to the OFF position (Figure 34).

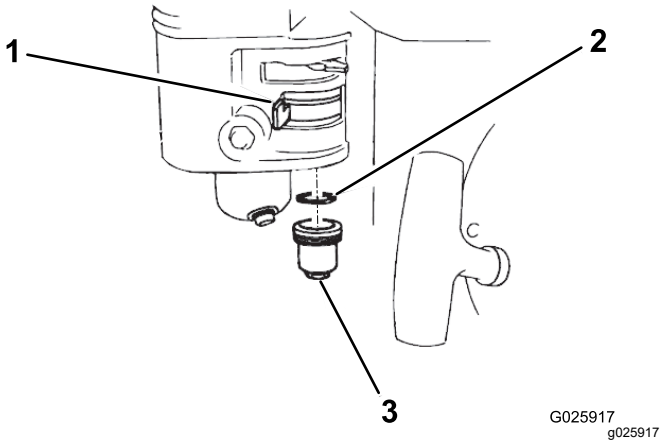

Figure 34

1. Fuel-shutoff valve
2. O-ring
3. Sediment cup

3. Remove the fuel sediment cup and O-ring (Figure 34).
4. Check the O-ring for wear and damage; replace the O-ring if it is worn or damaged.
5. Wash the sediment cup and O-ring in nonflammable solvent, and dry them thoroughly.
6. Place the O-ring in the fuel-shutoff valve and install the sediment cup (Figure 34). Tighten the sediment cup securely.

Electrical System Maintenance

Checking the Safety-Interlock System

⚠ CAUTION

If the safety-interlock switches are disconnected or damaged, the machine could operate unexpectedly, causing personal injury.

- **Do not tamper with the interlock switches.**
- **Check the operation of the interlock switches daily, and replace any damaged switches before operating the machine.**

Important: **If the safety-interlock system does not operate as described below, have an authorized Toro distributor repair it immediately.**

1. If on the transport wheels, lower the machine onto the rollers; refer to Lower the Machine onto the Rollers (page 18).
2. Engage the parking brake, ensure that the motion pedals are in the NEUTRAL position, and start the engine.
3. Sit on the seat.
4. With the parking brake engaged, gently press a motion pedal down; the engine should shut off after approximately 1 second.
5. With the engine running and the brake disengaged, stand up and verify that the engine shuts off after 1 second.

Note: The safety-interlock system is also designed to shut off the engine if the operator rises off the seat while the machine is moving.

Brake Maintenance

Checking the Parking Brake

Service Interval: Before each use or daily

1. Drive or transport the machine to a level surface.
2. If you transport the machine, disconnect it from the tow vehicle and lower the machine onto the rollers; refer to Disconnecting the Machine from the Tow Vehicle (page 18) and Lower the Machine onto the Rollers (page 18).
3. Engage the parking brake.
4. Start the engine and set the engine speed to IDLE.
5. Sit on the operator's seat.
6. Press one of the motion pedals.

   Important: **The machine should not move. If it moves, adjust the parking brake; refer to Adjusting the Parking Brake (page 29).**

   Note: The engine shuts off in 1 second when you press the motion pedal with the parking brake engaged.

Adjusting the Parking Brake

1. Ensure that the engine is shut off.
2. Release the parking brake.
3. Adjust the parking brake as follows:
   - To increase the brake force, rotate the brake locknut clockwise (Figure 35).
   - To decrease the brake force, rotate the brake locknut counterclockwise (Figure 35).

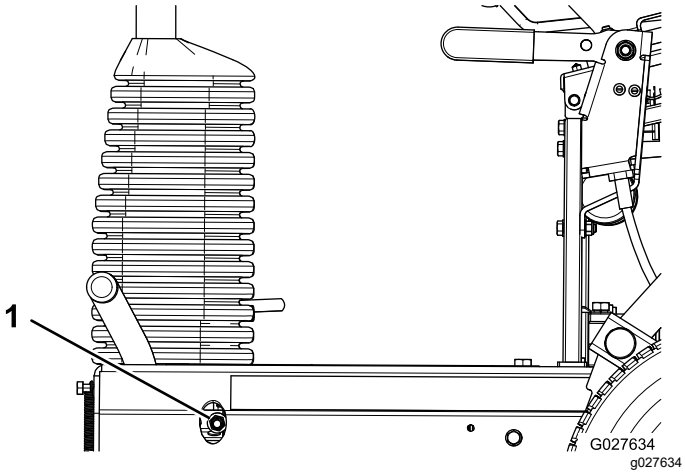

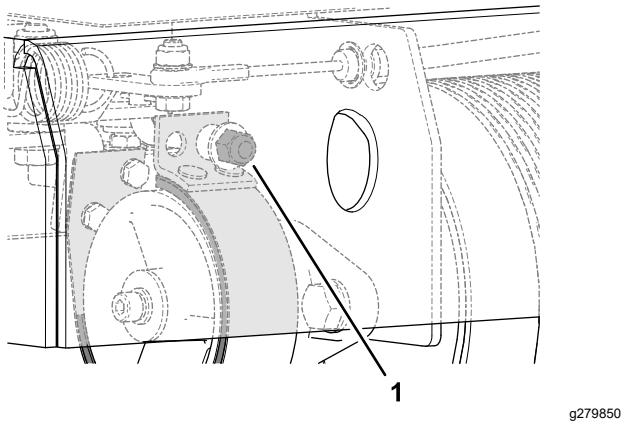

Figure 35

1. Brake locknut

4. Check the parking brake; refer to Checking the Parking Brake (page 29).
5. Start the engine and set the engine speed to IDLE.
6. Sit in the operator's seat.
7. Release the parking brake.
8. Press one of the motion pedals.

   The machine should move. If the machine does not move with the parking brake released, repeat steps 3 through 8 until the machine does not move when the barking brake is engaged and the machine moves when the parking brake is released.
9. Engage the parking brake and shut off the engine.

Hydraulic System Maintenance

Hydraulic System Safety

- Seek immediate medical attention if fluid is injected into skin. Injected fluid must be surgically removed within a few hours by a doctor.
- Ensure that all hydraulic-fluid hoses and lines are in good condition and all hydraulic connections and fittings are tight before applying pressure to the hydraulic system.
- Keep your body and hands away from pinhole leaks or nozzles that eject high-pressure hydraulic fluid.
- Use cardboard or paper to find hydraulic leaks.
- Safely relieve all pressure in the hydraulic system before performing any work on the hydraulic system.

Checking the Hydraulic Hoses and Fittings

Service Interval: Before each use or daily

Check the hydraulic system for leaks, loose mounting supports, wear, loose fittings, weather deterioration, and chemical deterioration. Make all necessary repairs before operating the machine.

⚠ WARNING

Hydraulic fluid escaping under pressure can penetrate skin and cause injury.

- **Seek immediate medical attention if fluid is injected into skin.**
- **Make sure that all hydraulic fluid hoses and lines are in good condition and all hydraulic connections and fittings are tight before applying pressure to the hydraulic system.**
- **Keep your body and hands away from pinhole leaks or nozzles that eject high-pressure hydraulic fluid.**
- **Use cardboard or paper to find hydraulic leaks.**
- **Safely relieve all pressure in the hydraulic system before performing any work on the hydraulic system.**

Checking the Hydraulic-Fluid Level

Service Interval: Before each use or daily Check the level of the hydraulic fluid before the engine is first started and daily thereafter.

Note: Before working on any part of the hydraulic drive system, shut off the engine to depressurize the system. Before starting the engine after hydraulic system maintenance, and pressurizing the hydraulic lines, check all hoses and connectors for damage and to ensure that they are tight. Replace any damaged hoses and tighten any loose couplings as required.

1. Prepare the machine for maintenance; refer to Preparing for Maintenance (page 22).
2. Raise the operator's seat; refer to Raising the Operator's Seat (page 22).
3. Remove the cap and check hydraulic-fluid level in the reservoir (Figure 36).

   The hydraulic-fluid level should cover the word COLD that is embossed into the baffle of the reservoir.

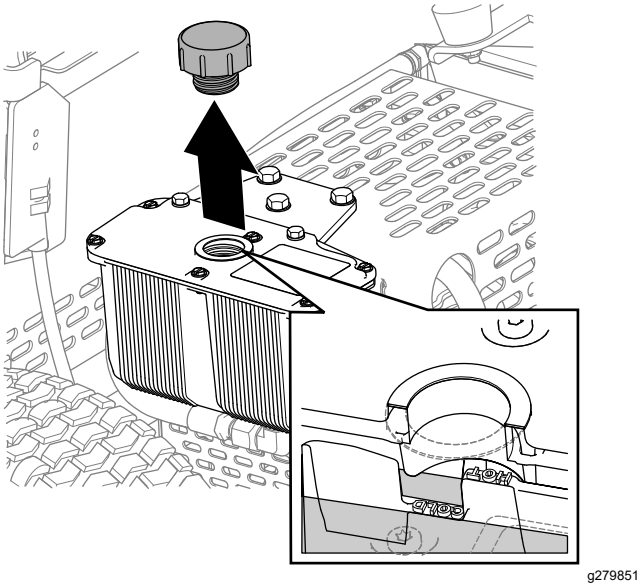

g279851

Figure 36

4. If necessary, add the specified hydraulic fluid to the reservoir until the fluid covers the cold-fluid level on the baffle.

   Note: The baffle in the reservoir is labeled HOT and COLD. Fill the reservoir to the appropriate level depending upon the temperature of the fluid. The fluid level varies with the temperature of the fluid. The cold level shows the level of the fluid when it is at 24°C (75°F). The hot level shows the level of fluid when it is at 107°C (225°F).

   For example: If the fluid is at ambient-air temperature, about 24°C (75° F), fill only to the cold level. If the fluid is about 65°C (150° F), fill to halfway between the hot and cold levels.
5. Replace the hydraulic reservoir cap and tighten it until it is snug.

   Important: **Do not overtighten the reservoir cap.**
6. Wipe up any spilled fluid.
7. Lower the operator's seat; refer to Lowering the Operator's Seat (page 23).

Hydraulic Fluid Specifications

The reservoir is filled at the factory with high-quality hydraulic fluid. Check the level of the hydraulic fluid before you first start the engine and daily thereafter; refer to Checking the Hydraulic-Fluid Level (page 31).

Recommended replacement fluid: Toro PX Extended Life Hydraulic Fluid; available in 19 L (5 US gallon) pails or 208 L (55 US gallon) drums.

Note: A machine using the recommended replacement fluid requires less frequent fluid and filter changes.

Alternative fluids: If Toro PX Extended Life Hydraulic Fluid is not available, you may use another conventional, petroleum-based hydraulic fluid having specifications that fall within the listed range for all the following material properties and that it meets industry standards. Do not use synthetic fluid. Consult with your lubricant distributor to identify a satisfactory product.

Note: Toro does not assume responsibility for damage caused by improper substitutions, so use products only from reputable manufacturers who will stand behind their recommendation.

High Viscosity Index/Low Pour Point Anti-wear Hydraulic Fluid, ISO VG 46

Material Properties:

Viscosity, ASTM D445	cSt @ 40°C (104°F) 44 to 48
Viscosity Index ASTM D2270	140 or higher
Pour Point, ASTM D97	-37°C to -45°C (-34°F to -49°F)
Industry Specifications:	Eaton Vickers 694 (I-286-S, M-2950-S/35VQ25 or M-2952-S)

Note: Many hydraulic fluids are almost colorless, making it difficult to spot leaks. A red dye additive for

the hydraulic fluid is available in 20 ml (0.67 fl oz) bottles. A bottle is sufficient for 15 to 22 L (4 to 6 US gallons) of hydraulic fluid. Order Part No. 44-2500 from your authorized Toro distributor.

Changing the Hydraulic Fluid and Filter

Service Interval: After the first 20 hours—Change the hydraulic fluid and filter.

Every 400 hours—Change the hydraulic fluid and filter.

Important: **Use only the specified hydraulic fluid. Other fluids could cause system damage.**

Preparing to Change the Hydraulic Fluid and Filter

1. Drive or transport the machine to a level surface; refer to Transporting the Machine (page 17).
2. If you run the engine, shut off the engine.
3. Engage the parking brake.
4. If the machine is on the rollers, raise it onto the transport wheels; refer to Raising the Machine onto the Transport Wheels (page 17).
5. Raise the operator's seat; refer to Raising the Operator's Seat (page 22).
6. If you run the engine, wait for the engine and hydraulic system to cool.

Draining the Hydraulic Fluid

1. Align a drain pan with a 2 L (2 US qt) capacity under the hydraulic reservoir (Figure 37).

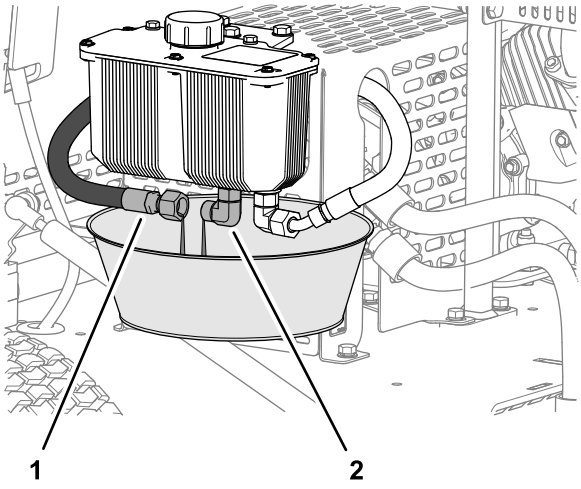

Figure 37

1. Hydraulic-supply hose
2. Hydraulic fitting (reservoir)

2. Remove the hydraulic-supply hose from the fitting of the reservoir, and allow the hydraulic fluid to drain completely (Figure 37).
3. Install the hydraulic hose that you removed in step 2.
4. Wipe up any spilled hydraulic fluid.
5. Dispose of the waste hydraulic fluid according to local codes.

Changing the Filter

1. Clean the area around the filter head and hydraulic filter.
2. Pack rags under the hydraulic filter (Figure 38).

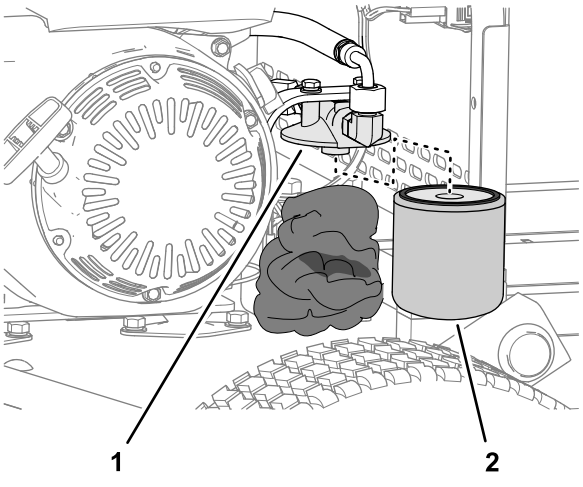

Figure 38

1. Filter head
2. Hydraulic filter

3. Carefully remove the hydraulic filter (Figure 38).
4. Fill the replacement filter with the specified hydraulic fluid and lubricate the sealing gasket with hydraulic fluid.
5. Install the filter onto the filter head by hand (Figure 38) until the gasket contacts the filter head, then tighten the filter 3/4 turn further.
6. Wipe up any spilled hydraulic fluid.
7. Dispose of the old filter according to local codes.

Filling the Hydraulic Reservoir

1. Lower the machine onto the rollers; refer to Lower the Machine onto the Rollers (page 18).
2. Remove the hydraulic-reservoir cap (Figure 39).

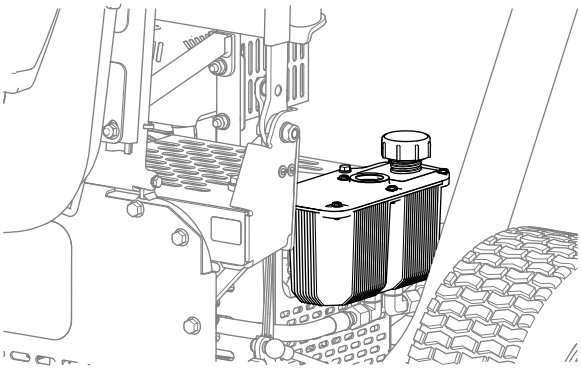

g279900

Figure 39

3. Fill the reservoir with the specified hydraulic fluid; refer to Hydraulic Fluid Specifications (page 31) and Checking the Hydraulic-Fluid Level (page 31).
4. Install the reservoir cap (Figure 39).
5. Wipe up any spilled hydraulic fluid.
6. Start the engine and run it at low idle for 3 to 5 minutes.

   Running the engine circulates the hydraulic fluid and removes air trapped in the hydraulic system.
7. Check the machine for hydraulic leaks at the reservoir, hydraulic hoses, and the hydraulic filter.

   Repair all hydraulic leaks.
8. Shut off the engine, check the hydraulic-fluid level, and add fluid if necessary.
9. Lower the operator's seat; refer to Lowering the Operator's Seat (page 23).

Chassis Maintenance

Checking the Tire Air Pressure

1. Measure the air pressure in the tires of the transport wheels.

   You should measure 103 kPa (15 psi).
2. If the tire air pressure is higher than or lower than 103 kPa (15 psi), add air to or remove air from the tires until you measure 103 kPa (15 psi).

Checking the Machine for Loose Hardware

Service Interval: After the first 5 hours

Before each use or daily

Check the chassis for any loose or missing nuts and bolts.

Tighten loose nuts and bolts and replace missing hardware as required.

Cleaning

Cleaning the Machine

Service Interval: After each use

Important: **Do not use brackish or reclaimed water to clean the machine.**

1. Clean the machine with fresh water.

   Note: Do not use a pressure washer to clean the machine.

2. Clean dirt and debris from the rollers as needed by spraying water through the holes in the roller housings (Figure 40).

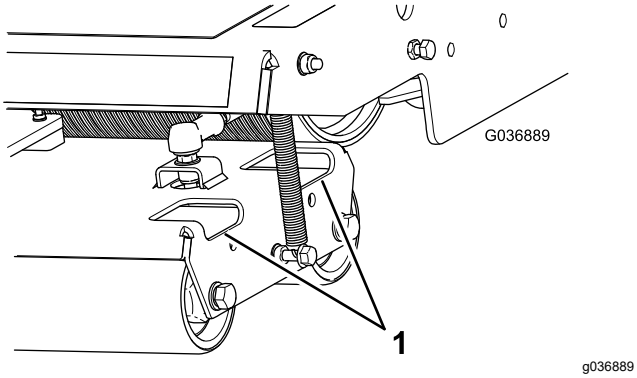

Figure 40

1. Access holes

3. Clean dirt and debris from the area around the hydraulic motor (Figure 41).

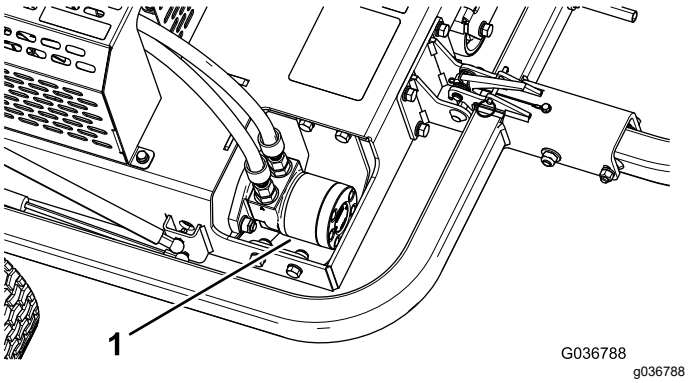

Figure 41

1. Hydraulic motor

4. Clean dirt and debris from the engine and the engine-cooling fins (Figure 42).

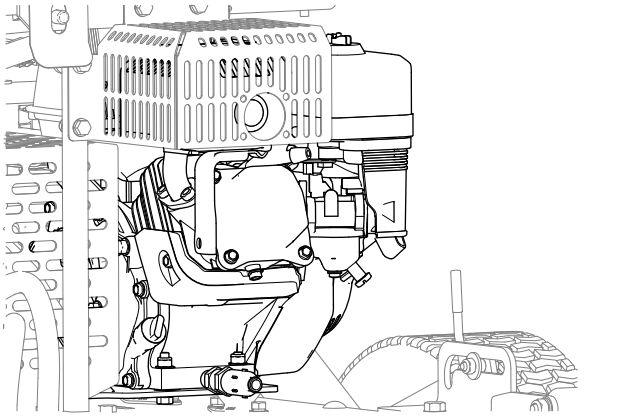

Figure 42

Storage

Preparing the Machine for Short-Term Storage

Less than 90 Days

1. Shut off the machine and wait for all movement to stop before you leave the operator's position. Allow the machine to cool before adjusting, servicing, cleaning, or storing it.
2. Remove grass clippings, dirt, and grime from the external parts of the entire machine, especially the rollers and the engine. Clean dirt and chaff from the outside of the cylinder-head fins and the blower housing on the engine.

   Important: **You can wash the machine with mild detergent and water. Do not pressure wash the machine. Avoid excessive use of water, especially near the engine.**
3. Check and tighten all bolts, nuts, and screws. Repair or replace any part that is worn or damaged.
4. Paint all scratched or bare metal surfaces. Paint is available from your authorized Toro distributor.

Preparing the Machine for Long-Term Storage

More than 90 Days

1. Perform all the steps in Preparing the Machine for Short-Term Storage (page 35).
2. Prepare fuel with stabilizer/conditioner according to the manufacturer's instructions.
3. Add the fuel with stabilizer/conditioner to the fuel tank.
4. Run the engine to distribute the conditioned fuel through the fuel system for 5 minutes.
5. Either shut off the engine, allow it to cool, and drain the fuel tank, or operate the engine until it shuts off.
6. Start the engine and run it until it shuts off. Repeat the procedure with the choke on until the engine does not start again.
7. Dispose of fuel properly. Recycle it according to local codes.

Storing the Machine

Store the machine in a clean, dry garage or storage area. Cover the machine to protect it and keep it clean.

Notes:

Notes:

California Proposition 65 Warning Information

What is this warning?

You may see a product for sale that has a warning label like the following:



WARNING: Cancer and Reproductive Harm—www.p65Warnings.ca.gov.

What is Prop 65?

Prop 65 applies to any company operating in California, selling products in California, or manufacturing products that may be sold in or brought into California. It mandates that the Governor of California maintain and publish a list of chemicals known to cause cancer, birth defects, and/or other reproductive harm. The list, which is updated annually, includes hundreds of chemicals found in many everyday items. The purpose of Prop 65 is to inform the public about exposure to these chemicals.

Prop 65 does not ban the sale of products containing these chemicals but instead requires warnings on any product, product packaging, or literature with the product. Moreover, a Prop 65 warning does not mean that a product is in violation of any product safety standards or requirements. In fact, the California government has clarified that a Prop 65 warning "is not the same as a regulatory decision that a product is 'safe' or 'unsafe.'" Many of these chemicals have been used in everyday products for years without documented harm. For more information, go to https://oag.ca.gov/prop65/faqs-view-all.

A Prop 65 warning means that a company has either (1) evaluated the exposure and has concluded that it exceeds the "no significant risk level"; or (2) has chosen to provide a warning based on its understanding about the presence of a listed chemical without attempting to evaluate the exposure.

Does this law apply everywhere?

Prop 65 warnings are required under California law only. These warnings are seen throughout California in a wide range of settings, including but not limited to restaurants, grocery stores, hotels, schools, and hospitals, and on a wide variety of products. Additionally, some online and mail order retailers provide Prop 65 warnings on their websites or in catalogs.

How do the California warnings compare to federal limits?

Prop 65 standards are often more stringent than federal and international standards. There are various substances that require a Prop 65 warning at levels that are far lower than federal action limits. For example, the Prop 65 standard for warnings for lead is 0.5 µg/day, which is well below the federal and international standards.

Why don't all similar products carry the warning?

- Products sold in California require Prop 65 labelling while similar products sold elsewhere do not.
- A company involved in a Prop 65 lawsuit reaching a settlement may be required to use Prop 65 warnings for its products, but other companies making similar products may have no such requirement.
- The enforcement of Prop 65 is inconsistent.
- Companies may elect not to provide warnings because they conclude that they are not required to do so under Prop 65; a lack of warnings for a product does not mean that the product is free of listed chemicals at similar levels.

Why does Toro include this warning?

Toro has chosen to provide consumers with as much information as possible so that they can make informed decisions about the products they buy and use. Toro provides warnings in certain cases based on its knowledge of the presence of one or more listed chemicals without evaluating the level of exposure, as not all the listed chemicals provide exposure limit requirements. While the exposure from Toro products may be negligible or well within the "no significant risk" range, out of an abundance of caution, Toro has elected to provide the Prop 65 warnings. Moreover, if Toro does not provide these warnings, it could be sued by the State of California or by private parties seeking to enforce Prop 65 and subject to substantial penalties.

The Toro Warranty

Two-Year or 1,500 Hours Limited Warranty

Conditions and Products Covered

The Toro Company and its affiliate, Toro Warranty Company, pursuant to an agreement between them, jointly warrant your Toro Commercial product ("Product") to be free from defects in materials or workmanship for 2 years or 1,500 operational hours*, whichever occurs first. This warranty is applicable to all products with the exception of Aerators (refer to separate warranty statements for these products). Where a warrantable condition exists, we will repair the Product at no cost to you including diagnostics, labor, parts, and transportation. This warranty begins on the date the Product is delivered to the original retail purchaser.
* Product equipped with an hour meter.

Instructions for Obtaining Warranty Service

You are responsible for notifying the Commercial Products Distributor or Authorized Commercial Products Dealer from whom you purchased the Product as soon as you believe a warrantable condition exists. If you need help locating a Commercial Products Distributor or Authorized Dealer, or if you have questions regarding your warranty rights or responsibilities, you may contact us at:

Toro Commercial Products Service Department
Toro Warranty Company
8111 Lyndale Avenue South
Bloomington, MN 55420-1196

952–888–8801 or 800–952–2740
E-mail: commercial.warranty@toro.com

Owner Responsibilities

As the product owner, you are responsible for required maintenance and adjustments stated in your *Operator's Manual*. Repairs for product issues caused by failure to perform required maintenance and adjustments are not covered under this warranty.

Items and Conditions Not Covered

Not all product failures or malfunctions that occur during the warranty period are defects in materials or workmanship. This warranty does not cover the following:

- Product failures which result from the use of non-Toro replacement parts, or from installation and use of add-on, or modified non-Toro branded accessories and products.
- Product failures which result from failure to perform recommended maintenance and/or adjustments.
- Product failures which result from operating the Product in an abusive, negligent, or reckless manner.
- Parts consumed through use that are not defective. Examples of parts which are consumed, or used up, during normal Product operation include, but are not limited to, brake pads and linings, clutch linings, blades, reels, rollers and bearings (sealed or greasable), bed knives, spark plugs, castor wheels and bearings, tires, filters, belts, and certain sprayer components such as diaphragms, nozzles, flow meters, and check valves.
- Failures caused by outside influence, including, but not limited to, weather, storage practices, contamination, use of unapproved fuels, coolants, lubricants, additives, fertilizers, water, or chemicals.
- Failure or performance issues due to the use of fuels (e.g. gasoline, diesel, or biodiesel) that do not conform to their respective industry standards.
- Normal noise, vibration, wear and tear, and deterioration. Normal "wear and tear" includes, but is not limited to, damage to seats due to wear or abrasion, worn painted surfaces, scratched decals or windows.

Parts

Parts scheduled for replacement as required maintenance are warranted for the period of time up to the scheduled replacement time for that part. Parts replaced under this warranty are covered for the duration of the original product warranty and become the property of Toro. Toro will make the final decision whether to repair any existing part or assembly or replace it. Toro may use remanufactured parts for warranty repairs.

Deep Cycle and Lithium-Ion Battery Warranty

Deep cycle and Lithium-Ion batteries have a specified total number of kilowatt-hours they can deliver during their lifetime. Operating, recharging, and maintenance techniques can extend or reduce total battery life. As the batteries in this product are consumed, the amount of useful work between charging intervals will slowly decrease until the battery is completely worn out. Replacement of worn out batteries, due to normal consumption, is the responsibility of the product owner.
Note: (Lithium-Ion battery only): Refer to the battery warranty for additional information.

Lifetime Crankshaft Warranty (ProStripe 02657 Model Only)

The Prostripe which is fitted with a genuine Toro Friction Disc and Crank-Safe Blade Brake Clutch (integrated Blade Brake Clutch (BBC) + Friction Disc assembly) as original equipment and used by the original purchaser in accordance with recommended operating and maintenance procedures, are covered by a Lifetime Warranty against engine crankshaft bending. Machines fitted with friction washers, Blade Brake Clutch (BBC) units and other such devices are not covered by the Lifetime Crankshaft Warranty.

Maintenance is at Owner's Expense

Engine tune-up, lubrication, cleaning and polishing, replacement of filters, coolant, and completing recommended maintenance are some of the normal services Toro products require that are at the owner's expense.

General Conditions

Repair by an Authorized Toro Distributor or Dealer is your sole remedy under this warranty.

Neither The Toro Company nor Toro Warranty Company is liable for indirect, incidental or consequential damages in connection with the use of the Toro Products covered by this warranty, including any cost or expense of providing substitute equipment or service during reasonable periods of malfunction or non-use pending completion of repairs under this warranty. Except for the Emissions warranty referenced below, if applicable, there is no other express warranty. All implied warranties of merchantability and fitness for use are limited to the duration of this express warranty.

Some states do not allow exclusions of incidental or consequential damages, or limitations on how long an implied warranty lasts, so the above exclusions and limitations may not apply to you. This warranty gives you specific legal rights, and you may also have other rights which vary from state to state.

Note Regarding Emissions Warranty

The Emissions Control System on your Product may be covered by a separate warranty meeting requirements established by the U.S. Environmental Protection Agency (EPA) and/or the California Air Resources Board (CARB). The hour limitations set forth above do not apply to the Emissions Control System Warranty. Refer to the Engine Emission Control Warranty Statement supplied with your product or contained in the engine manufacturer's documentation.

Countries Other than the United States or Canada

Customers who have purchased Toro products exported from the United States or Canada should contact their Toro Distributor (Dealer) to obtain guarantee policies for your country, province, or state. If for any reason you are dissatisfied with your Distributor's service or have difficulty obtaining guarantee information, contact your Authorized Toro Service Center.



Count on it.