Our Place®

Large Wonder Oven® User Manual

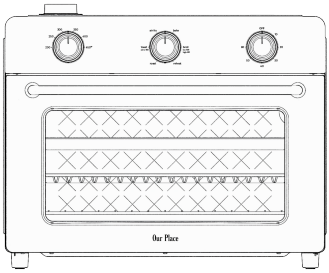

Air Fryer Oven APL.LWO.ESN
120V 60Hz 1700W

What a Wonder(ful) Oven

Unlock the many wonders of countertop cooking with one cute, convenient, and efficient appliance. Your new Large Wonder Oven® is here to supply all things roasty and toasty, fried and crispy, baked and broiled — with the simple twist of a knob. It will revitalize stale bread (thanks to the steam infusion), create impossibly crispy wings (thanks to the air frying feature), deliver fresh-baked cookies on demand, and so much more.

⚠ IMPORTANT

SAVE THESE INSTRUCTIONS

Please read and keep these instructions handy. These instructions will help you learn to use your Large Wonder Oven properly and thoroughly so that you can achieve consistent, professional results.

FOR HOUSEHOLD USE ONLY. NOT INTENDED FOR COMMERCIAL USE.

Contents

Important Safeguards	1
Special Cord Instructions	3
Safety Precautions	4
Installation Precautions	8
Parts and Accessories	9
Control Panel	12
Before Your First Use	14
Instructions for Use	14
Care and Cleaning	15
Helpful Tips	16
Replacement Parts	18
Troubleshooting	19
Warranty	21

SAVE THESE INSTRUCTIONS.

FOR HOUSEHOLD USE ONLY. NOT INTENDED FOR COMMERCIAL USE.

IMPORTANT SAFEGUARDS

When using electrical appliances, especially when children are present, basic safety precautions should always be followed to reduce the risk of fire, electric shock, personal injury and/or property damage, including the following:

⚠ WARNING

Read all instructions prior to using the appliance and its accessories.

1. To eliminate choking hazards for young children, remove and safely discard any packing materials before using the appliance for the first time.
2. Take inventory of all contents to ensure you have all parts needed to properly and safely operate your appliance.
3. **Unplug appliance from outlet when not in use and before cleaning. Allow to cool before cleaning or handling, and putting on or taking off parts.**
4. Keep the appliance and its cord out of reach of children. **DO NOT** allow the appliance to be used by children or individuals with certain disabilities. Close supervision is necessary when the appliance is used by or near children.
5. **DO NOT** touch hot surfaces. Appliance surfaces, including the door and outer surface of the appliance, are hot during and after operation.
6. Use caution when inserting or removing anything from the appliance, especially when hot. To prevent burns or personal injury, always use protective heat pads or insulated oven mitts, or use handles and knobs where available, when inserting, removing, or handling items from the appliance. Alternatively, allow the appliance to cool down before handling.
7. To avoid the possibility of fire, **NEVER** leave the appliance unattended while cooking. Be sure to turn off the power by turning the timer dial to OFF and unplug the power cord when you leave the appliance unattended.
8. **DO NOT** rest cooking utensils or baking dishes on the glass door.
9. **DO NOT** place hands inside the appliance during operation.
10. **DO NOT** use outdoors. **DO NOT** use in moving vehicles or boats.
11. **DO NOT** put oversized foods or metal utensils in the appliance. Doing so may cause fire or electric shock.
12. When using this appliance, provide adequate space (at least 1 inch above and on all sides) for air circulation. **DO NOT** place anything underneath the appliance that would restrict airflow.

SAVE THESE INSTRUCTIONS.

FOR HOUSEHOLD USE ONLY. NOT INTENDED FOR COMMERCIAL USE.

13. A fire may occur if the appliance is covered or touching flammable materials, including curtains, draperies, walls, etc. when in operation.
14. **DO NOT** spray any type of aerosol spray or flavoring inside the appliance while cooking.
15. Extreme caution must be used when moving an appliance containing hot oil or other hot liquids.
16. **DO NOT** cover the crumb tray or any part of the appliance with metal foil. Doing so may cause the appliance to overheat or cause a fire.
17. **DO NOT** use the appliance with the crumb tray incorrectly installed. Crumb tray **MUST** be placed below lower heating elements.
18. To protect against fire, electric shock, or injury, **DO NOT** immerse the cord, plug, or appliance in water or other liquids. **DO NOT** splash water on the appliance.
19. **DO NOT** use the appliance with damage to the power cord or plug. Regularly inspect the appliance and power cord. If the appliance malfunctions or has been damaged in any way, immediately stop use and email hello@fromourplace.com.
20. **DO NOT** allow electrical power cords other than the one supplied with the appliance to come in contact with the appliance.
21. Never use an outlet below counter level. **DO NOT** let the cord hang over the edge of a table or counter, or touch hot surfaces.
22. **DO NOT** place the appliance on top of or near other equipment, such as a microwave oven. Heat from the other item may cause malfunction, or the heat and steam from the appliance may cause the other item to malfunction or overheat.
23. **DO NOT** place any other equipment or accessories on top of the appliance. Heat and steam from the appliance may cause the other items to malfunction or overheat.
24. Intended for countertop use only. **DO NOT** place the appliance near the edge of a countertop, on or near a hot gas or electric burner, or in a heated oven. Ensure the surface is level, clean, and dry.
25. Before placing any accessories into the appliance, ensure they are clean and dry.
26. **DO NOT** place any of the following materials in the appliance: flammable items (paper, cardboard, plastic, wood, etc.) or any items other than food or Our Place supplied accessories.
27. Do not operate your appliance in an appliance garage or under a wall cabinet. When storing in an appliance garage, always unplug the unit from the electrical

outlet. Not doing so could create a risk of fire, especially if the appliance touches the walls of the garage or the door touches the unit as it closes.

28. Strictly follow the Care and Cleaning instructions on pg. 15. **DO NOT** clean with metal scouring pads. Pieces of the pad can break off and touch electrical parts, creating a risk of electric shock.
29. Do not attempt to dislodge food when the appliance is plugged into the electrical outlet.
30. For any maintenance questions other than cleaning, email hello@fromourplace.com.
31. To disconnect, turn the timer dial to OFF, then remove the plug from the wall outlet.
32. **DO NOT** use the appliance as a source of heat or for drying.
33. The appliance is for household use only.

SAVE THESE INSTRUCTIONS.

FOR HOUSEHOLD USE ONLY. NOT INTENDED FOR COMMERCIAL USE.

Special Cord Instructions

A short power-supply cord is provided to reduce the risks of children grabbing the cord or becoming entangled in or tripping over a longer cord. **DO NOT** use an extension cord.

About the Plug

This appliance has a polarized plug (one blade is wider than the other). To reduce the risk of electric shock, this plug is intended to fit into a polarized outlet only one way. If the plug does not fit fully in the outlet, reverse the plug. If it still does not fit, contact a qualified electrician. Do not attempt to modify the plug in any way.

SAFETY PRECAUTIONS

These symbols indicate the degree of harm or damage that may be caused by improper use.

WARNING Indicates **actions that may cause death or serious injury**

CAUTION Indicates **actions that may cause minor injury**

These symbols indicate requirements during use of the appliance.

Indicates **prohibitied** actions that must not be performed

Indicates **required** actions that must be performed

Indicates **risk of electric shock**

Indicates **risk of scalding or burns**

Indicates **general risk**

WARNING

This appliance is not intended for use by persons (including children) with reduced physical, sensory, or mental capabilities, or lack of experience and knowledge, unless they have been given supervision or instruction concerning use of the appliance by a person responsible for their safety. Children should be supervised to ensure that they do not play with the appliance. Doing so may cause scalding (or burns), injury, or electric shock.

Do not disassemble, repair, or modify this appliance. Doing so may cause malfunction or fire. For repair, please contact hello@fromourplace.com.

Do not place the appliance on flammable surfaces such as wooden counters, wood flooring, or carpet. Doing so may cause a fire.

Do not submerge the appliance in water. Do not splash water on the appliance. Doing so may cause a short circuit or electric shock.

Do not put anything other than water in the water inlet. Adding oil, seasonings, or food may cause electric shock or fire.



Do not add more than 20 mL (4 teaspoons) of water to the water inlet at one time. Do not pour water anywhere other than into the water inlet. Doing so may cause water to spill, causing malfunction, scalding, or electric shock.

Do not put oil in the bake pan. Doing so may cause a fire.

Do not insert or remove the power plug with wet hands. Doing so may cause electric shock.

Do not use the appliance in any countries other than the U.S. and Canada. Doing so may cause fire or malfunction.

Do not apply pressure on the power cord. Do not do any of the following, as these may cause the power cord to overheat and catch fire: scratch, modify, bend, pull, step on, twist, or place the cord near heating devices. Do not place heavy items on the cord or use while it is bundled.

Do not use the appliance for any purpose other than those recommended in this instruction manual and by Our Place. Doing so may cause accidents such as fire or electric shock. Our Place accepts no responsibility in case of improper use or failure to follow these instructions.

If smoke or fire appears during cooking, do not open the door until the flames go out and do not attempt to extinguish with water. Doing so may cause the glass to shatter or the fire to spread. Instead, turn the appliance off if safe to do so and then unplug the power cord.

Do not block or insert anything into the air vents (the sides and underneath the door, and the bottom back side of the main unit) or cover the appliance while it is in use. Doing so may cause burns, fire, or malfunction.

Do not insert food that touches the top heating element. Doing so may cause fire.

Do not use parchment paper, baking paper, or paper baking cups in the appliance. Do not use plastic or silicone containers. Doing so may cause fire.

Do not use the appliance with food residue in the crumb tray. It may carbonize and catch fire.

Do not connect the appliance to an external timer or separate remote-control system. The appliance is not intended to be used with an external timer or separate remote-control system.

In the event of an abnormality or malfunction, stop using the appliance immediately. Failure to do so may cause fire, electric shock, or injury. In the event of an abnormality or malfunction, please contact hello@fromourplace.com.

Examples of abnormalities and malfunctions:

i. The power does not turn off.
ii. The power cord and power plug are unusually hot.
iii. The appliance is deformed or unusually hot.
iv. The appliance falls or tips over.
v. The power cord is broken or stops powering the appliance when touched.
vi. The appliance is hot when it is not in use.
vii. The heater tube is cracked.

Use an outlet that meets the appliance rating (1700 W). Do not plug other electrical devices into the outlet when using the appliance. Using the appliance with an outlet that does not meet the appliance rating, or on a shared outlet with other devices, may cause overheating, resulting in fire.

Clean the power plug regularly. Dust accumulated on the power plug may cause condensation, which can damage the cable and cause fire. Unplug power plug from outlet and wipe it with a dry cloth.

Be sure to clean the appliance after use. Failure to do so may cause food residue left inside the appliance to carbonize, causing fire and smoke.

When unplugging the appliance, pull on the plug rather than the cord. Failure to do so may cause fire due to electric shock or short circuit.

Caution

Stay near the appliance while operating. Failure to do so may cause fire. Be sure to turn the power off before leaving the appliance.

Do not touch any parts except the handle or dials during or immediately after operation. Doing so may cause burns, as the appliance becomes hot during cooking.

Do not cook for longer than necessary. Doing so may cause fire.

Do not heat more than necessary. Overheating may cause the food to catch fire.

Do not apply excessive force to the glass window or allow it to become wet. The glass may break, causing injury.

Do not cook with the door open. Doing so may cause fire.

Do not heat canned or bottled foods directly. Doing so may cause scalding, burns, or injury due to bursting or deformation.

Always use a heat-proof dish when cooking meat, fish, and fried foods. Be sure to place the food on a heat-proof dish to prevent food or oil from falling onto the heating elements and causing fire. Wash accessories after each use.

Use caution when using containers made of materials other than heat-proof metal or glass. If using ceramic or glass pans or dishes, it is important that they are oven safe to prevent cracking.

When using aluminum foil, make sure that it does not touch the heater tube. The aluminum foil may melt and adhere to the heater tube, resulting in malfunction, electric shock, or fire.

Do not use lids in the appliance. Pressure build up in a covered pan or dish may cause hot ingredients to expel or the dish to crack.

When taking out food or containers, use tongs or pot holders. Failure to do so may cause burns.

Be sure to power off the appliance by setting the timer dial to OFF when removing food from the appliance. Failure to do so may cause burns.

Use the Our Place-provided wire rack, bake pan, or air fryer basket. Caution should be exercised when using other pans or dishes and may lead to injuries or accidents.

Do not bake bread with butter or jam. There is a chance the bread will catch fire.

Be sure to insert the crumb tray and wire rack when toasting. Failure to do so may cause malfunction.

INSTALLATION PRECAUTIONS

WARNING

Do not place objects or accessories on top of, underneath, next to, inside, or in gaps around the appliance. Doing so may cause smoke, fire, or burns.

Do not install the appliance in a location which may be affected by heat or in enclosed areas. Doing so may cause fire.

Place the appliance on a flat, stable surface. Otherwise, the door may open during operation. This may cause water to spill, causing electric shock. It may also cause the appliance to tip over.

Install the appliance with clearances to the top, left, right, and rear as illustrated below. If the wall is made of heat-sensitive material such as plastic, leave more space around the appliance. Heat and steam may build up, causing malfunction, fire, or discoloration/deformation of the surrounding walls.

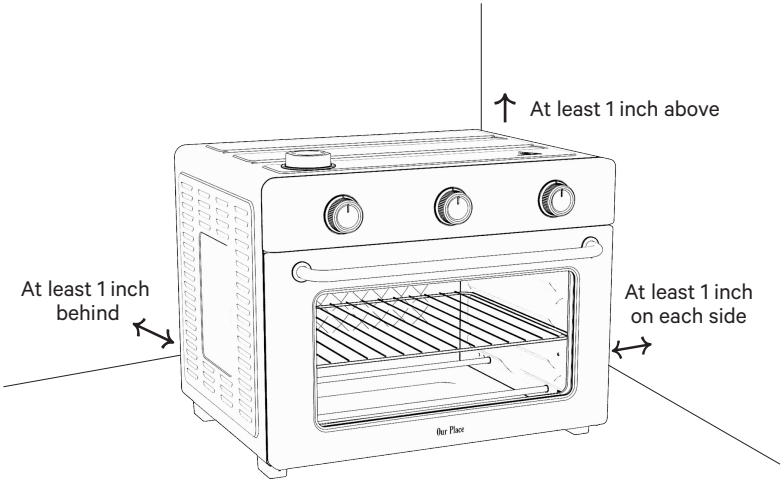

PARTS AND ACCESSORIES

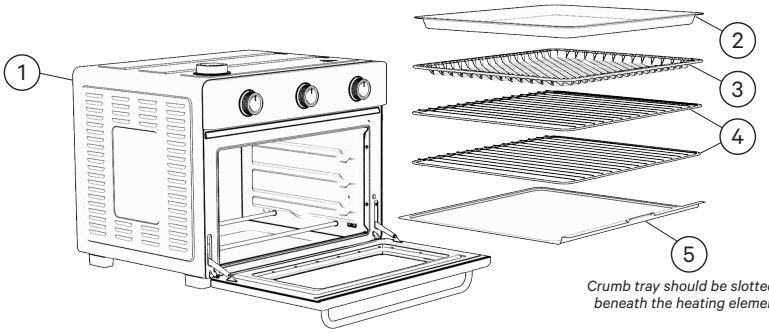

Crumb tray should be slotted in beneath the heating element.

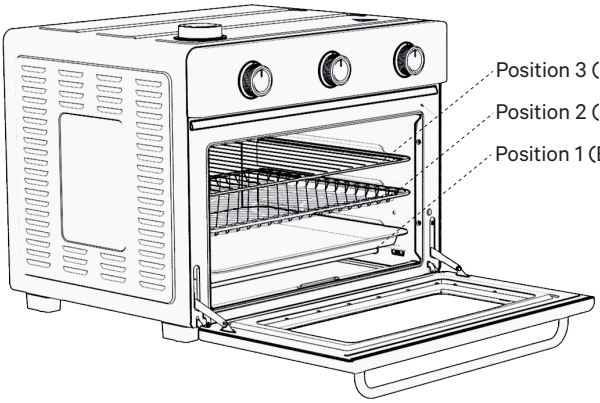

1. Large Wonder Oven	4. Wire Rack (2x)
2. Bake Pan	5. Crumb Tray
3. Air Fryer Basket	*Attached power cord not shown

Air Fryer Basket

Can be used in positions 2 and 3

Position 2 (Middle)



Position 3 (Top)

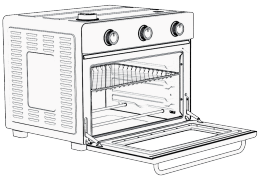

Bake Pan

Can be used in all positions

Position 1 (Bottom)

Position 2 (Middle)

Position 3 (Top)

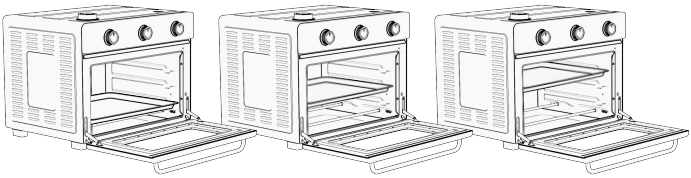

Wire Rack

Can be used in all positions

Position 1 (Bottom)

Position 2 (Middle)

Position 3 (Top)

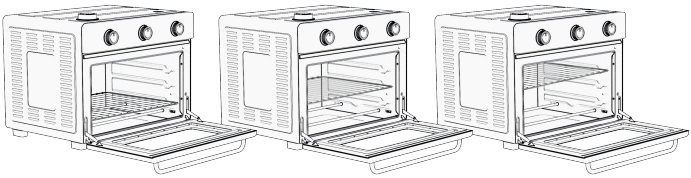

Air Fryer Basket and Bake Pan

Bake Pan: Position 1 (Bottom)
Air Fryer Basket: Position 2 (Middle)



Bake Pan: Position 2 (Middle)
Air Fryer Basket: Position 3 (Top)



1. **Large Wonder Oven**
2. **Air Fryer Basket**
    a. The air fryer basket is grated to allow air to pass through for even cooking. The air fryer basket should be placed in the middle or top racks (positions 2 and 3), with the bake pan underneath in the bottom or middle racks (positions 1 and 2), depending on where the air fryer basket is placed.
3. **Wire Rack**
    a. The wire rack can be used in rack positions 1, 2 and 3 (bottom, middle and top). Foods may be placed directly onto the wire rack. If using the Toast function, do not place the air fryer basket or bake pan underneath the wire rack. If cooking with foods that may drop grease, place the bake pan underneath the wire rack.
4. **Bake Pan**
    a. The bake pan can be used in rack positions 1, 2 and 3 (bottom, middle and top). We also recommend placing the bake pan below the air frying basket when air frying, as it doubles as a drip pan.
5. **Crumb Tray**
    a. Always ensure that the removable crumb tray is placed underneath the bottom heating tube, whenever the appliance is being used. Never operate the appliance without the crumb tray in place. DO NOT slide into any rack positions.

Tips & Tricks

Because of its compact size, the Wonder Oven preheats and cooks faster than your oven, so times and temperatures may vary.

For best results, use the middle rack (position 2). Check and turn your food as needed.

If using multiple racks, keep an eye on what's cooking and rotate the trays, baskets, or racks as needed. *Tip: Want crispier results? Use the top rack.*

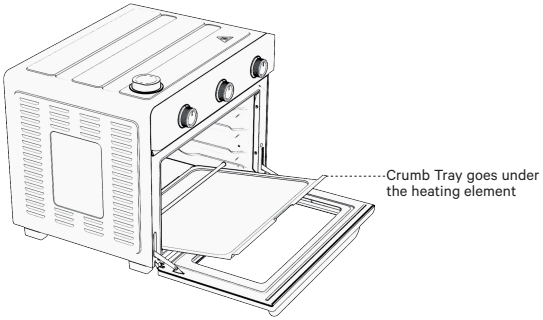

CONTROL PANEL

1. **ON/OFF/TIME dial:** Use to turn the appliance on or off, and to select or adjust cooking time. If your cooking time is less than 10 minutes, turn the dial past the 10 minute mark, then back down to your desired time.
    - **OFF:** When the power is turned off, the power indicator light will be off and the fan will not be running.
    - **ON:** When the power is turned on, the power indicator light will be on and the fan will be running.
    - **TIME:** When cooking time is complete, a chime will sound.
2. **MODE dial**: Use to select the cooking function: air fry, broil, roast, bake, toast, or reheat.
3. **TEMP dial:** Use to select or adjust temperature.
4. **Water inlet:** Use to activate the steam infusion function. The inlet's lid doubles as a water measuring cup. To activate the steaming function, remove the lid, flip to cup side, measure up to 20 mL or 4 teaspoons of water (depending on the recipe), then carefully pour into the inlet and replace the lid.

NOTE: The water inlet's measuring cup is tiny on purpose! Never add more than 20 mL or 4 teaspoons of water at a time. Never put liquids other than water in the inlet.

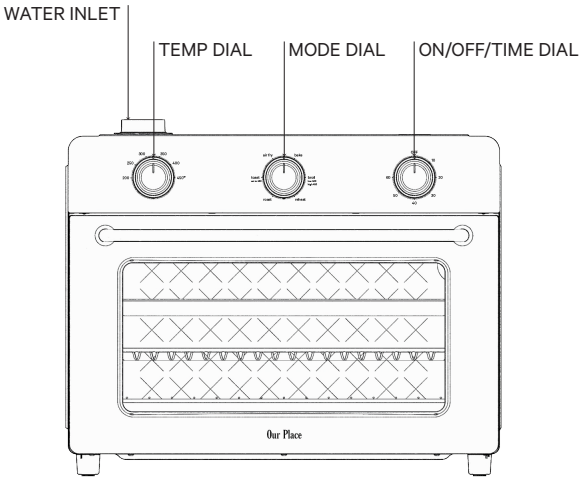

For more information, tips, and tricks about the Large Wonder Oven's steam infusion function, please refer to the Helpful Tips section on page 16 of this manual.

Guide for adding water:

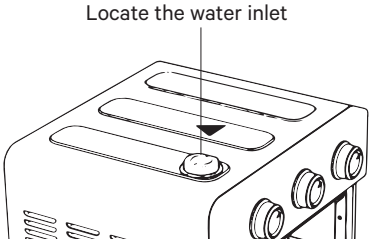

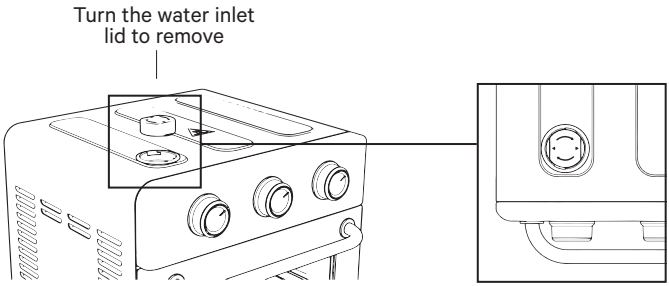

The lid doubles as a measuring cup. Measure your desired amount of water in the cup, pour into the inlet, and replace the lid. The cup fits up to 20 mL (4 teaspoons) of water.

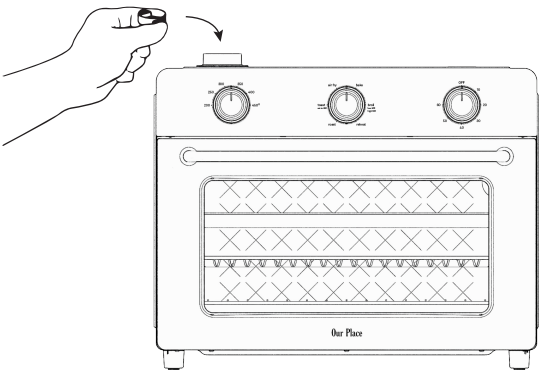

Before Your First Use

1. Unpack the appliance, then remove and discard any packaging material from the unit.
2. Remove all accessories from the package and read this manual carefully. Please pay close attention to operational instructions, warnings, and important safeguards to avoid any injury or property damage.
3. Wash the air fry basket, wire rack, bake pan, and crumb tray in warm, soapy water, then rinse and dry thoroughly, according to the Care and Cleaning section of this manual. **DO NOT** put air fryer basket, wire rack, bake pan, or crumb tray in the dishwasher. Finishes may degrade. **NEVER submerge the main unit in water.**
4. Place the appliance on a flat, stable, and level surface.
5. Ensure that the oven is at least 1 inch away from the wall or any other objects.
6. We recommend performing a trial run of your appliance without food at 400°F (200°C) for 10 minutes on Bake mode.
7. Conduct the trial run in a well-ventilated area as a small amount of smoke and odor may be detected. This is normal and should be expected.
8. Always ensure that the removable crumb tray is placed underneath the bottom heating tube, whenever the appliance is being used. Never operate the appliance without the crumb tray in place.

Instructions for Use

Follow these simple steps:

1. To preheat, set the oven to your desired MODE and TEMP and set TIME dial to 5 minutes. After 5 minutes has passed, a chime will sound, meaning the oven is preheated.
2. Choose your desired accessory and place it into the necessary position.
3. Turn the MODE dial to choose your desired function.
4. Turn the TEMP dial to select your cooking temperature.
5. Turn the TIME dial to set your cooking time (up to 60 minutes). If your cooking time is less than 10 minutes, turn the dial past the 10 minute mark, then back down to your desired time.
6. (Optional) Add water to the inlet if using the steam infusion function. Water should only be added once the oven is heated; adding beforehand will not produce steam. The steaming function can be used with any MODE.
7. Once the timer reaches OFF, the oven will chime to indicate cooking has finished. If cooking is done before the timer reaches OFF, carefully remove food and turn the dial to OFF manually.

Care & Cleaning

- Clean the appliance and all accessories after every use.
- Before cleaning, unplug the power cord and allow the main unit to cool sufficiently.
    - Wear thick gloves when cleaning. Failure to do so may cause injury to the hands or fingers.
    - Do not use a dishwasher. This can be a cause of warping, changing color, and corrosion.
- **DO NOT** use abrasive cleaners, as they will damage the finish. Simply wipe the exterior with a clean, damp cloth and dry thoroughly. Apply the cleaning agent to a cloth, not directly onto the appliance. Do not use excess pressure when cleaning the area of the control panel as it could cause the text to be removed over time.
- To clean the interior walls and bottom of the oven, first remove all accessories, then use a damp, soapy cloth or sponge. Never use harsh abrasives or corrosive products, including oven cleaner sprays. These could damage the oven surface. **NEVER** use steel wool pads on the appliance or accessories.
- The wire rack, bake pan, air fryer basket, and crumb tray should be hand washed in hot, soapy water, or use a nylon scouring pad or nylon brush. **The cooking accessories accompanying the appliance are not dishwasher safe!**
- Excess food particles could cause smoking and will be hard to remove from tray. To remove baked-on grease or burnt food particles, you can soak the crumb tray in hot, soapy water or use non-abrasive cleaners.
- The top interior of the appliance should be cleaned to remove excess grease that may accumulate after cooking greasy foods in the same manner as the instructions for the exterior of the appliance stated above. Doing so will prevent smoking in the oven during subsequent uses.

Helpful Tips

Steam Infusion

The Large Wonder Oven allows for steam infusion — a magical way to help meats stay juicy and tender, or to make breads and desserts that are extra light and fluffy.

The Large Wonder Oven's steam infusion function creates a small amount of steam which locks in moisture and draws out delicious aroma and flavor. To use this function, first turn on your Large Wonder Oven and set your time and temperature. Once preheated, you can activate the steam. Simply remove the water inlet's lid, flip it over to the cup side, measure a small amount of water, then carefully pour the water into the inlet and replace the lid. See below for suggested water amounts based on food type.

Reminder: Only add water to the water inlet once the Large Wonder Oven is heated — adding water prior to heating will not create steam.

FOOD	WATER AMOUNT	BENEFIT
Bread	10 mL or 2 tsp.	Adds lightness and fluffiness
Steak	10 mL or 2 tsp.	Keeps meat juicy and tender
Fish	10 mL or 2 tsp.	Keeps fish moist
Chicken wings	10 mL or 2 tsp.	Keeps chicken tender

Convection

The Large Wonder Oven uses a convection fan to circulate air during the cooking process. The air circulation provides more even and consistent cooking. In many recipes, this also facilitates faster cooking, saving you time.

Cooking Modes

Air Fry

- With the combined power of intense heat and rapidly circulating air, the Air Fry function works well for just about any type of food. It results in that crunchy, fried texture we all love without the use of extra oils. (Think: crispy nuggets and snappy veggies.) If you can bake it but want a bit more bite, try the Air Fry setting.

Bake

- Ideal for cooking all types of food, the Bake setting evenly distributes heat from the bottom and up throughout the oven. This is the classic way to make cookies, breads, meats, and many frozen foods.

Broil

- Broiling uses the top heating element to force heat directly down onto whatever is being cooked. It's ideal for adding a beautiful browned crust to a cheesy pasta dish, giving a unique depth of flavor to pineapple slices, or adding extra heat to thin cuts of meat.
- For a high Broil, we recommend using the top rack (position 3).
- For a low Broil, we recommend using the middle rack (position 2).

Reheat

- Use this function to heat up last night's leftovers. If your food is coming straight from the fridge, a temperature of 300°F — 325°F should get things toasty. Reheat times will vary.
- You can also use Reheat like a warming lamp to keep already-cooked foods nice and temperate. We recommend setting the TEMP dial to 200°F and adding 5 mL (1 teaspoon) of water to the water inlet.
- The Reheat mode should only be used for solid foods.

Roast

- The heavy-hitting, higher-heating Roast mode is ideal for cooking a variety of denser meats and poultry.
- For larger pieces of meat, we recommend using the bottom rack (position 1).

Toast

- Looking to brown your breads, bagels, English muffins, croissants, and other baked goods? The Toast mode crisps up the outsides while keeping the insides soft and fluffy.
- Note: Both the top and bottom heating elements will be working, so you'll be toasting two sides at once.

Replacement Parts

Looking for an extra air fryer basket, bake pan and more? Scan this QR code for replacement parts. You can find recipes, FAQs and more there, too.

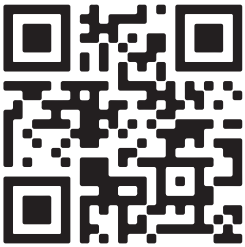

Troubleshooting

PROBLEM	PROBABLE CAUSE	
The appliance will not turn on.	1	Make sure the oven is plugged in.
	2	Turn the TIME dial past the OFF position.
Foods are not completely cooked.	1	Increase cooking TEMP or TIME.
Foods are over cooked or burned.	1	Decrease cooking TEMP or TIME.
	2	Make sure foods are not too closely placed on the bake pan, wire rack, or air fryer basket.
Foods are cooked unevenly.	1	Preheat the oven.
	2	Make sure foods are not placed too closely together on the bake pan, wire rack, or air fryer basket.
	3	If using the air fryer function, flip food halfway through cooking to prevent food from cooking too quickly.
Smoke or odor occurs.	1	Smoke or odor may occur when using this appliance for the first time. This will eventually disappear. Run an additional cycle without food as recommended on page 14.
	2	When the oven is cooking, excess oil or fatty foods may cause white smoke. Make sure the inside of the oven is cleaned properly and not greasy before use.
Steam comes out the door.	1	Steam from the boiler or white vapor from the moisture in the bread may come out of the door during cooking. This is normal. However, keep hands and face away from steam as it is very hot.

Noise from the control panel.	1	During cooking, a cooling fan turns on to protect sensitive electronic components from overheating. This fan can sometimes remain on for a few minutes after cooking has finished.
The power indicator light does not light up when the timer dial is activated.	1	Is the power turned off? ▶ Turn the timer dial to turn on the power.
	2	Is the power plug disconnected from the outlet? ▶ Insert the power plug securely into the outlet.
	3	Has the breaker tripped? ▶ Reset the tripped breaker.
The power does not turn off after about 30 seconds without operation.	1	Possible malfunction. Contact Our Place at hello@fromourplace.com.
The door will not close.	1	Are the wire rack, bake pan, air fryer basket, and/or crumb tray properly attached? ▶ Refer to “Before Your First Use” (p. 14) and insert the accessories correctly.
	2	Is anything caught between the main unit and the door? ▶ Remove any such items.
When water is added, it makes a sizzling sound.	1	When water is added, it will make a sound as it evaporates inside the inlet, but this does not affect the cooking.
Water remains in the water inlet after use.	1	If water doesn’t drain after use, the water inlet may be clogged, or the water inlet is bent. Contact Our Place at hello@fromourplace.com.
Water is dripping onto the counter from under the door.	1	This is normal. The condensation created from high moisture content foods such as frozen breads will run down the inside of the door and can drip onto the counter.

Warranty

We stand by our products. We want you to have the best experience with your Large Wonder Oven, so our team is here to help. Please contact us at hello@fromourplace.com if you have any questions regarding our warranty program or need advice on using your product. Lagom Kitchen Company, d/b/a “Our Place” (“Our Place”, “we”, or “our”) offers a limited warranty for the Large Wonder Oven if purchased and used in the United States. This Limited Warranty is made solely by Our Place and no other person or entity and is offered on the terms and conditions set forth in this Limited Warranty, also available on www.fromourplace.com/warranty.

What does this warranty cover?

This warranty covers defects in materials and workmanship for the Large Wonder Oven when used normally in accordance with Our Place’s user manual.

What does this warranty not cover?

This warranty does not cover any damages due to:

- Use of the product not for regular household purposes or other misuse or abuse;
- Failure to follow the user manual (e.g. use, warning, maintenance, and care instruction);
- Normal wear and tear;
- Modifications to the product or use with products not approved by Our Place;
- Stains and discolorations;
- Glass parts and other accessory items that are packed with the unit;
- Installation with an incorrect electric current, voltage, circuit breaker rating, extension cord, or power supply;
- Damages or defects caused by service or repair of the product performed by an unauthorized service provider;
- Loss or damage in transit after initial delivery; and
- Accidents or other actions beyond our reasonable control.

Who is covered by this warranty?

This limited warranty covers the original retail consumer purchaser of a covered product or a consumer that receives the product new and unused as a gift from the original retail purchaser. Coverage terminates if a covered consumer sells or otherwise transfers the product. This limited warranty applies only to products purchased directly from Our Place or an Our Place authorized retailer. This limited warranty is not transferable.

How long does this warranty last?

The warranty period for the Large Wonder Oven is limited to one (1) year from the date of delivery to the purchaser.

How do you exercise your rights under the Limited Warranty program?

Please complete our Warranty Claim form available at fromourplace.com/pages/warranty to submit a claim for evaluation. Proof of purchase is required for all claims, including gifted products. As part of the investigation into the claim, we may require you to submit photos, answer questions about the product and your use of the product, and/or try recommended techniques to rectify the issue first.

If your claim is approved, Our Place will either repair, replace or refund the purchase price of the product, as determined by Our Place in its sole discretion. If we require the defective item to be returned to us, we will pay for return shipping if the item is returned within the country of purchase for our non-appliance products. For appliances, you will be responsible for the costs incurred to mail the returned product to us, including any applicable accessories.

While we will strive to exchange your product for the same make, color and model as your original purchase, we cannot make any guarantees. If an Our Place product, component or product color has been discontinued at the time of repair or replacement or if Our Place determines, in its sole discretion, that such repair or replacement is not commercially practicable or cannot be timely made, Our Place reserves the right to repair or replace such product or product component with a product model or color that is similar but not exactly the same as the product or component model originally purchased. Replacement with the same color cannot be guaranteed. At its sole discretion, Our Place is entitled to replace each defective component individually, as opposed to the entire product, and some assembly may be required by you. For example, if you purchase the Large Wonder Oven and only one component is found defective, Our Place may, at its discretion, opt to replace either the defective component or the entire Large Wonder Oven. Our Place reserves the right to utilize comparable reconditioned, refurbished, repaired, or re-manufactured products or parts in the warranty repair or replacement process. Such products and parts will be comparable in function and performance to an original product or part. The original warranty period will remain and will not restart with this replacement item, regardless of the time remaining under the original warranty period.

Disclaimer of Implied Warranties

EXCEPT AS EXPRESSLY PROVIDED HEREIN AND TO THE EXTENT PERMITTED BY LAW, THIS WARRANTY AND THE REMEDIES SET FORTH ARE EXCLUSIVE AND IN LIEU OF ALL OTHER WARRANTIES, REMEDIES AND CONDITIONS, WHETHER ORAL, WRITTEN, STATUTORY, EXPRESS OR IMPLIED. OUR PLACE DISCLAIMS ALL STATUTORY AND IMPLIED WARRANTIES INCLUDING, WITHOUT LIMITATION, WARRANTIES OF MERCHANTABILITY AND FITNESS FOR A PARTICULAR PURPOSE, WORKMANSHIP, MERCHANTABILITY, MERCHANTABLE QUALITY, DURABILITY AND WARRANTIES AGAINST HIDDEN OR LATENT DEFECTS, TO THE MAXIMUM EXTENT PERMITTED BY LAW. IN SO FAR AS SUCH WARRANTIES CANNOT BE DISCLAIMED, OUR PLACE LIMITS THE DURATION AND REMEDIES OF SUCH WARRANTIES TO THE DURATION OF THIS EXPRESS WARRANTY AND, AT OUR PLACE'S OPTION, THE REPAIR OR REPLACEMENT SERVICES DESCRIBED HEREIN. SOME STATES DO NOT ALLOW LIMITATIONS ON HOW LONG AN IMPLIED WARRANTY (OR CONDITION) MAY LAST, SO THE LIMITATION DESCRIBED ABOVE MAY NOT APPLY TO YOU.

Limitation of Liability

THE REMEDIES DESCRIBED ABOVE ARE YOUR SOLE AND EXCLUSIVE REMEDIES AND OUR PLACE'S ENTIRE LIABILITY FOR ANY BREACH OF THIS WARRANTY. This warranty gives you specific legal rights, and you may also have other rights which vary from state to state, or country to country.

OUR PLACE'S LIABILITY WILL UNDER NO CIRCUMSTANCES EXCEED THE ACTUAL AMOUNT PAID BY YOU FOR THE DEFECTIVE PRODUCT. OUR PLACE WILL NOT UNDER ANY CIRCUMSTANCES BE LIABLE FOR ANY CONSEQUENTIAL, INCIDENTAL, SPECIAL OR PUNITIVE DAMAGES OR LOSSES ARISING OUT OF OR IN CONNECTION WITH THE USE OR PERFORMANCE OF THE PRODUCTS OR DAMAGES WITH RESPECT TO ANY ECONOMIC LOSS, PERSONAL INJURY, LOSS OF PROPERTY, LOSS OF REVENUES OR PROFITS, LOSS OF ENJOYMENT OR USE, COSTS OF REMOVAL, INSTALLATION OR OTHER INDIRECT, INCIDENTAL OR CONSEQUENTIAL DAMAGES OF ANY NATURE OR KIND. Some states do not allow the exclusion or limitation of incidental or consequential damages, so the preceding limitation or exclusion may not apply to you.

Looking for an extra air fryer basket, bake pan and more? Scan this QR code for replacement parts. You can find recipes, FAQs and more there, too.

Our Place®

Need help? We're always here at hello@fromourplace.com