# USER MANUAL

TURBRO

## PORTABLE AIR CONDITIONER

**Model:**

Greenland GLP10AC-V

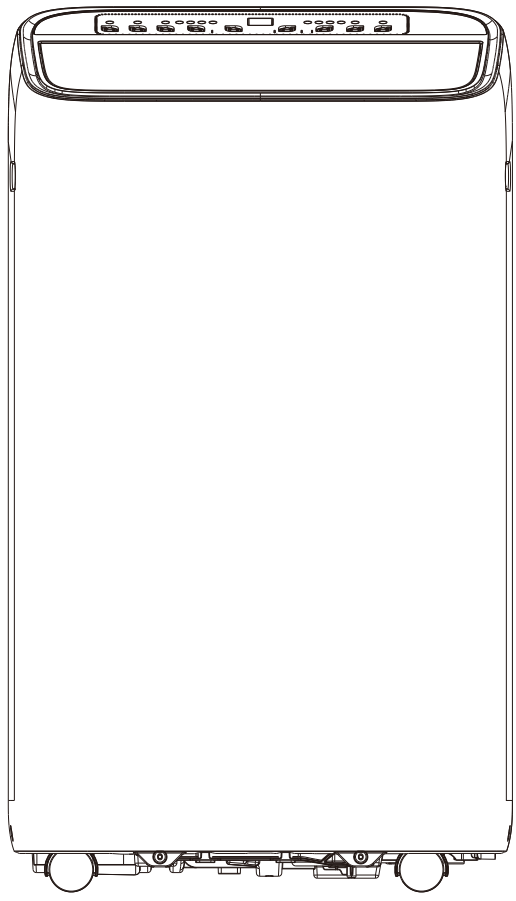

**Before using TURBRO Portable Air Conditioner, please read this manual carefully and retain it for future reference.**

# Tips for First-Time Use

1. Allow the unit to sit upright for at least 3-4 hours before powering on. Shipping carriers may set the unit on its side, which causes the refrigerant to pool in certain areas. Standing the unit upright for 3-4 hours allows the refrigerant to move freely within the coils.
2. Some parts with sharp edges may cause injury, so gloves are highly recommended for unpacking and installing.
3. Run the unit continuously for 24 hours after letting the unit stand upright for 3-4 hours. This allows the unit to work out any “kinks” that may have resulted during shipping from our factory to your doorstep.
4. If you have any diffculties during installation, please contact Customer Support Team via support@turbro.com for help.
5. If you have any problems with your product, please send us an email before submitting a return request, as there might be a simple solution for your issue.

**Please read this operating manual carefully before operating the unit.**

This unit uses a flammable refrigerant.

Before using the appliance, read the owner’s manual first.

Before installing the appliance, read the installation manual first.

Before repairing the appliance, read the service manual first.

The figures in this manual may be different from the material objects, please refer to the material objects for reference.

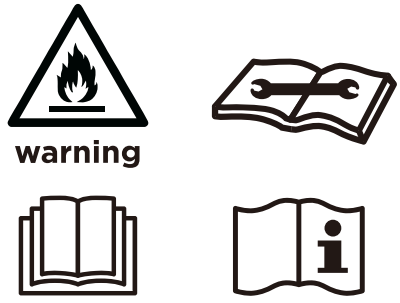


## Refrigerant Disclaimer

The refrigerant in this machine is fluoride R32, which is specially cleaned. The refrigerant is flammable and does not have any odor. Furthermore, it can lead to explosions under certain conditions. The flammability of the refrigerant is very low and can be ignited only by fire. Under normal operating conditions, these issues should not be of any major concern.

Compared to common refrigerants, R32 is a nonpolluting refrigerant with no harm to the ozonosphere. The effect on greenhouse effect is also lower than other common refrigerants. R32 has very good thermodynamic features which lead to high energy effciency. The units, therefore, need less refrigerant filling than other common refrigerants.

**⚠ WARNING**

1. Keep ventilation openings, in the appliance enclosure or in the built-in structure, clear of any debris or obstructions.
2. Do not attempt to accelerate the defrosting process or clean the unit in any way other than those recommended by the manufacturer. Should repair be necessary, contact TURBRO Customer Service Team.
3. Any repairs carried out by unqualified personnel may be dangerous.
4. Do not pierce or burn this appliance.
5. The appliance shall be installed, operated, and stored in a room with a floor area larger than 43ft² (4m²).
6. This appliance is filled with flammable gas R32. For repairs, strictly follow the manufacturer’s instructions only. Be aware that this refrigerant does not contain odor.
7. Read the user manual completely before using this appliance.

# CONTENTS

SAFETY INFORMATION ..... 01
PARTS DESCRIPTION ..... 03
INSTALLATION INSTRUCTIONS ..... 05
Installation Location ..... 05
Tool Suggested ..... 05
Installing Double-Hung Sash/Sliding Casement Windows ..... 06
Installing the Exhaust Hose ..... 07
OPERATING INSTRUCTIONS ..... 09
Control Panel ..... 09
Operating from the Control Panel ..... 09
Operating from the AIR.ai App ..... 12
Operating from the Remote Control ..... 13
Self-Diagnosis ..... 16
Water Drainage Methods ..... 16
Tips for Correct Use ..... 18
CLEANING ..... 18
Cleaning the Outer Case ..... 18
Cleaning the Air Filters ..... 19
Maintenance Checklists ..... 19
TROUBLESHOOTING ..... 20
WARRANTY & CUSTOMER SUPPORT ..... 22
Warranty ..... 22
Customer Support ..... 22

# SAFETY INFORMATION

- Please read all instructions before use and save this user manual for future reference. A digital version can be obtained from Customer Support.
- Your safety and the safety of others are very important to us. We have provided many important safety messages throughout this manual and on the appliance itself. Always read and follow all posted safety messages.
- To reduce the risk of fire, electric shock, injury, or death to persons using or near this appliance, please follow some basic safety precautions. These precautions include, but are not limited to, the following:

### Installation and Setup

- This appliance is not intended for use by any persons (including children) with reduced or restricted physical, mental, or sensory capabilities, or lack of experience and knowledge, unless under the direct supervision of a person responsible for their safety.
- Please keep plastic bags and sheets out of the reach of children as they might be mistakenly used for play. Packaging materials can become airtight chambers and may pose a risk of suffocation if not disposed of properly.
- When installing or moving the appliance, be careful not to pinch, crush, or damage the power cord.
- Never attempt to operate this appliance if it visibly damaged, malfunctioning, disassembled or has missing or broken parts. This includes exposed wiring on a damaged cord or electrical plugin. All repairs and servicing must be performed by qualified service personnel. Use only authorized TURBRO factory OEM parts.
- Keep the product away from fire. Do not store or use flammable gases or materials near the appliance.
- Do not use heating equipment near the appliance.
- In the event of a gas leak (propane gas, LP gas, etc.) do not operate this or any other appliance. Open a window or door to ventilate the area immediately.
- Only use the appliance in an upright position. Make sure the angle of inclination < 10°. Always place the appliance on a stable, flat, level surface to prevent the air conditioner from overturning.

### Electrical Safety Warning

- Always plug into a fixed 115V AC ground outlet.
- Push the power plug all the way into the wall outlet so that it will not loose.
- Never plug or unplug the appliance with wet hands.
- Always grip the plug firmly and pull straight out from the outlet when taking it out.
- Never unplug the appliance by pulling on the power cord.
- Never use the appliance if the outlet is damaged or loose.

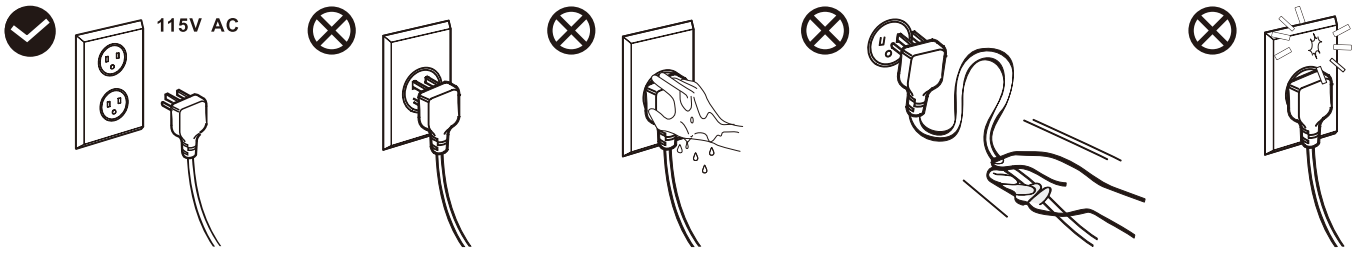

- This product should be plugged directly into a power outlet. Power outlets should be properly rated, protected, and sized in order to avoid electrical overload. Do not use a multiple-outlet power strip or extension cord. Failure to do so may result in short-circuit or electrical shock.
- Do not use an AC plug adapter with this appliance.
- Do not cut or remove the third (ground) prong from the power cord.

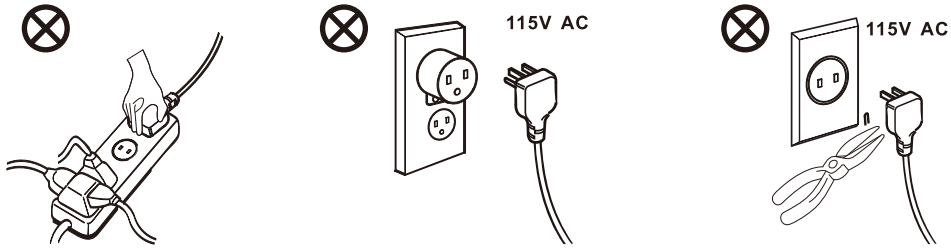


- Your air conditioner must be used in a properly grounded wall receptacle. If the wall receptacle you intend to use is not adequately grounded or not protected by a time-delay fuse or circuit breaker, have a qualified electrician install the proper wall power receptacle before using this appliance.
- Be sure that the air conditioner is properly grounded. To minimize shock and fire hazards, proper grounding is important. The power cord is equipped with a three prong grounding plug for protection against shock hazards.
- Do not cover the power cord with a rug or carpeting.
- Do not rest hot or heavy objects on the appliance and power cord.
- If the power cable is damaged, it must be replaced by the manufacturer or an authorized technical service center in order to avoid all risk.
- Do not damage, alter, excessively bend, twist, pull or heat the power cord.
- Do not run the air conditioner without the white plastic shell in place. This could result in mechanical damage within the air conditioner.
- During the installing or moving the appliance, be careful not to pinch, crush, or damage the power cord.
- Always unplug the unit from the outlet before cleaning or maintenance operations.

**Power Cord Operation (LCDI Plug)**

The power cord used with this air conditioner contains a current detection device designed to reduce the risk of fire. Always finish the test of the LCDI (Leakage Current Detection and Interruption) plug before use:

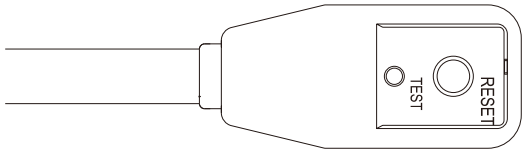


1. Plug in the Air Conditioner.
2. The power supply cord head has two buttons, a TEST button and a RESET button. Press the TEST button and notice a click as the RESET button pops out.
3. Press the RESET button. Once again notice a click as the button engages.
4. The power supply cord will now supply electricity to the unit.

**⚠ WARNING**

**If the TEST button does not cause the circuit breaker trip or the RESET button will not stay engaged, unplug the air conditioner immediately and contact TURBRO Customer Support.**

**NOTE:**

- Do not use this device to turn the unit on or off.
- Always make sure the reset button is pushed in for correct operation.
- The power supply cord must be replaced if it fails to reset when either the test button is pushed, or it cannot be reset.
- If power supply cord is damaged, it cannot be repaired. It must be replaced by one obtained from the product manufacturer.

# PARTS DESCRIPTION

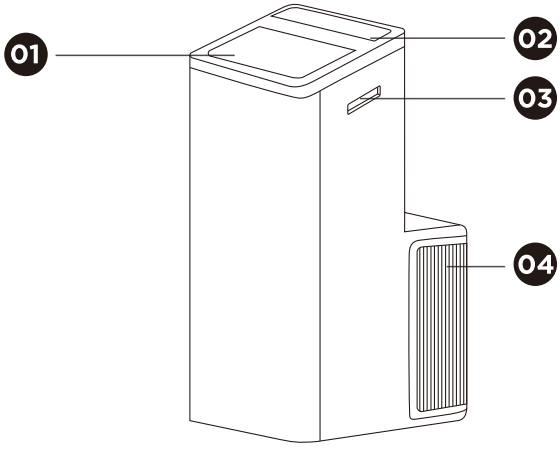


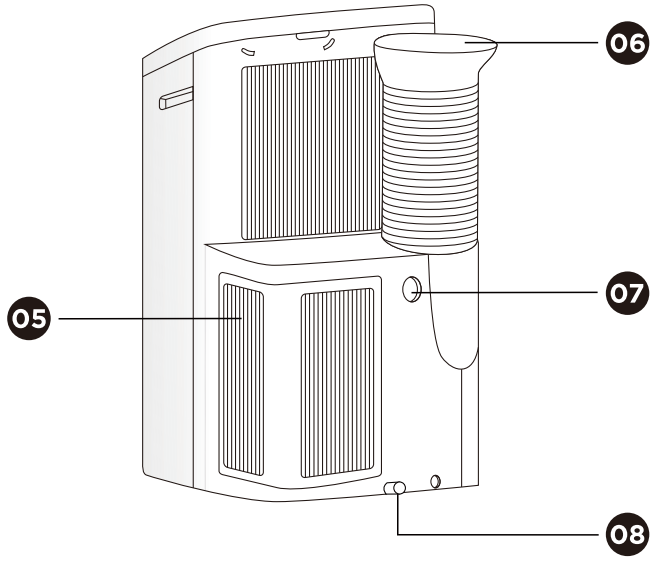


**01 Deflector**

**02 Control Panel**

**03 Handle (both sides)**

**04 Air Inlet Grille**

**05 Air Intake Grille (with Filter)**

**06 Air Outlet Hose**

**07 Middle Condenser Drain**

**08 Condenser Drain**

| PARTS | PARTS NAME | QUANTITY |
|---|---|---|
| 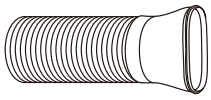 | Exhaust Hose (59" in length, 5.9" in diameter, counterclockwise) and Hose Outlet | 1 set |
|  | Window Panel attached with Screw A | 1 |
|  | Adjustment Panel | 1 |
| 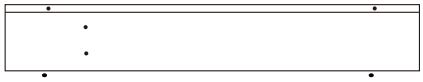 | Extension Panel | 1 |
|  | Screws B | 6 |
| 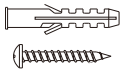 | Expansion Screws C | 4 |
| 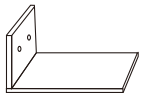 | Bracket | 1 |
| 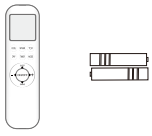 | Remote Control Battery | 1 set |
| 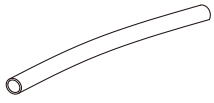 | Drainage Hose (24 inches) | 1 |
| 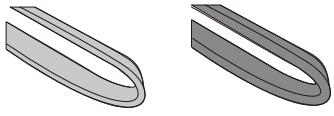 | Foam Seal | 1 set |
|  | Wall Mount Connector and Cover | 1 set |

# INSTALLATION INSTRUCTIONS

## Installation Location

- The air conditioner should be placed on a firm surface to minimize noise and vibration. For safe and secure positioning, place the unit on a smooth, level floor strong enough to support the unit.

  The unit must be installed near a properly rated grounded socket.
- Allow at least 19.7 inches / 50 cm of space away from the wall or window for maximum efficiency.
- Never place any obstacles around the air inlet or outlet of the unit.
- The slope of the floor can't be more than 10 degrees while using the unit. An uneven surface may cause additional noise or vibration, or lead to damage to the unit.

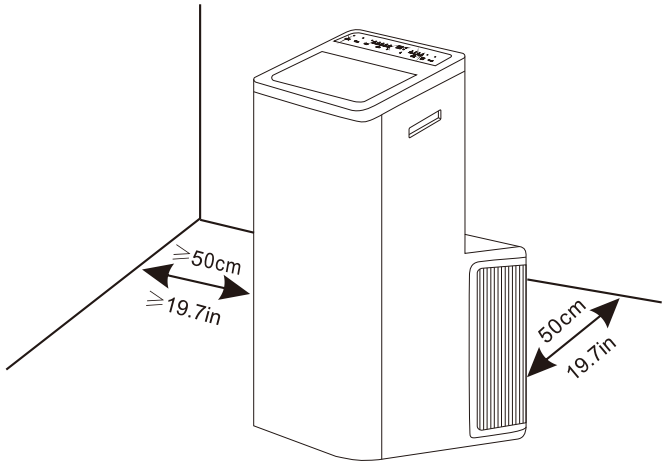


## Tool Suggested

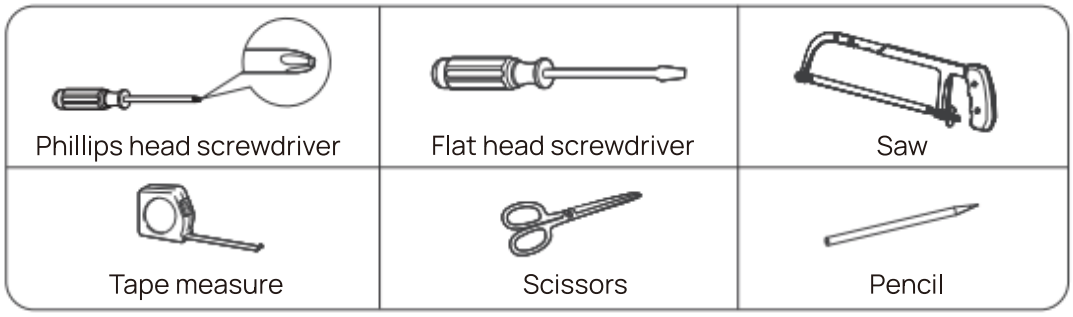


The window panel kit has been designed to fit most standard windows that open vertically or horizontally. However, it may be necessary for you to improvise/modify some aspects of the installation procedures for certain types of windows.

Minimum and maximum window openings: 18-51 Inches

**NOTE:** If the width of your window is smaller than 37 inches, please remove the adjustment panel from the window panel and then cut the window panel (that the exhaust hose inserts to) to make the width of the window panel the same width as your window. Measure twice before cutting.

## Installing Double-Hung Sash/Sliding Casement Windows

**A. Required Parts:**

- Foam Seal
- Window Panel
- Adjustment Panel
- Extension Panel
- Screws A and Screws B
- Bracket (optional)

**B. Assembly:**

a. Cut the foam seal to the proper length and attach it to the window sash.

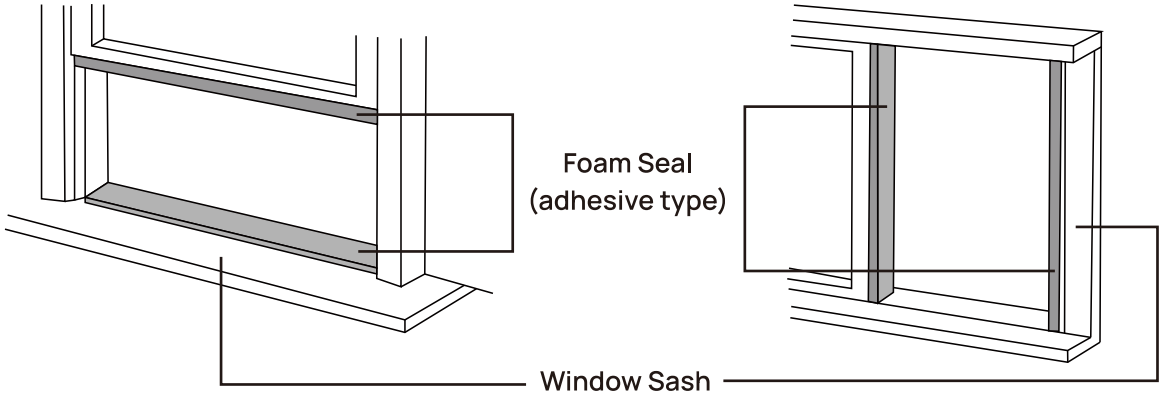


b. Slide the Adjustment Panel into the Window Panel with the Hole and Extension Panel. Install screw A on the window panel and tighten them(don't tighten them completely).

c. Place the assembled window panels on the window sash and adjust until it fully covers the width of your window.

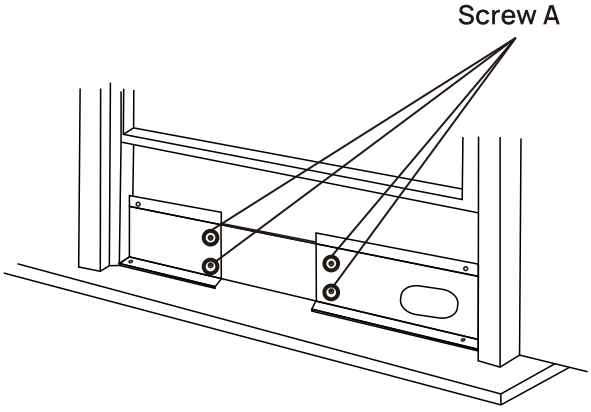


Window width:
51 inches Max./18 inches Min

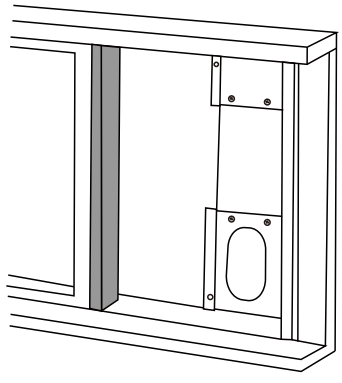

Window width:
51 inches Max./18 inches Min

**NOTE:**

If the width of your window is smaller than 37 inches, please remove the adjustment panel from the window panel and cut the window panel to make the width of the window panel the same width as your window.

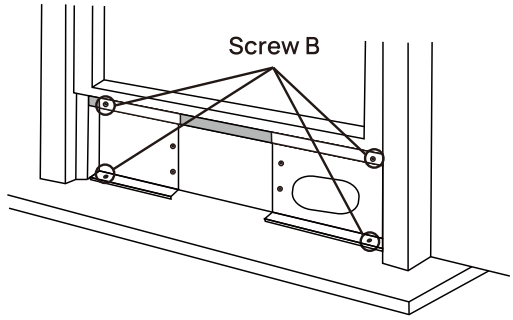


d. Tighten screw A completely to fix the panel kit at the desired width.

e. Close the window securely against the assembled window panel kit.

f. Use the provided screw B to secure the window panel kit.

g. Cut the foam seal to an appropriate length and seal the open gap between the top window sash and the outer window sash.

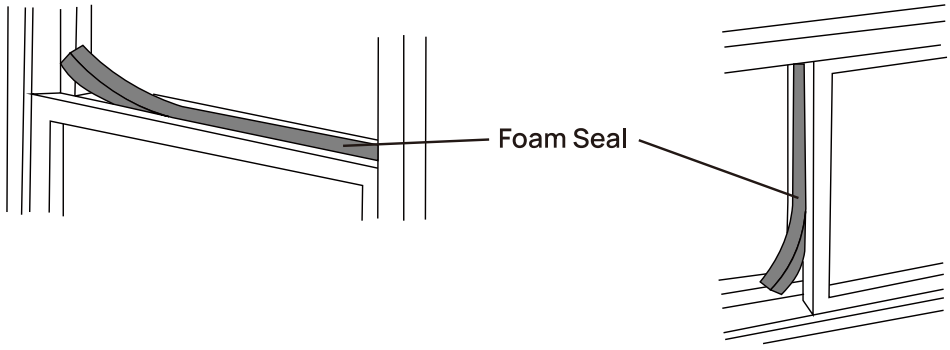


h. [Optional] Attach a bracket to the window frame with screw B to prevent any gaps from opening up.

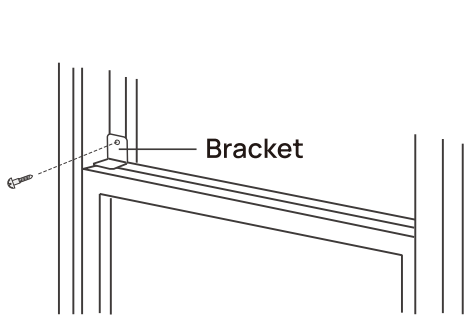


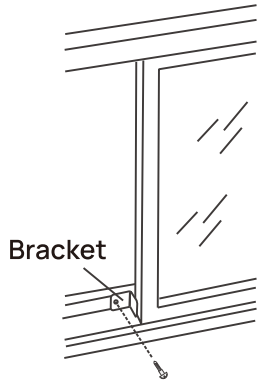


## Installing the Exhaust Hose

**COOL & DRY MODE:** The air exhaust hose should be connected to the portable air conditioner.
**FAN MODE:** The air exhaust hose should be disconnected from the portable air conditioner.

**Window Exhaust**

1. Place the portable air conditioner with the assembled air exhaust hose next to the window and connect the hose outlet to the window.

3. If the air exhaust hose is not installed securely, press it down to the air exhaust grille and ensure it clicks into place.

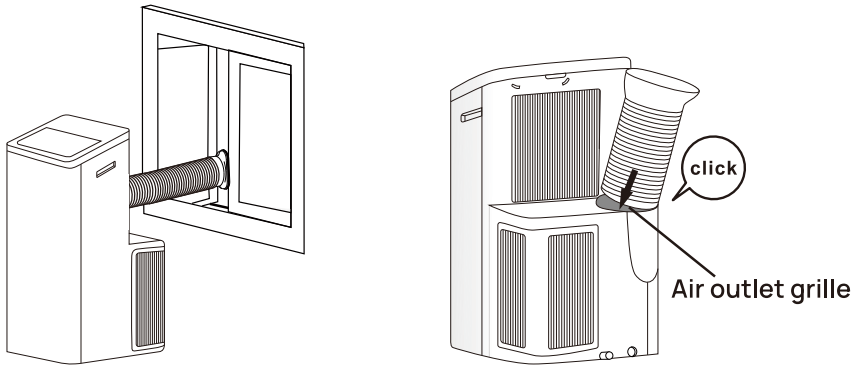


**Wall Exhaust**

You can exhaust the air through the wall if there is no window in the room.

1. Find or drill a hole of 4.7 inches in diameter in the wall.
2. Install the wall mount connection cap onto the wall with 4 expansion screws and screw C.
3. Remove the pre-installed hose outlet and connect the hose to the wall mount connector. Put it into the wall mount connection cap.
4. Close the connection cap when the unit is not in use.

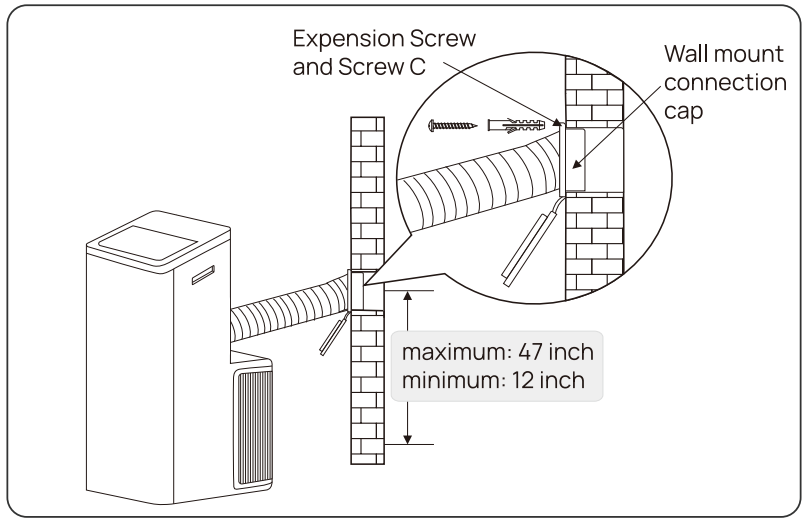


**NOTE:** The air exhaust hose can be compressed or extended, but it is recommended to keep the length to a minimum. Also, make sure that the hose does not have any sharp bends that can obstruct airflow.

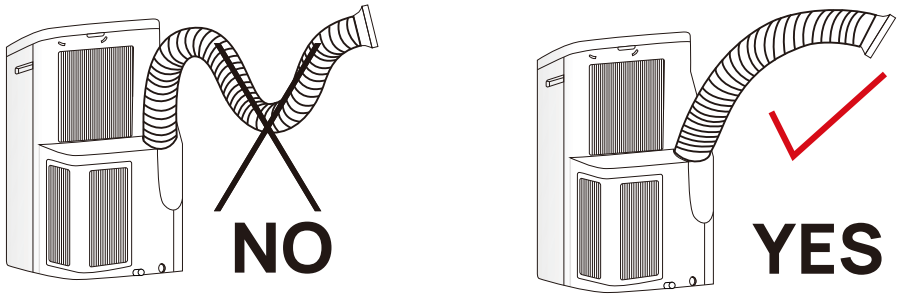

# OPERATING INSTRUCTIONS

## Control Panel

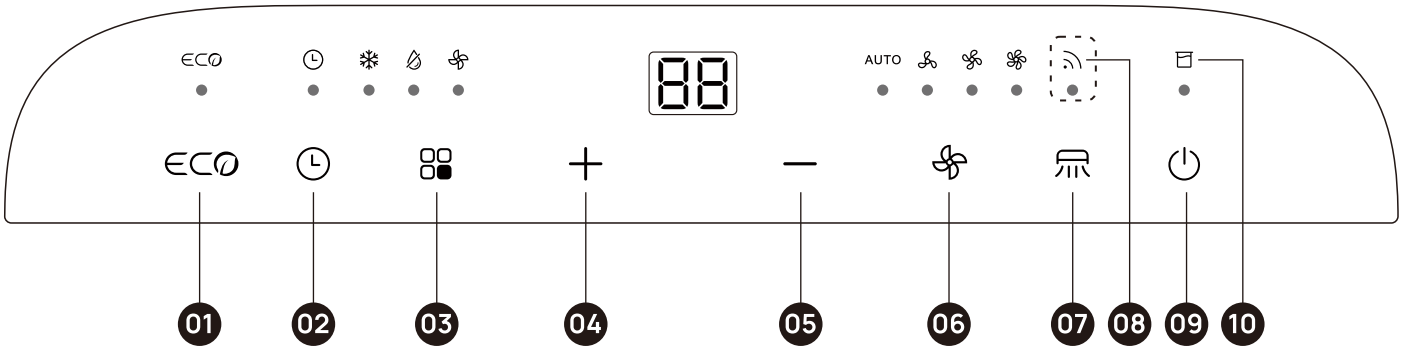


01 ECO Button
02 Timer Button
03 Mode Button
04 Increase Button
05 Decrease Button
06 Fan Speed Button
07 Swing Button
08 WiFi Indicator
09 ON/OFF Button
10 Full Tank Indicator

## Operating from the Control Panel

The control panel enables you to manage all the main functions of the appliance.

**TURNING THE APPLIANCE ON**

- The appliance will be on standby mode after connecting to power.
- Press the ON/OFF Button . The display screen will light up.
- Never turn the air conditioner off by unplugging it from the power source. Always press the ON/OFF Button, then wait a few minutes before unplugging. This allows the appliance to perform a cycle of checks to verify the operation.
- Pressing the Mode Button will cycle through the following modes, as shown below:

COOL ▶ DRY ▶ FAN ▶ AUTO

**COOL MODE**

Ideal for hot muggy weather when you need to cool and dehumidify the room.

- Press the Mode Button until the snowflake indicator lights up.
- Press + or — to select your desired temperature from 60°F-90°F (16°C-32°C).
- Press the Fan Speed Button to select the fan speed.

| | | |
|---|---|---|
| | Low Speed | Operates under low noise. |
| | Medium Speed | To maintain a comfortable temperature with a relatively acceptable noise. |
| | High Speed | To reach the desired temperature as rapidly as possible. |

**Note:** The air conditioner will stop cooling but continue blowing air if the room temperature is lower than the selected temperature.

**DRY MODE**

Ideal for reducing room humidity (spring and autumn, rainy periods, damp rooms, etc).

**Note:** Before using the dry mode, please make sure the air exhaust hose is attached to the appliance to allow moisture to be discharged externally and the drain hose is attached to avoid any leaking. (The Water Drainage Methods will be mentioned later in this manual.)

- Press the Mode Button until the water-drop indicator lights up. The screen will show room temperature.
- In this mode, the unit will run at a low speed and the fan speed cannot be adjusted.

**FAN MODE**

When using this mode, the unit doesn't need to be attached to the air exhaust hose.

- Press the Mode Button until the wind indicator lights up. The screen will show the current room temperature.
- Press the Fan Speed Button to select the fan speed.

| | |
|---|---|
| | Low Speed |
| | Medium Speed |
| | High Speed |

**AUTO MODE**

The unit operates automatically in Cool or Fan Mode and automatically adjusts the fan speed depending on the room temperature.

- Press the Mode Button until the auto indicator AUTO lights up. The screen will show the current room temperature.
- In this mode, the fan speed cannot be adjusted.

## TIMER FUNCTION

This timer can be used to delay the unit start-up or shutdown. This prevents wasting electricity by optimizing operating periods.

### Programming start-up time

- When the unit is off, press the Timer Button and the clock indicator lights up. Press the + or — button to choose the delayed start-up time and wait for about 5 seconds to confirm.
- When the timer is active, the clock indicator will stay on. Press the timer button again to see the countdown time.
- Press the Timer Button twice to cancel the timer. The clock indicator will disappear.

### Programming shut down time

- When the unit is on, press the Timer Button , and the clock indicator lights up. Press the + or — button to choose the delayed shut-down time and wait for about 5 seconds to confirm.
- When the timer is active, the clock indicator will stay on. Press the timer button again to see the countdown time.
- Press the Timer Button twice to cancel the timer. The clock indicator will disappear.

**NOTE:** If you press the Power button to turn on/off the unit, the timer will be canceled.

## ECO FUNCTION

- Press this Button ECO to enter the ECO mode which consumes the least electricity. The unit will stop using this function after 8 hours of operation. This function is only available in COOL mode.
- Changing the mode or turning off the unit will automatically stop the ECO function.

## SWING FUNCTION

- This function is useful for selecting the up/down swing of air circulation.
- Select the operating mode as described above.
- Press the Swing Button to control the deflector to swing automatically or not.

## WIFI INDICATOR

This light indicates the WiFi connection is ready.

## FULL TANK INDICATOR

- When the water level of the bottom tray reaches a predetermined level, the digital display will show “P1” and the indicator will light up.
- Empty the internal tank, following the instructions in the “Water Drainage Methods” later in this manual, for the indicator will disappear.

## TEMPERATURE SCALE CONVERSION

With the unit on, hold the + & — Buttons simultaneously for 3 seconds to switch the unit of temperature between Celsius or Fahrenheit.

## Operating from the AIR.ai App

This model is equipped with a Wi-Fi function. You can use the app to control the air conditioner via an iPhone or Android smartphone from anywhere, even outside of your home.

- Supported wireless routers must work with a 2.4G Hz operating frequency. 5.0 GHz frequency is not supported at this time.
- Standard: IEEE 802.11b/g/n20/n40
- Supported smartphone systems: Android 6.0 -13.0, iOS 11.0 - 17.0

- Before connecting to the unit, please make sure the device is plugged in and in standby mode.
- Then you can connect this device with the AIR.ai app. Please refer to the Quick Guide for the AIR.ai app connection guide.
- If you have difficulty connecting to the Wi-Fi, you can long press the “COOL” and “+” buttons together on the remote control for 5 seconds to reset the Wi-Fi signal. After that, the unit will beep 8 times, then beep twice in 2-second intervals, which means the WiFi has reset.

**Note:**

- The app is only compatible with smartphones and is not available for laptops or tablets.
- The app may not support the latest version of Android or iOS systems because of the test of stability, and may not be compatible with tampered Android or iOS systems.
- Due to different network situations, request time-out could happen, and it is necessary to do network configuration again.
- Due to different network situations, the control process may return time-out (30S-60S).
- All the illustrations in the manual are for explanation purposes only. The latest app may be slightly different.
- The app will continue to be updated with design and content improvements. Check for updates at the Google Play Store or the APP Store.

### Voice Control

You can control this unit via Alexa or Google Assistant. Follow the instructions on the App to connect.

↑↑ Scan the QR code to find the voice commands

## Operating from the Remote Control

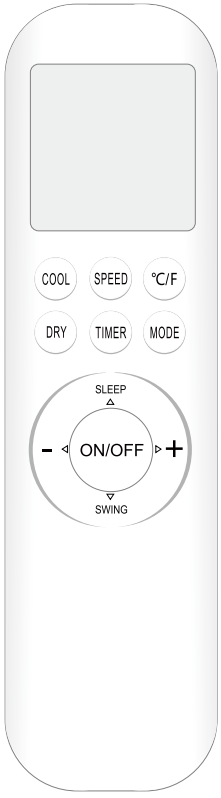


| BUTTONS | FUNCTION |
|---|---|
| COOL | Choose cool mode |
| SPEED | Adjust fan speed |
| DRY | Choose dry mode |
| °C/°F | Temperature Scale Switch |
| TIMER | Switch the timer function on/off |
| MODE | Select the operating mode |
| SLEEP | Switch the sleep mode on/off |
| - | Decrease the set temperature or the time in timer setting |
| + | Increase the set temperature or the time in timer setting |
| ON/OFF | Turn the air conditioner on/off |
| SWING | Adjust the airflow direction |

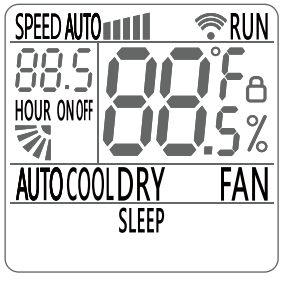


| SYMBOLS | MEANING | SYMBOLS | MEANING |
|---|---|---|---|
| SPEED | Fan speed level | RUN | The unit is running |
| | Signal | | Up/down swing |
| HOUR ON OFF | Timer on/off | | Temperature |
| | Child lock | AUTO | AUTO mode |
| COOL | COOL mode | DRY | DRY mode |
| FAN | FAN mode | SLEEP | SLEEP function |
| SPEED AUTO | Not available for this model | | |

## FUNCTION DESCRIPTION

### ON/OFF Button

Press this button to turn on the unit. Press this button again to turn off the unit.

### MODE Button

Pressing the “MODE” button will cycle through the following modes, as shown below:




### COOL Button

Press this button to enter cool mode.

### DRY Button

Press this button to enter dry mode.

### SPEED Button

Press this button, and you can select the fan speed as follows:

**NOTE:** The fan speed can only be changed under COOL and FAN modes.

### TIMER Button

This timer can be used to delay the unit start-up or shutdown. This avoids wasting electricity by optimizing operating periods.

**Programming start-up**

- When the unit is off, press the “Timer” button and the “ON” icon on the screen will flash. Press the “+” or “-” button to set the desired delayed start-up time. The timer setting increases/decreases by half an hour between 0.5 and 24 hours. Press the “TIMER” button again to confirm.
- When the timer is active, the “ON” icon will appear on the remote control.
- After the timer setting, you can continue to set your desired mode and temperature.
- If you press the timer button again the timer will be canceled and the “ON” icon will disappear.

**Programming shut down**

- When the unit is on, press the “Timer” button and the “OFF” icon on the screen will flash. Press the “+” or “-” button to set the desired delayed shut-down time. The timer setting increases/decreases by half an hour between 0.5 and 24 hours. Press the “TIMER” button again to confirm.
- When the timer is active, “OFF” will appear on the remote control.
- If you press the timer button again the timer will be canceled and the “OFF” icon will disappear.

### SWING Button

This function is for adjusting the up/down direction of air circulation.

**SLEEP Function**

This function can be used at night as it maintains the room at optimum temperature at a lower noise level without excessive fluctuations in either temperature or humidity.

**NOTE:**

- This function can only be used in Cool Mode.
- In this mode, the fan speed is always low.
- Press the Sleep Button on the remote and then the symbol will appear on the display screen. The unit operates in the previously selected mode, the screen will reduce brightness, and the fan will switch to low speed.

## USING THE REMOTE CONTROL

The maximum range of the remote control is 23 feet / 7 meters away from the appliance (without obstacles between the remote control and the receiver).

The remote control must be handled with care. Do not drop it or expose it to direct sunlight or sources of heat. If the remote control does not work, please take out the battery, and put it back to try again.




## INSERTING OR REPLACING THE BATTERIES

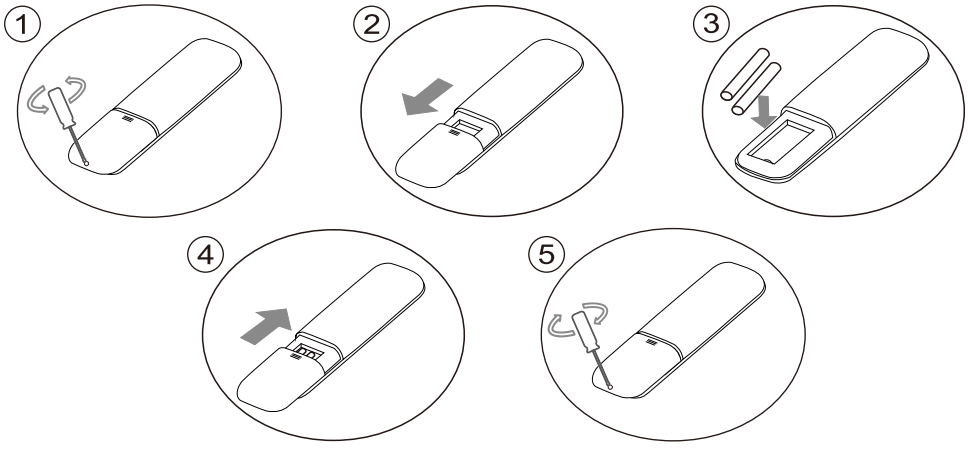


- Use the screwdriver to remove the cover on the rear of the remote control.
- Insert two "AAA" 1.5V batteries in the correct position (see instructions inside the battery compartment).
- Tighten the screws back firmly.

**Note:**

- If the remote control does not work normally, remove the batteries for 30 seconds before reinstalling them. If that doesn't work, replace the batteries.
- If the remote control is replaced or disposed of, the batteries must be removed and discarded in accordance with current legislation as they are harmful to the environment.
- Do not mix old and new batteries. Do not mix alkaline, standard (carbon-zinc) or rechargeable (nickel-cadmium) batteries.
- Do not dispose of batteries in a fire. Batteries may explode or leak.
- Remove the batteries if the remote control won't be used for a long time.

## Self-Diagnosis

The unit has a self-diagnosis system to identify some malfunctions. Error messages will be displayed on the display screen.

| IF IS DISPLAYED | WHAT DOES IT MEAN? | WHAT SHOULD I DO? |
|---|---|---|
| P1 | The internal safety tank is full. | Empty the internal safety tank, following the instructions in the “Water Drainage Methods”. |
| L9, F4, E1, E2, E3, E4, FE | Temperature sensor error | Contact TURBRO customer team |
| L0, F0 | Motor failure | |
| F1 | Module protection error | |
| L1 | Compressor overcurrent protection | |
| L2, F3 | Compressor error | |
| P7 | Anti-freezing protection | |
| E8 | Communication fault between display board and PCB board | |

## Water Drainage Methods

TURBRO portable air conditioner comes with an auto-evaporation system. The unit can automatically evaporate the condensated water. There is no need to empty the water except in humid conditions. When you run the dry mode, then it’s required to install the hose as the unit might pull more water from the air.

When the water tank is full of water, the unit stops running and will show “ P1 ”. The compressor and fan won’t restart until the water tank has been drained.

There are 2 ways to remove collected water from the air conditioner.

**Method A: Manual Drainage**

a. Unplug the unit from power source.

b. Place a receptacle pan (does not include) under the lower drain port.

c. Remove the cap from the lower drain port and allow the water to flow into the pan. Your pan may not hold the full contents of the water tank. A number of fills of your pans may be required.

d. Tilt the unit by lifting it slightly upwards from the front until no more water drains from the outlet.

e. After the water is drained, firmly replace the cap on the lower drain.

f. Restart the air conditioner by pressing the power button. Ensure that the unit is in COOL or DRY mode. The compressor will start approximately 3 minutes after the unit is turned on.

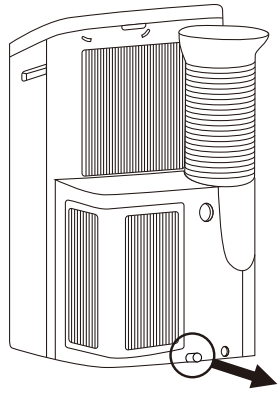

**NOTE:** Please be sure that the drain hose does not run higher than the drain outlet or the water tank will not drain. The drain hose works by gravity, so it cannot remove water if the hose slopes above the drain port.

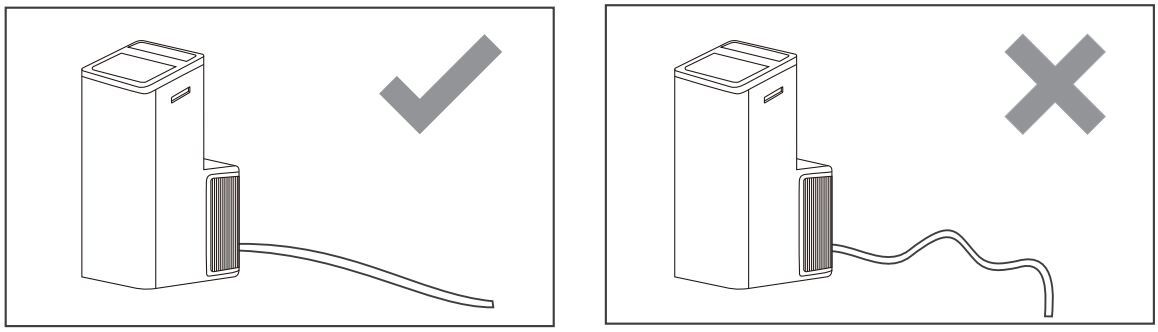

**Method B: Continuous Draining**

a. Unplug the unit from power source.

b. Remove the cap from the lower or middle drain port. During this step, some residual water may split so place a receptacle pan (not included) under the drain port to collect water.

c. Insert the drain hose into the drain port. The water can be continuously drained through the hose to the floor or a bucket.

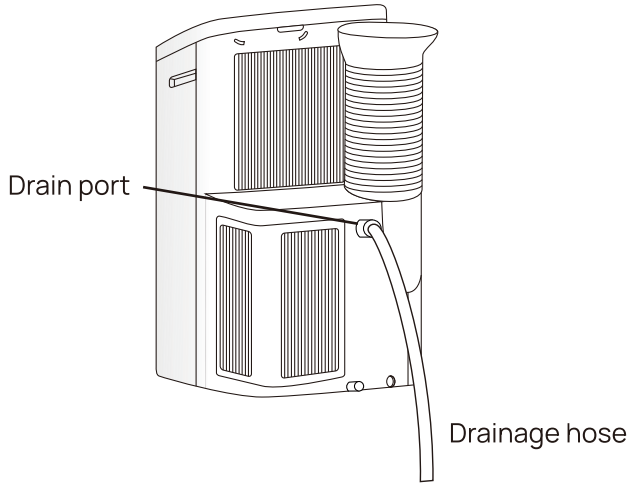


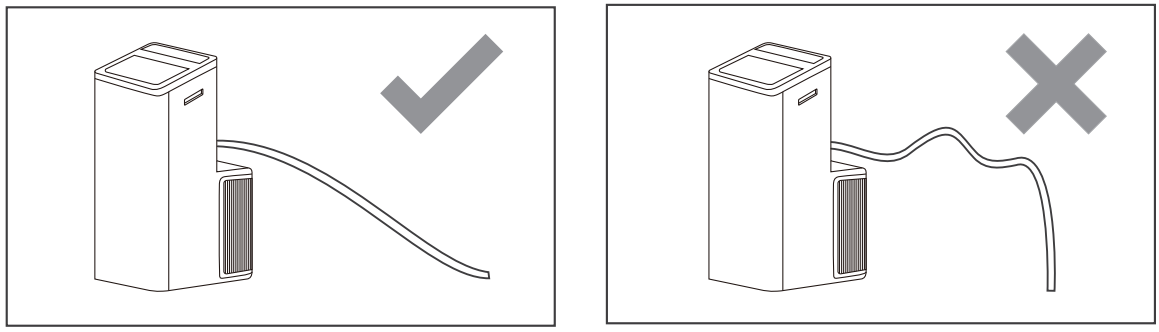

**NOTE:** Please be sure that the height of the drain hose is not higher than the drain outlet, or the water tank may not drain.

## Tips for Correct Use

Follow these tips to get the best performance of your appliance:

- Close the windows and doors in the room to be cooling. When installing the appliance semi-permanently, you should leave a door slightly open (as little as 0.4 inches / 1 cm) to guarantee correct ventilation.
- Close the windows and doors in the room to be cooled. Protect the room from direct exposure to the sun by partially closing the curtains and blinds to make the appliance run more efficiently.
- Never set or rest objects of any kind on the appliance.
- Do not block the air inlet or outlet of the appliance. Reduced airflow will result in poor performance and could damage the unit.
- Make sure there are no heat sources in the room.
- Never use the appliance in very damp rooms (for example laundries).
- Never use the appliance outdoors.
- Make sure the appliance is standing on a level surface.

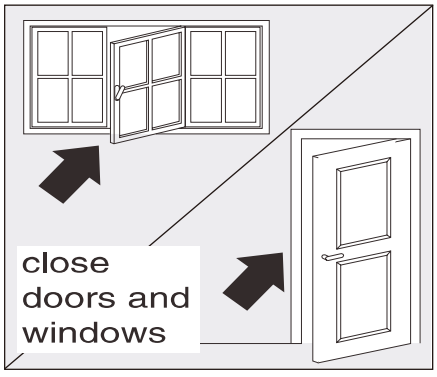


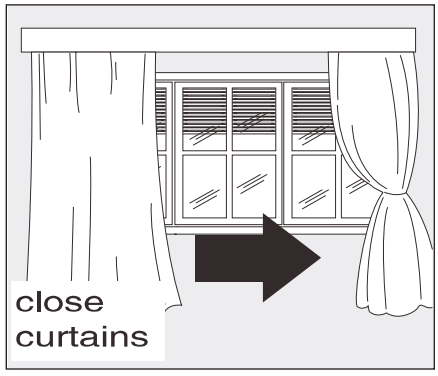


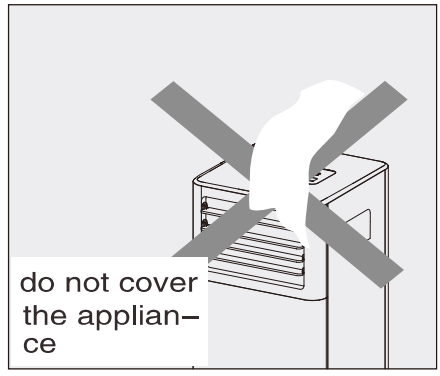


# CLEANING

Before cleaning or maintenance, turn the appliance off and wait for a few minutes, then unplug from the electrical outlet.

## Cleaning the Outer Case

You should clean the appliance with a slightly damp cloth then dry with a dry cloth.

- Never wash the appliance with water. It could be dangerous.
- Never use petrol, alcohol or solvents to clean the appliance.
- Never spray insecticide liquids or similar.

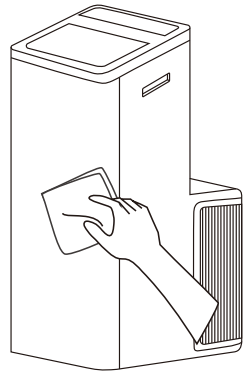

## Cleaning the Air Filters

You should clean the filter every three months to keep your appliance working efficiently.

- The upper filter can be removed as shown in the picture below.
- Unscrew the lower air outlet grille and remove it. Remove the filter from the grille.
- Rinse the filter under running water.
- After the filter has dried completely, replace it into the air conditioner and tighten the screws.

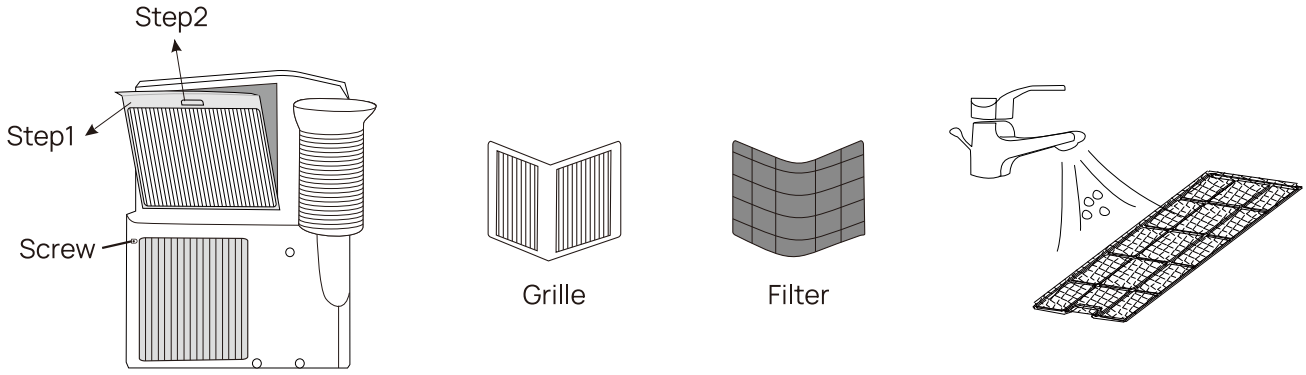


**NOTE:**

- Do not touch the metal fins in the air conditioner after removing the filter, as they may cause personal injury.
- Do not attempt to dry the filter with a hairdryer or other heating elements as this may deform or ignite the filter.
- Do not operate the air conditioner if the filter is missing.

## Maintenance Checklists

**Pre-Season Maintenance Checklist**

- Check the power cord for any cuts or exposed wiring.
- Check the ground prong is still on your power plug.
- Clean the air filter.
- Check whether the hose adapters and exhaust hose are installed tightly and free of damage.

**Post-Season Maintenance Checklist**

- Disconnect unit from the power outlet.
- Clean air filter and exterior case.
- Drain any accumulated water from the air conditioner.
- Wrap the air conditioner in plastic to prevent the accumulation of dust.

**Long-Term Storage Checklist**

- Disconnect unit from the power outlet.
- Clean air filter and exterior case.
- Wrap and/or cover the unit to prevent the accumulation of dust within the unit.
- Do not attempt to dry the filter with a hairdryer or other heating elements as this may deform or ignite the filter.
- Do not operate the air conditioner if the air filter is missing.

# TROUBLESHOOTING

Troubleshoot your problem by using the chart below. If the air conditioner still does not work properly, please contact TURBRO customer team via **support@turbro.com**.

| ISSUE | POSSIBLE CAUSE | POSSIBLE REMEDY |
|---|---|---|
| Does not start when pressing the power button | Didn't plug into the electrical outlet. | A. Plug into the required wall outlet.<br>B. Wait for 30 minutes, if the problem can't be solved, contact the TURBRO customer service team. |
| Unit stops running | A. The room temperature is lower than the set temperature (cooling mode).<br>B. "P1" appears on the display screen.<br>C. The unit is defrosting. | A. Reset the temperature.<br>B. Drain the water tank (Refer to "Water Drainage Methods".<br>C. After defrosting is finished, the unit will resume operation. |
| No air is blowing from the air conditioner | A.The air exhaust hose is bent.<br>B. Air outlet/inlet is blocked. | A. Position the air exhaust hose correctly and avoid any sharp bends and sags.<br>B. Remove any obstacles blocking the air outlet/inlet. |
| Not cool enough | A. The windows, doors and/or curtains are not closed.<br>B. There are heat sources inside the room (oven, hairdryer, etc.)<br>C. The air exhaust hose is not connected or blocked.<br>D. The temperature is set too high.<br>E. Air filter is blocked by dust.<br>F. The unit will take about 4 minutes of operation before cooling occurs. | A. Make sure all the doors, windows, and curtains are closed (Refer to "Tips for Correct Use").<br>B. Remove the heat sources if possible.<br>C. Connect the air exhaust hose and make sure it can function properly (Refer to "Installing the Exhaust Hose").<br>D. Set a lower temperature.<br>E. Clean the air filter (Refer to "Cleaning the Air Filters")<br>F. Wait for 4 minutes until the compressor safety device delayed process has passed. |
| Noisy or vibration | The unit is placed on an unlevel surface. | Place the unit on a flat, level surface if possible. |
| Produces gurgling sound | Has the unit just been turned on or off? | The flowing water sound is the refrigerant inside the air conditioner, which is completely normal. |
| Produces an unpleasant smell | Air filter is clogged. | Clean the air filter (Refer to "Cleaning the Air Filters"). |

| ISSUE | POSSIBLE CAUSE | POSSIBLE REMEDY |
|---|---|---|
| P1 displays on the screen | The unit has a self-diagnosis system to identify malfunctions. | Refer to the “Self-Diagnosis”. |

If you notice or experience any of the following conditions, please turn off the air conditioner, disconnect from power, discontinue use, and contact support immediately.

- The power cord is overheating or otherwise damaged
- Abnormal sound during operation
- A strange odor is emitted from the unit
- Excessive water leakage in the unit

Do not attempt to repair or retrofit the air conditioner by yourself. All repairs must be performed by qualified individuals.

# WARRANTY & CUSTOMER SUPPORT

## Warranty

TURBRO provides a 1-year limited warranty for TURBRO products from the date of purchase, subject to the following conditions and limitations outlined below.

**What is covered?**

- This warranty is limited to the repair or replacement of part(s) proved to be defective in material or workmanship, after said defect is confirmed by the manufacturer's inspection.
- The manufacturer may, at its discretion, fully discharge all obligations with respect to this warranty by refunding the wholesale price of the defective part(s).

**What is not covered?**

- Damage caused by the owner when attempting to fix or alter the product themselves.
- Damage caused by misuse, abuse, neglect, alterations, or unauthorized repair.
- Natural depreciation.
- Any alteration misuse of the product will nullify this warranty.
- This warranty is non-transferable, which is effective for the original buyer from the authorized seller only.

**How to request warranty services?**

- To obtain the benefit of this warranty, please leave a message online (**www.turbro.com/contact**), or send an email to **support@turbro.com**.

**What will TURBRO do?**

- Repair the item.
- Replace the item if not repairable.
- Refund the item under certain circumstances.

## Customer Support

### We are here to help anytime!

Any problems, write to us via support@turbro.com. We will get back to you within 1 business day.

TURBRO

www.turbro.com

## FCC Caution

This device complies with part 15 of the FCC Rules. Operation is subject to the following two conditions:

(1) This device may not cause harmful interference, and (2) this device must accept any interference received, including interference that may cause undesired operation.

Any Changes or modifications not expressly approved by the party responsible for compliance could void the user's authority to operate the equipment.

**Note:** This equipment has been tested and found to comply with the limits for a Class B digital device, pursuant to part 15 of the FCC Rules. These limits are designed to provide reasonable protection against harmful interference in a residential installation. This equipment generates uses and can radiate radio frequency energy and, if not installed and used in accordance with the instructions, may cause harmful interference to radio communications. However, there is no guarantee that interference will not occur in a particular installation. If this equipment does cause harmful interference to radio or television reception, which can be determined by turning the equipment off and on, the user is encouraged to try to correct the interference by one or more of the following measures:

- Reorient or relocate the receiving antenna.
- Increase the separation between the equipment and receiver.
- Connect the equipment into an outlet on a circuit different from that to which the receiver is connected.
- Consult the dealer or an experienced radio/TV technician for help.

TURBRO

© Katmai Technology Limited

support@turbro.com
www.turbro.com
(323) 438-3334

MADE IN CHINA

PAP 22