Form No. 3484-162 Rev A

TORO®

Count on it.

Operator's Manual

Flex-Force Power System® 60V MAX Snowthrower

Model No. 39901—Serial No. 418000000 and Up
Model No. 39901T—Serial No. 418000000 and Up
Model No. 39902—Serial No. 418000000 and Up

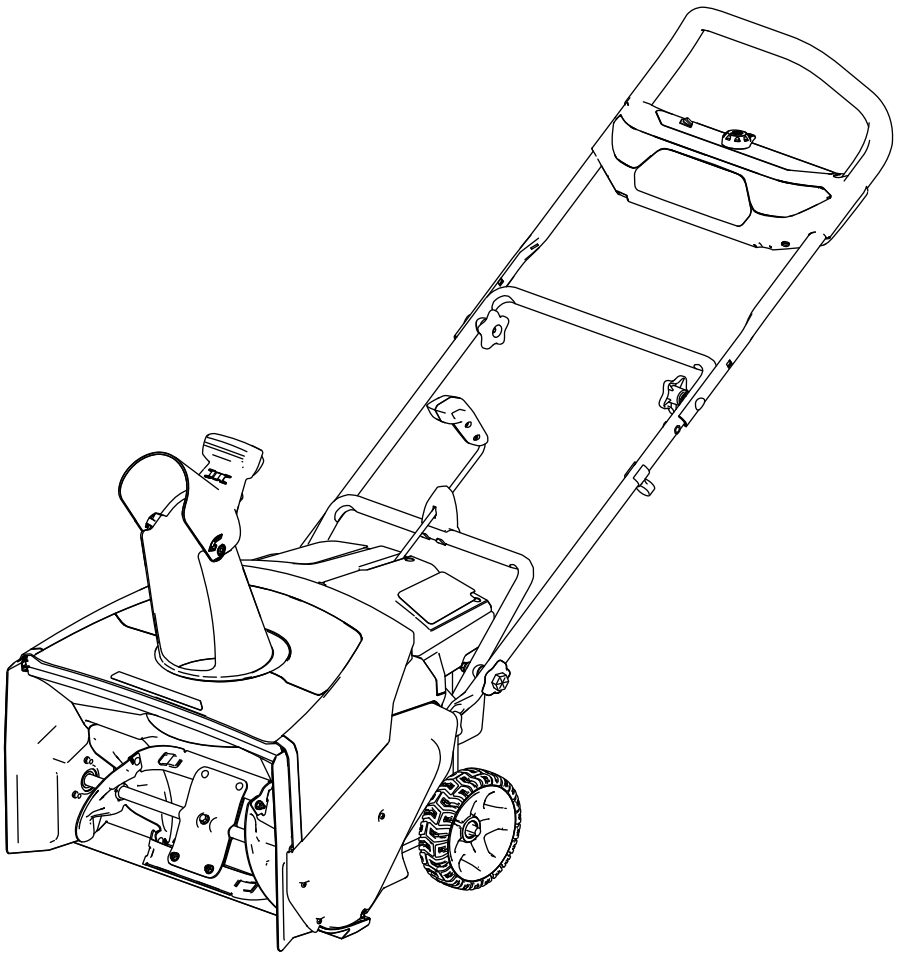

Register at www.Toro.com.
Original Instructions (EN)

3484-162

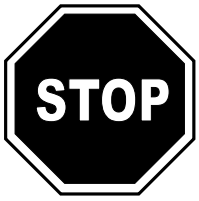

For assistance, please see www.Toro.com/support for instructional resources or contact your Authorized Service Dealer before returning this product.

⚠ WARNING

CALIFORNIA
Proposition 65 Warning

The power cord on this product contains lead, a chemical known to the State of California to cause birth defects or other reproductive harm. Wash hands after handling.

Use of this product may cause exposure to chemicals known to the State of California to cause cancer, birth defects, or other reproductive harm.

Introduction

This machine is intended to be used by residential homeowners. It is designed for removing up to 30 cm (12 inches) of snow from patios, sidewalks, and small driveways. It is not designed for removing materials other than snow, nor is it designed for clearing off gravel surfaces. It is designed to use Flex-Force 60V lithium-ion battery packs. These battery packs are designed to be charged only by Flex-Force 60V lithium-ion battery chargers. Using this product for purposes other than its intended use could prove dangerous to you and bystanders.

Model 39901T does not include a battery or a charger.

Read this information carefully to learn how to operate and maintain your product properly and to avoid injury and product damage. You are responsible for operating the product properly and safely.

Visit www.Toro.com for more information, including safety tips, training materials, accessory information, help finding a dealer, or to register your product.

Whenever you need service, genuine Toro parts, or additional information, contact an Authorized Service Dealer or Toro Customer Service and have the model and serial numbers of your product ready. Figure 1 identifies the location of the model and serial numbers on the product. Write the numbers in the space provided.

Important: **With your mobile device, you can scan the QR code (if equipped) on the serial number plate to access warranty, parts, and other product information.**

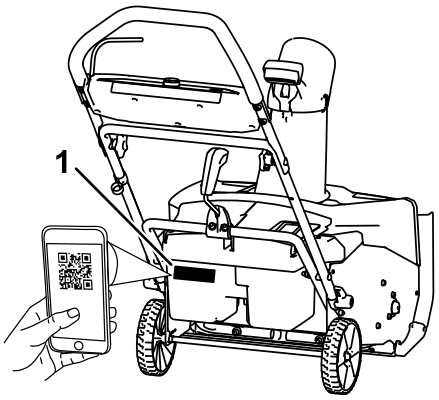

g427629

Figure 1

1. Model number, serial number, and QR code location

Model No. _____

Serial No. _____

© 2026—The Toro® Company
8111 Lyndale Avenue South
Bloomington, MN 55420

Contact us at www.Toro.com.
Printed in Mexico
All Rights Reserved

Safety-Alert Symbol

The safety-alert symbol (Figure 2) shown in this manual and on the machine identifies important safety messages that you must follow to prevent accidents.



g000502

Figure 2
Safety-alert symbol

The safety-alert symbol appears above information that alerts you to unsafe actions or situations and is followed by the word **DANGER**, **WARNING**, or **CAUTION**.

DANGER indicates an imminently hazardous situation which, if not avoided, **will** result in death or serious injury.

WARNING indicates a potentially hazardous situation which, if not avoided, **could** result in death or serious injury.

CAUTION indicates a potentially hazardous situation which, if not avoided, **may** result in minor or moderate injury.

This manual uses two other words to highlight information. **Important** calls attention to special mechanical information and **Note** emphasizes general information worthy of special attention.

Safety

IMPORTANT SAFETY INSTRUCTIONS

⚠ WARNING

When using an electric machine, always read and follow basic safety warnings and instructions to reduce the risk of fire, electric shock, or injury, including the following:

Read All Instructions

I. Training

1. The operator of the machine is responsible for any accidents or hazards occurring to others or their property.
2. Read and understand the contents of this *Operator's Manual* before you start the machine. Ensure that everyone using this machine knows how to use it, knows how to shut it off quickly, and understands the warnings.
3. Do not allow children to use or play with the machine, battery pack, or the battery charger; local regulations may restrict the age of the operator.
4. Do not allow children or untrained people to operate or service this device. Allow only people who are responsible, trained, familiar with the instructions, and physically capable to operate or service the device.
5. Before using the machine, battery pack, and battery charger, read all the instructions and cautionary markings on these products.
6. Become familiar with the controls and proper use of the machine, battery pack, and battery charger.

II. Preparation

1. Keep bystanders and children out of the operating area.
2. Never allow children to operate the machine.
3. Do not operate the machine without all guards and other safety devices in place and functioning properly on the machine.
4. Inspect the area where you will use the machine and remove all objects that could interfere with the operation of the machine or that the machine could throw.
5. Use only the battery pack specified by Toro. Using other accessories and attachments may increase the risk of injury and fire.
6. Plugging the battery charger into an outlet that is not 120 V can cause a fire or electric shock. Do not plug the battery charger into an outlet other than 120 V.
7. Do not use a damaged or modified battery pack or battery charger, which may exhibit unpredictable behavior that results in fire, explosion, or risk of injury.
8. If the supply cord to the battery charger is damaged, contact an Authorized Service Dealer to replace it.
9. Charge the battery pack with only the battery charger specified by Toro. A charger suitable for 1 type of battery pack may create a risk of fire when used with another battery pack.
10. Charge the battery pack in a well-ventilated area only.
11. Follow all charging instructions and do not charge the battery pack outside of the temperature range specified in the instructions. Otherwise, you may damage the battery pack and increase the risk of fire.
12. Dress properly—Wear appropriate clothing, including eye protection; long pants or trousers; substantial, slip-resistant rubber boots; and hearing protection. Tie back long hair and do not wear loose clothing or loose jewelry that can get caught in moving parts.

III. Operation

1. Contact with the moving rotor will cause serious injury. Keep your hands and feet away from all moving parts of the machine. Keep clear of any discharge opening.
2. Stay behind the handles and away from the discharge opening while operating the machine.
3. Using this machine for purposes other than its intended use could prove dangerous to you and bystanders.
4. Prevent unintentional starting—Ensure that the electric-start button is removed from the machine before connecting the battery pack and handling the machine.
5. Use your full attention while operating the machine. Do not engage in any activity that causes distractions; otherwise, injury or property damage may occur.
6. Shut off the machine, remove the electric-start button, remove the battery pack from the machine, and wait for all movement to stop before adjusting, servicing, cleaning, or storing the machine.
7. Remove the battery pack and electric-start button from the machine whenever you leave it unattended or before changing accessories.
8. Do not force the machine—Allow the machine to do the job better and safer at the rate for which it was designed.
9. Stay alert—Watch what you are doing and use common sense when operating the machine. Do not use the machine while ill, tired, or under the influence of alcohol or drugs.
10. Operate the machine only in good visibility and appropriate weather conditions.
11. Use extreme caution when reversing or pulling the machine toward you.
12. Keep proper footing and balance at all times, especially on slopes. Use extreme caution when changing directions on slopes. Do not operate the machine on exceedingly steep slopes. Walk, never run with the machine.
13. When not actively clearing snow, disengage power to the auger.
14. Do not use the machine on a gravel surface.
15. Do not direct the discharge material toward anyone. Avoid discharging material against a wall or obstruction; material may ricochet toward you. Shut off the machine when crossing gravel surfaces.
16. Exercise extreme caution when operating the machine on or crossing drives, walks, or roads. Stay alert for hidden hazards or traffic.

17. If the machine strikes an object or starts to vibrate, immediately shut off the machine, remove the electric-start button, remove the battery pack, and wait for all movement to stop before examining the machine for damage. Make all necessary repairs before resuming operation.
18. Shut off the machine whenever you leave the operating position for any reason.
19. Shut off the machine and remove the electric-start button before unclogging the machine and always use a stick or a cleanout tool to remove the clog.
20. Shut off the machine, remove the electric-start button, and remove the battery pack(s) from the machine before loading the machine for hauling.
21. Never operate the machine at high transport speeds on slippery surfaces.
22. Under abusive conditions, the battery pack may eject liquid; avoid contact. If you accidently come into contact with the liquid, flush with water. If the liquid contacts your eyes, seek medical help. Liquid ejected from the battery pack may cause irritation or burns.
23. Do not expose a battery pack or tool to fire or excessive temperature. Exposure to fire or temperature above 130°C (265°F) may cause explosion.
24. CAUTION—A mistreated battery pack may present a risk of fire, explosion, or chemical burn.
    - Do not disassemble the battery pack.
    - Replace the battery pack with a genuine Toro battery pack only; using another type of battery pack may cause a fire or risk of injury.
    - Keep battery packs out of the reach of children and in the original packaging until you are ready to use them.

IV. Maintenance and Storage

1. Shut off the machine, wait for all moving parts to stop, remove the electric-start button, and remove the battery pack(s) from the machine before adjusting, servicing, cleaning, or storing the machine.
2. Do not attempt to repair the machine except as indicated in the instructions. Have an Authorized Service Dealer perform service on the machine using identical replacement parts.
3. Wear gloves and eye protection when servicing the machine.
4. When servicing the rotor, be aware that the rotor can still move even though the power source is off.
5. For best performance, use only genuine Toro replacement parts and accessories. Other replacement parts and accessories could be dangerous, and such use could void the product warranty.
6. Maintain the machine—Keep handles dry, clean, and free from oil and grease. Keep guards in place and in working order. Use identical replacement parts only.
7. Check all fasteners at frequent intervals for proper tightness to ensure that the machine is in safe working condition.
8. Check the machine for damaged parts. Check for misaligned and binding moving parts, broken parts, mounting, and any other condition that may affect its operation. Unless indicated in the instructions, have an Authorized Service Dealer repair or replace a damaged guard or part.
9. When the battery pack is not in use, keep it away from metal objects such as paper clips, coins, keys, nails, and screws that can make a connection from 1 terminal to another. Shorting the battery terminals may cause burns or a fire.
10. When you are not using the machine, store it indoors in a dry, secure place out of the reach of children.
11. When storing the machine for more than 30 days, refer to Storage (page 20) for important information.

SAVE THESE INSTRUCTIONS

Safety and Instructional Decals

Safety decals and instructions are easily visible to the operator and are located near any area of potential danger. Replace any decal that is damaged or missing.



decal147-9420

147-9420



decal138-6697

138-6697

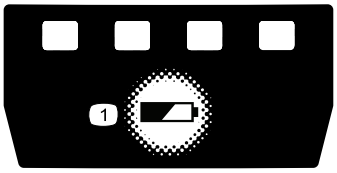

decal161-3764

161-3764

1. Battery charge status

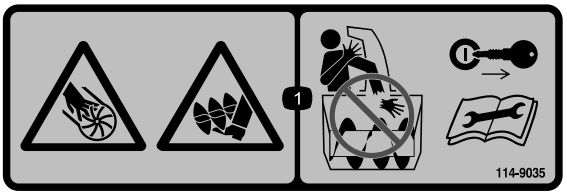

decal114-9035

114-9035

1. Cutting/dismemberment hazard of hand, impeller; cutting/dismemberment hazard of foot, auger—do not place your hand in the chute; remove the key and read the *Operator's Manual* before performing maintenance.



decal139-5242

139-5242



decal139-5243

139-5243



decal161-7114

161-7114

1. Read the *Operator's Manual*.
2. Recycle the battery
3. Do not dispose improperly



decal161-7130

161-7130

1. Read the *Operator's Manual*.
2. High energy battery recycling program
3. Do not dispose improperly



decal163-7685

163-7685

1. Read the *Operator's Manual*.
2. Do not dispose improperly.



decal163-7686

163-7686

1. Read the *Operator's Manual*.
2. High energy battery recycling program
3. Do not dispose improperly



decal161-7132

161-7132



decal161-3774

161-3774



decal161-3775

161-3775

1. The battery pack is charging.
2. The battery pack is fully charged.
3. The battery pack is over or under the appropriate temperature range.
4. Battery pack charging fault

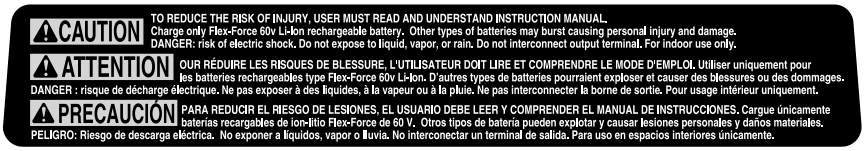

decal161-3788

161-3788

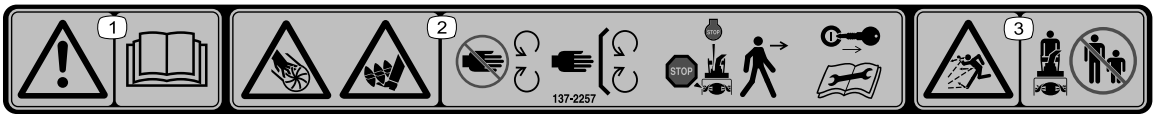

decal137-2257

137-2257

1. Warning—read the *Operator's Manual*.
2. Cutting/dismemberment of hand hazard, impeller; cutting/entanglement of foot hazard, auger—stay away from moving parts; keep all guards and shields in place; shut off the engine and remove the key before leaving the machine; read the *Operator's Manual* before performing maintenance.
3. Thrown object hazard—keep bystanders away.

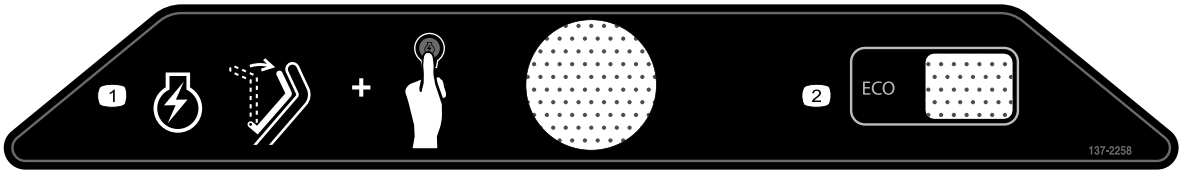

decal137-2258

137-2258

1. To start the motor, bring the bail to the handle and press the ignition button.
2. ECO

Setup

Loose Parts

Use the chart below to verify that all parts have been shipped.

Procedure	Description	Qty.	Use
1	Mounting hardware (not included)	2	Mount the battery charger (optional).
2	No parts required	–	Unfold the handle.
3	Chute deflector	1	Install the chute deflector.
4	Chute-control rod	1	Install the chute-control rod.

Important: **The battery pack is not fully charged when you purchase it. Before using the machine for the first time, refer to** **Charging the Battery Pack (page 17)****.**

1

Mounting the Battery Charger (Optional)

Parts needed for this procedure:

2	Mounting hardware (not included)

Procedure

If desired, mount the battery charger securely on a wall using the wall-mount key holes on the back of the charger.

Mount it indoors (such as a garage or other dry place), near a power outlet, and out of the reach of children.

Refer to Figure 3 for assistance in mounting the charger.

Slide the charger over the appropriately positioned hardware to secure the charger in place (hardware not included).

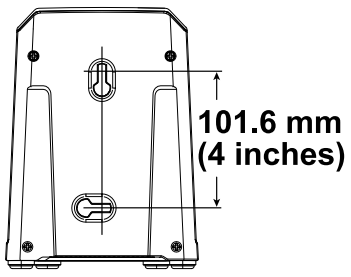

g290534

Figure 3

2

Unfolding the Handle

No Parts Required

Procedure

1. Remove the machine from the box.
2. Unfold the upper handle and allow the upper handle knobs to snap into place (A of Figure 4).
3. Tighten the handle knobs (B of Figure 4).

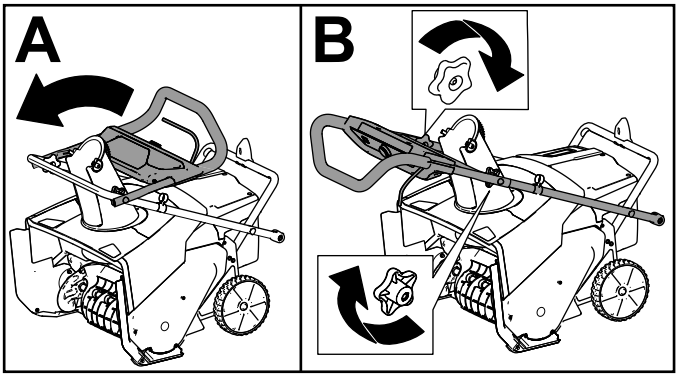

g282574

Figure 4

4. Remove the lower handle knobs from both sides of the machine (Figure 5).

   Note: The lower knobs are installed to a weld nut in the side of the machine.

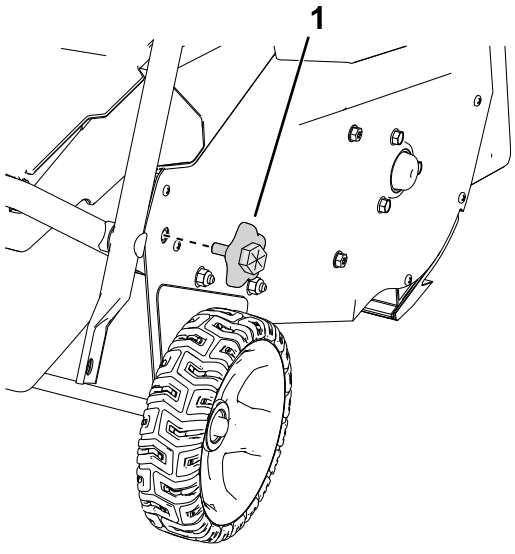

g303594

Figure 5

Right side shown

1. Lower handle knob

5. Move the lower handle into place and install the lower handle knobs as shown in Figure 6.

   Note: You may use a wrench on the hex on the outside of the knob to tighten the knob.

   Important: **Tighten the knobs until the handlebar touches the side plate with no gap.**

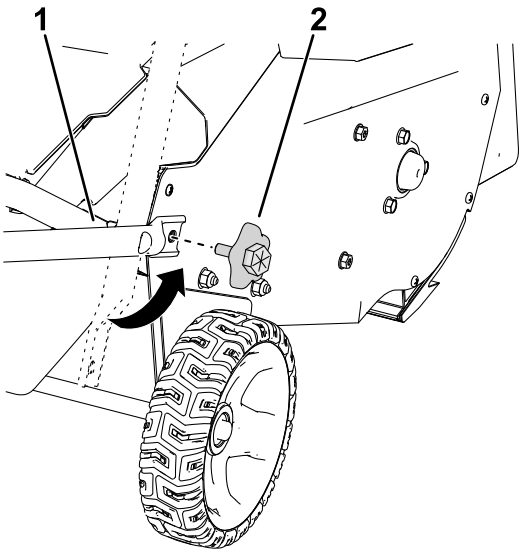

g303595

Figure 6

1. Align the lower handle with the weld nuts.
2. Install the lower handle knobs.

3

Installing the Chute Deflector

Parts needed for this procedure:

1	Chute deflector

Procedure

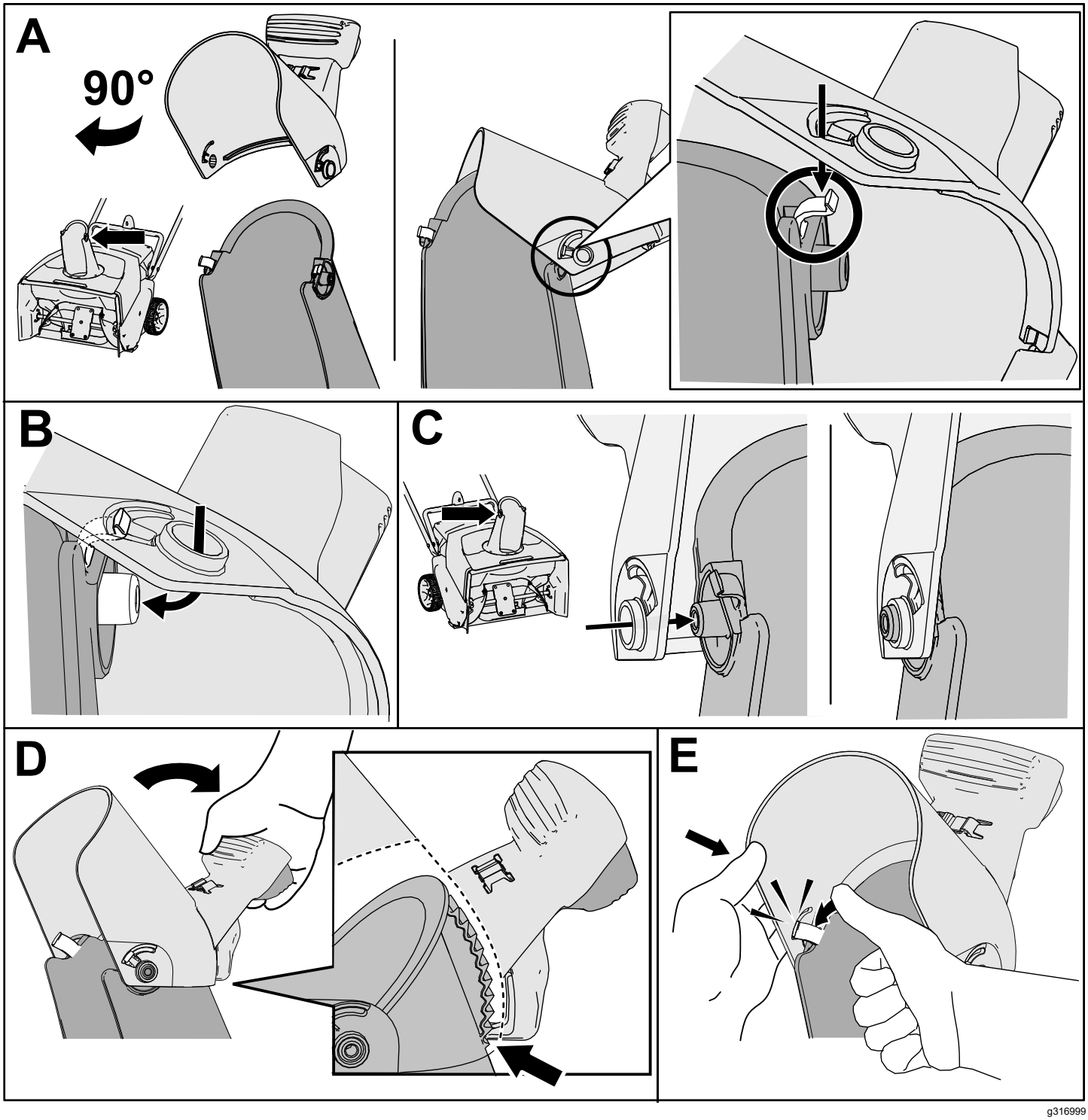

Figure 7

4

Installing the Chute-Control Rod

Parts needed for this procedure:

1	Chute-control rod

Procedure

1. Ensure that the chute is facing forward (Figure 8).
2. With the handle facing forward, install the chute-control rod into the guide and push it down until it snaps into place (Figure 8).

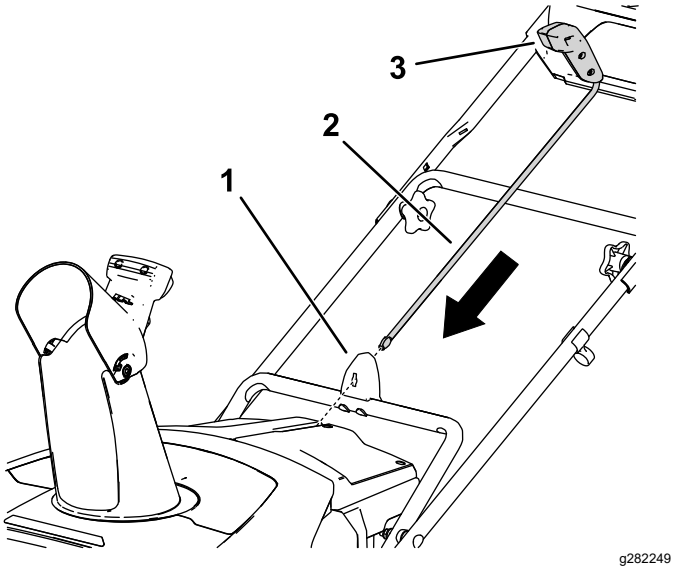

Figure 8

1. Chute-control guide
2. Chute-control rod
3. Chute-control handle

Product Overview

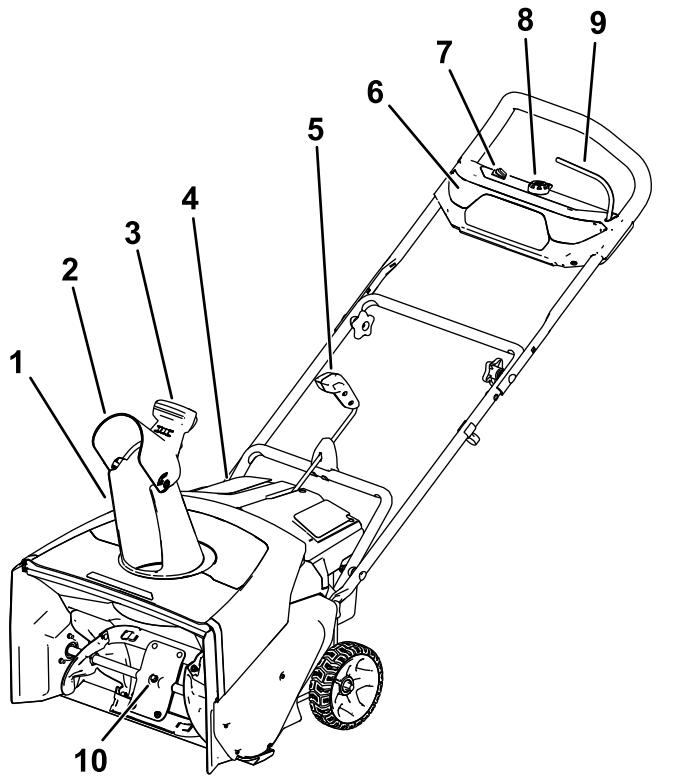

Figure 9

1. Discharge chute
2. Chute deflector
3. Chute-deflector handle
4. Battery-compartment lid
5. Chute-control rod
6. Headlight
7. ECO switch
8. Electric-start button
9. Bail
10. Rotor blades

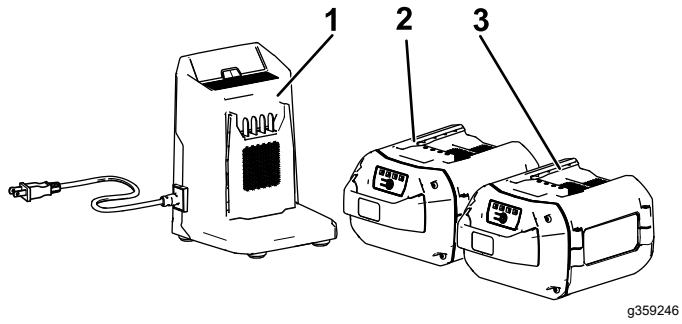

Figure 10

1. Battery charger Model 88902 (included with Model 39901 and 39902)
2. Battery pack Model 88975 (included with Model 39901)
3. Battery pack Model 88960 (2 included with Model 39902)

Specifications

Battery Pack

Model	**88960**	**88975**
Battery pack capacity	6.0 Ah	7.5 Ah
	324 Wh	405 Wh
Battery manufacturer rating = 60V maximum and 54V nominal. Actual voltage varies with load.		

Battery Charger

Model	**88902**
Type	60V MAX Lithium-Ion Battery Charger
Input	120V AC ~2.0A, 60Hz
Output	60V DC ⎓ 2.0A MAX

Appropriate Temperature Ranges

Charge/store the battery pack at	5°C (41°F) to 40°C (104°F)*
Use the machine at	-30°C (-22°F) to 23°C (73°F)*
Store the machine at	-30°C (-22°F) to 49°C (120°F)*

*Charging time will increase if you do not charge the battery within this range.

Store the machine, battery pack, and battery charger in an enclosed clean, dry area.

Attachments/Accessories

A selection of Toro approved attachments and accessories is available for use with the machine to enhance and expand its capabilities. Contact your Authorized Service Dealer or authorized Toro distributor or go to www.Toro.com for a list of all approved attachments and accessories.

To ensure optimum performance and continued safety certification of the machine, use only genuine Toro replacement parts and accessories. Replacement parts and accessories made by other manufacturers could be dangerous.

Operation

Installing the Battery Pack

Important: **Use the battery pack only in temperatures that are within the appropriate range; refer to Specifications (page 14).**

1. Make sure that the vents on the battery are clear of any dust and debris.
2. Lift up the battery-compartment lid (A of Figure 11).
3. Line up the cavity in the battery pack with the tongue on the machine and slide the battery pack into the compartment until it locks into place (B of Figure 11).
4. Close the battery-compartment lid (C of Figure 11).

   Note: If the battery-compartment lid does not close completely, the battery is not fully installed.

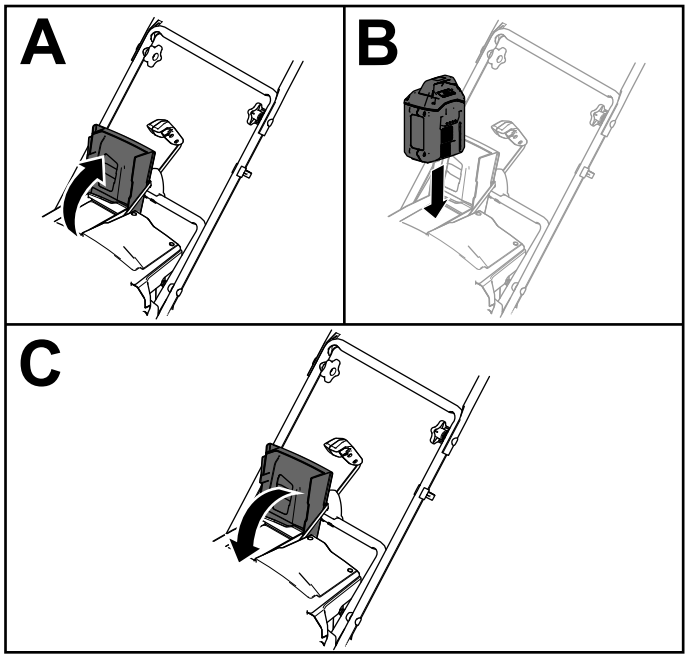

g282250

Figure 11

Starting the Machine

1. Ensure that the battery pack is installed in the machine; refer to Installing the Battery Pack (page 15).
2. Insert the electric-start button into the electric starter (A of Figure 12).
3. Squeeze the bail and hold it to the handle (B and C of Figure 12).

   Note: When you squeeze the bail, the lights turn on and the battery-charge indicator lights on the battery illuminate.
4. Press the electric-start button until the motor starts (D of Figure 12).

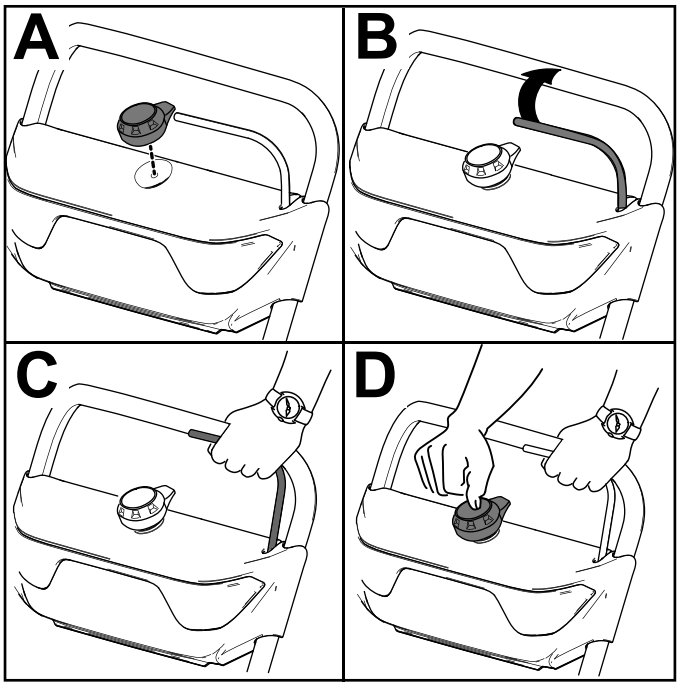

g288479

Figure 12

Activating ECO Mode

Using ECO mode may extend battery life by reducing rotor speed; use ECO mode whenever you are moving snow a short distance. Activate ECO mode using the ECO switch as shown in Figure 9.

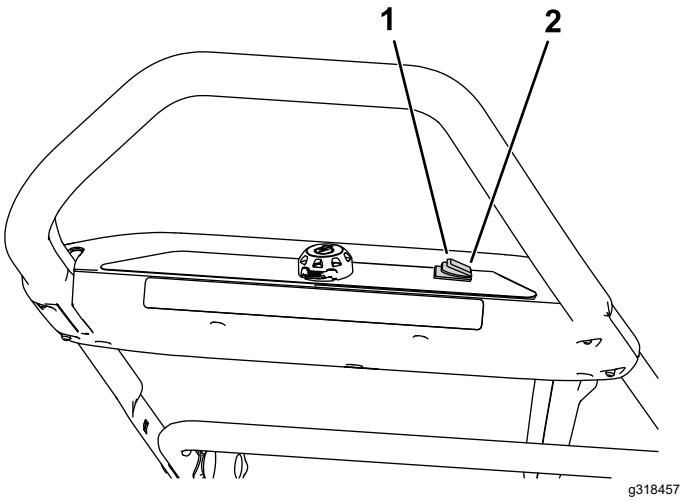

Figure 13

1. Turn ECO mode on
2. Turn ECO mode off

Shutting Off the Machine

1. Release the bail (A of Figure 14).
2. Remove the electric-start button from the electric starter (B of Figure 14).
3. Remove the battery pack; refer to Removing the Battery Pack from the Machine (page 16).

   Note: Whenever you are not using the appliance, remove the battery pack.

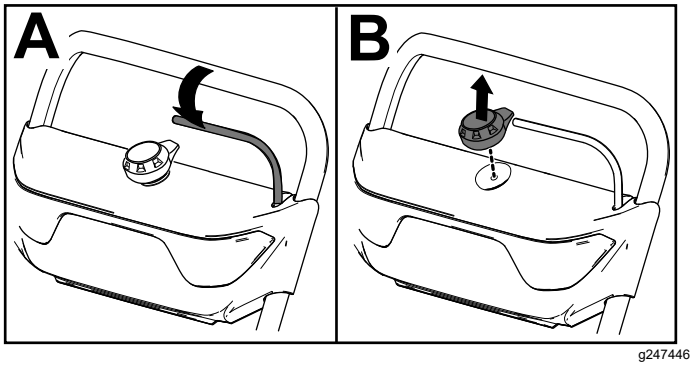

Figure 14

Removing the Battery Pack from the Machine

1. Lift up the battery-compartment lid.
2. Press the battery pack-latch to release the battery pack and remove the battery pack.
3. Close the battery-compartment lid.

Charging the Battery Pack

Important: **The battery pack is not fully charged when you purchase it. Before using the tool for the first time, place the battery pack in the charger and charge it until the LED display indicates the battery pack is fully charged. Read all safety precautions.**

Important: **Charge the battery pack only in temperatures that are within the appropriate range; refer to Specifications (page 14).**

Note: At any time, press the battery-charge-indicator button on the battery pack to display the current charge (LED indicators).

1. Ensure that the vents on the battery and battery charger are clear of any dust and debris.

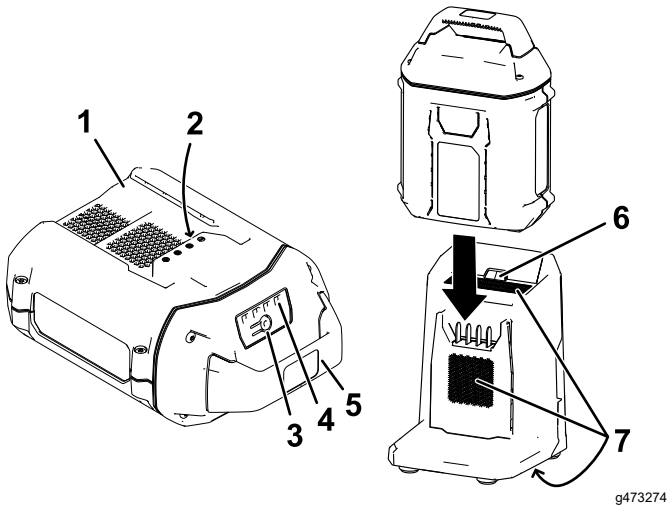

Figure 15

1. Battery pack cavity
2. Battery pack terminals
3. Battery-charge-indicator button
4. LED indicators (current charge)
5. Handle
6. Charger LED indicator light
7. Charger venting areas

2. Line up the cavity in the battery pack (Figure 15) with the tongue on the charger.
3. Slide the battery pack into the charger until it is fully seated (Figure 15).
4. To remove the battery pack, slide the battery backward out of the charger.
5. Refer to the following table to interpret the LED indicator light on the battery charger.

Indicator light	Indicates
Off	No battery pack inserted
Green blinking	Battery pack is charging
Green	Battery pack is charged
Red	Battery pack and/or battery charger is over or under the appropriate temperature range
Red blinking	Battery pack charging fault*

*Refer to Troubleshooting (page 21) for more information.

Important: **The battery can be left on the charger for short periods between uses.**

If the battery will not be used for longer periods, remove the battery from the charger; refer to Storage (page 20).

Adjusting the Discharge Chute and Chute Deflector

To adjust the discharge chute, move the handle on the chute-control rod in the direction that you wish to direct the snow stream.

To adjust the chute deflector (and therefore the height of the snow stream), squeeze the trigger and raise or lower the chute deflector (Figure 16).

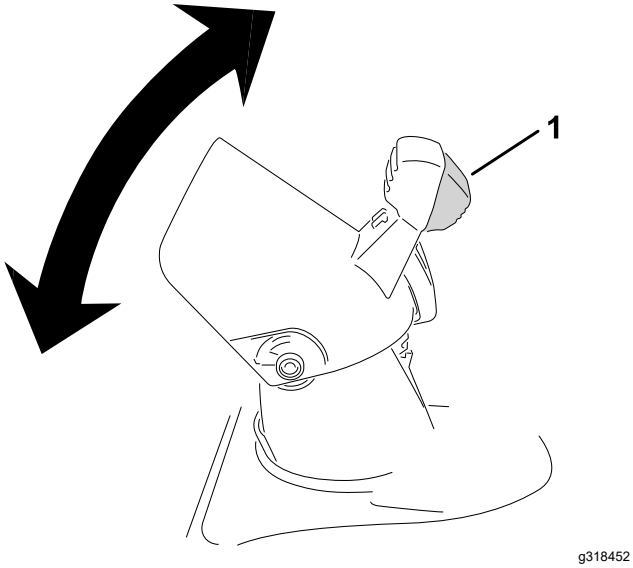

Figure 16

1. Chute deflector trigger

⚠ WARNING

A gap between the discharge chute and the chute deflector may allow the machine to throw snow and objects in the direction of the operator. Thrown objects could cause serious personal injury.

- **Do not force the chute deflector too far forward so that a gap appears between the discharge chute and chute deflector.**
- **Do not adjust the chute deflector with the power control bar engaged. Release the power control bar before adjusting the chute deflector.**

Clearing a Clogged Discharge Chute

⚠ WARNING

Contacting a rotating rotor with your hands inside the discharge chute could cause serious personal injury.

Never use your hands to clean out the discharge chute.

1. Shut off the motor, remove the electric-start button, and remove the battery pack.
2. Wait 10 seconds to ensure that the rotor blades have stopped rotating.
3. Always use a clean-out tool, not your hands, to clear the chute.

Operating Tips

⚠ WARNING

The rotor can throw stones, toys, and other foreign objects and cause serious personal injury to you or bystanders.

- **Keep the area to be cleared free of all objects that the rotor blades could pick up and throw.**
- **Keep all children and pets away from the area of operation.**

- Remove the snow as soon as possible after it falls.
- Push the machine forward, but allow it to work at its own pace.
- Overlap each swath to ensure complete snow removal.
- Discharge the snow downwind whenever possible.

Preventing Freeze-up after Use

- Let the motor run for a few minutes to prevent moving parts from freezing. Shut off the machine, wait for all moving parts to stop, and remove ice and snow from the machine.
- Clean off any snow and ice from the base of the chute.
- Rotate the discharge chute left and right to free it from any ice buildup.
- In snowy and cold conditions, some controls and moving parts may freeze. Do not use excessive force when trying to operate frozen controls. If you have difficulty operating any control or part, start the machine and let it run for a few minutes.

Maintenance

Stop the machine, remove the electric-start button, remove the battery pack from the machine, and wait for all movement to stop before adjusting, servicing, cleaning, or storing the machine.

Replacing the Scraper

Service Interval: Every 20 hours

Replace the scraper blade if it is damaged or if scraping performance is greatly reduced.

When needed, remove and replace the scraper as shown in Figure 17.

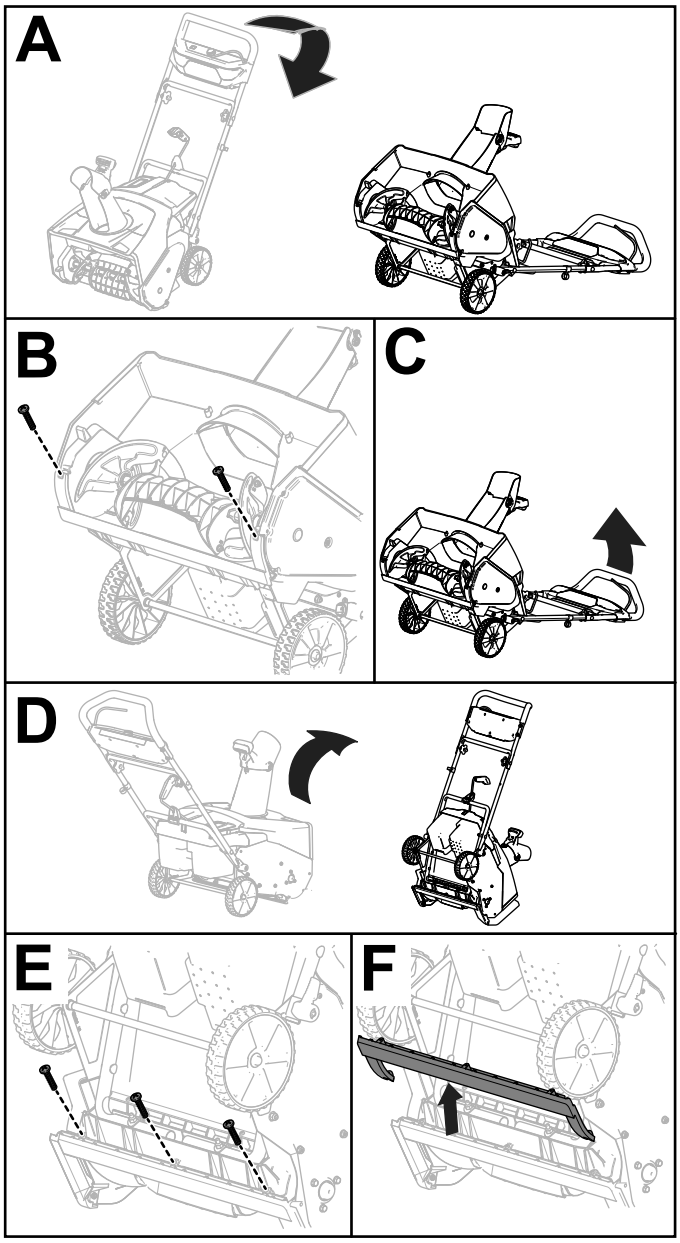

g248009

Figure 17

Storage

Important: **Store the machine, battery pack, and charger only in temperatures that are within the appropriate range; refer to Specifications (page 14).**

Important: **If you are storing the battery pack for the off-season, charge it until 1 or 2 LED indicators turn green on the battery. Do not store a fully charged or fully depleted battery. When you are ready to use the machine again, charge the battery pack until the left indicator light turns green on the charger or all 4 LED indicators turn green on the battery.**

- Disconnect the product from the power supply (i.e., remove the plug from the power supply or the battery pack) and check for damage after use.
- Clean all foreign material from the product.
- Do not store the tool with the battery pack installed.
- When not in use, store the machine, battery pack, and battery charger out of the reach of children.
- Keep the machine, battery pack, and battery charger away from corrosive agents, such as garden chemicals and de-icing salts.
- To reduce the risk of serious personal injury, do not store the battery pack outside or in vehicles.
- Store the machine, battery pack, and battery charger in an enclosed clean, dry area.

Preparing the Battery Pack for Recycling

Important: **Upon removal, cover the terminals of the battery pack with heavy-duty adhesive tape. Do not attempt to destroy or disassemble the battery pack or remove any of its components.**

RECYCLE RBRC Li-ion 1.800.822.8837	Lithium-ion battery packs labeled with the Call2Recycle seal can be recycled at any participating retailer or battery recycling facility in the Call2Recycle program (US and Canada only). To locate a participating retailer or facility closest to you, please call 1-800-822-8837 or visit www.call2recycle.org. If you cannot locate a participating retailer or facility nearby, or if your rechargeable battery is not labeled with the Call2Recycle seal, please contact your local municipality for more information on how to responsibly recycle the battery. If you are located outside of the US and Canada, please contact your authorized Toro distributor.

Troubleshooting

Perform only the steps described in these instructions. All further inspection, maintenance, and repair work must be performed by an authorized service center or a similarly qualified specialist if you cannot solve the problem yourself.

Problem	Possible Cause	Corrective Action
The machine does not run or does not run continuously.	1. The battery pack is low on charge. 2. The battery is not fully installed in the machine. 3. The battery pack is over or under the appropriate temperature range. 4. The battery pack has exceeded high amperage limits. 5. There is moisture on the leads of the battery pack. 6. The battery pack is damaged. 7. There is another electrical problem with the machine.	1. Charge the battery pack. 2. Remove and then reseat the battery into the machine, making sure that it is fully installed and latched. 3. Move the battery pack to a place where it is dry and the temperature is between 5°C (41°F) and 40°C (104°F). 4. Release the trigger, then press the trigger switch. 5. Allow the battery pack to dry or wipe it dry. 6. Replace the battery pack. 7. Contact your Authorized Service Dealer.
The machine does not reach full power.	1. The battery pack charge capacity is too low. 2. The air vents are blocked.	1. Remove the battery pack from the machine and fully charge the battery pack. 2. Clean the air vents.
The machine runs, but the machine discharges snow poorly or not at all.	1. The machine is overloaded. 2. You are trying to remove too much snow per swath. 3. You are trying to remove extremely heavy or wet snow. 4. The discharge chute is plugged. 5. The auger/impeller drive belt is loose or is off the pulley. 6. The auger/impeller drive belt is worn or broken.	1. Push the machine with less force, or at a slower pace. 2. Reduce the amount of snow removed per swath. 3. Do not overload the machine with extremely heavy or wet snow. 4. Unclog the discharge chute. 5. Install and/or adjust the auger/impeller drive belt; refer to www.Toro.com for servicing information or take the machine to an Authorized Service Dealer. 6. Replace the auger/impeller drive belt; refer to www.Toro.com for servicing information or take the machine to an Authorized Service Dealer.
The battery pack loses charge quickly.	1. The battery pack is over or under the appropriate temperature range. 2. The machine is overloaded.	1. Move the battery pack to a place where it is dry and the temperature is between 5°C (41°F) and 40°C (104°F). 2. Push the machine with less force.
The battery charger is not working.	1. The battery charger is over or under the appropriate temperature range. 2. The outlet that the battery charger is plugged into does not have power.	1. Unplug the battery charger and move it to a place where it is dry and the temperature is between 5°C (41°F) and 40°C (104°F). 2. Contact your licensed electrician to repair the outlet.
The LED indicator light on the battery charger is red.	1. The battery charger and/or battery pack is over or under the appropriate temperature range.	1. Unplug the battery charger and move the battery charger and battery pack to a place where it is dry and the temperature is between 5°C (41°F) and 40°C (104°F).

Problem	Possible Cause	Corrective Action
The LED indicator light on the battery charger is blinking red.	1. There is an error in the communication between the battery pack and the charger.	1. Remove the battery pack from the battery charger, unplug the battery charger from the outlet, and wait 10 seconds. Plug the battery charger into the outlet again and place the battery pack on the battery charger. If the LED indicator light on the battery charger is still blinking red, repeat this procedure again. If the LED indicator light on the battery charger is still blinking red after 2 attempts, properly dispose of the battery pack at a battery recycling facility.
	2. The battery pack is weak.	2. Contact your authorized service dealer if the battery is in warranty, or properly dispose of the battery pack at a battery recycling facility.
The machine is producing a beeping sound.	1. The battery pack is not charged.	1. Remove the battery pack from the machine and charge it.
	2. The machine is overloaded.	2. Walk at a slower pace while clearing snow.
	3. There is another electrical problem with the machine.	3. Attempt the other troubleshooting actions, if the alarm still sounds, contact an Authorized Service Dealer.

California Proposition 65 Warning Information

What is this warning?

You may see a product for sale that has a warning label like the following:



WARNING: Cancer and Reproductive Harm—www.p65Warnings.ca.gov.

What is Prop 65?

Prop 65 applies to any company operating in California, selling products in California, or manufacturing products that may be sold in or brought into California. It mandates that the Governor of California maintain and publish a list of chemicals known to cause cancer, birth defects, and/or other reproductive harm. The list, which is updated annually, includes hundreds of chemicals found in many everyday items. The purpose of Prop 65 is to inform the public about exposure to these chemicals.

Prop 65 does not ban the sale of products containing these chemicals but instead requires warnings on any product, product packaging, or literature with the product. Moreover, a Prop 65 warning does not mean that a product is in violation of any product safety standards or requirements. In fact, the California government has clarified that a Prop 65 warning "is not the same as a regulatory decision that a product is 'safe' or 'unsafe.'" Many of these chemicals have been used in everyday products for years without documented harm. For more information, go to https://oag.ca.gov/prop65/faqs-view-all.

A Prop 65 warning means that a company has either (1) evaluated the exposure and has concluded that it exceeds the "no significant risk level"; or (2) has chosen to provide a warning based on its understanding about the presence of a listed chemical without attempting to evaluate the exposure.

Does this law apply everywhere?

Prop 65 warnings are required under California law only. These warnings are seen throughout California in a wide range of settings, including but not limited to restaurants, grocery stores, hotels, schools, and hospitals, and on a wide variety of products. Additionally, some online and mail order retailers provide Prop 65 warnings on their websites or in catalogs.

How do the California warnings compare to federal limits?

Prop 65 standards are often more stringent than federal and international standards. There are various substances that require a Prop 65 warning at levels that are far lower than federal action limits. For example, the Prop 65 standard for warnings for lead is 0.5 µg/day, which is well below the federal and international standards.

Why don't all similar products carry the warning?

- Products sold in California require Prop 65 labelling while similar products sold elsewhere do not.
- A company involved in a Prop 65 lawsuit reaching a settlement may be required to use Prop 65 warnings for its products, but other companies making similar products may have no such requirement.
- The enforcement of Prop 65 is inconsistent.
- Companies may elect not to provide warnings because they conclude that they are not required to do so under Prop 65; a lack of warnings for a product does not mean that the product is free of listed chemicals at similar levels.

Why does Toro include this warning?

Toro has chosen to provide consumers with as much information as possible so that they can make informed decisions about the products they buy and use. Toro provides warnings in certain cases based on its knowledge of the presence of one or more listed chemicals without evaluating the level of exposure, as not all the listed chemicals provide exposure limit requirements. While the exposure from Toro products may be negligible or well within the "no significant risk" range, out of an abundance of caution, Toro has elected to provide the Prop 65 warnings. Moreover, if Toro does not provide these warnings, it could be sued by the State of California or by private parties seeking to enforce Prop 65 and subject to substantial penalties.



Count on it.