THOR KITCHEN

GORDON RAMSAY COLLECTION

USE + CARE MANUAL

GORDON RAMSAY COLLECTION
BY THOR KITCHEN

RSE30P
RSE30PB
RSE30PW



REV.062026

USE & CARE MANUAL

GORDON RAMSAY COLLECTION BY THOR KITCHEN

RSE30P | RSE30PB | RSE30PW

THOR KITCHEN®

TABLE OF CONTENTS

BEFORE YOU BEGIN.....5
ANTI-TIP DEVICE.....6
IMPORTANT SAFETUINSTRUCTIONS.....7
Important safety instructions.....7
What you need to know about safety instrudions.....7
For your safety.....8
Important safety instrucions.....8
Surface cooking units.....9
Electical safety.....10
Child safety.....10
Oven.....11
Ventilating hood.....12
Glass/ceramic cooking surfaces.....12
Critical installation warnings.....12
Usage cautions.....13
PRODUCT DIMENSION.....15
Checking the installation site.....15
PREPARING TO INSTALL THE RANGE.....16
Minimum dimensions.....16
CONNECTING THE POWER.....17
INTRODUCING YOUR NEW RANGE.....20
Before you begin.....20
Energy saving tips.....20
COOKTOP COOKING.....21

TABLE OF CONTENTS

OPERATING THE OVEN....26
Oven burner use....26
Broil bumer use....26
Oven cooking safety guidelines....26
Oven function....26
Broiler operation....30
CLEANING AND MAINTENANCE....30
Cleaning stainless steel surfaces....30
Cleaning the oven racks....30
Cleaning the oven door....31
Cleaning the surface burner control knobs....32
REMOVING AND REPLACING THE OVEN DOOR....34
Removing the oven door....34
Replacing the oven door....35
TROUBLE SHOOTING....36
Installation....36
Cooktop....36
Oven....38
RUBBER PAD INSTALLATION ON BACK PANEL....39
WARRANTY....40
Warranty and service....40

READ THESE INSTRUCTIONS COMPLETELY AND CAREFULLY.

IMPORTANT NOTE TO THE INSTALLER

- Read all instructions contained in these installation instructions before installing the range.
- Remove all packing materials from the oven compartments before connecting the electric supply to the range.
- Observe all governing codes and ordinances.
- Be sure to leave these instructions with the consumer.
- Installation of this appliance requires basic mechanical skills.
- Proper installation is the responsibility of the installer.
- Product failure due to improper installation is not covered under the Warranty.

IMPORTANT NOTE TO THE CONSUMER

- Keep these instructions with your user manual for future reference.
- As when using any appliance generating heat, there are certain safety precautions you should follow.
- Be sure your range is installed and grounded properly by a qualified installer or service technician.
- Make sure the wall coverings around the range withstand the heat generated by the range.
- Cabinet storage space above the surface burners should be a minimum of 30 in. (76.2 cm).

IMPORTANT NOTE TO THE SERVICER

- The electrical diagram is attached to the back of the range.

ANTI-TIP DEVICE

WARNING

To reduce the risk of tipping the range,the range must be secured by a properly installed Anti-Tip device. AFTER THERANGEHAS BEEN INSTALLED,CONFIRM THATTHE ANTI-TIP DEVICE HAS BEEN PROPERLY INSTALLED AND VERIFY THAT THE ANTITIP DEVICE IS PROPERLY ENGAGED.

a) If the anti-tip device is not installed, a child or adult can tip the range and be killed.
b)Verify that the anti-tip device has been properly installed and engaged at therearright
(or rearleft) of the range bottom.
c)If you move the range and then move it back into place, ensure the anti tip device is re-engaged at the right or left rear of the range bottom.
d) Do not operate the range without the anti-tip device in place and engaged.
e) Failure to do so can result in death or serious burns to children or adults.

WARNING

Do not step, lean, or sit on the doors of the range. You can cause the range to tip, resulting in burns or serious injuries.

Confirm that the Anti-Tip device is installed properly. Then, to verify that the Anti-Tip device is engaged, grasp the top rear edge of the range and carefully attempt to tilt it forward. The Anti-Tip device should prevent the range from tilting forward more than a few inches.

If you pull the range out from the wall for any reason, make sure the anti tip device is properly engaged when you push the range back against the wall. If it is not, there is a risk of the range tipping over and causing injury if you or a child stand, sit, or lean on the open door.

Never completely removethe leveling legs. If you remove the leveling legs, the range will not be secured to the anti-tip device properly.

CALIFORNIA PROPOSITION 65 WARNING

CAUTION
Cancer and Reproductive Harm-www.P65Warnings.ca.gov.

Important safety instructions
Read and follow all instructions before using your oven to prevent the risk of fire, electric shock, personal injury, or damage when using the range.This guide does not cover all possible conditions that may occur. Always contact your service agent or manufacturer about problems that you do not understand.

WHAT YOU NEED TO KNOW ABOUT SAFETY INSTRUCTIONS
Warnings and Important Safety Instructions in this manual do not cover all possible conditions and situations that may occur.

It is your responsibility to use common sense, caution, and care when installing, maintaining, and operating your oven.

Important safety symbols and precautions
What the icons and signs in this user manual mean:

WARNING
Hazards or unsafe practices that may result in severe personal injury or death.

CAUTION
Hazards or unsafe practices that may result in minor personal injury or property damage.

CAUTION
To reduce the risk of fire, explosion, electric shock, or personal injury when using you oven, follow these basic safety precautions.

Do **NOT** attempt.
Do **NOT** disassemble.
Do **NOT** touch.
Follow directions explicitly.
Unplug the power plug from the wall socket. Make sure the machine is grounded to prevent electric shock.
Call the service center for help.

NOTE

These warning signs are here to prevent injury to you and others. Please follow them explicitly. After reading this section, keep it in a safe place for future reference.

IMPORTANT SAFETY INSTRUCTIONS

FOR YOUR SAFETY

When using electrical appliances, you should follow basic safety precautions, including the following:

CAUTION

- Use this appliance only for its intended purpose as described in this Owner's Manual.
- Potentially hot surfaces include the cooktop, areas facing the cooktop, oven vent opening, surfaces near the opening, crevices around the oven door.

Be sure your appliance is properly installed and grounded by a qualified technician. User servicing - Do not repair or replace any part of the appliance unless specifically recommended in this manual. All other servicing should be referred to a qualified technician.

Always disconnect the power to the appliance before servicing by removing the fuse or switching off the circuit breaker.

- Do not enter the oven.
- Do not store items of interest to children in cabinets above a range or on the back guard of a range. Children climbing on the range to reach items could be seriously injured
- Do not leave children alone. Never leave children alone or unattended in an area where this appliance is in use. They should never be allowed to sit or stand on any part of the appliance.
- Never use your appliance for warming or heating the room.
- Do not use water on grease fires. Turn off the oven to avoid spreading the flames. Smother the fire or flames by closing the door or use a dry chemical, baking soda, or foam-type extinguisher.
- Avoid scratching or impacting glass doors, cooktops or control panels. Doing so may lead to glass breakage. Do not cook on a product with broken glass. Shock, fire, or cuts may occur.
- Do not lean on the range as you may turn the control knobs inattentively.

Important safety instructions

- Storage in or on the appliance. Do not store flammable materials in the oven or near the surface units. Be sure all packing materials are removed from the appliance before operating it.
- Keep plastics, clothes, and paper away from parts of the appliance that may become hot.
- Wear proper apparel. Never wear loose-fitting or hanging garments while using the appliance.
- Use only dry potholders. Placing moist or damp potholders on hot surfaces may result in burns from steam. Do not let the potholder touch hot heating elements. Do not use a towel or other bulky cloth.
- Teach children not to play with the controls or any other part of the range.
- For your safety, do not use high-pressure water cleaners or steam jet cleaners.
- The appliance is not intended for use by persons (including children) with reduced physical, sensory or mental capabilities, or lack of experience and knowledge, unless they have been given supervision or instruction concerning use of the appliance by a person responsible for their safety.

IMPORTANT SAFETY INSTRUCTIONS

SURFACE COOKING UNITS

•Never leave surface units unattended at high heat settings. Boilovers cause smoking and greasy spillovers that may ignite.
•Protective Liners – Do not use aluminum foil to line surface unit drip bowls or oven bottoms, except as suggested in the manual. Improper installation of these liners may result in a risk of electric shock or fire.
•To avoid oil spillover and fire, use a minimum amount of oil when shallow pan-frying and avoid cooking frozen foods with excessive amounts of ice.
•Do not operate the cooktop without cookware. If the cooktop operates without cookware, the control knobs will become hot.
• Never use the glass cooktop surface as a cutting board.
•Use care when touching the cooktop. The glass surface of the cooktop will retain heat after the controls have been turned off.
•Be careful when placing spoons or other stirring utensils on the glass cooktop surface when it is in use. They may become hot and could cause burns.
•Use proper pan sizes. This appliance is equipped with surface units of different size. Select pots and pans that have flat bottoms large enough to cover the surface area of the heating element. Using undersized cookware will expose a portion of the heating element to direct contact and may result in the ignition of clothing. Matching the size of the pot or pan to the burner will also improve efficiency.
• Utensil Handles Should Be Turned Inward and Not Extend Over Adjacent Surface Units.
•To reduce the risk of burns, ignition of flammable materials, or spillage due to unintentional contact with utensils, position utensil handles so that they are turned inward and do not extend over adjacent surface units.
•Glazed cooking utensils. Only certain types of glass, glass/ ceramic, ceramic, earthenware, or other glazed cookware can be used for rangetop service without breaking due to sudden changes in temperature.
•Be sure you know which control knob operates each surface unit. Make sure you turned on the correct surface unit.
• Always turn the surface units off before removing cookware.
• When preparing flaming foods under the hood, turn the fan on.
• Keep an eye on foods being fried at high or medium high heat settings.
• Do not store heavy items above the cooktop surface that mcould fall and damage it.
•Do not Use Decorative Surface Element Covers – If an element is accidentally turned on, the decorative cover will become hot and possibly melt. Burns will occur if the hot covers are touched. Damage may also be done to the cooktop.

IMPORTANT SAFETY INSTRUCTIONS

ELECTRICAL SAFETY

- Proper Installation - Be sure your appliance is properly installed and grounded by a qualified technician.
- Flush - mounted appliances may be operated only after they have been installed in cabinets and workplaces that conform to the relevant standards. This ensures that the appliances are installed in compliance with the appropriate safety standards.
- If your appliance malfunctions or if fractures, cracks, or splits appear:
  - switch off all cooking zones
  - unplug the range from the AC wall outlet
  - contact your local service center.

WARNING

If the surface is cracked, switch off and unplug the appliance to avoid the possibility of electrical shock. Do not use your cooktop until the glass surface has been replaced.

WARNING

- Ensure that the appliance is switched off before replacing the lamp to avoid the possibility of electric shock.
- The range should not be placed on a base.

CHILD SAFETY

WARNING

- This appliance is not intended for use by young children or infirm persons without the adequate supervision of a responsible adult.
- Young children should be supervised to ensure that they do not play with the appliance.
- Keep children away from the door when opening or closing it as they may bump themselves on the door or catch their fingers in the door.
- The cooking zones will become hot when you cook. To keep small children from being burned, always keep them away from the appliance while you are cooking.

WARNING

Accessible parts may become hot during use. To avoid burns, young children should be kept away.

IMPORTANT SAFETY INSTRUCTIONS

OVEN

- **DO NOT TOUCH THE HEATING ELEMENTS OR INTERIOR SURFACES OF THE OVEN**. Heating elements may be hot even though they are dark in color. Interior surfaces of an oven become hot enough to cause burns. During and after use, do not touch or let clothing or other flammable materials contact the heating elements or interior surfaces of the oven until they have had sufficient time to cool. Other surfaces of the appliance may become hot enough to cause burns. Among these surfaces are oven vent openings and surfaces near these openings, the oven door, and the window of the oven door.
- **Do not heat unopened food containers**. The build-up of pressure may cause the container to burst and result in injury.
- **Do not use the oven to dry newspapers**. If overheated, newspapers can catch on fire.
- **Do not use the oven for a storage area**. Items stored in an oven can ignite.
- Use care when opening the door. Let hot air or steam escape before you remove food from or put food into the oven.
- **Protective liners**. Do not use aluminum foil to line the oven bottoms, except as suggested in the manual. Improper installation of these liners may result in a risk of electric shock or fire.
- **Keep oven vent ducts unobstructed**. The oven vent is located above the right rear surface unit. This area could become hot during oven use. Never block this vent or place plastic or heat-sensitive items on it.
- **Placement of oven racks**. Always place oven racks in the desired location while the oven is cool. If the rack must be moved while the oven is hot, use potholders. Do not let the potholders come in contact with the hot heating element in the oven.
- Do not allow aluminum foil or a meat probe to contact the heating elements.
- **During use, the appliance becomes hot**. Care should be taken to avoid touching heating elements inside the oven.
- Do not use harsh abrasive cleaners or sharp metal scrapers to clean the oven door glass. They can scratch the surface which may result in the glass shattering.

CAUTION

Do not attempt to operate the oven during a power failure. If the power fails, alwaysturn the oven off. If the oven is not turned off and the power returns, the oven may begin to operate again. Food left unattended could catch fire or spoil.

IMPORTANT SAFETY INSTRUCTIONS

VENTILATING HOOD

•Clean ventilating hoods frequently. Do not let grease accumulate on the hood or filter.
• When flaming foods under the hood, turn the fan on.

GLASS/CERAMIC COOKING SURFACES

• DO NOT TOUCH SURFACE UNITS OR AREAS NEAR UNITS. Surface unitsmay be hot even though they are dark in color.Areas near surface units may become hot enough to cause burns. During and after use, do not touch, or let clothing or other flammable materials contact the surface units or areas near the units until they have had sufficient time to cool.Among these areas are the cook-top and the facing of the cook-top.
• Do not cook on a broken cooktop. If the cooktop should break, cleaning solutions and spillovers may penetrate the broken cook-top and create a risk of electric shock. Contact a qualified technician immediately.
Clean the cooktop with caution. If a wet sponge or cloth is used to wipe spills on a hot cooking area, be careful to avoid steam burns. Some cleaners can produce noxious fumes if applied to a hot surface.

CRITICAL INSTALLATION WARNINGS

WARNING

• This appliance must be installed by a qualified technician or service company.
- Failing to have a qualified technician install the range may result in electric shock, fire, an explosion, problems with the product, or injury.
• Unpack the oven, remove all packaging material and examine the oven for any damage such as dents on the interior or exterior of the oven, broken door latches, cracks in the door, or a door that is not lined up correctly. If there is any damage, do not operate the oven and notify your dealer immediately.
• Plug the power cord into a properly grounded outlet with the proper configuration. Your oven should be the only item connected to this circuit.
• Keep all packaging materials out of the reach of children. Children may use them for play and injure themselves.
• Install your appliance on a level and hard floor that can support its weight.
- Failing to do so may result in abnormal vibrations, noise, or problems with the product.

IMPORTANT SAFETY INSTRUCTIONS

- This appliance must be properly grounded.
- Do not ground the appliance to a gas pipe, plastic water pipe, or telephone line.
  - This may result in electric shock, fire, an explosion, or problems with the product
- Do not cut or remove the ground prong from the power cord under any circumstances.
- Connect the oven to a circuit that provides the correct amperage.
- Do not install this appliance in a humid, oily or dusty location, or in a location exposed to direct sunlight or water (rain drops).
  - This may result in electric shock or fire.
- Do not use a damaged power cord or loose wall socket.
  - This may result in electric shock or fire.
- Do not pull or excessively bend the power cord.
- Do not twist or tie the power cord.
- Do not hook the power cord over a metal object, place a heavy object on the power cord, or insert the power cord between objects.
  -This may result in electric shock or fire. If the power cord is damaged, contact your nearest service center.

USAGE CAUTIONS

CAUTION

- If the surface is cracked, turn the appliance off.
  - Failing to do so may result in electric shock.
- Dishes and containers can become hot. Handle with care.
- Hot foods and steam can cause burns. Carefully remove container coverings, directing the steam away your hands and face.
- Remove lids from baby food jars before heating. After heating baby food, stir well to distribute the heat evenly. Always test the temperature by tasting before feeding the baby. The glass jar or the surface of the food may appear to be cooler than the interior, which can be hot enough to burn an infant's mouth.
- Take care as beverages or food may be very hot after heating.
  - Especially when feeding a child. Check that it has cooled sufficiently.
- Take care when heating liquids such as water or other beverages.
  - Make sure to stir during or after cooking.
  - Avoid using a slippery container with a narrow neck.
  - Wait at least 30 seconds after heating before removing the heated liquid.
  - Failing to do so may result in an abrupt overflow of the contents and cause burns.

IMPORTANT SAFETY INSTRUCTIONS

- Do not stand on top of the appliance or place objects (such as laundry, oven cover, lighted candles, lighted cigarettes, dishes, chemicals, metal objects, etc.) on the appliance.
  - Items, such as a cloth, may get caught in the door.
  - This may result in electric shock, fire, problems with the product, or injury.
- Do not operate the appliance with wet hands.
  - This may result in electric shock.
- Do not spray volatile substances such as insecticide onto the surface of the appliance.
  -As well as being harmful to humans, it may also result in electric shock, fire, or problems with the product.
- Do not put your face or body close to the appliance while cooking or when opening the door just after cooking.
  - Take care that children do not come too close to the appliance.
  - Failing to do so may result in children burning themselves.
- Do not place food or heavy objects over the edge of the oven door.
  -If you open the door, the food or object may fall and this may result in burns or injury.
- Do not abruptly cool the door, the inside of the appliance, or a dish by pouring water over it during or just after cooking.
  -This may result in damage to the appliance. The steam or water spray may result in burns or injury.
- Do not operate while empty except for self-cleaning.
- Do not defrost frozen beverages in narrow-necked bottles. The bottles can break.
- Do not scratch the glass of the oven door with a sharp object.
  - This may result in the glass being damaged or broken.
- Do not store anything directly on top of the appliance when it is in operation.
- Do not use sealed containers. Remove seals and lids before cooking. Sealed containers can explode due to the build up of pressure even after the oven has been turned off.
- Take care that food you are cooking in the oven does not come into contact with the heating element.
  - This may result in fire.
- Do not over-heat food.
  - Overheating food may result in fire.

PRODUCT DIMENSION

30" Electric Range

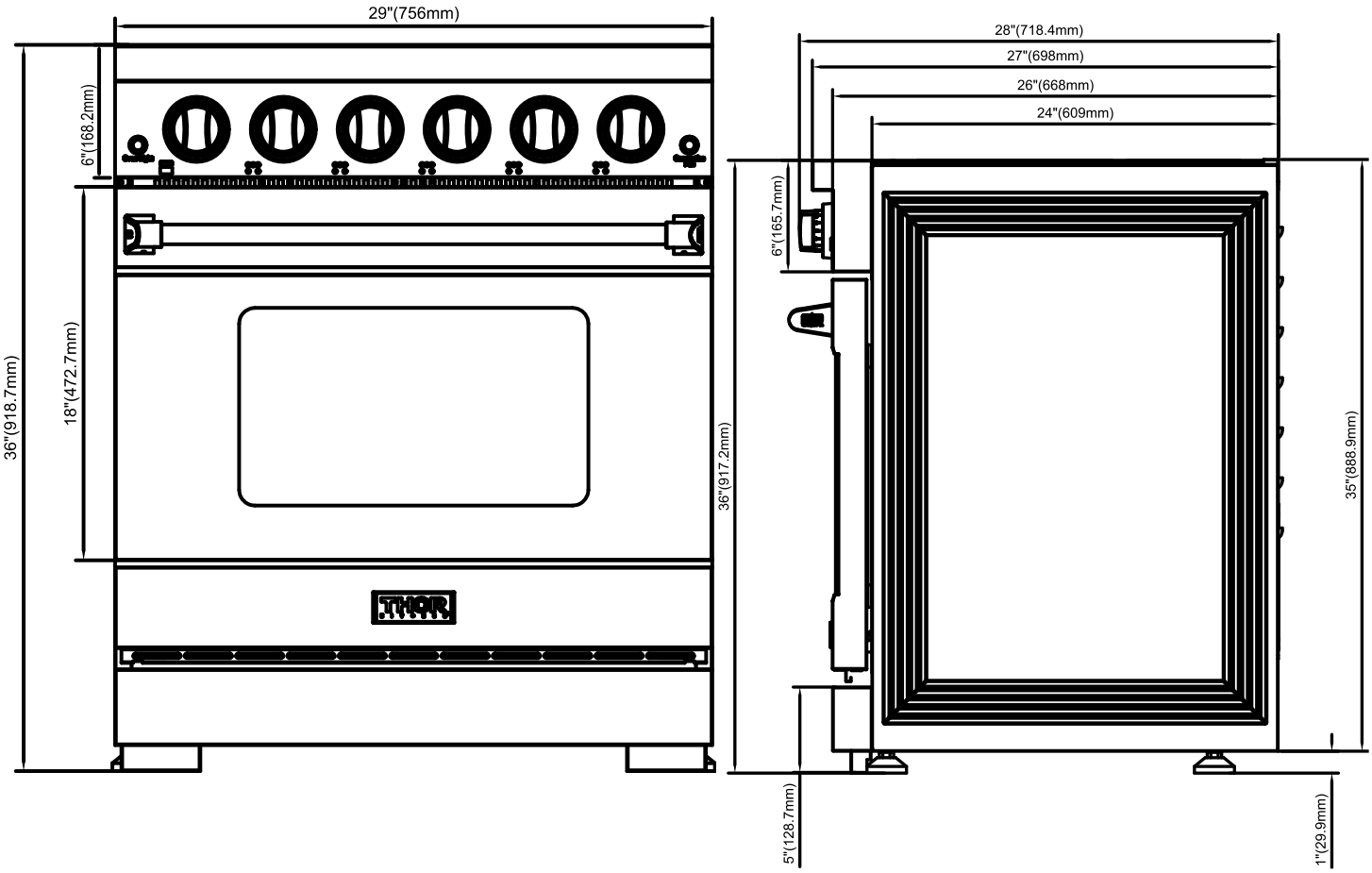

CHECKING THE INSTALLATION SITE

Clearances and dimensions

To install the range, refer to the following figure.
For installation in CANADA, a Free-standing range is not to be installed closer than 12mm from any adjacent surface.

CAUTION

This range has been designed to comply with the maximum allowable wood cabinet temperatures of 194°F. Makesurethewall covering,countertops and cabinetsaround the range can withstand the heat (up to 194 °F) generated by the range. If not, discoloration, delamination or melting may occur.

REPARING TO INSTALL THE RANGE

Minimum dimensions

IMPORTANT

To eliminate the risk of burns or fire caused by reaching over heated surface units, cabinet storage space located above the surface units should be avoided. If cabinet storage is to be provided, the risk can be reduced by installing a range hood that projects horizontally a minimum of 5" beyond the bottom of the cabinets.

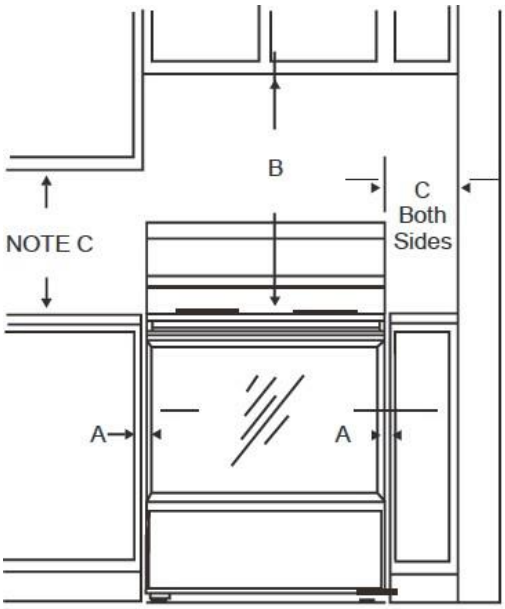

MINIMUM DIMENSIONS BETWEEN COOKTOP, WALLS AND ABOVE THE COOKTOP:

A: Make sure the wall covering, countertop, flooring and cabinets around the range can withstand the heat (up to 200°F) generated by the range.

B: Allow 30" minimum clearance between surface units and bottom of unprotected wood or metal cabinet, or allow a 24" minimum when bottom of wood or metal cabinet is protected by no less than 1/4" thick flame retardant millboard covered with not less than No 28 MSG sheet metal, (.015"), .015" thick stainless steel, .024" aluminum or .020" copper.

C: This appliance has been approved for 0" spacing to adjacent surfaces above the cooktop. However, a 6" minimum spacing to surfaces less than 15" above the cooktop and adjacent cabinet is recommended to reduce exposure to steam, grease splatter and heat.

To reduce the risk of burns or fire when reaching over hot surface elements, cabinet storage space above the cooktop should be avoided. If cabinet storage space is to be provided above the cooktop, the risk can be reduced by installing a range hood that projects at least 5" beyond the front of the cabinets. Cabinets installed above the cooktop must be no deeper than 16".

D: Allow 24"/30"/36" (depensing on your range width) minimun clearance between right and left cabinets.

CONNECTING THE POWER

STEP 1. MEETING ELECTRICAL CONNECTION REQUIREMENTS

CAUTION

For personal safety, do not use an extension cord with this appliance.
Remove house fuse or open circuit breaker before beginning installation.
This appliance must be supplied with the proper voltage and frequency, and connected to an individual properly grounded branch circuit, protected by a circuit breaker or fuse having amperage as specified on the rating plate. The rating plate is located on the right of oven door.
We recommend you have the electrical wiring and hookup of your range connected by a qualified electrician. After installation, have the electrician show you where your main range disconnect is located.
Check with your local utilities for electrical codes which apply in your area.
Failure to wire your oven according to governing codes could result in a hazardous condition. If there are no local codes, your range must be wired and fused to meet the requirements of the National Electrical Code, ANSI/NFPA No.70–Latest Edition.
Effective January 1,1996, the National Electrical Codere quires that new construction (not existing) utilize a 4-conductor connection to an electric range.
When installing an electric range in new construction, follow Steps for 4-wire connection.
You must use a 3-wire or 4-wire, single-phase A.C. 208Y/120 Volt or 240/120 Volt, 60 hertz electrical system.
If the electrical service provided does not meet the above specifications, have a licensed electrician install an approved outlet.
Use only a 3-conductor or a 4-conductor UL-listed range cord. These cords maybe provided with ring terminals on wire and a strain relief device.
A range cord rated at 40 amps with 125/250 minimum volt range is required. A 50 amp range cord is not recommended but if used, it should be marked for use with no minal 13⁄8" diameter connection openings. Care should be taken to center the cable and strain relief within the knock out hole to keep the edge from damaging the cable.

NOTE

This appliance is manufactured ready to be installed with a 4-wire cord set.

STEP 2. POWER CORD

1. Remove the rear terminal block cover and loosen the 6 screws with a screwdriver. The terminal block will then be accessible. Do not discard these screws.

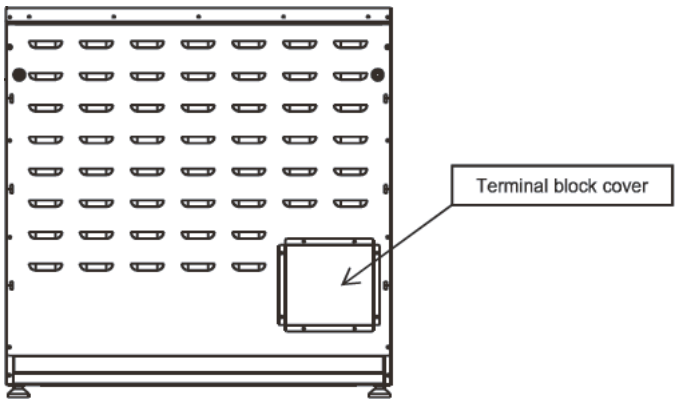

CONNECTING THE POWER

2. For power cord installations only, hook the strain relief over the power cord hole located below the rear of the drawer body. Insert the power cord through the strain relief and tighten the device.

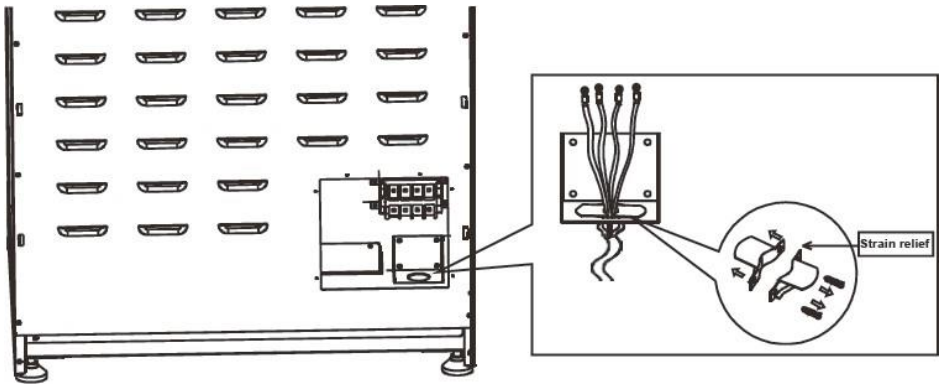

- You must install the power cord with a strain relief.
- Attach the strain relief to the opening in conduit connection plate.

STEP 3. 4-WIRE POWER CORD INSTALLATION

WARNING

Electrical Shock Hazard
Electrical ground is required on this appliance.
Do not connect to the electrical supply until appliance is permanently grounded.
Disconnect power to the circuit breaker or fuse box before making the electrical connection.

This appliance must be connected to a grounded, metallic, permanent wiring system, or a grounding connector should be connected to the grounding terminal or wire lead on the appliance. Failure to do any of the above could result in a fire, personal injury or electrical shock. See below for more information on electrical grounding.

A. Remove the 4 lower terminal screws from the terminal block.
B. Insert the 4 terminal screws through each power cord terminal and into the lower terminals of the terminal block. Be certain that match the wire and terminals by color.
C. Tighten screws securely into the terminal block.

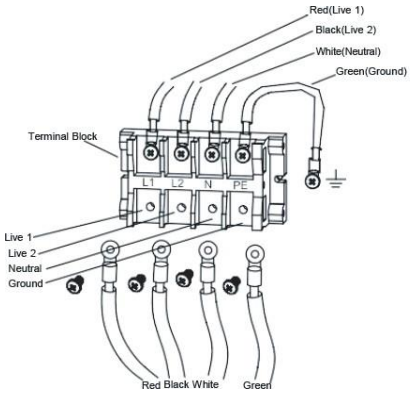

CAUTION
You must check voltage after connecting power cord.

Live 1 - Neutral	120 V
Live 2 - Neutral	120 V
Live 2 - Live 2	240 V

CONNECTING THE POWER

STEP 4 3-wire power cord

WARNING

Electrical Shock Hazard
Electrical ground is required on this appliance.
Do not connect to the electrical supply until appliance is permanently grounded.
Disconnect power to the circuit breaker or fuse box before making the electrical connection.

This appliance must be connected to a grounded, metallic, permanent wiring system, or a grounding connector should be connected to the grounding terminal or wire lead on the appliance. Failure to do any of the above could result in a fire, personal injury or electrical shock. See below for more information on electrical grounding.

A. Remove the 4 lower terminal screws from the terminal block.
B. Insert the Green ground terminals together with white one.
C. Insert the 3 terminal screws through each power cord terminal and into the lower terminals of the terminal block. Be certain that match the wire and terminals by color.
D. Tighten screws securely into the terminal block.

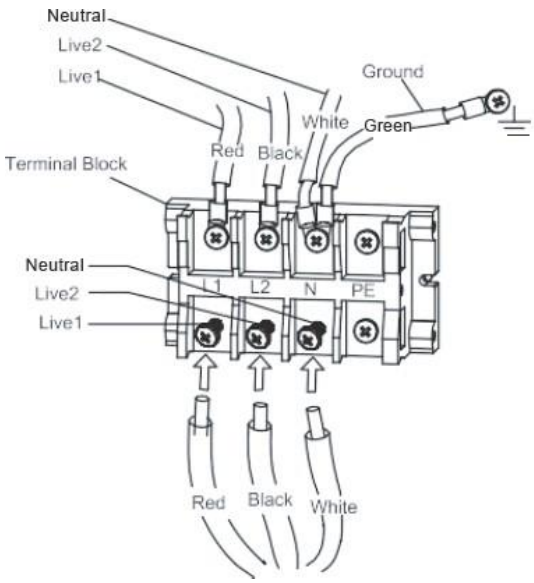

CAUTION

You must check voltage after connecting power cord.

Live 1 - Neutral	120 V
Live 2 - Neutral	120 V
Live 2 - Live 2	240 V

STEP 5. REPLACING THE TERMINAL BLOCK COVER
Replace the terminal block cover on the range back and tighten the screw.

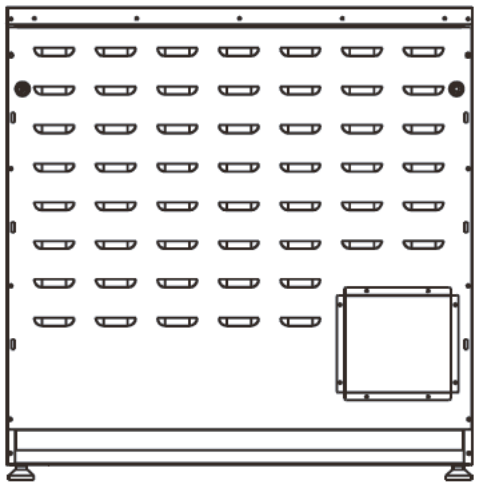

INTRODUCING YOUR NEW RANGE

What's included with your range



1x Oven rack
1x Telescopic oven rack
1x Grid
1x Broiler pan

Before you begin

Clean the oven thoroughly before using it for the first time. Then, remove the accessories, set the oven to bake, and then run the oven at 350 °F for 30 minutes. There will be a distinctive odor. This is normal.
Ensure your kitchen is well ventilated during this conditioning period.

Energy saving tips

- During cooking, the oven door should remain closed except when you turn food over. Do not open the door frequently during cooking to maintain the oven temperature and to save energy.
- Whenever possible, cook more than one item at a time.

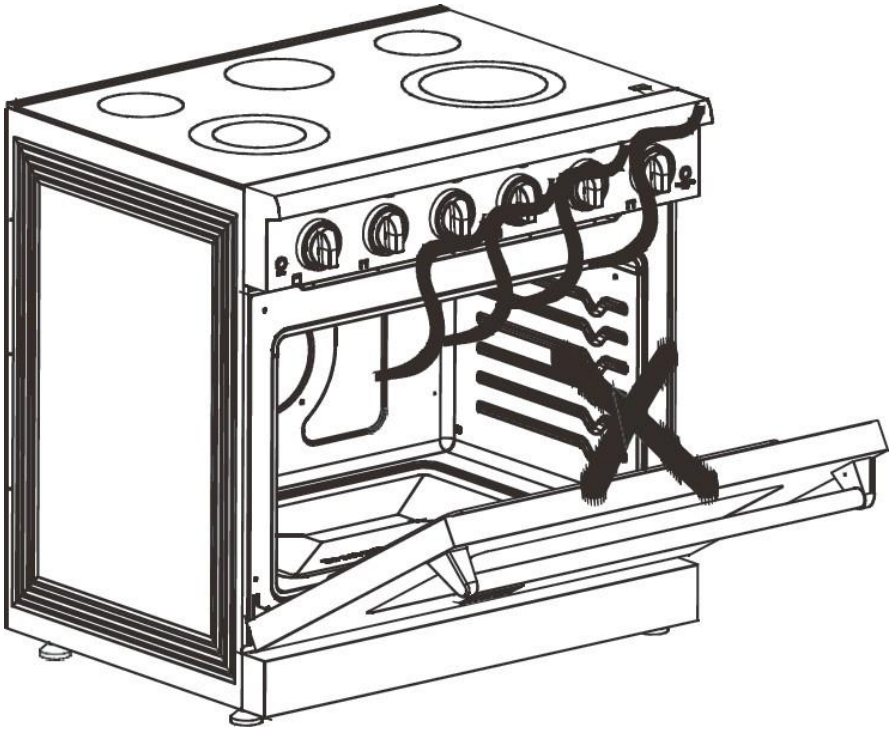

COOKTOP COOKING

CAUTION

BEFORE COOKING

- Do not use the glass cooktop surface as a cutting board.
- Do not place or store items that can melt or catch fire on the glass cooktop, even when it is not being used.
- Turn the surface units on only after placing cookware on them.
- Do not store heavy items above the cooktop surface. They could fall and damage it.

CAUTION

DURING COOKING

- Do not place aluminum foil or plastic items such as salt and pepper shakers,spoon holders, or plastic wrappings on the range when it is in use. The hot air from the vent could melt plastics or ignite flammable items.
- Make sure the correct surface unit is turned on.
- Never cook directly on the glass. Always use cookware.
- Always place the pan in the center of the surface unit you are cooking on.
- Never leave surface units unattended while using a high heat setting.Boilovers cause smoking and greasy spillovers that may catch on fire.
- Turn the surface units off before removing cookware.
- Do not use plastic wrap to cover food. Plastic may melt onto the surface and be very difficult to remove.

CAUTION

AFTER COOKING

- Do not touch the surface units until they have cooled down.
- The surfacemay be still be hotandburnsmay occurif youtouchtheglass surface before it has cooled down sufficiently.
- Immediately clean spills on the cooking area to prevent a tough cleaners, chorelater.

About the radiant surface elements

The temperature rises gradually and evenly. As the temperature rises, the radiant element will glow red.

To maintain the selected setting, the element will cycle on and off. The heating element retains enough heat to provide a uniform and consistent heat during the off cycle. For efficient cooking, turn off the element several minutes before cooking is complete. This will allow residual heat to complete the cooking process.

NOTE

Radiant elements have a limiter that allows the element to cycle ON and OFF, even at the HI setting.This helps to prevent damage to the ceramic cooktop. Cycling at the HI settingis norma land can occur if the cookware is too small for the radiant element or if the cookware bottom is not flat.

COOKTOP COOKING

Location of the radiant surface elements and controls

The radiant control knobs operate the radiant surface elements on the cooktop as shown below.

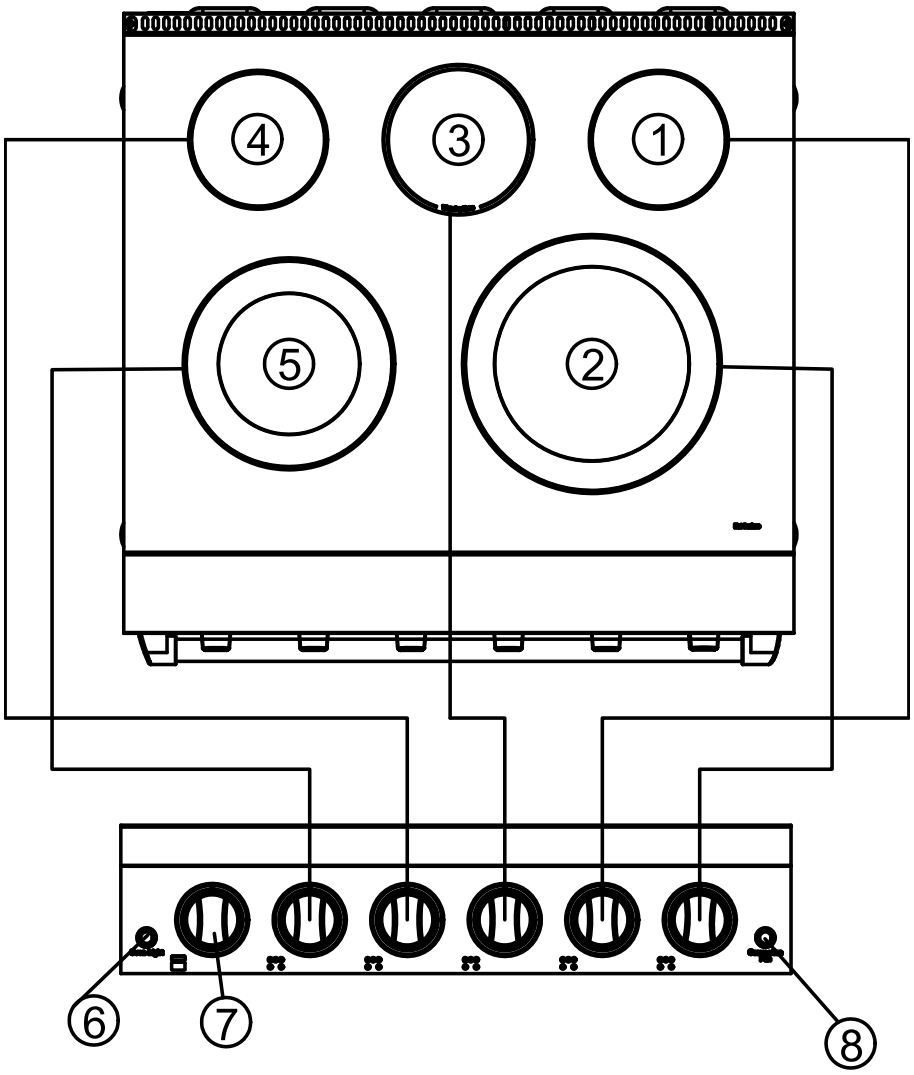

①:Rear Right(1200W-Single)
②:Front Right(3000W-Dual)
③:Middle(100W-Keep Warm)
④:Rear Left(1200W-Single)
⑤:Front Left(3000W-Dual)
⑥:Oven Light Button
⑦:Oven Button
⑧:Convection Fan Button

COOKTOP COOKING

Cooking areas

The cooking areas on your range are identified by permanent circles on the glass cooking surface. For the most efficient cooking, fit the pan size to the element size. Pans should not extend more than .5 to 1 in. (1.3 to 2.5 cm) beyond the cooking area. When a control is turned on, you can see a glow through the glass cooking surface.The element cycles on and off to maintain the preset heat setting, even at high settings. For more information about the correct types of cookware, see Using the correct cookware on page 25.

Using a surface burner control knob

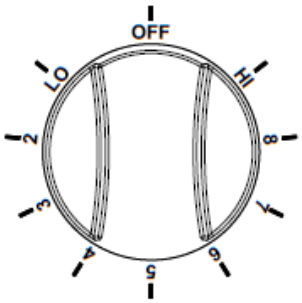

Single (Rear Left , Rear Right)

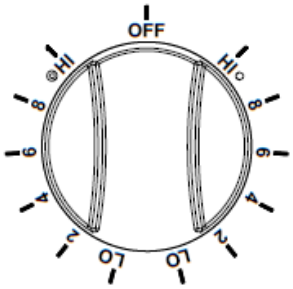

Dual (Front Left , Front Right)

1 Push the knob in.
2For the left and right rear burners, turn knob in either direction to the setting you want.
3 For the left and right front dual burners,turn in either direction to the setting you want

Using the correct cookware can prevent many problems, such as uneven cooking or extended cooking times. Look for the following pan characteristics:

- Flat bottom and straight sides
- Tight-fitting lid
- Weight of handle does not tilt pan
- Pan is well-balanced
- Pan size matches the amount of food being prepared and the size of the surface burner.
- Made of material that conducts heat well.

COOKTOP COOKING

What your cookware is made of determines how evenly and quickly heat is transferred from the surface burner to the pan bottom.

MATERIAL	DESCRIPTION
Aluminum	Excellent heat conductor. Some types of food cause aluminum to darken. (Anodized aluminum cookware resists staining and pitting.) If you slide aluminum pans across the ceramic cooktop, they may leave metal marks that resemble scratches. Remove these marks as soon as the cooktop cools down.
Copper	Excellent heat conductor, but discolors easily. If you slide copper pans across the ceramic cooktop, they may leave metal marks that resemble scratches. Remove these marks as soon as the cooktop cools down.
Stainless Steel	Slow heat conductor with uneven cooking results. It is durable, easy to clean, and resists staining.
Cast-iron	A poor conductor, but retains heat well. Cooks evenly once cooking temperature is reached. Not recommended for use on ceramic cooktops.
Enamelware	Heating characteristics vary depending on base material. Porcelain enamel coating must be smooth to avoid scratching ceramic cooktops.
Glass	Slow heat conductor. Not recommended for ceramic cooktops because it may scratch the glass.

Protecting the ceramic cooktop

Cleaning

- Clean the cooktop before using it for the first time.
- Clean your cooktop daily or after each use. This helps keep your cooktop looking good and can prevent damage.
- If a spillover occurs while you are cooking, immediately clean the spill from the cooking area while it is hot to prevent a tough cleaning chore later. Using extreme care, wipe the spill with a clean dry towel.
- Do not let spills remain on the cooking area or the cooktop trim for a long period of time.
- Do not use abrasive cleansing powders or scouring pads because they can scratch the cooktop.
- Do not use chlorine bleach, ammonia, or other cleansers not specifically recommended for use on a glass ceramic surface. Preventing marks and scratches
- Do not use glass cookware. It may scratch the cooktop.
- Do not place a trivet or wok ring between the cooktop and the pan. These items can mark or scratch the cooktop.
- Make sure that the cooktop and the pan bottoms are clean.
- Do not slide metal pans across the cooktop. Preventing stains
- Do not use a soiled dish cloth or sponge to clean the cooktop surface. They may leave a film, which may cause stains on the cooking surface after the area is heated.
- Continuously cooking on a soiled surface can result in a permanent stain. Preventing other damage
- Do not let plastic, sugar, or foods with high sugar content melt onto the hot cooktop. Should this happen, clean immediately.
- Do not let a pan boil dry. This may damage the cooktop and the pan.
- Do not use the cooktop as a work surface or cutting board.

POSITIONING THE OVEN RACKS

You can remove and reposition the oven racks in any of the six rack positions. Each oven rack has a built-in stop to prevent it from accidentally being pulled completely out. Correct positioning of the oven racks provides the best cooking results.

WARNING
Stand away from the oven when opening the oven door. Escaping hot air or steam can burn your hands, face, or eyes. Let hot air or steam escape before removing or replacing food.

NOTE
The rack position above 6 is not usable.

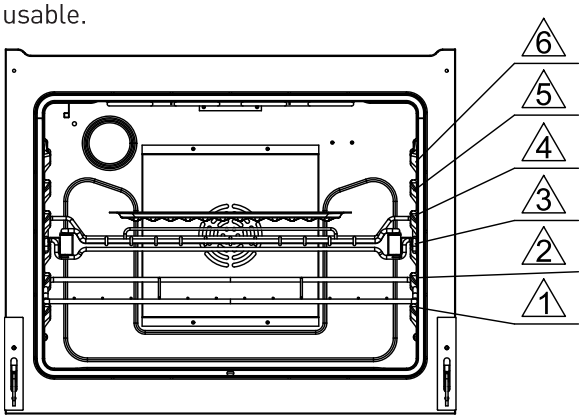

- Centering the baking pans in the oven produces better cooking results.
- When baking multiple items, make sure that you leave a 1 to 1.5 in. (2.5 to 3.8 cm) space around each item.
- When baking or fan baking on a single rack, place the oven rack in positions 3 or 4.
- When baking or fan baking on multiple racks, place the oven racks in positions 3 and 5. Place two pans in the rear of the top rack and the other two pans in the front of the bottom rack.

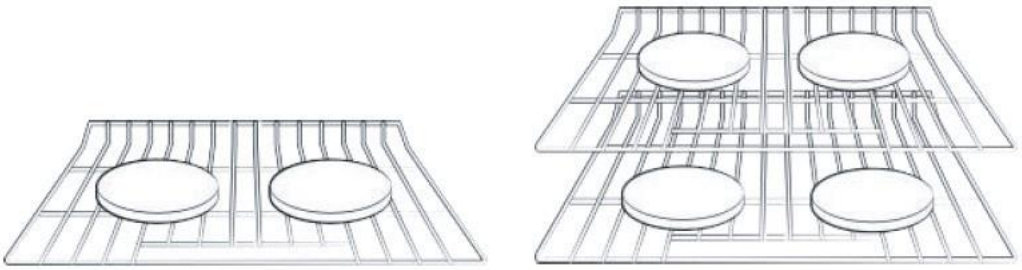

CAUTION
- Do not cover an oven rack with aluminum foil. This disturbs the heat circulation and results in poor baking.
- Do not place aluminum foil on the oven bottom because it could cause damage.
- Arrange the oven racks only when the oven is cool.
- When placing an oven rack in the top most rack position, make sure that the rack is stably situated on the embossed stop.

Removing an oven rack
1 Pull the rack straight out until it stops.
2Lift the front of the oven rack and pull to remove it from the oven. Replacing an oven rack
1 Place the back edge of the rack on the a rack support.
2 Lift the front of the rack and slide it into the oven.

OPERATING THE OVEN

Oven Burner Use

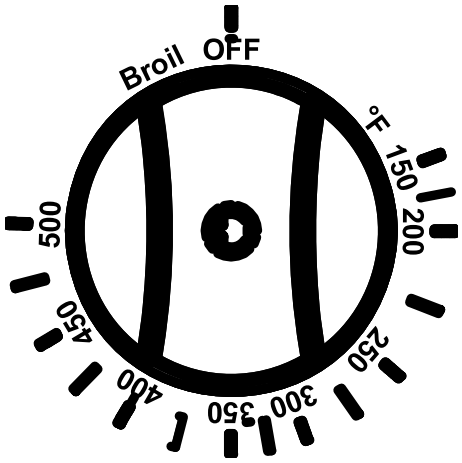

Oven Temperature Knob

To light the oven burner, push and turn the appropriate control knob counterclockwise to
the (150°F~500°F) position. Once burner ignition has been achieved, turn the burner control knob to adjust the desired temperature setting.
Do not push and turn the control knob clockwise from the “OFF” position.
Do not turn the control knob without pushing it.

Broil Bumer Use

To light the broiler burner, push and turn the appropriate control knob counterclockwise
to the broil position.
Do not push and turn the control knob clockwise from the “OFF” position.
Do not turn the control knob without pushing it.

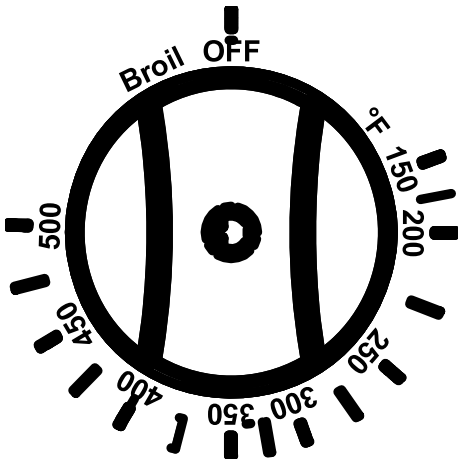

OPERATING THE OVEN

Oven Cooking Safety Guidelines

√ Do not block the ducts on the rear of the range when cooking in the oven. It is important that the flow of moist warm air from the oven and fresh air into the oven burner never be interrupted. Avoid touching the vent opening or nearby surfaces during oven or broiler operation because they are hot. Do not pace plastics, paper or other items that could melt or burn near the oven vent.
√ Use all the oven modes with the oven door closed.
√ Never use aluminum foil to cover the oven shelves or to line the floor of the oven. The trapped heat can irreversibly damage the enamel and may even cause afire.
√ Do not place water, ice, or any dish or tray directly on the oven floor, as this will irreversibly damage the enamel.
√ Do not cover the slotted grid of the broil/roast pan with aluminum foil. This will catch the grease and could cause fire.
√ Do not use plastic wrap or wax paper in the oven.
√ For food safety reasons, do not leave food in the oven for longer than two hours before and after cooking or defrosting. This is to avoid contamination by organisms which may cause food poisoning. Take care during warmer weather.

WARNING

√ According to the United Sates Department of Agriculture: DO NOT hold foods at temperatures between 40°F to 140°F more than 2 hours. Cooking raw foods below 275°F is not recommended.
√ Never cover any slots, holes or passages in the oven bottom or cover an entire rack with materials such as aluminum foil. Doing so blocks air flow through the oven and may cause carbon monoxide poisoning. Aluminum foil lining may also trap heat, causing a fire hazard.

OVEN FUNCTION

Natural Airflow Bake
Natural airflow bake occurs when heat is transferred into the oven from the bake burners in the bottom of the oven cavity. Heat is then circulated by natural airflow. This is a traditional bake setting.

Convection Bake
The oven convection fan circulates and distributes the heat in the oven for faster even cooking.

Convection cooking allows you to bake more items on multipleracks.

To bake using the convection fan:

1.Position the oven bottom cover and the oven shelves before using oven. 2.Remove any

unused shelves and baking utensils from the oven.

3. Preheat the oven to the temperature stated in the recipe. Depending on the temperatureand the size of the oven, preheating will vary. For better cooking performance and exact oven cavity temperature, preheating time will be 10 mins per 100 Degrees.

4. Arrange pans and food items evenly on the shelves. Make sure pans do not touch each other or the sides of the oven. When baking a single item, always center the item on the oven shelf. If baking on multiple shelves, make sure you stagger items on the shelves so that one is never directly above another.

5. When baking using convection, either reduce the temperature stated in the recipe and leave the baking time unchanged or reduce the baking time by several minutes and leave the temperature unchanged. For foods with a baking time of over an hour, reducing both the temperature and time slightly may give the best results.

6. Dark metal baking pans or those with a dull finish absorb heat faster than shiny pans, and are excellent for pies and breads, or anything that needs browning or a crisper crust.

7. A shiny finish may work best for foods that require lighter, delicate browning (e.g. cakes and cookies), as it reflects some heat and gives a less intense bakingsurface.

8. Avoid opening the oven door frequently during baking.

* For best results use the broiler pan. The pan is used to catch grease spills and has a cover to prevent grease splatter.
* The convection fan circulates heated air over and the around the food being roasted, sealingjuices quickly for a moist and tender product while, at the same time, creating a rich golden-brown exterior.
* Use the broil/roast pan and slotted grid supplied with the range when roasting to elevate the meat on a metal roasting rack. This allows hot air to circulate around the meat, browning it more evenly like a rotisserie. A suitable roasting rack can be purchased through your HRG distributer or by calling Customer Care.
* When roasting larger items like a whole turkey, use only the pan and grid for greater stability.

Convection Defrost

With temperature control off, a motorized fan in the rear of the oven circulates air. The fan accelerates natural defrosting of the food without heat. To avoid illness and food waste, do not allow defrost food to remain in the oven for more than two hours without being cooked.

Defrosting

To thaw uncooked frozen food, set the oven temperature to 100-150°F. Once thawed, cook the food immediately and do not refreeze.
To prevent liquid from thawing food dripping on the oven floor, be sure any uncooked food is tightly wrapped in foil and/or placed in a heat proof container.

Convection Dehydration

With the temperature control on 175°F, warm air is radiated from the bake burners on the bottom of the oven cavity and is circulated by a motorized fan in the rear of the oven.
The food dries by evaporation. Drying foods inhibits microbial growth and retains certain enzymes.

Broiler Operation

CAUTION

Door must be closed during broiler operation.
Broiling is a method of cooking tender cuts of meat directly under the infrared broiler in the oven. Broiling in the oven is accomplished with the oven door closed. It is normal and necessary for some smoke to be present to give the food a broiled flavor.
If you open the oven door to check the food, have it open for as short a time as possible. This is to prevent the control panel from overheating and prevents meltedknobs.
Use both the broil/roast pan and slotted grid supplied. The grid helps to reduce smoking and splatter by letting grease drip into the bottom of the pan, away from intense heat. To prevent food sticking, spray the grid with a light coating of non-stick cookingspray.

Preheating

Preheating is suggested when searing rare steaks (Remove the broiler pan before preheating with the infrared broiler. Foods will stick to hot metal). To preheat, turn the "Oven" selector knob to the "Broil" position. Wait for the burner to become hot, approximately 2 minutes. Preheating is not necessary when broiling meat well-done.

To Broil

Broil one side until the food is browned; turn and cook on the second side. Season and serve.
Always pull the rack out to the "stop" position before turning or removing food.

Setting Broil

The "Oven" selector knob controls the Broil feature. When broiling, heat radiates downward from the oven broiler for even coverage. The Broil feature temperature is 500°F (260°C).
The broil pan and insert used together allow dripping grease to drain and be kept away from the high heat of the oven broiler. DO NOT use the broil pan without theinsert.
DO NOT cover the broil pan insert with foil. The exposed grease could catch fire. To set the oven to Broil:
1. Place the broiler pan insert on the broiler pan. Then place the food on the broiler pan insert.
2.Arrange the interior oven rack and place the broiler pan on the rack. Be sure to center the broiler pan and position directly under the broil burner. If preheating the broil burner first, position the broiler pan after the broil burner is preheated.
3. Turn selector knob to Broil.
The oven indicator light will remain on until the selector knob is turned to the off position or the temperature control cycles off.

To Broil

Broil one side until the food is browned; turn and cook on the second side. Season and serve.
Always pull the rack out to the "stop" position before turning or removing food.

Broiling guidelines

Choose a suitable shelf position. To ensure that meat is cooked through rather than just browned on the outside, broil thick pieces of meat and poultry on shelf positions 2 or 3. Use shelf position 4 for thinner items that need less cooking time like steaks, chops, or hamburger patties.
When finishing off meals by browning the top under the broiler, use metal or glass-ceramic bakeware. Do not use heatproof glass or earthenware, as these cannot withstand the intense heat of the broiler.
Center the item in the oven, so that it is directly under the broiler.

CLEANING & MAINTANANCE

WARNING

- Always make sure that the controls are off and all surfaces are cool before removing or cleaning any of the range parts. This will prevent you from getting burned.
- If your range is pulled out from the wall for any reason, make sure that the anti-tip device is reengaged after your range has been pushed back into place. Failure to take this precaution could result in your range tipping and personal injury.

Cleaning stainless steel surfaces CAUTION

Do not use a steel-wool pad or abrasive cleaners on stainless steel surfaces. Abrasive pads and cleaners will scratch the surface and damage the finish.

NOTE

To prevent any discolorations or grease stains, we recommend that you clean and remove any spills, spots, and grease from your range after each use.
1.Place a small amount of a stainless steel appliance cleaner or polish on a damp cloth or damp paper towel.
2.Clean a small area, rubbing with the grain of the stainless steel, if applicable. 3.Dry and buff with a clean, dry paper towel or soft cloth.
4.Repeat as necessary.

CAUTION

•Do not use a steel-wool pad or abrasive cleaners on stainless steel surfaces. Abrasive pads and cleaners will scratch the surface and damage the finish.
•If you previously used a mineral oil-based stainless steel appliance cleaner, wash the surface with dish washing liquid and water before using the stainless steel cleaner or polish.

Cleaning the oven racks

Clean by hand in hot, soapy water with a plastic or soap-filled scouring pad, then dry with a soft cloth.
If a rack becomes difficult to slide, rub the side rails with wax paper or a cloth containing a small amount of cooking oil. This helps the rack slide more easily in the tracks.

CLEANING & MAINTANANCE

Cleaning the oven door

CAUTION

- DO NOT clean the oven door gasket. The oven door gasket is made of a woven material which is essential for a good seal. Care should be taken not to rub, damage, or remove this gasket.
- DO NOT immerse the door in water.
- DO NOT spray or let water or the glass cleaner to enter the door vents.
- DO NOT use oven cleaners, cleaning powders, or any harsh abrasive cleaning materials on the outside of the oven door.

The oven door has multiple surfaces that require different cleaning techniques.

The gasket on the oven door frame should never be cleaned or moved to clean other surfaces. The gasket is made of woven material which is essential for a good heat seal.

1. Clean the inside door surface by hand with hot, soapy water and a soapy plastic scouring pad. Do not let moisture get inside the door assembly.

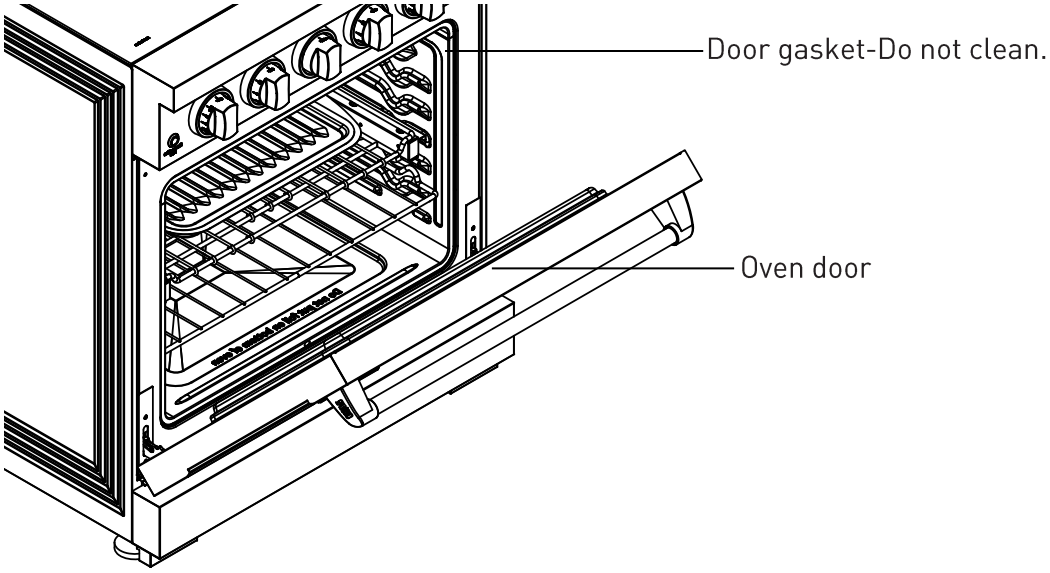

2. Rinse and dry thoroughly with a clean, soft cloth.
3. Clean the outside door stainless steel surfaces by following the instructions in Cleaning stainless steel surfaces on page 35.
4. Clean the glass window with glass cleaner or warm, soapy water with a thorough rinse. Do not let moisture get inside the door assembly.

CLEANING & MAINTANANCE

Cleaning the surface burner control knobs

WARNING

Do not use spray cleaners on the surface burner control panel. Spray entering the valve holes could contact electrical components resulting in death, personal injury, or product damage.

1. Make sure that all surface burner knobs are in the OFF position.
2. Pull the control knobs straight off the surface burner control valve stems. Do not clean the control knobs in a dishwasher. They are not dishwasher-safe.
3. Clean the knobs in warm, soapy water. Rinse and completely dry all surfaces (including back and stem hole).
4. Clean stainless steel surfaces with a stainless steel cleaner on a damp, soft cloth. 5. Replace the control knobs in the OFF position by pushing them straight onto the control valve stems.

Cleaning the cooktop

The cooktop surface is a porcelain-enamel surface. To prevent this surface from becoming dull, wipe up and clean spills as they happen. Foods with a lot of acid (for example, tomatoes, sauerkraut, and fruit juices) or foods with high sugar content can cause dull spots if allowed to set.

CAUTION

- Do not use a steel-wool pad or abrasive cleaners on stainless steel surfaces. Abrasive pads and cleaners will scratch the surface and damage the finish.
- Carefully check the bottoms of pans for roughness that may scratch the cooktop.

Normal daily use cleaning

NOTE

Daily use of a ceramic cooktop cleaner helps keep the cooktop looking new.
Use only a ceramic cooktop cleaner. Other creams may not be as effective. Byfollowing these steps, you can maintain and protect the surface of the glass cooktop.
Before using the cooktop for the first time, clean it with a ceramic cooktop cleaner. This helps protect the top and makes cleanup easier.

1. Shake the cleaning cream well, then apply a few drops of cleaner directly on the cooktop.
2. Use a paper towel or a cleaning pad for ceramic cooktops to clean the entire cooktop surface.
3. Use a dry cloth or paper towel to remove all cleaning residue. You do not need to rinse.

Cleaning sugary spills and melted plastics

NOTE

If pitting or indentations in the glass surface have already occurred, they can't be repaired.The cooktop glass will have to be replaced.

Sugary spillovers (such jellies, fudge, candy, and syrups) or melted plastics can cause pitting of the cooktop surface. This is not covered under the warranty.

You should clean the spill while it is still hot. Take special care when removing hot substances.

When using a scraper, make sure that it is new and the razor blade is still sharp. Do not use a dull or nicked blade.

1. Turn off all surface burners. Remove hot pans.
2.Wearing an oven mitt, use a single-edge, razor-blade scraper to move the spill to a cool area of the cooktop. Remove the spill with paper towels.
3. Wait until the cooktop has cooled, then remove any remaining spillover.
Don't use the surface burners again until all of the residue has been completely removed.

Removing burned-on residue

1.Make sure that all surface burners are turned off, then let the cooktop cool. 2.Spread a few drops of ceramic cooktop cleaner on the entire burned residue area.
3.Using a cleaning pad for ceramic cooktops, rub the residue area. Apply pressure as needed.
4. If any residue remains, repeat the steps listed above as needed.
5.For additional protection, after all residue has been removed, polish the entire surface with a ceramic cooktop cleaner and a paper towel.

Removing heavy, burned-on residue

1. Make sure that all surface burners are turned off, then let the cooktop cool.
2.Use a single-edge, razor-blade scraper at approximately a 45° angle against the glass surface and scrape the residue.
You need to apply remove the residue. Do not scrape the seal.
3.After scraping with the scraper, spread a few drops of ceramic cooktop cleaner on the entire burned residue area. Use the cleaning pad to remove any remaining residue.
4.For additional protection, after all residue has been removed, polish the entire surface with a ceramic cooktop cleaner and a paper towel.

Cleaning the cooktop seal

•Lay a wet cloth on the seal for a few minutes, then wipe clean with a nonabrasive cleaner.

REMOVING AND REPLACING THE OVEN DOOR

Removing and Replacing the Oven Door

Do not lift the oven door by its handle. Doing so may damage the door.
Make sure the oven and the door are cool before you begin to remove the door.

IMPORTANT

Before removing the door, ensure there is a large, clean, and protected surface in the kitchen to rest the door on.

Caution: The oven door is heavy.

Removing the oven door

1. Open the door very carefully

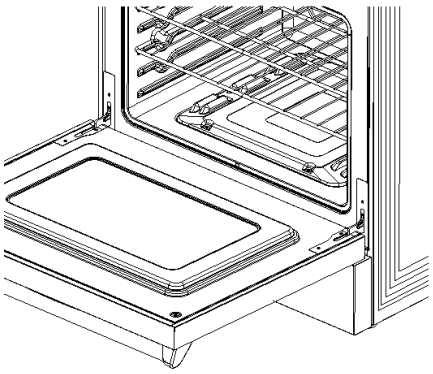

2. Open the levers fully on both sides.

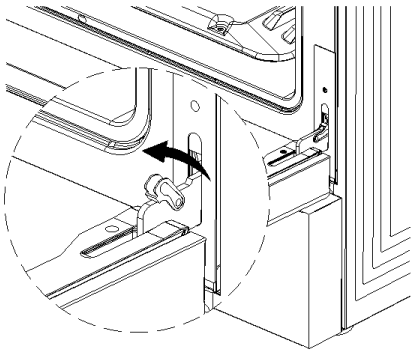

3. Hold the door firmly on both sides.

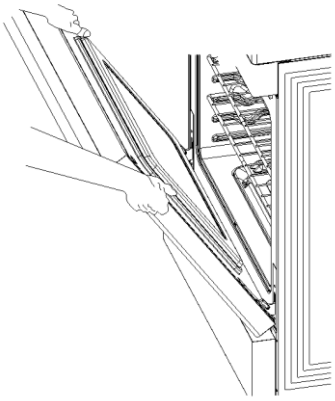

4. Disengage the hinges and remove the door; gently close it about halfway; place the door on a protected surface.

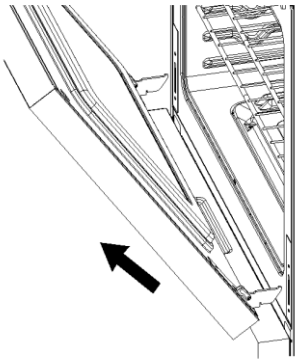

REMOVING AND REPLACING THE OVEN DOOR

Replacing the Oven Door

1. Hold the door firmly in an approximately open position.

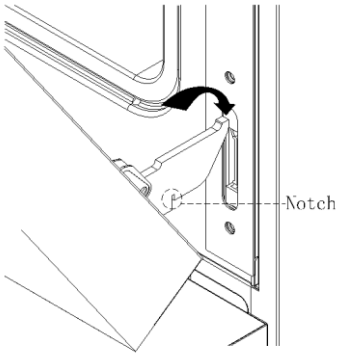

2. Insert the hinge tongues into the slots making sure that the notches on bothsides drop into place as shown.

3. Open the door fully.

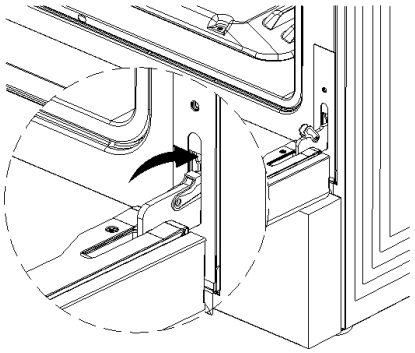

4. Fully close the levers on the left and right hinges,then close the door.

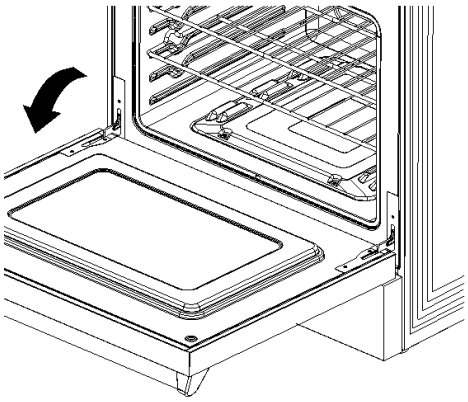

TROUBLE SHOOTING

Thorkitchen works hard to ensure that you don't have problems with your new gas range. If you experience a problem, look first for a solution in the table below. If, after trying the suggested solution, you're still having trouble, call Thorkitchen at 877-288-8099.

Installtion

Problem	Possible cause	Solution
The range is not level.	The appliance has been installed improperly.	• Place the oven rack in the center of the oven. Place a levelon theoven rack. Adjust the leveling legs atthe base of the range until the oven rack is level. • Insure the floor is level and strong and stable enough to adequately support the range.
	The floor is sagging or sloping.	Contact a carpenter to correct the situation.
	The kitchen cabinets are not properly aligned and make the range appear to be not level.	Insure the cabinets are square and provide sufficient room for installation.
The appliance must be accessed for servicing and cannot be moved easily.	The kitchen cabinets are not square and too close to the appliance.	Contact a builderor installer to make the appliance accessible.
	Carpet is interfering with movement of the range.	Provide sufficient space so the range can be lifted over the carpet.

COOKTOP

Problem	Possible cause	Solution
The surface units will not maintain a rolling boil or will not cook fast enough.	You may be using inappropriate cookware.	Use pans which are flat and match the diameter of the surface unitselected.
	In some areas, the power (voltage) may be low.	Cover the pan with a lid until the desired heat is obtained.
The surface units will not turn on.	A fuse in your homemay be blown or the circuitbreaker tripped.	Replace the fuseor reset the circuit breaker.
	The cooktop controls are set improperly.	Check if the correct control is set for the surface unit you are using.
Are as of discoloration on the cooktop.	Food spillover was not cleaned.	Refer to the section on the care and cleaning of the glass cooktop

TROUBLE SHOOTING

Problem	Possible cause	Solution
Are as of discoloration on the cooktop.	The surface is hot and the model features a light-colored cooktop.	This is normal. The surface may appear discoloredwhen it is hot. This is temporary and will disappear as the glass cools.
The surface unit frequently cycles on and off. The surface unit stops glowing when changed to a lower setting.	The element will cycle on and off to maintain the power setting.	This is normal operation, and not a system failure. Use the oven as usual.
Scratches or abrasions on the cooktop surface.	The cooktop is being cleaned improperly.	Scratches are not removable. Tiny scratches will become less visible in time as a result of cleaning. Use ceramic glass top cleaning cream. Do notusechemicalorcorrosive agents. These agents may damage the surface of the product.
	Cookware with rough bottoms was used on the cooktop or there were coarse particles (eg. salt or sand) present between the cookware and the surface of the cooktop.	To avoid scratches, use the recommended cleaning procedures. Make sure cookware bottoms are clean before use, and use cookware with smooth bottoms.
	Cookware has been slid across the cooktop surface.	
Brown streaks or specks.	Boilovers have been cooked on to the surface.	• Wait until the surface coolsdown. Then, use a scraper to remove those impurities. Use the blade scraper to remove soil. • See the section onthe care and cleaning of the glass cooktop
Areas of discolo ration with metallic sheen.	Mineral deposits from water and food have been left on the surface of the cooktop.	• Remove using a ceramic-glass cooktop cleaning cream. • Use cookware with clean, dry bottoms. Clean the cooktopwith a ceramic cleaning agent regularly every week.
"Cracking" or "popping" sound.	This is the sound of the metal heating and cooling during both the cooking and self-cleaning functions.	This is normal operation, and not a system failure. Use the oven as usual.

TROUBLE SHOOTING

Oven

Problem	Possible causes	What to do
The oven doesn't work (no heating).	No power supply (oven light and halos do not come on either). No gas supply (gas ovens).	Check that the circuit breaker hasn't tripped and there is no power outage in your area. If there is a power outage, you cannot use the oven until power has been restored. The supply to the house may not be working or there may be an outage. Contact your local gas supplier.
One of the oven lights does not come on, but the oven works.	The light bulb is loose. The light bulb has blown.	If the bulb is loose, tighten it If the bulb has blown, replace it according to the instructions in section "Replace Oven Light Bulb"
Condensation around oven (e.g. on control panel or top of oven door.)	Food has high moisture content or local climate (temperature, humidity) is contributing to condensation.	Condensation is normal. You can wipe the drops off the control panel. If there is frequent or excessive condensation, make sure that cabinetry around the range is moisture-proofed.
Steam coming from oven vents at the back of the range.	Moisture from food evaporating during cooking.	This is normal, especially if you are cooking large quantities of food in the oven using a CONVECTION mode.
The convection fan does not come on in a CONVECTION mode.	Technical fault.	Contact your Authorized Service Center or Customer Care.
Oven will not heat	Oven settings are not corrected	Follow mode selection and clock settings as specified in Oven Operation section of the manual.
Foods over-cooked or under-cooked	Incorrect cooking time or temperature.	Adjust time, temperature, or rack position.
"Cracking" or "Popping" sound.	This is the sound of metal heating and cooling.	This is normal.
There is a power failure - can I still use the oven?	Power outage in your home or neighborhood.	The oven cannot be used until power is restored.
The oven is not cooking evenly	Large item like a turkey being cooked.	If you are cooking a large item, be prepared to turn it round during cooking. If two shelves are used, check that space has been left for the heat to circulate. When a baking tray is put into the oven, make sure that it is placed centrally on the shelf. Check that the door seal is not damaged. A dish of water when placed on the shelf should be the same depth all over. (For example, if it is deeper at the back, then the back of the range should be raised up or the front lowered.) If the range is not level, arrange for your supplier to level it for you.
Oven not coming on	Power supply interrupted	Is the power on? If not, there may be something wrong with the power supply. Is the range supply on at the circuit breaker?
Oven temperature getting hotter as the range gets older	Thermostat	If turning the temperature down using the oven control knob has not worked, or has only worked for a short time, then you may need a new thermostat. This should be fitted by a qualified service person

RUBBER PAD INSTALL ON BACK PANEL

To Prevent the range too close to the wall, there are 2 plastic pads offered with the user's manual, please find the accessories and follow the below steps:

1. check the installation kit packed with manual.

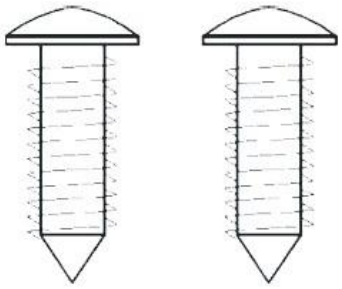

2 pcs screws



2 pcs rubber pad

2. Install 2 pcs rubber pad as showed above.

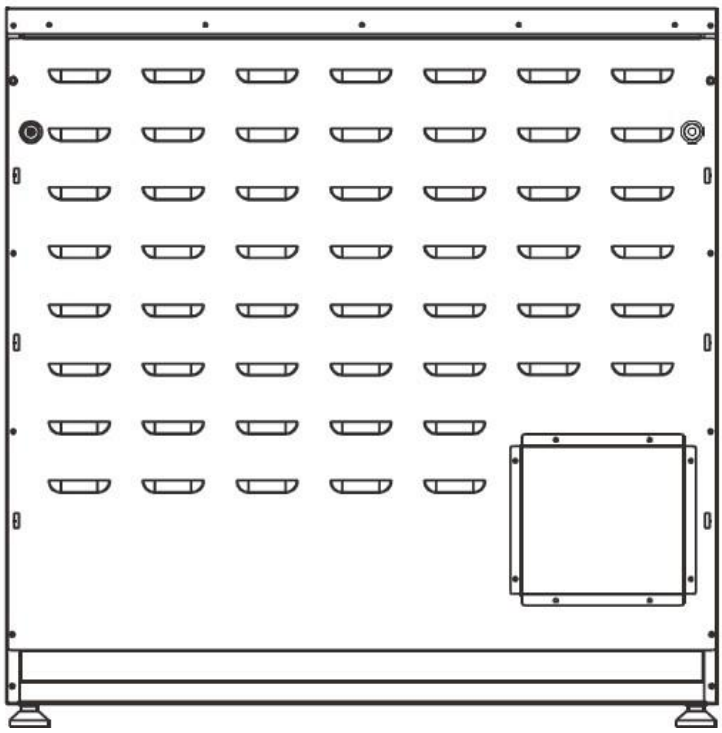

WARRANTY AND SERVICE

This product has been manufactured by Thor Group, 10830 Ada Ave Montclair, CA 91763 United States.

For the most up to date warranty and service policy, please refer to our website **WWW.THORKITCHEN.COM/WARRANTY-REGISTRATION**

For in-warranty service requests, please visit our website at **WWW.THORKITCHEN.COM/SERVICE**

Please Note: **You must provide proof of purchase or installation date for any inwarranty service requests**

We Stand Behind the Quality of Our Appliances.

Reliability and customer satisfaction are our top priorities. We offer a solid two-year warranty on both parts and labor. Enjoy professional-grade performance with the confidence that we've got you covered.

Warranty Registration Made Easy.

01 Scan the QR Code or visit thorkitchen.com/register-your-product.

02 Input your purchase and product information and select register.

03 That's it. You're all set. Enjoy!

Questions: service@thorinternational.com

WARRANTY

PARTS