ROVSUN

YPS5-14H

Portable Air Conditioner

User's Manual

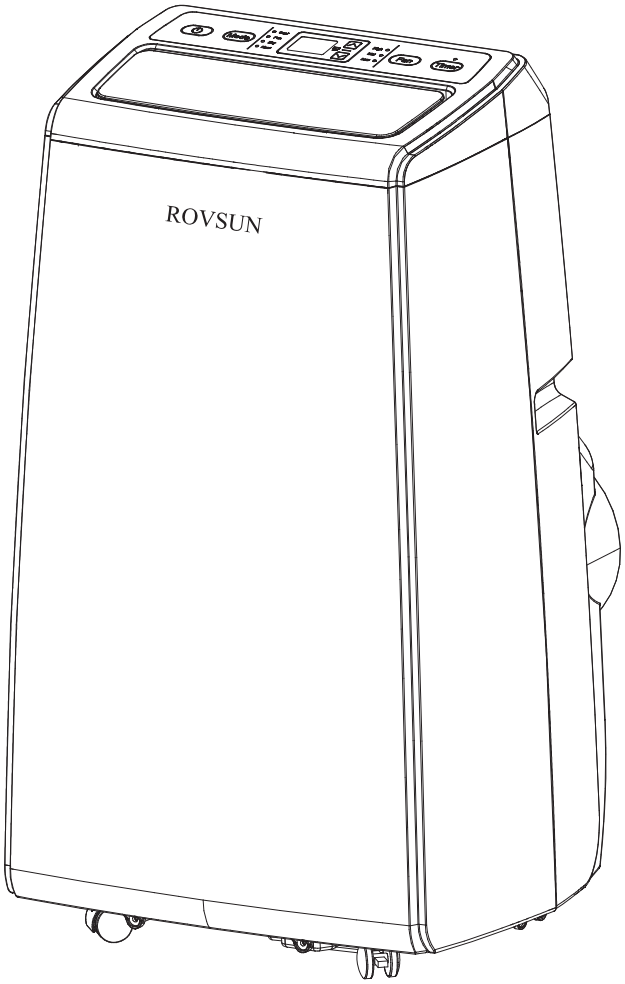

Thanks for choosing this high quality portable air conditioner. Please read the Manual carefully before operation. In case of any problem, please contact professional maintenance personnel in time.

CONTENT

User Knowledge

Matters Needing Attention 1
Important Safety Tips 3
Special Warning 6

Product Introduction

Main Parts and Components 7
Control Panel and Remote Controller 8

Product Operation

Placement and Installation 9
Operation Method 14

Clean and Maintenance

Drainage Method 15
Maintenance 15

Common Failures and Diagnosis

Intelligent Error Detection 18
Trouble-shooting 18

Machine Parts Parameters

Fuse Parameter 19
Machine Dimensions 19

USER KNOWLEDGE

The meaning of this user manual is shown bellow.

⊗	**Please prohibit such operation for your health and safety with your family.**
!	**For the sake of health and safety of your family, you must do the following.**

MATTERS NEEDING ATTENTION

This machine is for household use only.

This machine is for indoor use only Please place it in dry environment.

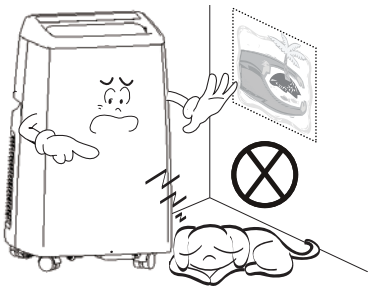

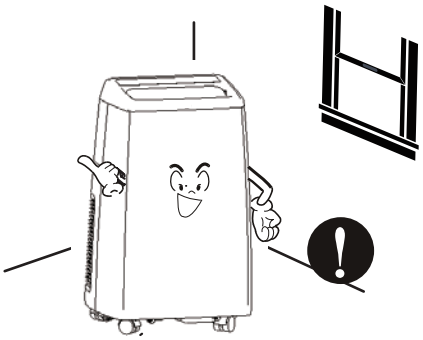

Do not stack items around the machine so as not to impede the air exchange.

Do not place heavy objects on the machine to avoid damage to the machine.

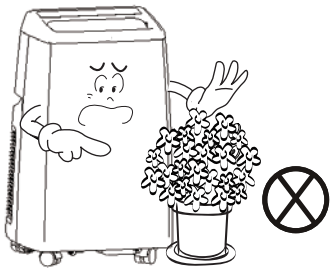

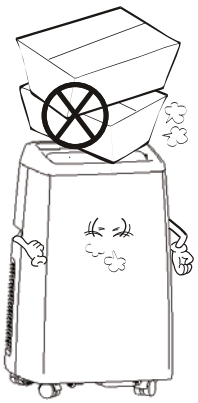

Do not operate the unit with wet hands or in a humid environment.

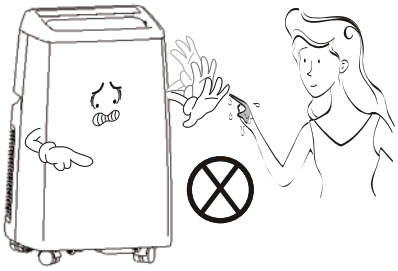

Please wipe the machine with a soft cloth. Do not use wax, thinner or irritant detergent.

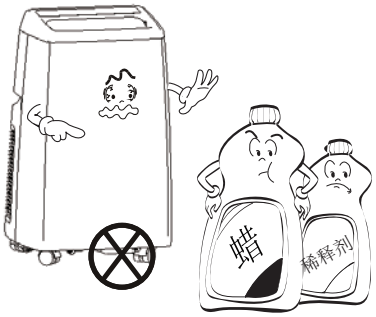

Please clean the filter regularly and recommend cleaning once every two weeks.

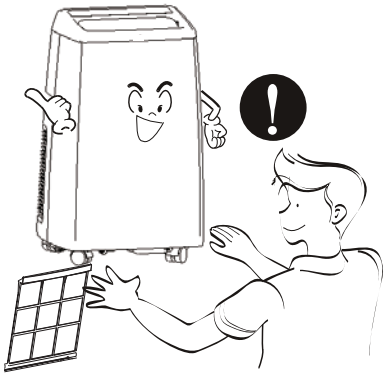

For your health, please don not drink condensed water discharged from machine.

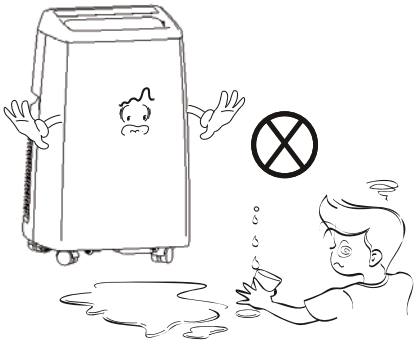

Please unplug the power supply if the machine is not used for a long time.

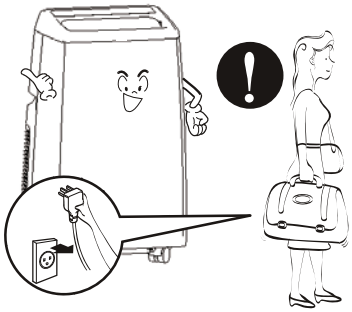

Non professionals should not disassemble or repair the machine without authorization.

IMPORTANT SAFETY TIPS

Please not use damaged power cord or power cord plug, do not insert power cord into loose socket.

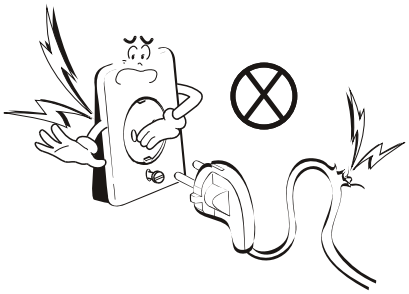

Do not damage or use damaged or unknown type of power cord. Please ensure that the voltage used meets the requirements before use.

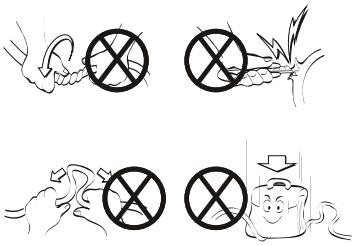

Do not modify or extend the power cord.

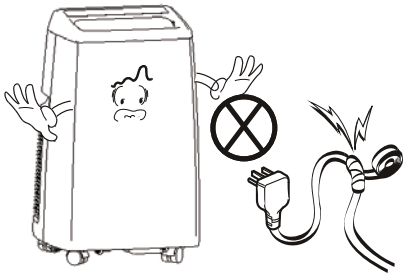

It is recommended to use grounding receptacles when running this unit.

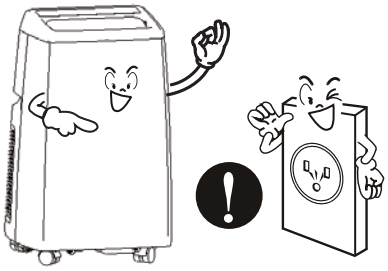

Do not plug or unplug the power cord with wet hands, this operation has the risk of causing electric shock.

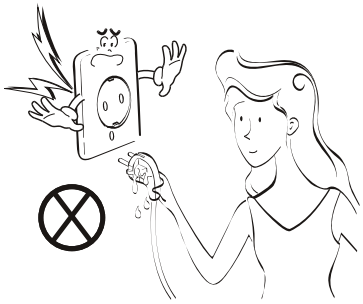

When pulling the power cord, please pinch the plug and do not pull the power cord.

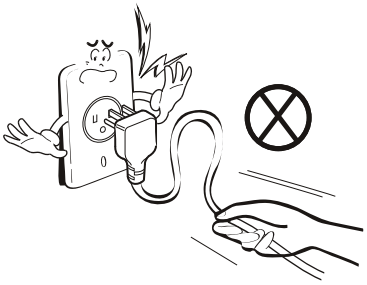

Do not control the opening and closing state of the machine by plugging the power plug.

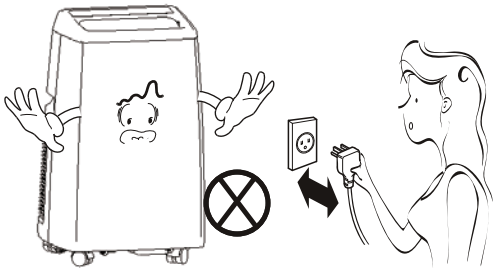

Please turn off the machine before you pulling the plug.

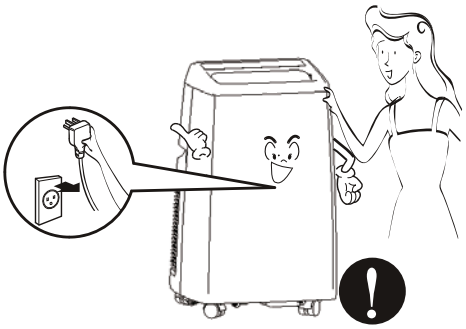

Do not share a power outlet with multiple high-power electrical appliances.

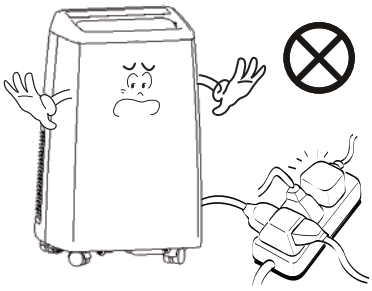

Please keep the machine away from the heat source and avoid direct sunlight.

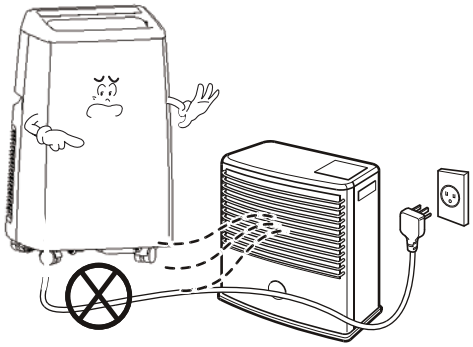

If the machine makes a strong noise, smell or smoke, please turn off the machine immediately and pull the plug to check the cause.

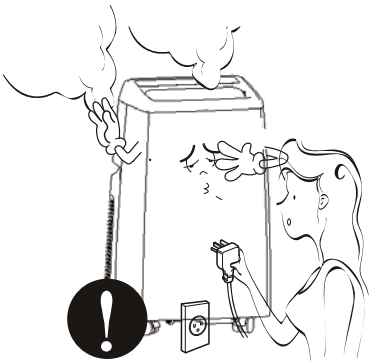

Do not press heavy objects on the power cord, so as to prevent the power cord from being crushed and cause electric shock.

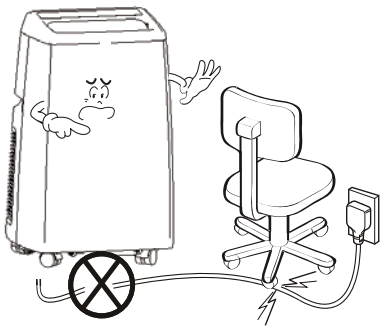

Don’t insert your fingers or any hard object to wind guide bar of the air outlet.

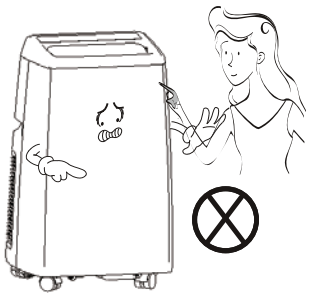

If water enters the machine, shut it down immediately and pull out the plug, then contact the professional maintenance personnel for repair.

When the gas leak occurs, please open the windows first, ensure the air circulation, then run the machine.

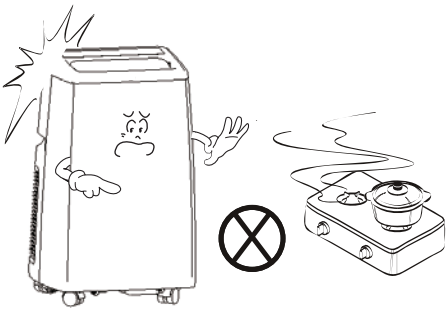

Do not let water enter the electrical part of the machine.

If you need to wipe, clean, move the machine or replace the machine parts, please turn off the machine and unplug the power plug first.

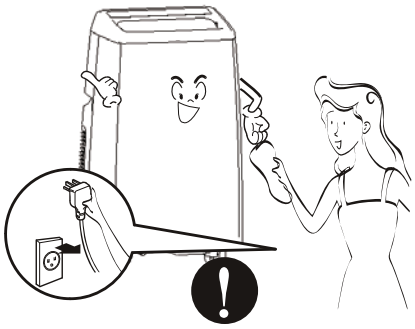

The appliance user must be eight years of age. Weak people, people with weak sensory abilities or low psychological quality must be supervised and used when they understand the correct use methods and harmfulness. Children are prohibited from playing. Children must be cleaned and maintained under supervision.

SPECIAL WARNING

Place the A/C on even ground and install it vertically, so as to ensure normal operation of the compressor.

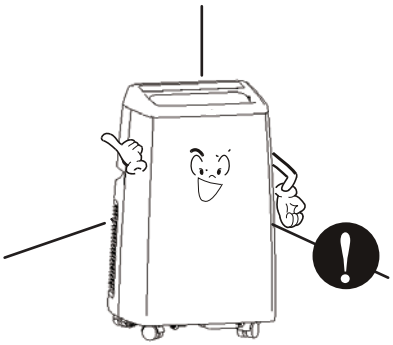

The A/C should be at least 19.7in. away from surrounding objects. Keep air inlet and outlet smooth.

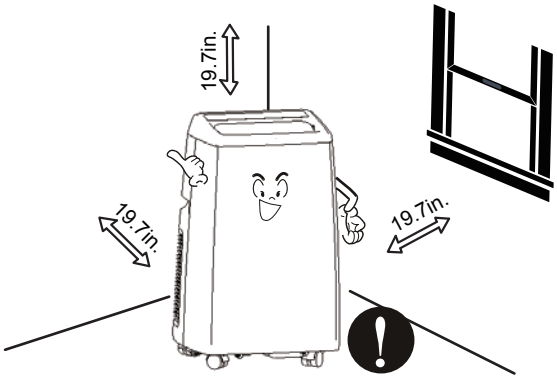

Don’t use the A/C beside gasoline or any other inflammable liquid.

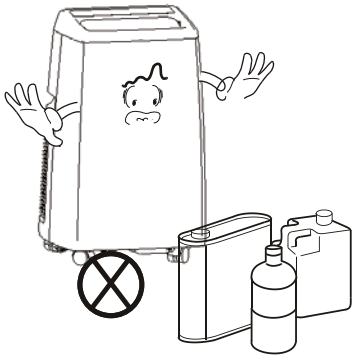

Don’t use spraying agent and other solvent or flammable substances near the A/C; otherwise, its plastic may deform and electric parts may be damaged.

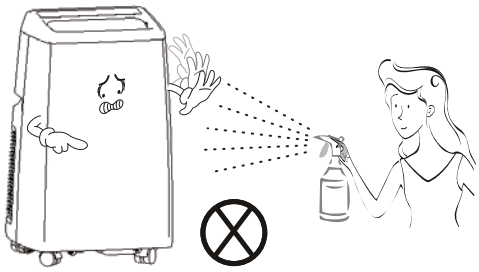

PRODUCT INTRODUCTION

MAIN PARTS COMPONENTS

1. Handle
2. Air inlet (Down)
3. Control Panel
4. Air outlet louver
5. Castor
6. Remote controller
7. Air outlet(Up)
8. Hot air outlet
9. Drainage nozzle
10. Air outlet grille
11. Exhaust duct assembly
12. Window sealing plate assembly

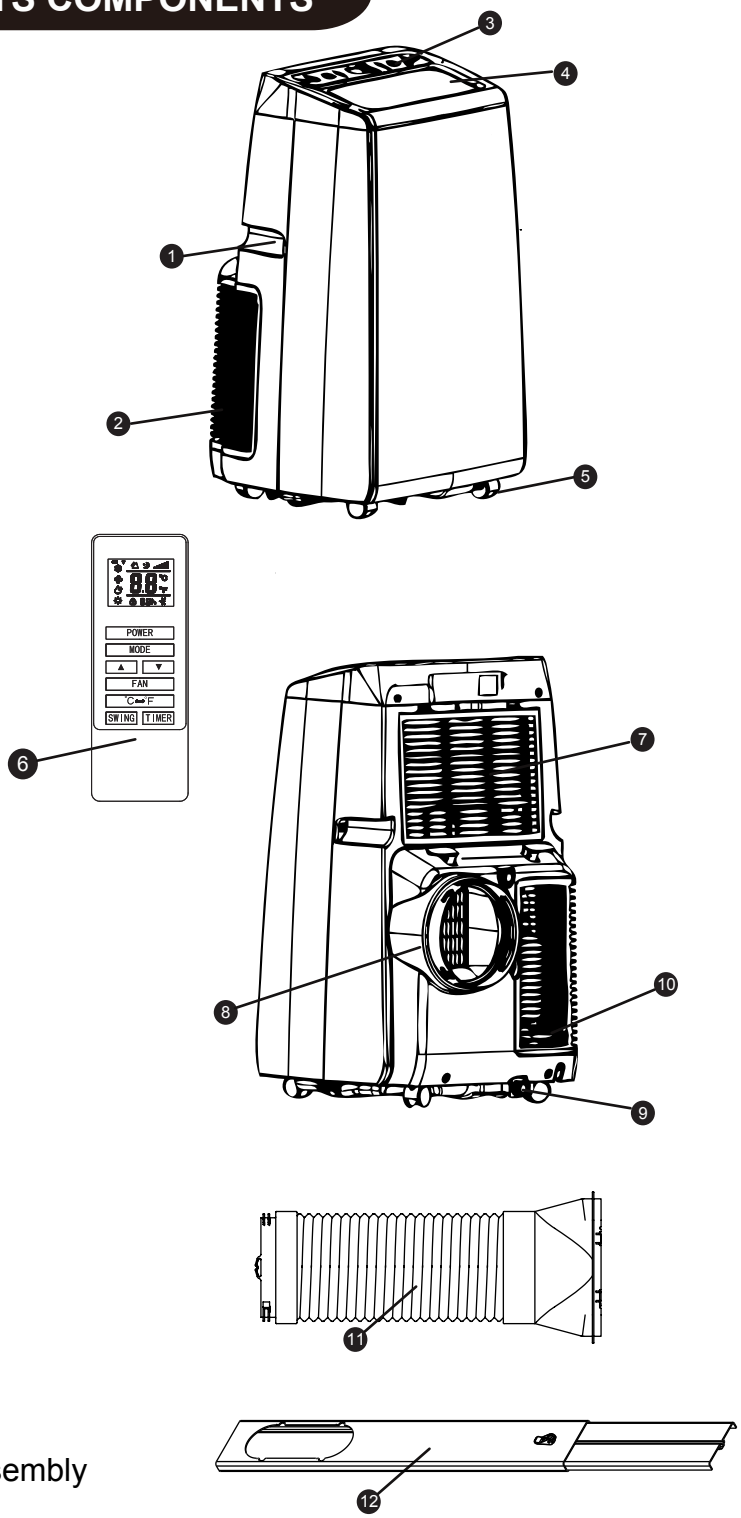

CONTROL PANEL AND REMOTE CONTROLLER

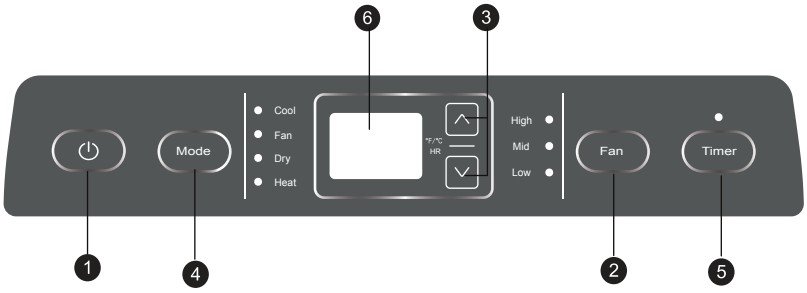

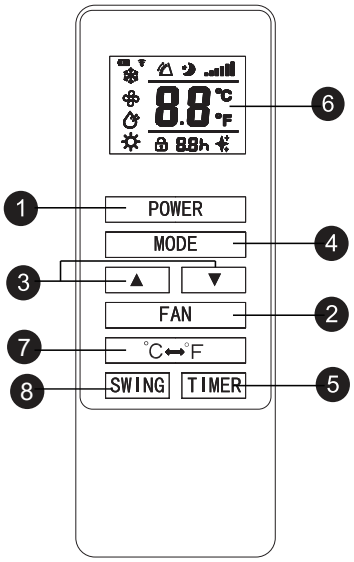

1 Power key

Press the key to turn ON/OFF the A/C.

2 Speed key

Press the key to choose high/middle/low speed.

3 Temperature/ time adjusting key

Press the key at cooling mode or heating mode to increase/reduce the setting temperature; press it at timing mode to adjust timing ON/OFF time.

4 Mode key

Press the key to choose cooling, heat,fan,dry.

5 Timer key

Press the key at standby mode to set ON time.

Press this key at ON mode to set OFF time.

6 Temperature/ time display window

This window displays the adjusted temperature and time.

7 °C⟷°F

Press the key to switch ℃ and ℉.

8 Swing key

Press this button or press the speed key and timing key simultaneously to turn on / off the swinging function.

PRODUCT OPERATION

PLANCEMENT AND INSTALLATION

Placement

- Place the machine on the horizontal floor near the window.
- In order to maintain good air circulation and make the machine get the best performance, there should be at least 19.7in.space around it.

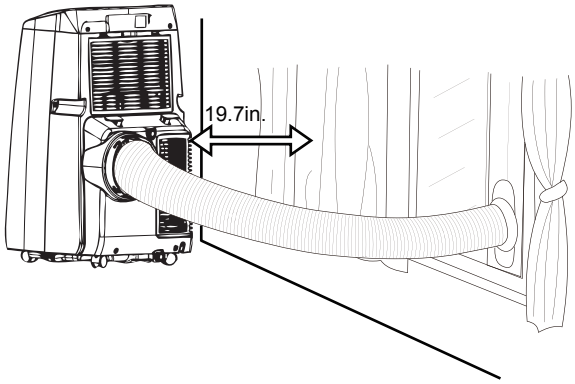

BEST INSTALLATION

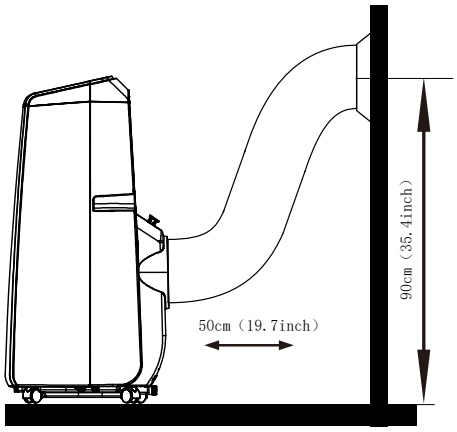

Installation

Exhaust duct assembly

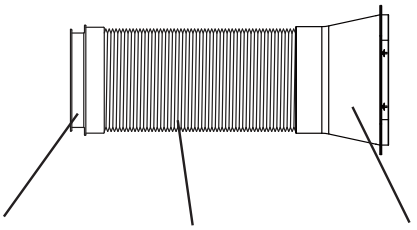

Exhaust joint Exhaust pipe Flattened mouth

Window sealing plate assembly

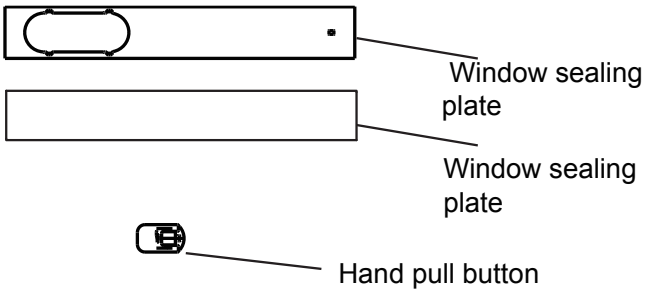

Step 1:

1. Measure window size;
2. Adjust the length of the window sealing plate to make it fit with the size of the window.
3. When the length of the window sealplate is fixed, the length of the sealing plate is fixed by hand pull button.

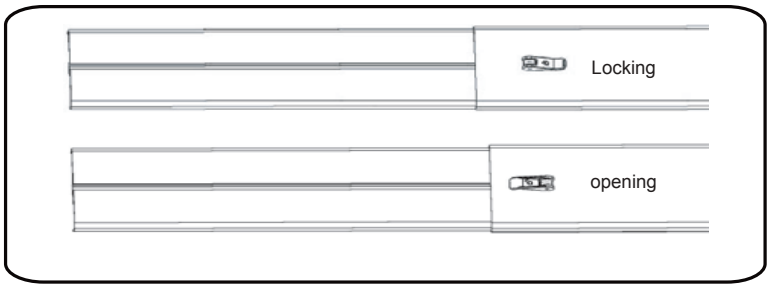

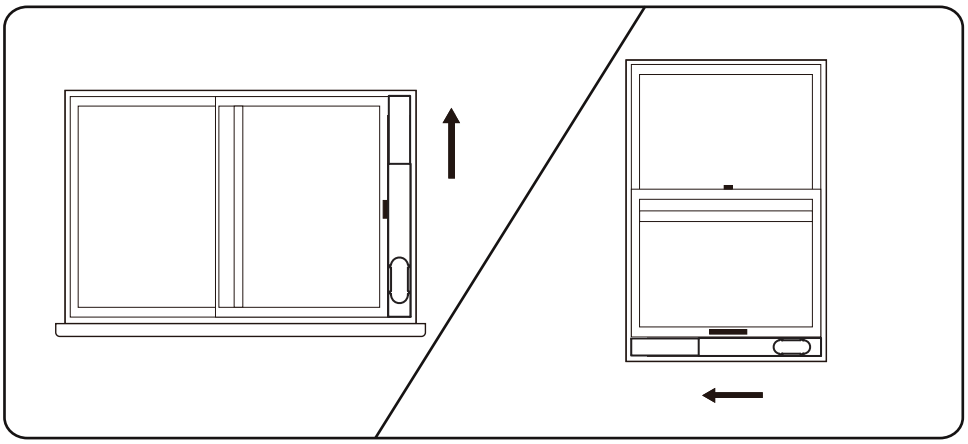

Step 2:

Install the fixed window seal on the window.

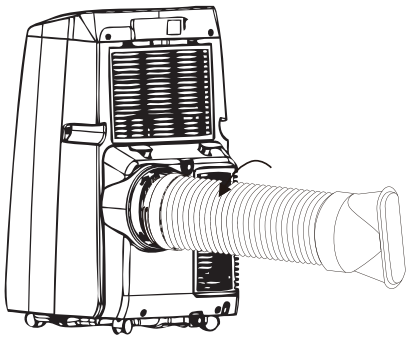

Step 3:

Swirl the exhaust pipe assembly (exhaust fitting end) into the rear panel outlet (counterclockwise).

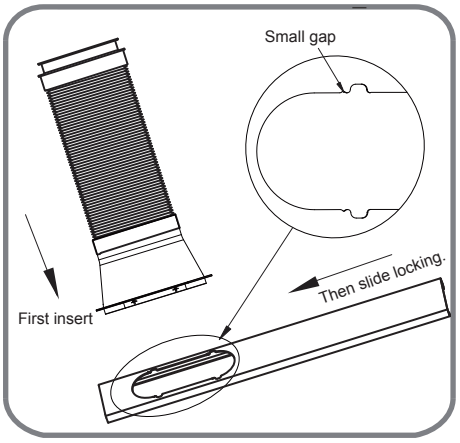

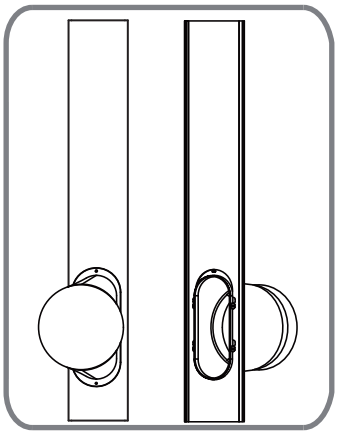

Step 4:

Clip the exhaust pipe assembly (exhaust port end) into the window seal panel assembly and screw it up.

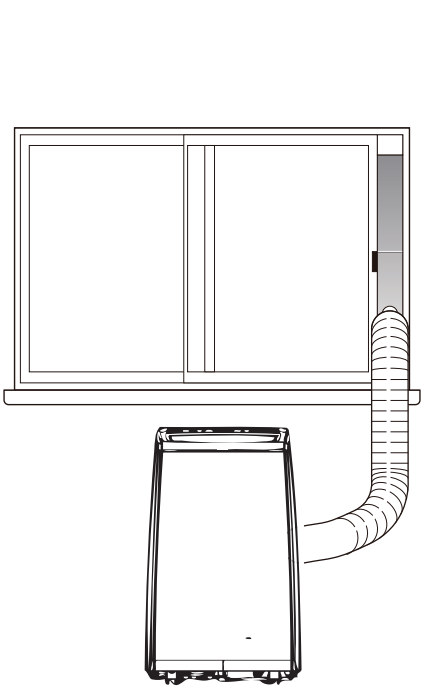

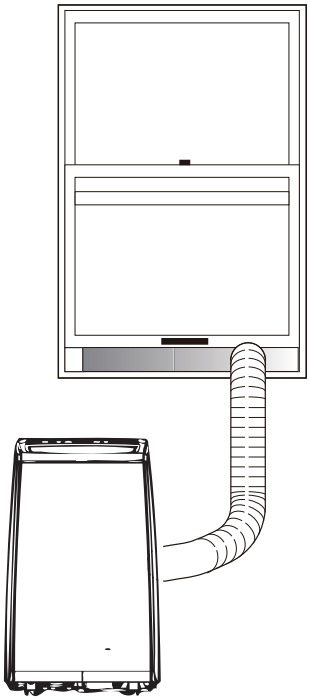

Overall effect diagram after assembly

Incorrect installation

- It's important to keep the exhaust duct smooth. Incorrect installation will affect work of the A/C.
- Prevent the exhaust duct from sharp bending.
- Ensure air can flow smoothly in the duct.

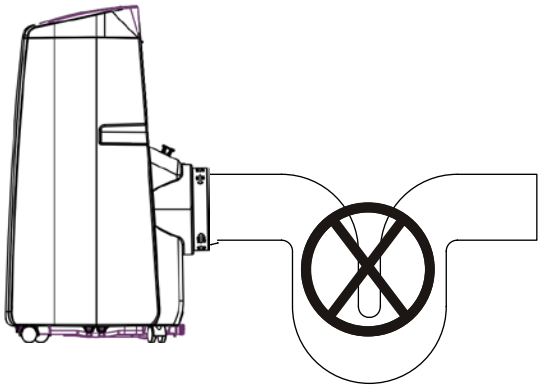

Warning

The exhaust duct is designed especially for this model. Don't replace or lengthen it; otherwise, it will result in failure.

Notice:

Max. developed length of the exhaust duct is 59in. It's better to shorten it while use and keep it horizontal while installation.

REMOTE CONTROLLER

Please install the battery correctly before using the remote control.
The specific steps are as follows:

1. Slide the battery cover on the back of the remote control.
2. Insert 2*AAA（DC1.5V) new batteries and ensure that batteries, and ensure that the battery electrodes are installed correctly when inserted.
3. Fit the battery cover in place.

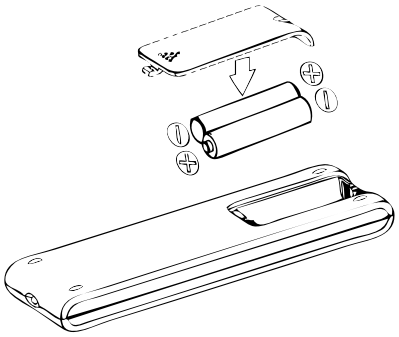

Notice:

1. The remote controller can only use AAA(DC1.5V) batteries.
   Do not use rechargeable batteries or other types of batteries.
2. Replace two batteries when replacing batteries. Do not mix old and new batteries.
3. If the air conditioner is not used for a long time, please remove the battery in the remote control.

Warning:

1. Do not use batteries if there is any leakage.
2. Chemicals in batteries may cause burns or other health hazards. If the liquid flows to the skin or clothes carelessly, please wash them with clean water immediately; if you eat it carelessly, rinse your mouth with clear water immediately, and then go to the hospital for further examination.

OPERATION METHOD

Cool mode

- When the A/C enters cooling mode automatically or cooling mode is selected after power ON, the cooling indicator lamp lights up.
- Press Up/Down key to adjust setting temperature (60°F ~ 86°F) .
- Press Speed key to choose High/Mid/Low speed.

Fan mode

- When pressing mode key or choosing Fan mode by pressing the remote controller, the wind indicator lamp lights up.
- Press Speed key to choose High/Mid/Low speed.
- Temperature can't be set.

Dry mode

- When pressing mode key or choosing dry mode by pressing the remote controller, the dehumidification indicator lamp lights up.
- Take off the water plug of the desiccant nozzle as shown on the right, insert the water guide pipe, and put the other end of the water guide pipe into the water container or drainage channel.
- When entering the dry mode, the compressor is started if the room temperature is greater than 63°F Thereafter the compressor is controlled according to the following rules: when the room temperature is less than 59°F, the compressor is turned off; when the room temperature is raised to more than 59°F, the compressor is restarted (the compressor restart must satisfy the three-minute delay protection function).

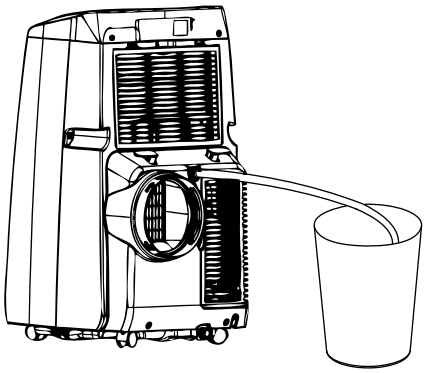

- In dry mode, the fan is defauted to run at low speed, and wind speed can't be adjusted
- Temperature can't be set.

Use hint: when dry function is used, the exhaust pipe assemblyshould be removed, otherwise it will cause that dehumidification effect is notobvious and "FL" full of alarm display appears.

Heating mode

- When the A/C enters heating mode automatically or heating mode is selected after power ON, the heating indicator lamp lights up.
- Press Up/Down key to adjust setting temperature (60°F ~ 86°F) .
- Press Speed key to choose High/Mid/Low speed.

Timer mode

- In standby state, press the Timer key to set ON time. Press Up and Down keys to set ON time (1~24H), and the timer indicator lamp lights up.
- In ON state, pressure the timer key to set OFF time. Press Up and Down keys to set OFF time (1~24H), and the timer indicator lamp lights up.

CLEAN AND MAINTENANCE

DRAINAGE METHOD

This product is equipped with automatic water vaporization system. The condenser is cooled with the circulating of condensing water, so as to improve coolingefficiency and save energy.

If the internal vessel is full of water, the display screen will display “FL”, and the compressor stops working automatically. At this point, the water needs to be discharged. The specific steps are as follows:

1. Unplug the power cord and take down the exhaust duct assembly.
2. Move the air conditioner to the right place.
3. Pull off the drain at the drain and drain the water inside the machine.
4. Re plug the water plug.
5. Reinstall the exhaust duct assembly and start the machine.

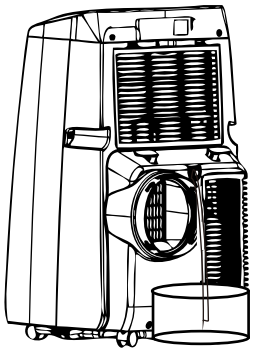

MAINTENANCE

Notice: In order to avoid electric shock, please turn off the A/C and unplug before maintenance or repair.

CLEANING

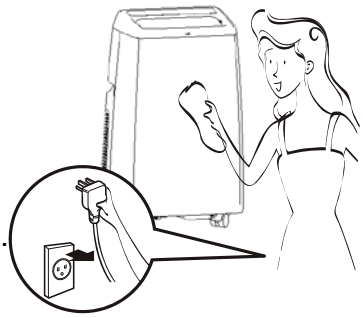

1. Unplug before cleaning.
2. Wipe with soft semi-dry cloth. Don’t use chemical reagent, such as benzene, alcohol and gasoline etc; otherwise surface of the A/C and even the whole A/C will be damaged.
3. Prevent water from spattering in the A/C.

FILTER SCREEN

It is suggested to clean the filter every two weeks. If the indoor air quality is poor, the cleaning frequency should be improved appropriately. Because the filter screen is blocked by dust, it will reduce the efficiency of air conditioning. The specific cleaning steps are as follows:

❶ According to the direction of the chart, the lower intake grille is first taken out and the filter screen is removed.

❷ Clean the filter with clean or warm water (about 104°F) which has been added with neutral detergent, then put it in a cool place to dry.

❸ The filter screen cleaned and dried will be re installed.

❹ Restart the machine and run properly.

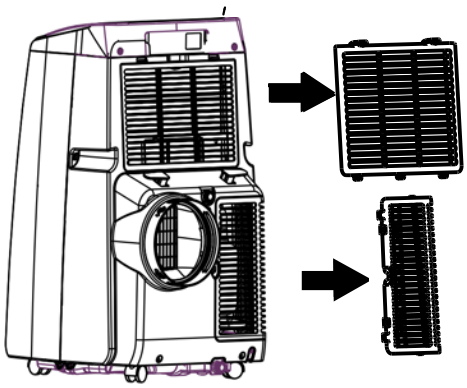

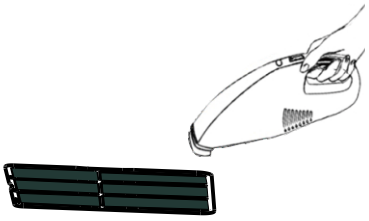

If the filter screen is not too dirty, just use the vacuum cleaner to absorb the dust.

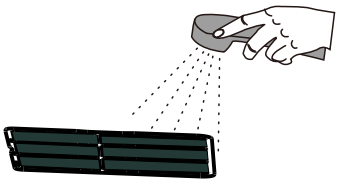

If the filter is dirty, clean the filter with clear water or warm water. The temperature is about 104°F.

Notice:

❶ Do not use water with excessive temperature (suitable temperature is about 104°F) or irritant detergent (such as alcohol, gasoline, benzene, etc.) to clean the filter.

❷ To avoid deformation of the filter, the cleaned filter should be kept away from the heat source and put in dry air to dry naturally.

❸ Do not run machines without filters.

SEASONAL CLEANING

If the A/C will not be used for a long time, Please follow these steps to maintain it:

1. Pull out the water plug to drain.
2. Run the A/C in fan mode for 2H till the inside is dry.
3. Turn off the A/C and unplug.
4. Wash the filter screen and reassemble it.
5. Dismantle the exhaust duct and keep it properly.
6. Take the battery from the remote control.
7. Cover the A/C with a plastic bag and place it at a dry place.

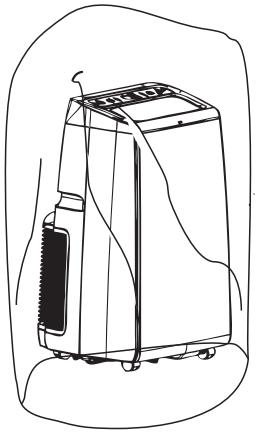

If you haven't used it for a long time, please pay attention to the following points when you use it again:

1. Confirm whether water plugs and filters are installed.
2. Check if the power cord is intact. If there is any damage, do not use it.
3. Reinstall the remote battery.
4. Reinstall the other components according to the installation instructions.

COMMON FAILURES AND DIAGNOSIS

INTELLIGENT ERROR DETECTION

Error-detecting code	Multi-functional defection
E1	Error of the coil's temperature sensor
E2	Error of indoor temperature sensor
E4	Anti-freezing protection: temperature of the coil is too low and the whole A/C is off. When temperature excesses 46°F ,the protection is released and previous working state is recovered.

TROUBLE-SHOOTING

The following table lists the common faults and maintenance methods of this series of portable A/C. When the machine is in abnormal operation, the following table can be used for simple diagnosis and maintenance. If it still can not be solved, please contact professional maintenance personnel.

TROUBLE	CAUSE	SOLUTION
The A/C doesn't work	No display	Reset circuit breaker on AC cord
	The display panel displays "FL"	Restart the A/C after power off and draining, then it will become normal
	Time OFF function is started	The A/C can be restarted 3 minutes after being turning off
The A/C starts frequently	Direct sunlight	Draw the curtain
	Doors and windows keep open; there are lots of people or heat source in room	Close doors and windows, remove heat source
	Filter screen is very dirty	Clean or replace it
	Air inlet or air outlet is blocked	Remove the stem
Big noise of the A/C	The A/C is placed unevenly	Place it at even and firm ground, avoid shaking
The compressor doesn't work	Its delay protection is started	Wait for 3min, turn on after temperature decreases

MACHINE PARTS PARAMETERS

FUSE PARAMETERS

Specification: **Φ5×20mm**

Voltage: **250VAC**

Current: **3.15A**

MACHINE DIMENSIONS

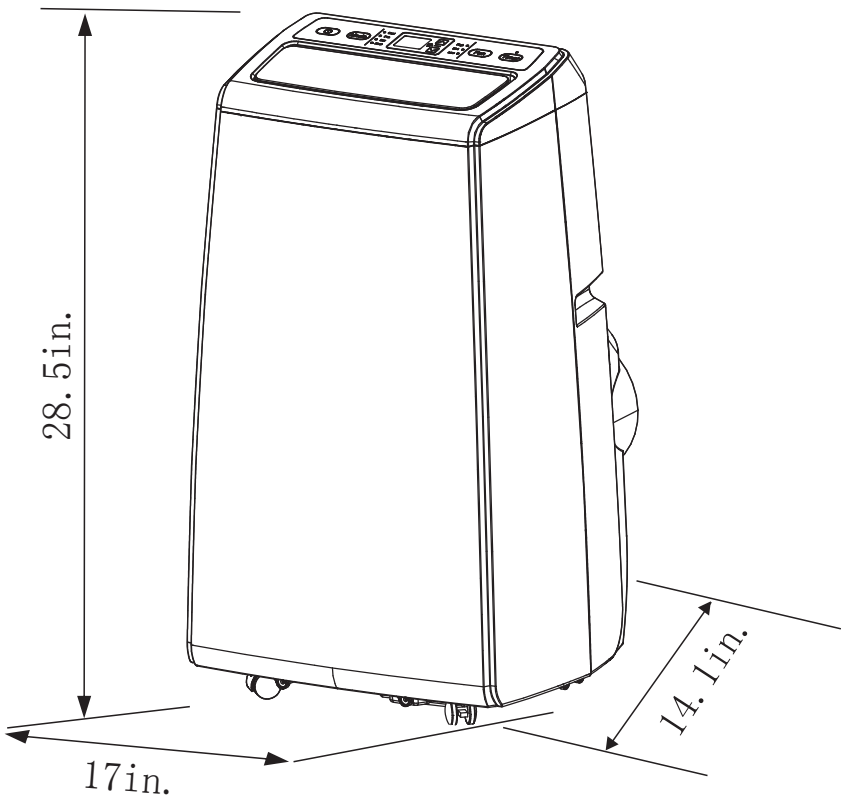

The above technical parameters are subject to change without notice.

Additional warning for appliance with R32 refrigerant gas (refer to the rating plate for the type of refrigerant gas used)

CAUTION ON FIRE

READ THE MAUAL CAREFULLY BEFORE USING THE APPLIANCE R32 refrigerant gas complies with European environmental directives.
This appliance contains approximately 11.3 Oz refrigerant gas
Appliance shall be installed, operated and stored in a room with a floor area larger than $4m^2$.