Rowing Machine

Model Number: RW623-50

Model No. is helpful when you make an order inquiry.

Activate Warranty

Please contact us at the following email address to register your product and activate the warranty.

Customer Service

North America Email:
wenokerdirect@outlook.com
Monday-Friday
From 8:00 a.m. to 6:30 p.m.
(Except Holidays)

WARNING

Before beginning any exercise program, consult your physician.This is especially important for individuals over the age of 35 or persons with pre-existing health problems. Read all instructions before using any fitness equipment.

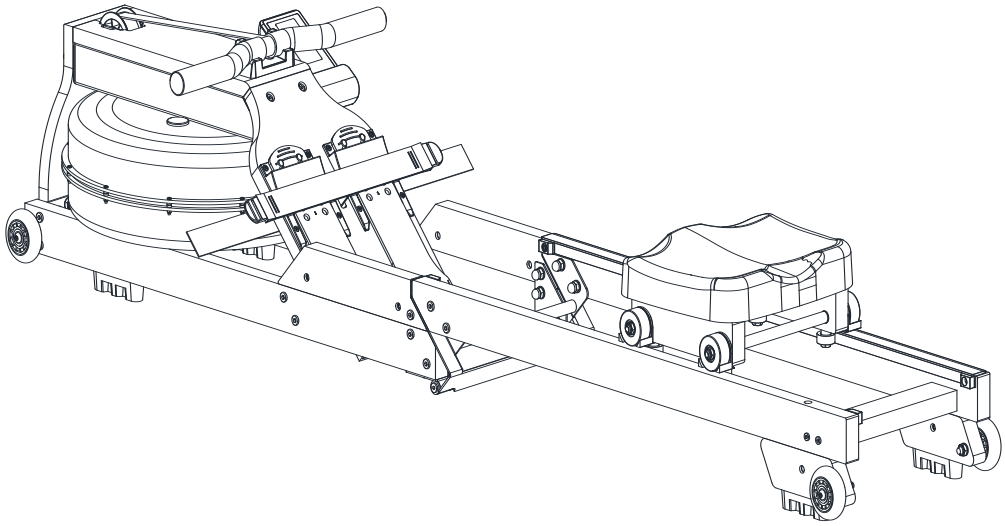

MAKE YOUR FITNESS GOALS

CONTENTS

01 Important safety notice 1
02 Parameters and packing list 2
03 Assembly guidance 4
04 Folding guidance 6
05 Expand guidance 6
06 Moving guidance 7
07 Training guidance 8
08 Exercise instructions 9
09 Monitor instruction manual 10
10 Kinomap 12
11 Kinomap connection operation 13
12 Explosion 14
13 Explosion list 15

01 Important safety notice



Read all the descriptions carefully in the specification before the rowing machine is installed and use, and properly keep the specification.

1、 Assemble the Rower exactly as described in this manual. Do not modify it.

2、 Check all the screws, nuts and other connections before each use for any signs of damage of looseness. Do not use the trainer if it is impaired in any way.

3、 Ensure that the trainer is in a safe and secure indoors location on a level floor away from moisture and water.

4、 Place a suitable base (e.g. mat) beneath the trainer during assembly to limit dust and dirt entering the components. Only use the supplied tools or suitable tools of your own for assembly.

5、 Before beginning training remove all objects within a radius of 2 meters.

6、 Wipe all sweat from the trainer with a soft absorbent cloth after training. Avoid aggressive solvents or harsh brushes when cleaning.

7、 Your health can be affected by incorrect or excessive training. Consult a doctor before beginning a health program. Your doctor can define settings (heart rate, duration etc.) to which you may train yourself. This trainer is not for therapeutic purposes. It is for private home use.

8、 Use only original spare parts for any necessary repairs.

9、 This trainer should be used by only one person at a time.

10、 Never use when under the influence of drugs, alcohol or medication that causes disorientation.

11、 Wear training clothes and shoes that are suitable for fitness training. Your training shoes should be enclosed and tight fitting.

12、 Do not put hands, fingers, feet, toes or any objects on or near this equipment when in use.

13、 If you have a feeling of chest pain, shortness of breath, dizziness, sickness or other abnormal symptoms, please stop training and consult a doctor immediately.

14、 Disabled or handicapped persons should only use the trainer after gaining doctor’s approval and in the presence of an adult who can give aid and advice.

15、 This trainer is not designed for use by children. Keep pets away from trainer during use.

16、 The maximum user’s weight is 150kgs/330Lbs.

02 Parameters and packing list

No	description	quantity		No	description	quantity
A	Main Frame	1PC		B	Seat	1PC
C	Water Pump	1PC		D	Left rear Rail assembly	1PC
E	Right rear Rail assembly	1PC		F	Rail connecting plate	1PC
G	Console holder	1PC		H	Handlebar Holder	1PC
I	Parts Plate	1PC		J	User Manual	1PC
K	Water purification Tablets	3PC				

A

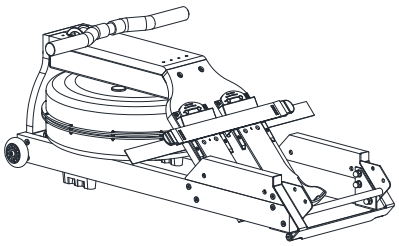

B

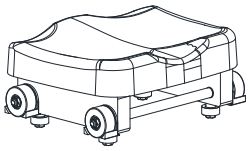

C



D

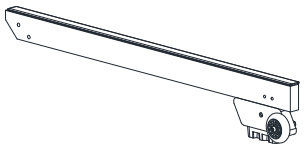

E

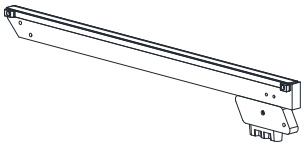

F



G

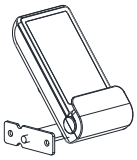

H

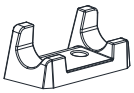

I

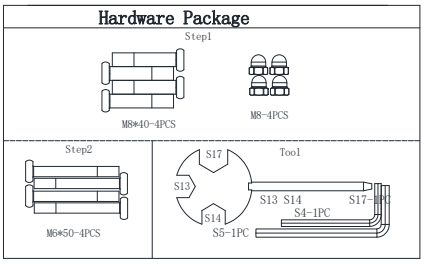

J

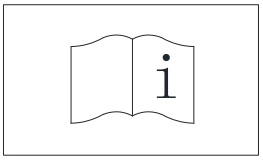

K

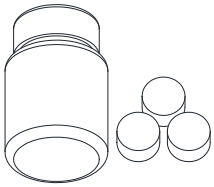

Accessories and tools:

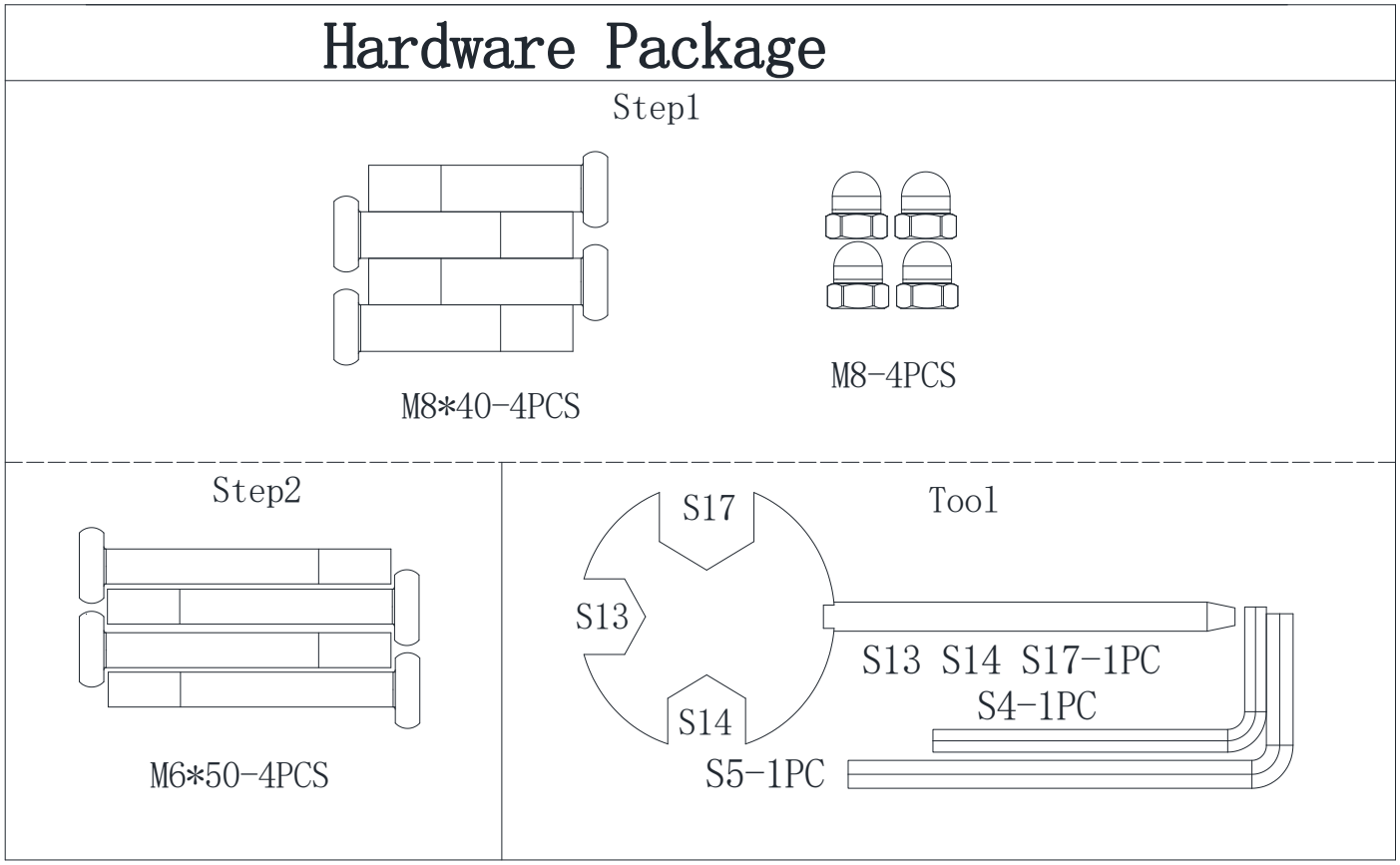

03 Assembly guidance

STEP 1

1) Take out the product from the carton , then fix Left rear Rail assembly (D) , Right rear Rail assembly(E) and Rail connecting plate (F) to the mainframe with tank(A) using screws(59),(61) and Cap Nut(80).

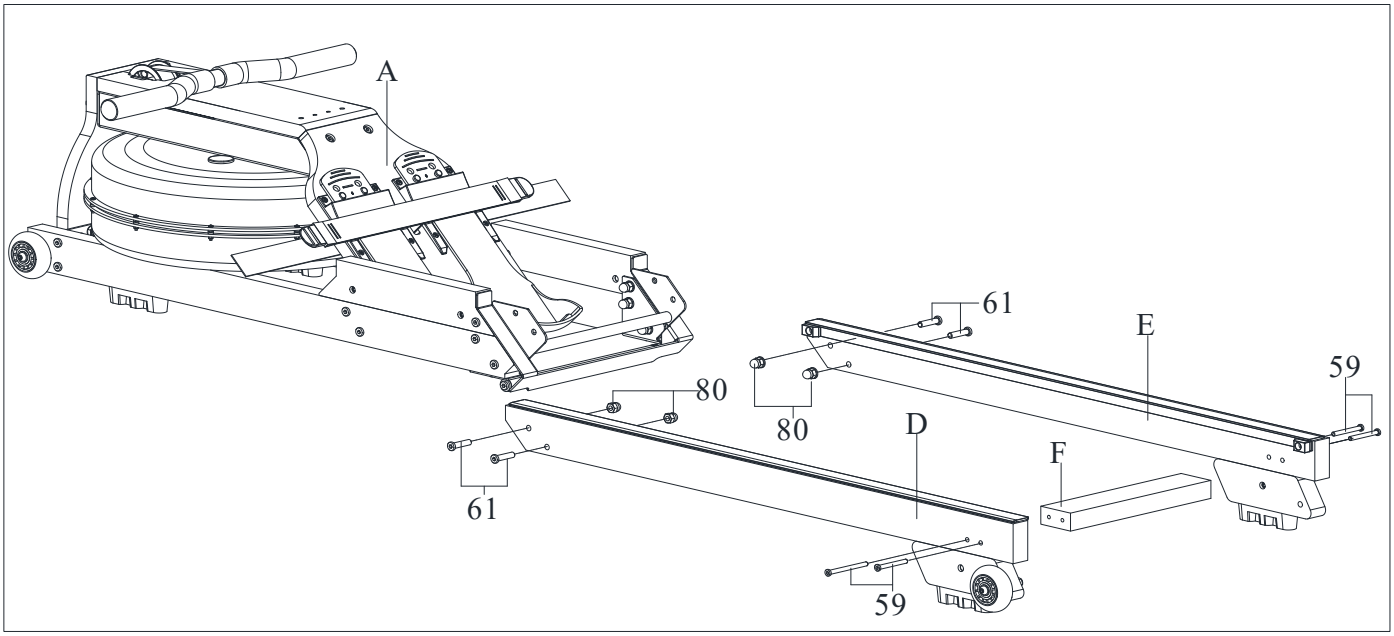

STEP 2:

1)Remove screws (63)and(62)from mainframe with tank (A) and fix console holder (G) and Handlebar Holder(H)to the mainframe with tank using screws;

2) Connect wiring (a1) from mainframe with tank to wiring (d1) on console holder (G);

3) Slide the Assembled Seat (B) into the Guide Rail first, then fix the Seat Cushion Block (47) on the Guide Rail with Hexagon Socket Cylinder Head Screws (62),now the Assembling is completed.

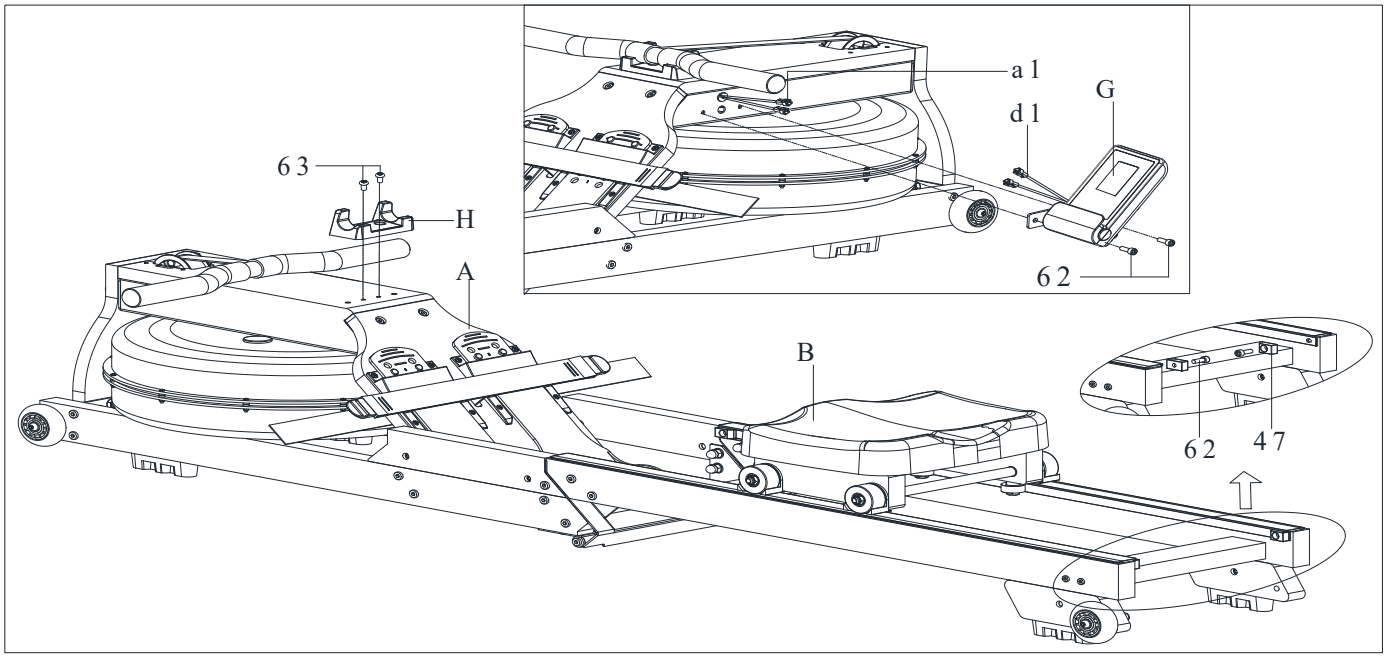

STEP 3:

1) Take the Tank Plug (L) out from the tank.
2) Inject water following Fig 1. Put the Water Pump (C) in the tank, use the Water Pump (C)to take water from the water bucket to the tank. Measure the amount of water in the tank according to the digital meter on the side of the tank.
3) Take out water from the tank as Fig 2. Put a bucket beside the machine, use the Water Pump(C) to draw water from the tank to the bucket. Put the Tank Plug (L) into the tank,clean the water on the machine.

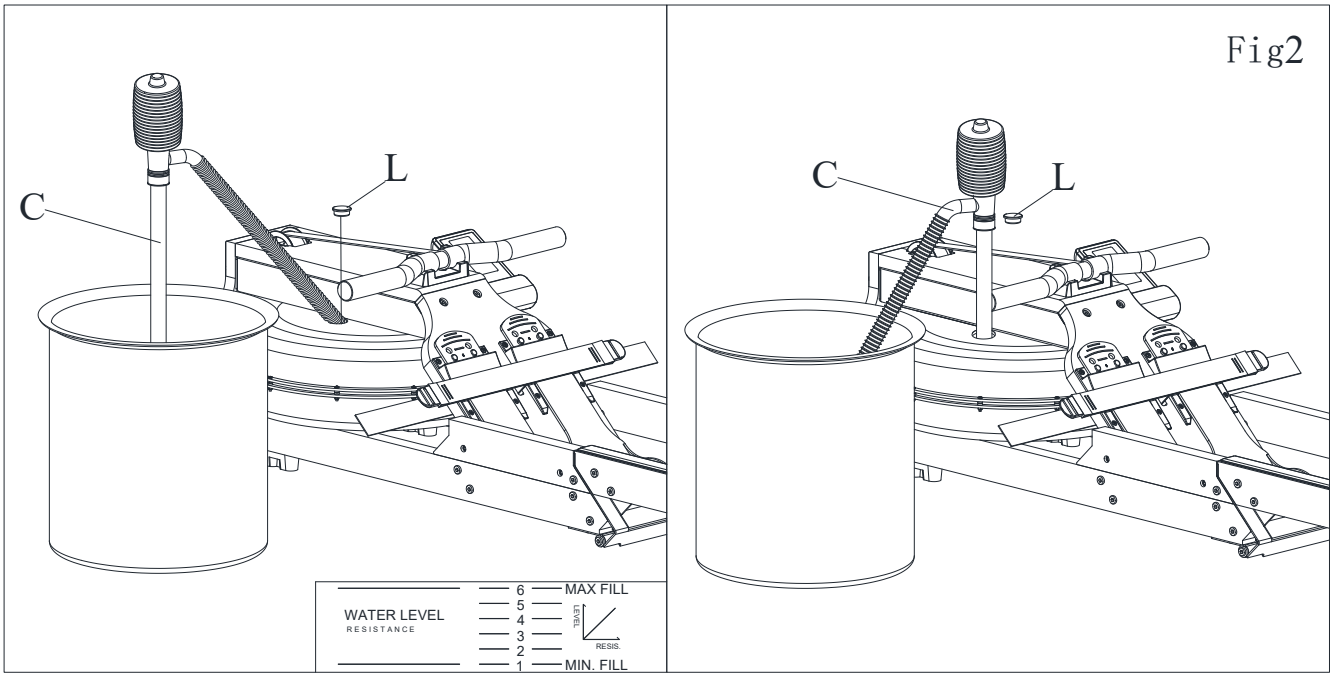

Note: Tank cleaning and maintenance

1) Only tap water can be filled into the water tank. Add water purification tablets (package contains one bottle), do not use poor quality water purification tablets or bleach, it will damage the tank and is not covered under warranty.

2) Add water purification tablets every 3 months or as needed. If the water has become very cloudy, replace the water in the tank.

3) The water replaced out of the tank is not suitable for re-consumption, please dispose of it as sewage.

4) If not used for a long time, please empty the water in the tank.

04 Folding guidance

When folding the machine,please note:
1) Move the assembled Seat (B) to the end of the rail to prevent the Seat from falling quickly and damaging the machine.
2) Hold the Folding Rod (N) with your hand, and pull it up with a little force, then folding is completed.

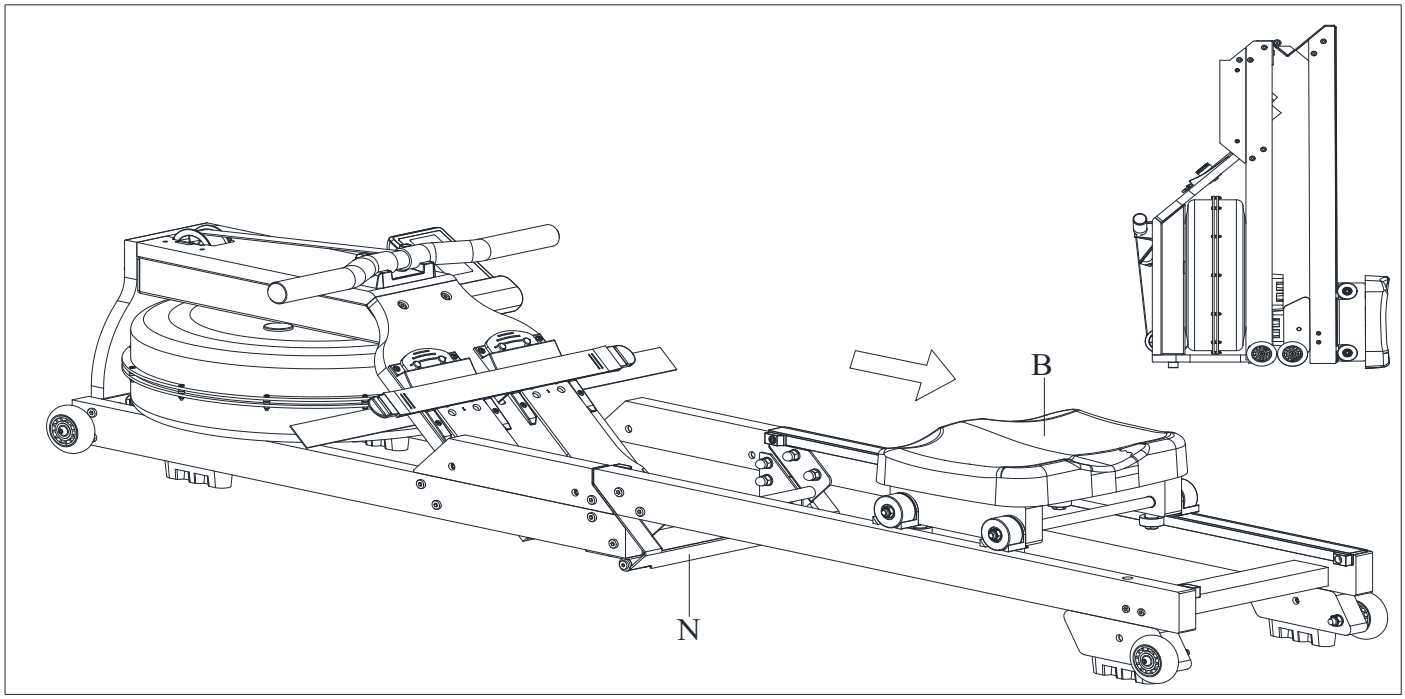

05 Expand guidance

1) When the product is to be unfolded, step on the left PU roller (38) with your left foot, hold the folding puller tube (N) with your hand, pull the left and right tracks (D / E) outward with your other hand, and then the PU rolling wheels (38) on the rear track will touch the ground to unfold it outward according to the illustration;
2) Then you can move the machine as you like to where you want to place it, and then you can start to do the exercise.

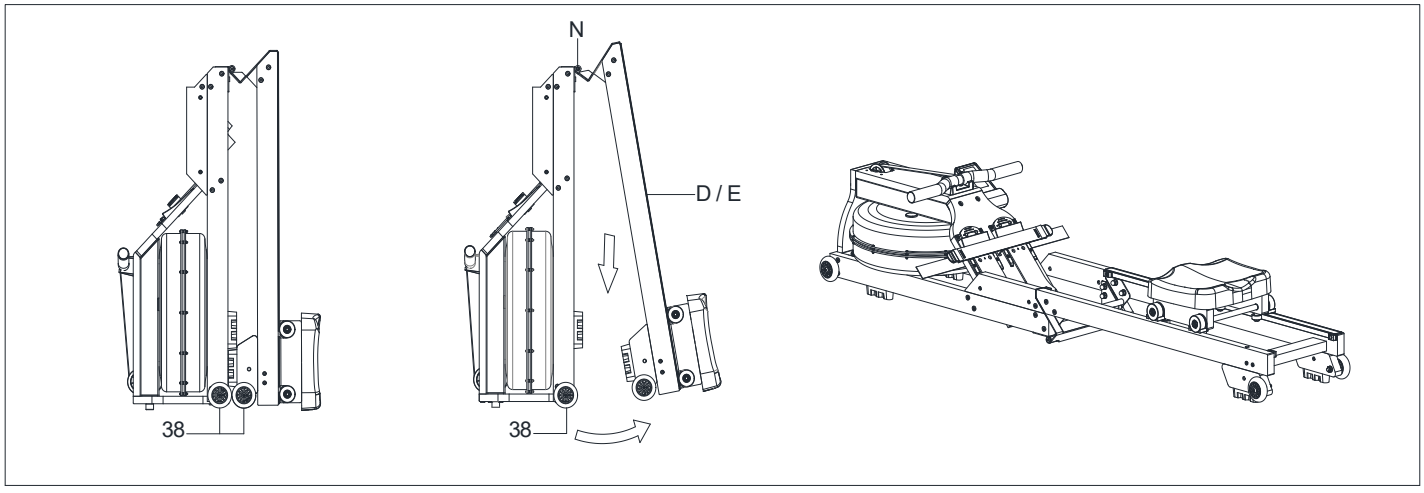

06 Moving guidance

1) To move the rower, first move the assembled Seat (B) to the front (to prevent the cushion assembly from falling down quickly and damaging the product when it is folded);
2) Lift the rear feet (D / E) of the left and right rails by hand until the PU rolling wheels (38) on the front of the rails touch the ground, then you can move the machine to where you want to place it as you wish.

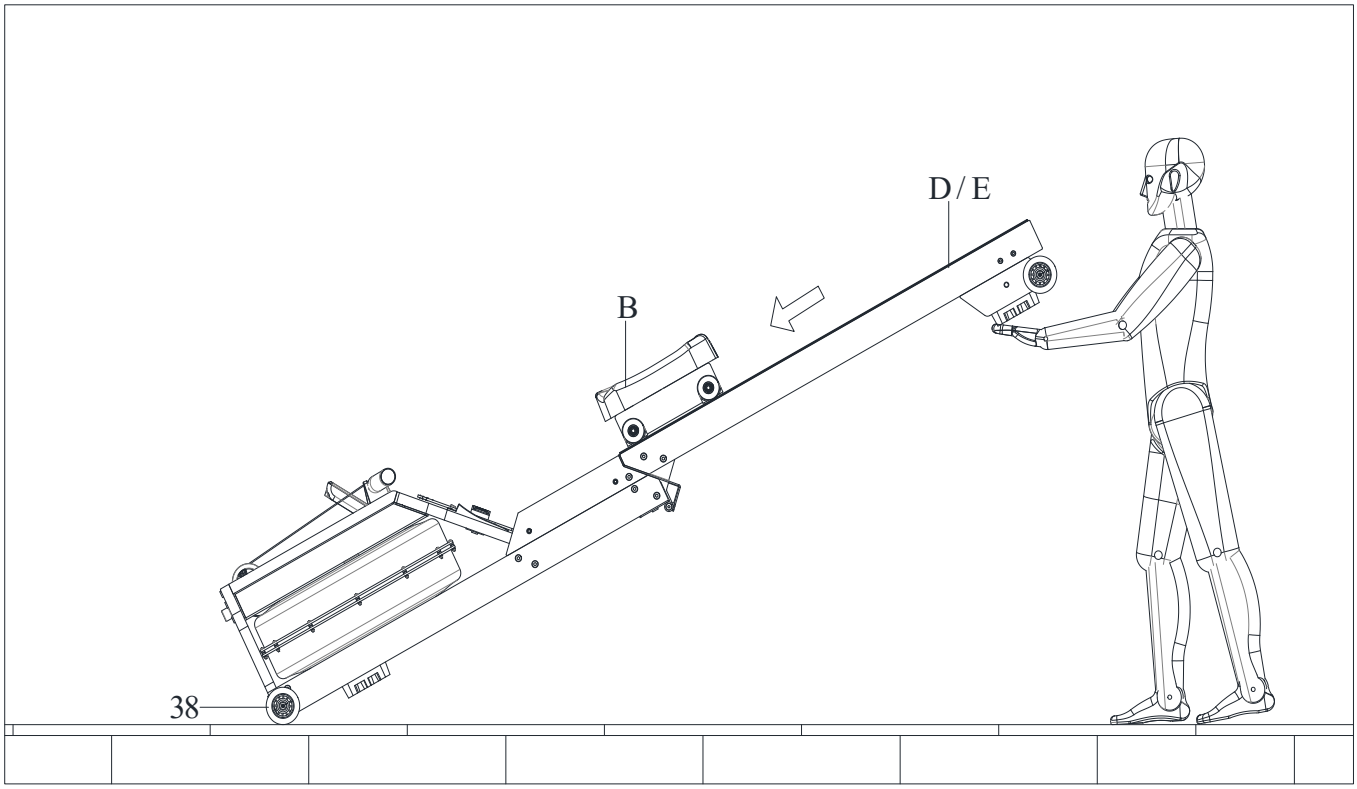

07 Training guidance

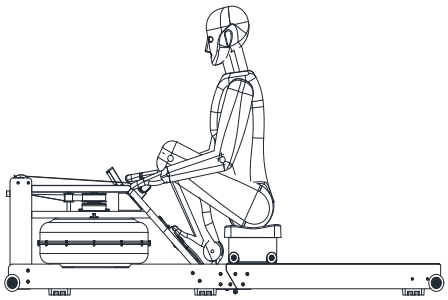

Ready Status

Set your arms forward, release your shoulders. Raise up your head and keep your eyes forward. Holding your feet and legs under your body.

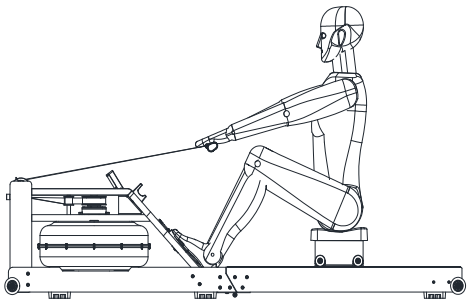

Sliding Status

Grab the lever, set your body at the correct gesture and angle, release your legs to push forward.

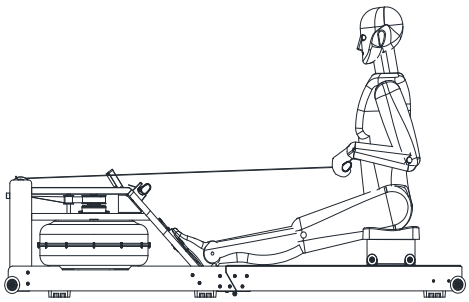

Back to the position

Push forward your legs, pull the lever to your chest and release your shoulders.Keep eyes looking forward. After regular exercise and get the right rowing method, it will be much easier than rowing a real boat. Soon you will find the advantages of using a rowing machine to exercise.

08 Exercise instructions

1.The Warm Up Phase

This stage helps get the blood flowing around the body and the muscles working properly. It will also reduce the risk of cramp and muscle injury. It is advisable to do a few stretching exercises as shown below. Each stretch should be held for approximately 30 seconds, do not force or jerk your muscles into a stretch - if it hurts, **STOP.**

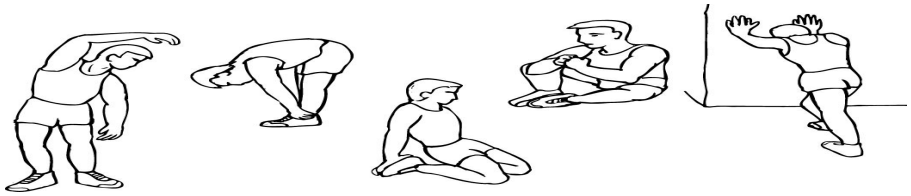

2.The Exercise Phase

This is the stage where you put the effort in. After regular use, the muscles in your legs will become stronger. It is important to maintain a steady tempo throughout. The rate of work should be sufficient to raise your heart beat into the target zone shown on the graph below.

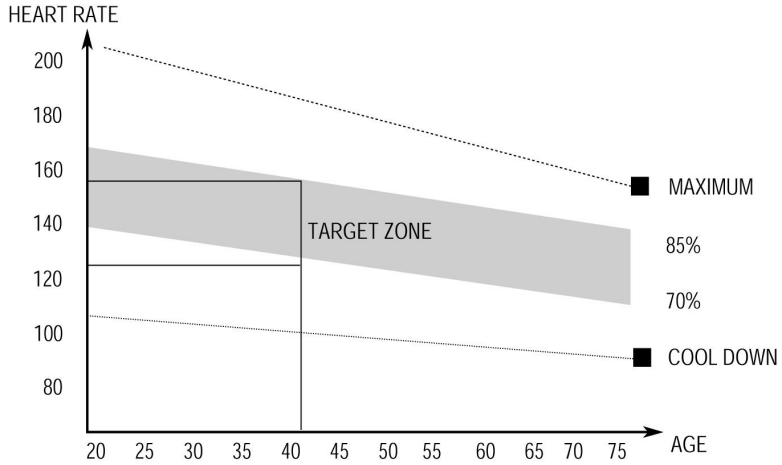

This stage should last for a minimum of 12 minutes for most people

3. The Cool Down Phase

This stage is to let your cardio-vascular system and muscles wind down. This is a repeat of the warm up exercise e.g. reduce your tempo, continue for approximately 5 minutes. The stretching exercises should be repeated remembering not to force or jerk your muscles into the stretch. As you get fitter you may wish to train longer and harder. It is advisable to train at least three times a week, and if possible, space your workouts evenly throughout the week.

Muscle Toning

To tone muscle while on your trainer you will need to have the resistance set quite high. This will put more strain on our leg muscles and may mean you cannot train for as long as you would like. If you are also trying to improve your fitness you need to alter your training program. You should train as normal during the warm up and cool down phases, but towards the end of the exercise phase you should increase resistance, making your legs work harder than normal. You may have to reduce your speed to keep your heart rate in the target zone.

Calorie Burning

The important factor here is the amount of effort you put in. The harder and longer you work the more calories you will burn. Effectively this is the same as if you were training to improve your fitness, the difference is the goal.

09 Monitor instruction manual

BUTTONS

1. MODE
①Press this button to changeover display time (time/500m), calories (total strokes) and distance (total distance).

2. SET
①In setting status, press this button and changeover choose the “MODE” button to increase setting value in relevant flashing window for TIME, DIST, CAL.

3. RESET
①In setting status, press this button to reset the value in relevant flashing window for TIME, DIST and CAL.
②In monitor status, hold this button for 3 seconds to reset all value to zero.

FUNCTIONS

1.STROKES
①Display instantaneous strokes and the range is 0~9999 Strokes.

2.SPM(strokes/ minute)
①Display current repetition per minute(SPM) during exercise. It reflects the stroke frequency. The range is 0~1500 rate per minute

3.TIME
①Count the total time from exercise start to the end and the range is 0:00 ~ 99:59 Minute
②Exercise time can be set in advance, when it approaches the preset time, the monitor will alarm 10 seconds. The maximum pre-set time is 99 minutes.

4.TIME/500m
①Show to paddle boat time with 500 M， The range is 0:00 ~ 99:59 Minute

5.DISTANCE(DIST)
①Count the total distance from exercise start to the end and the range is 0.0 ~ 9999 KM OR Mile.
②Exercise distance can be set in advance, when it approaches the preset distance, the monitor will alarm 10 seconds. The maximum pre-set distance is 9999KM

6.TOTAL DISTANCE(ODO)
①Count the total distance after installing the batteries.

7.TOTAL STROKES
①Count the total strokes after installing the batteries.

8. CALORIES(CAL)
①Count the total calories consumed from exercise start to the end and the range is 0.0 ~ 9999 KCAL.
②The calorie value can be set in advance, when it approaches the preset calorie, the monitor will alarm 10 seconds. The maximum pre-set calories is 9999KCAL

9.AUTO START/STOP
①Without any signal of exercise or operation for 4minutes, the power will turn off automatically.
②Once receive exercise or operation signal, the monitor will turn on automatically.

OPERATION

SET

Press MODE to choose the display window that needs to be pre-set, and the value in relevant window will flash. Then press SET to increase the value to reach your want alarm time, alarm distance or alarm calorie. Hold SET to increase the value rapidly. Press RESET to reset value in relevant flashing window.

BATTERY REPLACE

When the display becomes dim or illegible, remove the battery and replace with SIZE AAA UM4 R03.

10 Kinomap

Download Kinomap Fitness App, enable your device and 300.000 Km geolocalized videos registered all over the world will be available to you!
Challenge your friends, compete with other users or trained alone to overcome your records. With more than 15 new features, the training app displays a completely fresh look to fit its user’ s needs including real-life footages to train indoor as if they were outside.
The new edition of the Kinomap App also includes coaching video content, a brand new game play through public and private races.
Running has never been so exciting: your treadmill will incline automatically to adapt to the type of path surface you have chosen and the video speed will synchronize with the rythm of your motion. Are you ready to start?
Explore every corner of the world, share and comment on social networks and compare your performance.
The application is available for free download. A 14-day trial period allows our customers to test the application. Once this period has elapsed, access to the application is no longer available and a premium subscription must be taken out. (month, year or "life time")
App features
NEW!! Structured workouts: Coaching, intervals, FTP test. No excuse: you'll reach your goals! search by popularity, keyword, country, difficulty, duration or incline
access to over 300.000 Km of cycling, running and rowing videos posted by the Kino map
community (with nearly 25 to 50 new contributions per day) view your strength, speed, distance, time and heart rate easy setup in the equipment tab
save your training history and track your progress
optimized for external display: if you have an Apple TV or an HDMI adapter, transfer the video, the elevation profile and dashboard to your screen and maximize the space for the map
browse and create playlists. warm-up with our interval training programs
post your results on Facebook, Strava, Training Peaks, RunKeeper, Under Armour and more added audio chat during multi-player sessions (races or coaching).
in challenge mode, we display several avatars: the contributor (who made the recording), then yourself (if you have already done that ride) but also other participants who have already done the course with the same equipment as you to ensure consistency.
We are going to release in the coming weeks (developed structured workouts, free ride mode and GPS only mode.
Discover more on www.kinomap.com
* On Android devices, at the moment, the treadmills don't support the interval training.

11 Kinomap connection operation

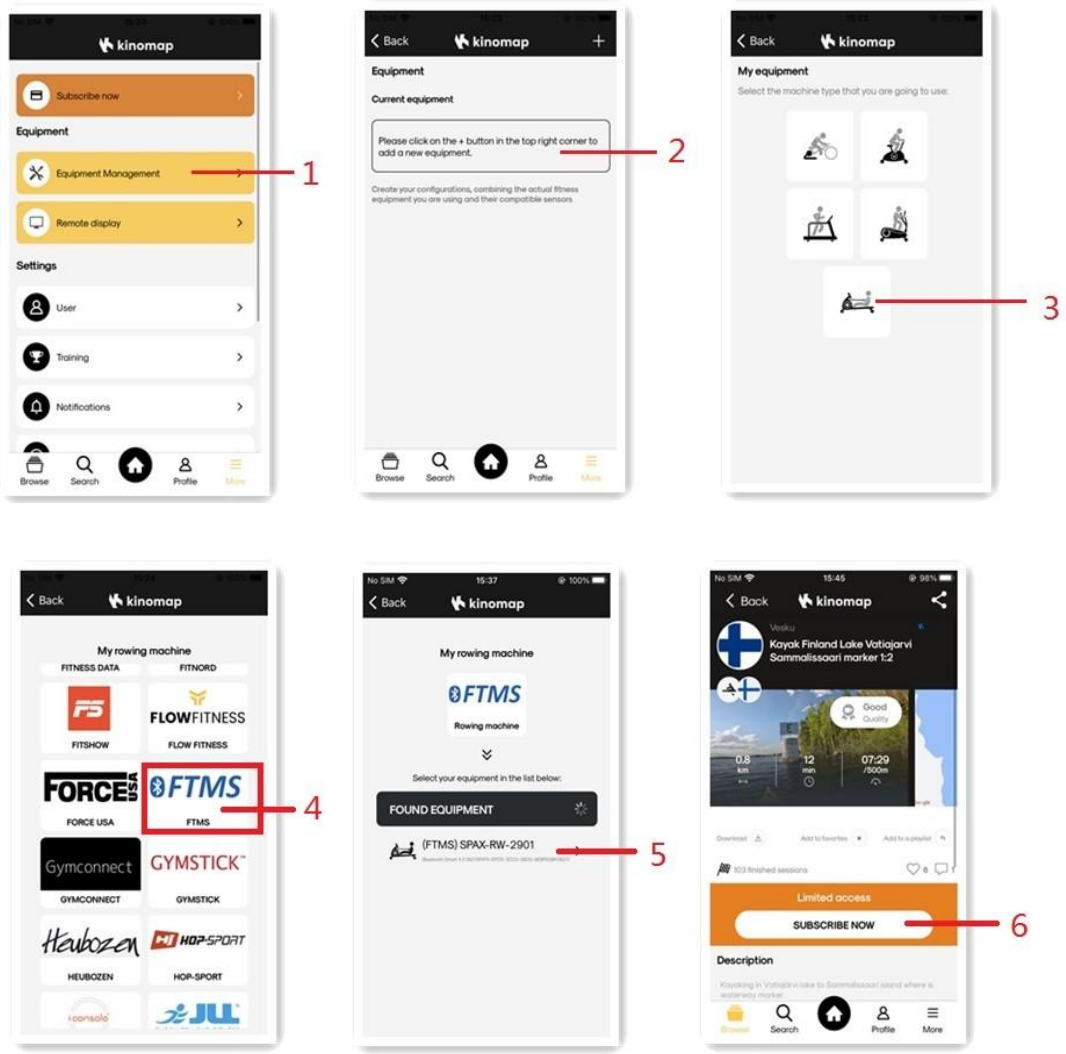

Search, download & install Kinomap over Apple Store or Google Play depending on your smartphone system.

【1】Enter Kinomap to select [More] page;

【2】Select to add more fitness equipment;

【3】Select and click Rowing machine icon;

【4】Tap FiteShow entrance;

【5】Tap the matching devices like 'SPAX-RW-XXXX' (X means random digit) to pair;

【6】Find related videos to start your favorite running mode.

12 Explosion

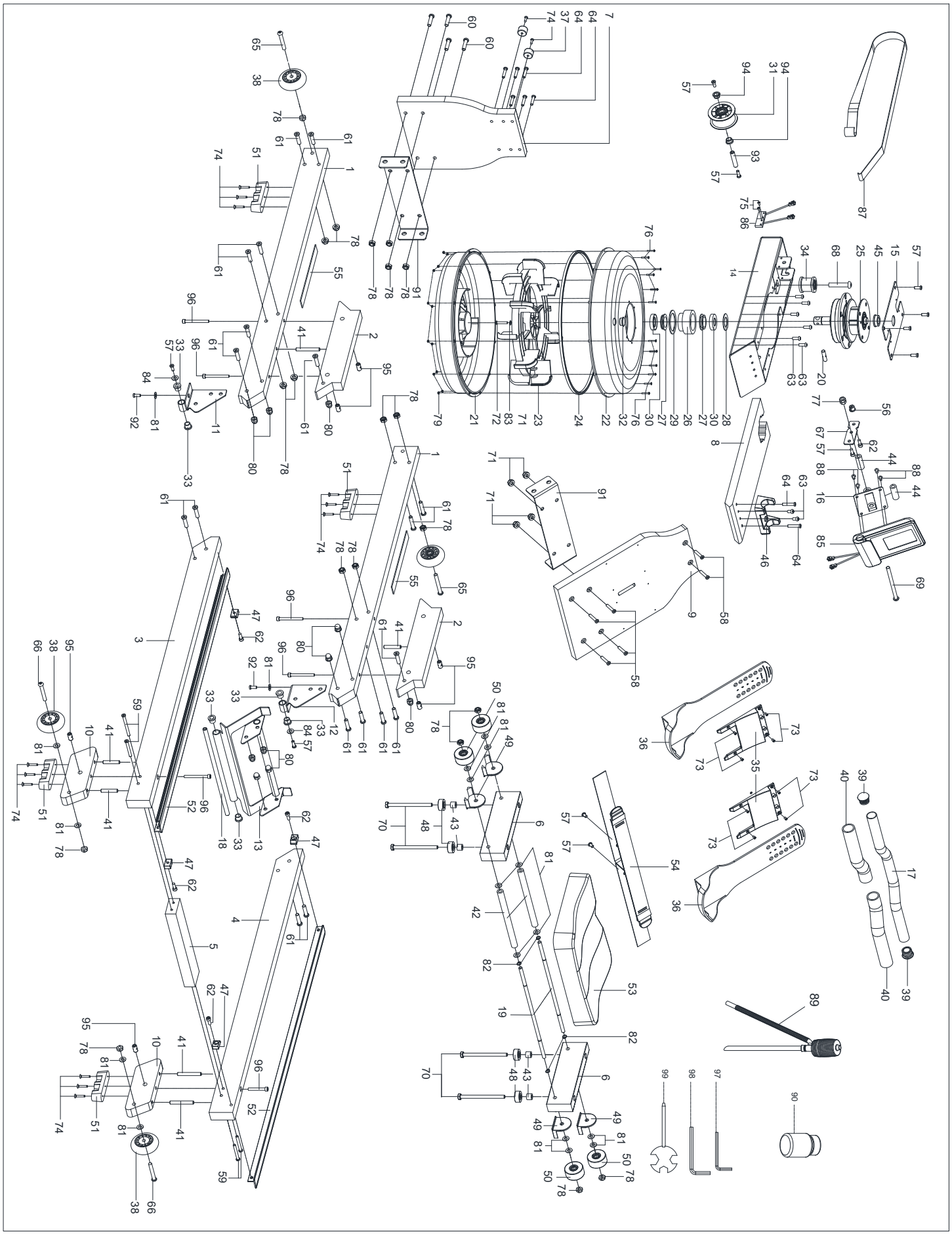

13 Explosion list

NO.	Description	Specifications	Q'ty	NO.	Description	Specifications	Q'ty
1	front Rail	898*60*27	2	47	Seat Cushion Block	25*15*10	4
2	front Rail Flitch	324*60*27	1	48	Small Roller	ϕ28*11.5	4
3	Left rear Rail	950*60*27	1	49	Roller Holder	6*43.5*32.4	4
4	Right rear Rail	950*60*27	1	50	Seat Roller	ϕ46*22	4
5	Rail connecting plate	260*60*27	1	51	Foot Pad	100*25*25	4
6	Seat fixing plate	220*60*27	2	52	Sidebar	30*17.5*944	2
7	Front Baffle	277.5*240*20	1	53	Seat Cushion	320*260*52	1
8	Top Connecting Panel	372*132*20	1	54	Webbing Strap Set	38.1**2*800	1
9	Pedal Bottom Plate	355*250*20	1	55	EVA Pad	90*25*δ2	2
10	Back Foot Plate	185.6*60*27	2	56	Wire Plug 12	ϕ14.5*ϕ12	1
11	Left Front Connecting Part	assembly	1	57	Screws	M6×10×S4	10
12	Right Front Connecting Part	assembly	1	58	Screws	M6×30×S4	6
13	Back Connecting Panel	assembly	1	59	Screws	M6×50×S4	4
14	Tank Fitting Part	assembly	1	60	Screws	M8×32×S5	4
15	Fixing Panel	assembly	1	61	Screws	M8×40×15×S5	18
16	Monitor Support Base	assembly	1	62	Screws	M6*16	6
17	Handlebar	assembly	1	63	Screws	M6×15×S5	8
18	Long Bearing	ϕ10*305	1	64	Screws	M6×35×S4	8
19	Seat Bearing	ϕ8*320	2	65	Screws	M8×55×35×S5	2
20	Fixed Pin	ϕ10*40	1	66	Screws	M8×65×45×S5	2
21	Bottom Half of Tank	ϕ445*69.5	1	67	Connecting plate	δ3	1
22	Top Half of Tank	ϕ445*69.5	1	68	Screws	M10×50×15×S6	1
23	Blade	ϕ330*106	1	69	Screws	M8×110×30×S6	1
24	Tank Sealing Ring	ϕ430*7	1	70	Bolts	M8×90×20×S14	4
25	Spring Box	ϕ140*134	1	71	Nylon Nut	M6xH6xS10	4
26	Sealing Ring Fixing Part	ϕ60*ϕ45*30	1	72	Screws	M6*30×S5	1
27	Washer	ϕ40*7	2	73	Screws	ST4.2x13xΦ7	8
28	Washer 2	ϕ42*ϕ25*δ2	1	74	Screws	ST4.2x19xΦ11	14
29	Rubber Sealing Washer	ϕ60*ϕ45*δ2	1	75	Screws	M4x6xϕ7	2
30	Bearing	ϕ20*ϕ40*8	2	76	Screws	M3x17xϕ6	12
31	Pulley	ϕ68*ϕ54*32	1	77	Nut	M8×H6.8×S14	2
32	Water Tank Plug	ϕ31.3*10.4	1	78	Nylon Nut	M8xH7.5xS13	20
33	Bearing Sleeve	ϕ18*ϕ10.2*13	6	79	Nylon Nut	M3xH3.8xS6	12
34	Small Strap Wheel	ϕ51*ϕ38*32	1	80	Cap Nut	M8×H16×S13	10
35	Pedal Supporting Base	132*106*18	2	81	Washer	d8×ϕ16×1.5	16
36	Pedal Adjustment Plate	343*106*56	2	82	Shaft Retaining Ring	D7×0.9	4
37	Foot Pad	ϕ20*15	2	83	Washer	d6×ϕ16×1	1
38	Moving Wheel	ϕ69*23.5	4	84	Washer	D6×ϕ16×1	2
39	Semi-Sphere Plug	ϕ25*1.5	2	85	Console	FY8330	1
40	Grip Cover	ϕ30*3*205	2	86	Sensor Wire	L200	2
41	Wood Dowel	Φ8*60	6	87	Strap	25*3100	1
42	PVC Sleeve 2	ϕ15*ϕ8.2*195	2	88	Screws	M5×12	4
43	PVC Sleeve 3	ϕ15*ϕ8.2*10	4	89	Water Pump	650*ϕ22	1
44	PVC Sleeve 4	ϕ15*ϕ8.2*40	2	90	Water Purification Tablets	ϕ30*30	1
45	Main Bearing Sleeve	ϕ40*ϕ30*10	1	91	U Connecting Panel	Q235/δ3	2
46	Handlebar Holder	96*54*40	1	92	Screws	M6×15×S4	2

93	The Pulley Shaft	ϕ10*44	1	98	Allen Key S5	30*80*5 S5	1
94	Powder Shaft Sleeve	ϕ16*ϕ10.1*3	2	99	Spanner	S13-14-17	1
95	The Cylindrical Nut	ϕ10*20	6				
96	Screws	M6*60*16*S5	6				
97	Allen Key S4	25*60*4 S4	1				

Warning:
Changes or modifications to this unit not expressly approved by the party responsible for compliance could void the user's authority to operate the equipment.

NOTE:
This device complies with part 15 of the FCC Rules. Operation is subject to the following two conditions:
(1) This device may not cause harmful interference, and
(2) this device must accept any interference received, including interference that may cause undesired operation.

FCC Statement:
This equipment has been tested and found to comply with the limits for a Class B digital device,
pursuant to part 15 of the FCC Rules. These limits are designed to provide reasonable protection against
harmful interference in a residential installation. This equipment generates, uses and can radiate radio
frequency energy and, if not installed and used in accordance with the instructions, may cause harmful interference
to radio communications. However, there is no guarantee that interference will not occur in a particular installation.
If this equipment does cause harmful interference to radio or television reception, which can be determined by turning
the equipment off and on, the user is encouraged to try to correct the interference by one or more of the following measures:
—Reorient or relocate the receiving antenna.
—Increase the separation between the equipment and receiver.
—Connect the equipment into an outlet on a circuit different from that to which the receiver is connected.
—Consult the dealer or an experienced radio/TV technician for help.

RF exposure compliance statement:
This device has been evaluated to meet the general RF exposure requirement

This equipment should be installed and operated with minimum distance 20cm between the radiator and your body.

Hey !

NEED HELP?



LET US HELP YOU

North America Email: wenokerdirect@outlook.com

Monday-Friday

From 8:00 a.m. to 6:30 p.m. (Except Holidays)