NordicTrack®

COMMERCIAL1750

nordictrack.com

Model No. NTL17124.10
Serial No. _____

Write the serial number in the space above for reference.

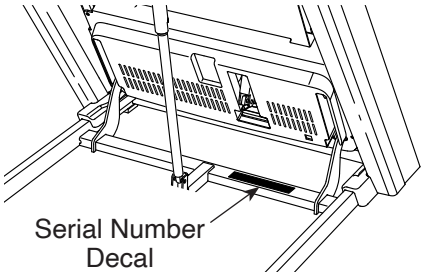

REGISTER YOUR PRODUCT

To register your product and activate your warranty today, go to my.nordictrack.com.

MEMBER CARE

For service at any time, go to my.iFIT.com or scan the QR code.

Please do not contact the store.

⚠CAUTION

Read all precautions and instructions in this manual before using this equipment. Keep this manual for future reference.

USER'S MANUAL





TABLE OF CONTENTS

WARNING DECAL PLACEMENT 2
IMPORTANT PRECAUTIONS 3
BEFORE YOU BEGIN 6
PART IDENTIFICATION CHART 7
ASSEMBLY 8
HOW TO PLUG IN THE POWER CORD 17
HOW TO USE THE TREADMILL 18
FCC INFORMATION 29
HOW TO FOLD AND MOVE THE TREADMILL 30
MAINTENANCE AND TROUBLESHOOTING 31
EXERCISE GUIDELINES 34
PART LIST 38
EXPLODED DRAWING 40
ORDERING REPLACEMENT PARTS . . . . . Back Cover
LIMITED WARRANTY . . . . . Back Cover

WARNING DECAL PLACEMENT

This drawing shows the locations of the warning decals. **If a decal is missing or illegible, see the front cover of this manual and request a free replacement decal. Apply the decal in the location shown.** Note: The decals may not be shown at actual size.

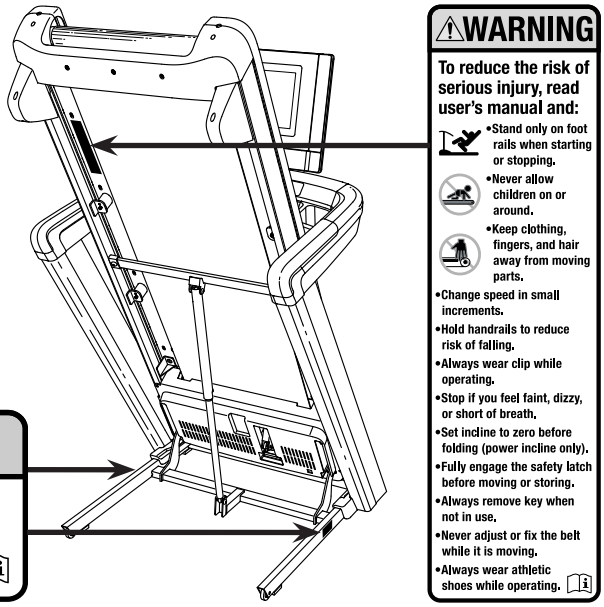

NORDICTRACK and IFIT are registered trademarks of iFIT Inc. The Bluetooth® word mark and logos are registered trademarks of Bluetooth SIG, Inc. and are used under license. Google Maps is a trademark of Google LLC. Wi-Fi is a registered trademark of Wi-Fi Alliance. WPA and WPA2 are trademarks of Wi-Fi Alliance.

IMPORTANT PRECAUTIONS

⚠WARNING: To reduce the risk of burns, fire, electric shock, or injury to persons, read all important precautions and instructions in this manual and all warnings on your treadmill before using your treadmill. iFIT assumes no responsibility for personal injury or property damage sustained by or through the use of this product.

1. It is the responsibility of the owner to ensure that all users of the treadmill are adequately informed of all warnings and precautions.
2. Keep children under age 16 and pets away from the treadmill at all times.
3. Consult your health care provider before beginning any exercise program. This is especially important for persons over age 35 or persons with pre-existing health problems.
4. Consult your health care provider before beginning or continuing any exercise program during pregnancy. Use the treadmill only as authorized by your health care provider.
5. The treadmill is not intended for use by persons with reduced physical, sensory, or mental capabilities or lack of experience and knowledge, unless they have been given supervision or instruction concerning the use of the treadmill by someone responsible for their safety.
6. Use the treadmill only as described in this manual.
7. The treadmill is intended for home use only. Do not use the treadmill in any commercial, rental, or institutional setting.
8. Keep the treadmill indoors, away from moisture and dust. Do not put the treadmill in a garage or covered patio, or near water.
9. Place the treadmill on a level surface, with at least 8 ft. (2.4 m) of clearance behind it and 2 ft. (0.6 m) on each side. Do not place the treadmill on any surface that blocks air openings. To protect the floor or carpet from damage, place a mat under the treadmill.
10. Do not operate the treadmill where aerosol products are used or where oxygen is being administered.
11. The treadmill should be used only by persons weighing 300 lbs. (136 kg) or less.
12. Never allow more than one person on the treadmill at a time.
13. Wear appropriate exercise clothes while using the treadmill. Do not wear loose clothes that could become caught in the treadmill. Athletic support clothes are recommended for both men and women. Always wear athletic shoes. Never use the treadmill with bare feet, wearing only stockings, or in sandals.
14. Plug the power cord into a surge suppressor (not included), and plug the surge suppressor into an appropriate outlet (see page 17). To avoid overloading the circuit, do not plug other electrical devices, except for low-power devices such as cell phone chargers, into the surge suppressor or into an outlet on the same circuit.
15. Use only a surge suppressor that meets all of the specifications described on page 17. To purchase a surge suppressor, see your local NORDICTRACK dealer, see the front cover of this manual, or see your local electronics store.
16. Failure to use a properly functioning surge suppressor could result in damage to the control system of the treadmill. If the control system is damaged, the walking belt may slow, accelerate, or stop unexpectedly, which may result in a fall and serious injury.
17. Keep the power cord away from heated surfaces.
18. Never move the walking belt while the power is turned off. Do not operate the treadmill if the power cord or plug is damaged, or if the treadmill is not working properly. (See MAINTENANCE AND TROUBLESHOOTING on page 31 if the treadmill is not working properly.)

19. Read, understand, and test the emergency stop procedure before using the treadmill (see HOW TO TURN ON THE CONSOLE on page 19). Always wear the clip while using the treadmill.

20. Be careful when mounting and dismounting the treadmill. Always stand on the foot rails when starting or stopping the walking belt. Always hold the handrails while using the treadmill.

21. When a person is walking on the treadmill, the noise level of the treadmill will increase.

22. Keep fingers, hair, and clothing away from the moving walking belt.

23. The treadmill is capable of high speeds. Adjust the speed in small increments to avoid sudden jumps in speed.

24. Never leave the treadmill unattended while it is running. Always remove the key, press the power switch into the off position (see the drawing on page 6 for the location of the power switch), and unplug the power cord when the treadmill is not in use.

25. Do not attempt to move the treadmill until it is properly assembled. (See ASSEMBLY on page 8 and HOW TO FOLD AND MOVE THE TREADMILL on page 30.) You must be able to safely lift 45 lbs. (20 kg) to move the treadmill.

26. When folding or moving the treadmill, make sure that the storage latch is holding the frame securely in the storage position. Do not operate the treadmill while it is folded.

27. Do not change the incline of the treadmill by placing objects under the treadmill.

28. Never insert any object into any opening on the treadmill.

29. Inspect and properly tighten all parts each time the treadmill is used. Replace any worn parts immediately. Use only manufacturer-supplied parts.

30. **DANGER:** Always unplug the power cord immediately after use, before cleaning the treadmill, and before performing the maintenance and adjustment procedures described in this manual. Never remove the motor hood unless instructed to do so by an authorized service representative. Servicing other than the procedures in this manual should be performed by an authorized service representative only.

31. Over exercising may result in serious injury or death. If you feel faint, if you become short of breath, or if you experience pain while exercising, stop immediately and cool down.

SAVE THESE INSTRUCTIONS

PROTECT

YOUR FITNESS EQUIPMENT WITH AN EXTENDED SERVICE PLAN



Your new fitness equipment is not an ordinary purchase; it is an investment in your health and well being for years to come.

As the leading provider of manufacturer's extended service plans, iFIT strives to protect your equipment and your future.

Please review the following service plans and find one that best fits your needs.

PREVENTIVE MAINTENANCE SERVICE PLANS

Equipment Price	3-Year Plan	5-Year Plan
$0.00 to $1000.00	$199.99	$289.99
$1001.00 to $1500.00	$259.99	$379.99
$1501.00 to $2500.00	$339.99	$489.99
(Bikes/Systems Only) $0.00 to $2500.00	$139.99	NA

Features:

- Includes an annual preventive maintenance and performance check at your convenience
- Unlimited in-home repairs; no shipping required
- Covers parts and labor on all manufacturer's defects, as well as wear and tear on parts
- Up to 5 years of coverage available

STANDARD SERVICE PLANS

Equipment Price	1-Year Plan	2-Year Plan	3-Year Plan
$0.00 to $300.00	$29.99	$39.99	$59.99
$301.00 to $1000.00	$89.99	$119.99	$149.99
$1001.00 to $2000.00	$109.99	$139.99	$179.99
$2001.00 to $3000.00	$179.99	$209.99	$239.99

Features:

- Unlimited in-home repairs; no shipping required
- Covers parts and labor on all manufacturer's defects, as well as wear and tear on parts
- Up to 3 years of coverage available

To protect your fitness equipment today, please call Member Care at 1-800-677-3838.
Or, visit us online at www.utserv.com.

UTS
UNIVERSAL TECHNICAL SERVICES

BEFORE YOU BEGIN

Thank you for selecting the new NORDICTRACK® COMMERCIAL 1750 treadmill. The COMMERCIAL 1750 treadmill provides an impressive selection of features designed to make your workouts at home more effective and enjoyable.

For your benefit, read this manual carefully before you use the treadmill. If you have questions after reading this manual, please see the front cover of this manual. To help us assist you, note the product model number and serial number before contacting us. The model number and the location of the serial number decal are shown on the front cover of this manual.

Before reading further, please familiarize yourself with the parts that are labeled in the drawing below.

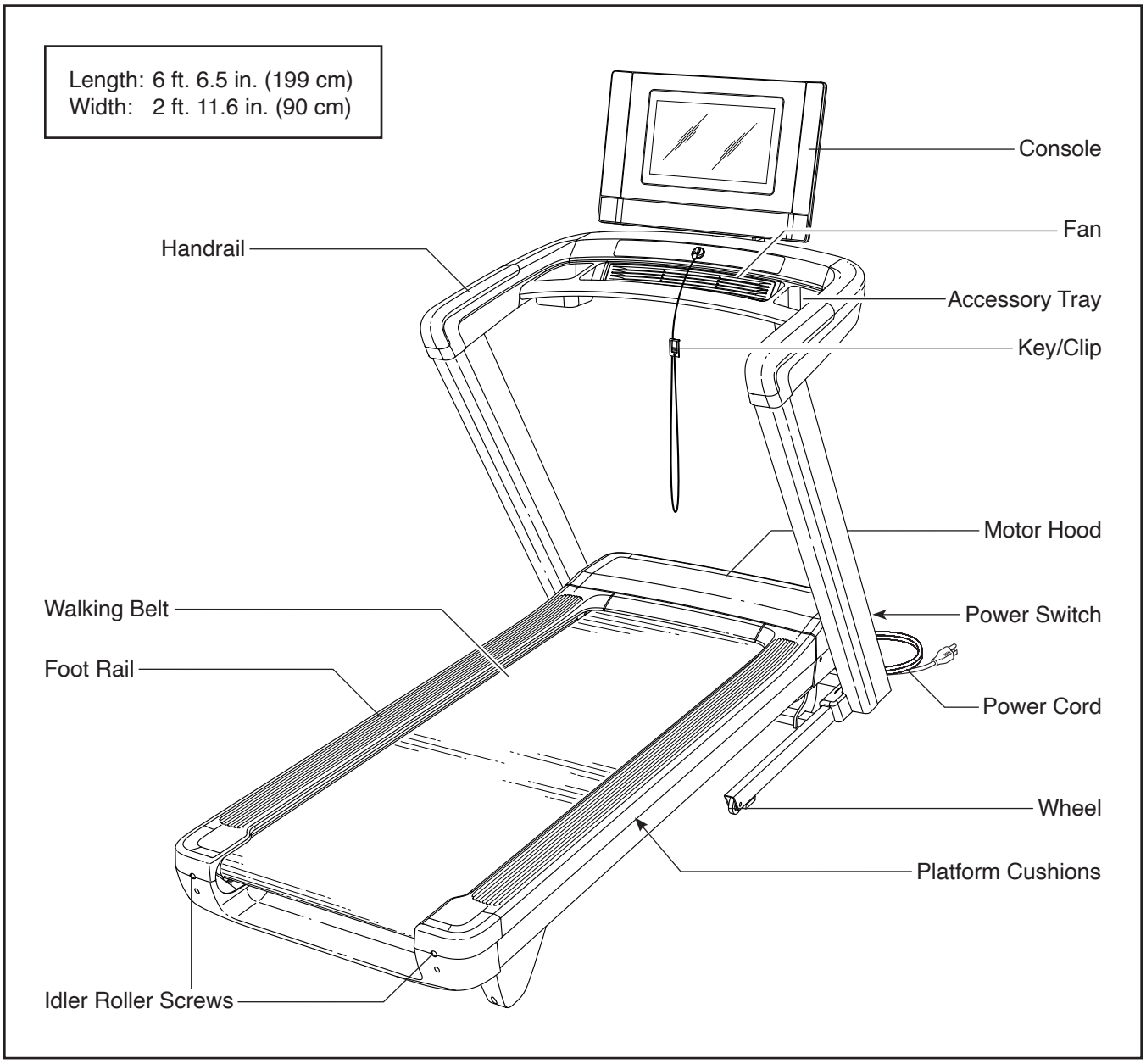

PART IDENTIFICATION CHART

Use the drawings below to identify small parts used for assembly. The number in parentheses below each drawing is the key number of the part, from the PART LIST near the end of this manual. The number following the key number is the quantity used for assembly. **Note: If a part is not in the hardware kit, check to see whether it is preattached. Extra parts may be included.**

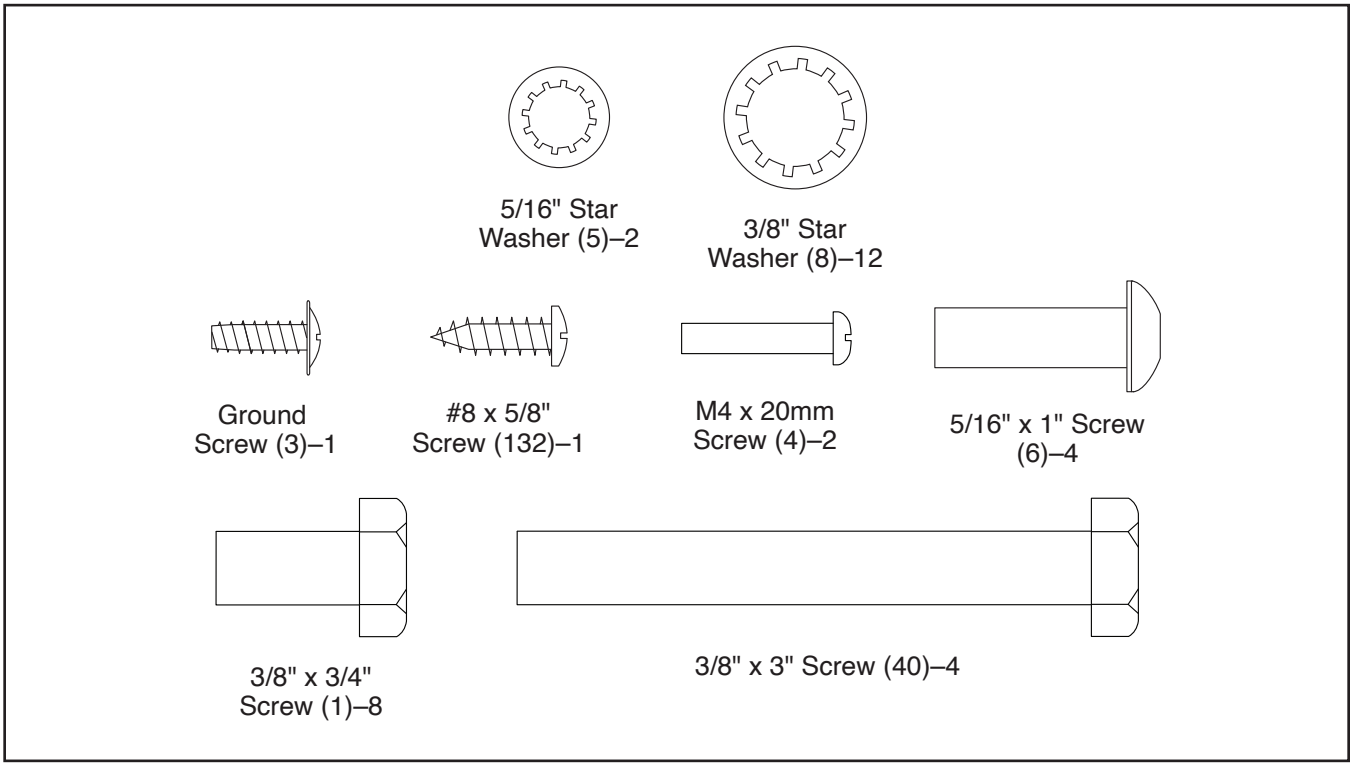

ASSEMBLY

- Assembly requires two persons.
- Place all parts in a cleared area and remove the packing materials. Do not dispose of the packing materials until you finish all assembly steps.
- After shipping, there may be an oily substance on the exterior of the treadmill. This is normal. If there is an oily substance on the treadmill, wipe it off with a soft cloth and a mild, non-abrasive cleaner.
- Left parts are marked “L” or “Left” and right parts are marked “R” or “Right.”
- To identify small parts, see page 7.
- Assembly requires the included tools and the following tools:

one Phillips screwdriver 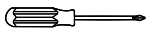

one adjustable wrench 

Note: One or more of the included tools may be needed to make adjustments in the future. To avoid damaging parts, do not use power tools for assembly or adjustment.

1. **Go to my.nordictrack.com and register your product.**
   - documents your ownership
   - activates your warranty
   - ensures priority customer support if assistance is ever needed

1

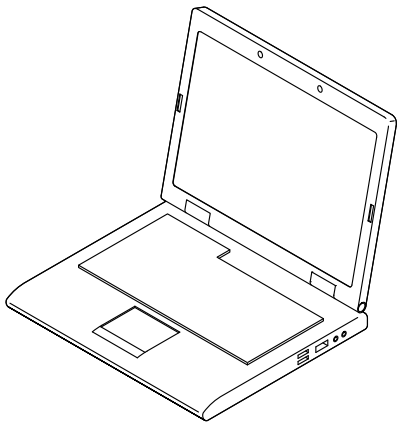

2. **Make sure that the power cord is unplugged.**

   Remove any ties securing the Upright Wire (92) to the right side of the Upright Base (101).

   Next, identify the Right Upright (94), and have a second person hold it near the Upright Base (101).

   See the inset drawing. Locate the wire tie (A) in the Right Upright (94). Tie the wire tie through the wire pull (B) on the Upright Wire (92). Then, insert the wire pull and the Upright Wire into the Right Upright.

   Then, pull the upper end of the wire tie (A) until the Upright Wire (92) is routed through the Right Upright (94). **Do not untie the wire tie yet.**

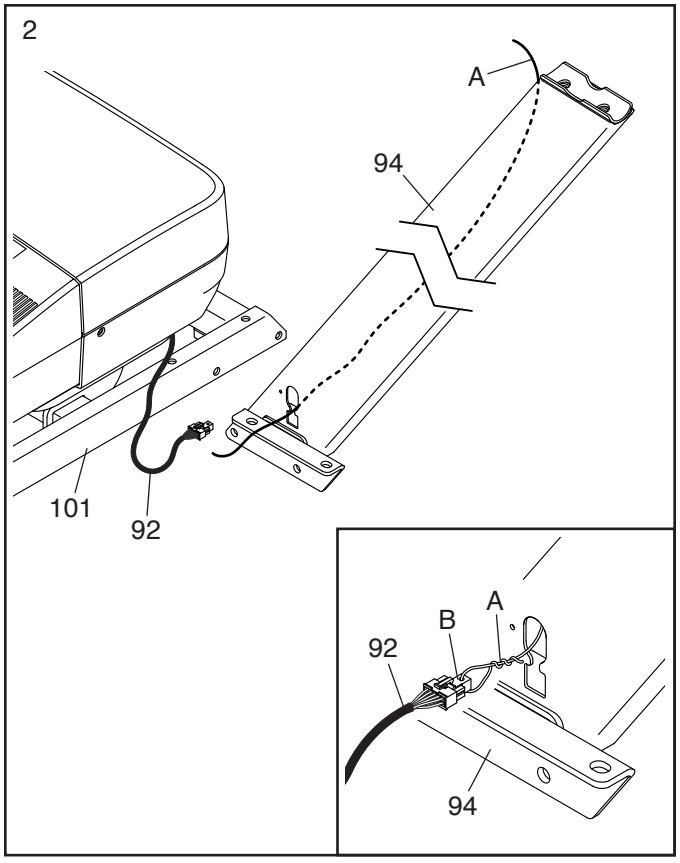

3. Remove and discard the indicated screw (C) in the Right Upright (94). Then, attach the ground wire (D) to the Right Upright with a Ground Screw (3).

   See the inset drawing. Locate the small ear (E) on the Grommet (81) on the Upright Wire (92). Insert the ear into the square hole (F) in the Right Upright (94), and then press the Grommet into the square hole.

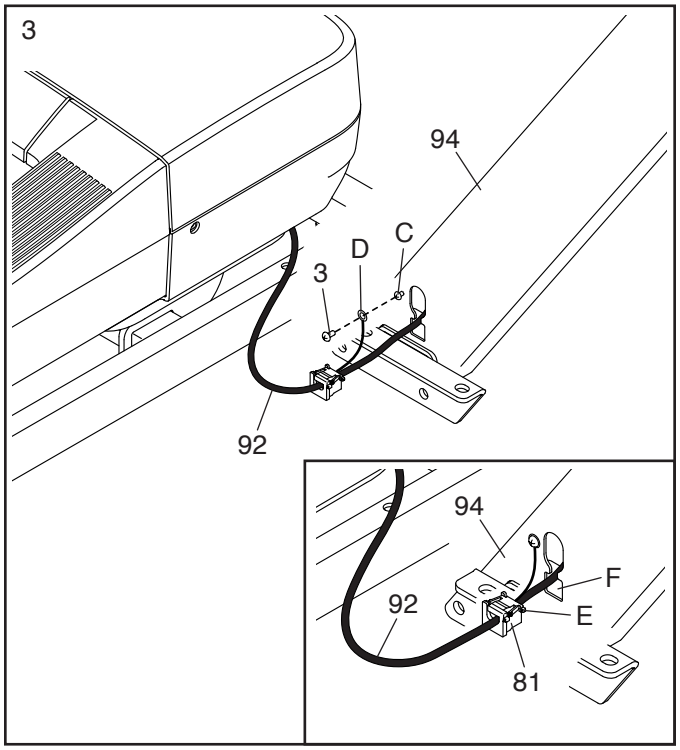

4. **Do not to pinch the Upright Wire (92) during this step.** Have a second person hold the Right Upright (94) against the Upright Base (101).

   Insert two 3/8" x 3/4" Screws (1) with two 3/8" Star Washers (8) into the top of the bracket on the Right Upright (94), and partially tighten the Screws into the Upright Base (101); **do not fully tighten the Screws yet.**

   Finish attaching the Right Upright (94) with two additional 3/8" x 3/4" Screws (1) and two additional 3/8" Star Washers (8); **do not fully tighten the Screws yet.**

   Attach the Left Upright (not shown) in the same way. Note: There is not a wire on the left side.

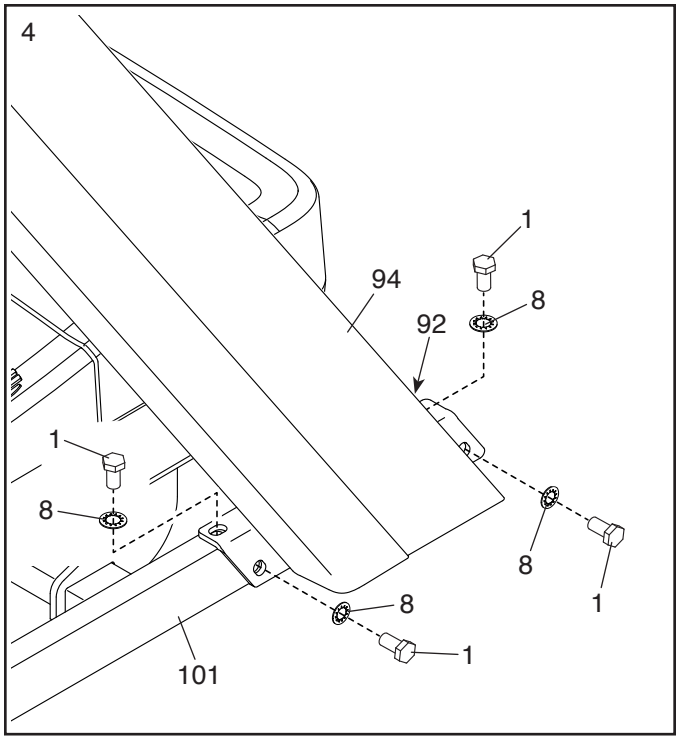

5. **Do not pinch the Wires (91, 92) during this step.** Have a second person hold the handrail assembly (E) on the Left and Right Uprights (93, 94).

   Attach the handrail assembly (E) with four 3/8" x 3" Screws (40) and four 3/8" Star Washers (8); **start all four Screws, and then tighten them.**

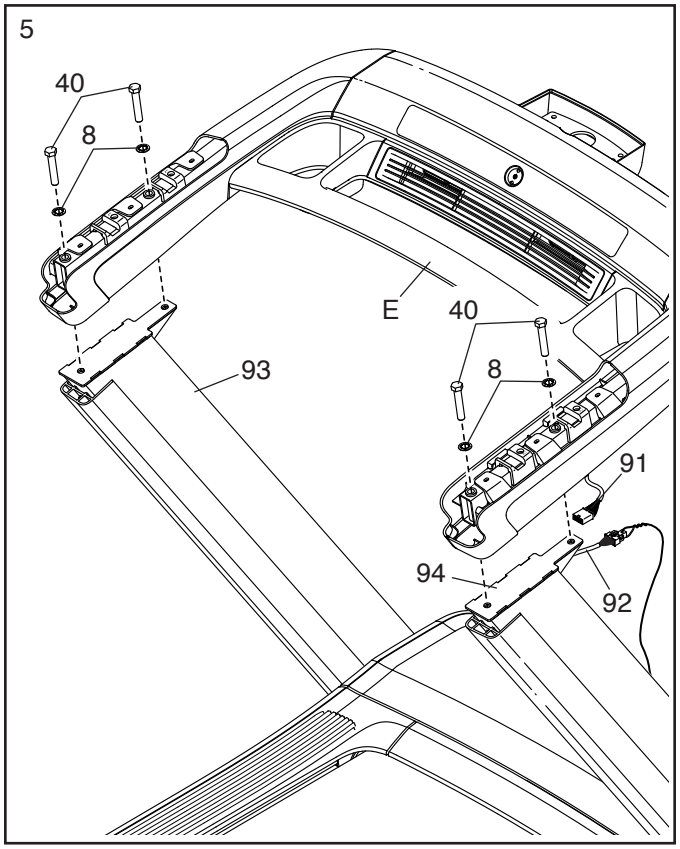

6. **See the inset drawing.** Press the small latch (H) on the connector on the Upright Wire (92), and remove the wire pull (B). Discard the wire pull.

   Next, connect the Upright Wire (92) to the Handrail Wire (91).

   IMPORTANT: The wire connectors should slide together easily and snap into place with an audible click. You must connect the wires properly for your treadmill to function properly.

   Then, insert the connectors and the excess wire into the Right Upright (94).

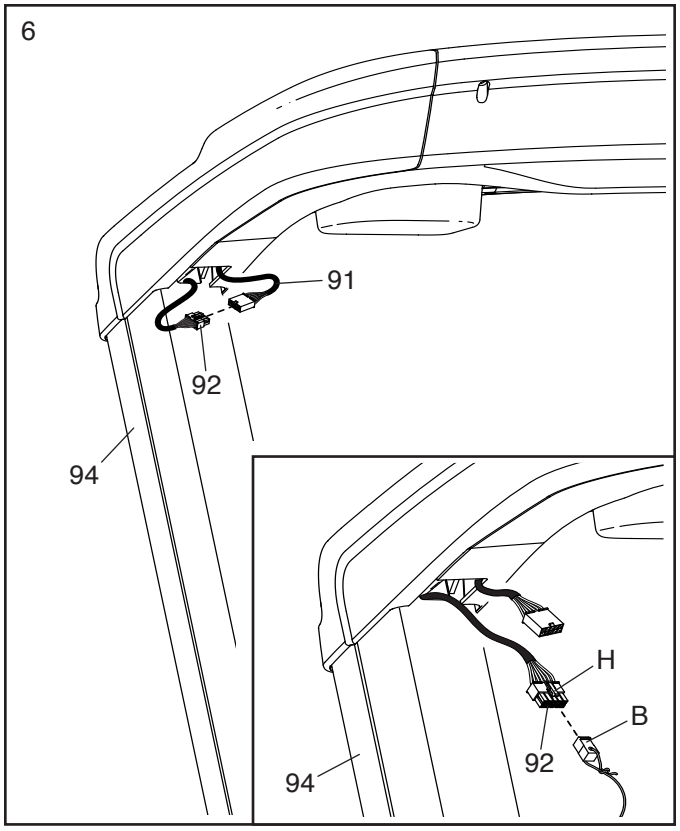

7. Identify the Right Handrail Cover (84). Insert the front edge of the Right Handrail Cover into the top of the handrail assembly (E) on the right side of the treadmill as shown. Then, press down on the top of the Right Handrail Cover until it snaps into place.

   Attach the Left Handrail Cover (83) to the left side of the handrail assembly (E) in the same way.

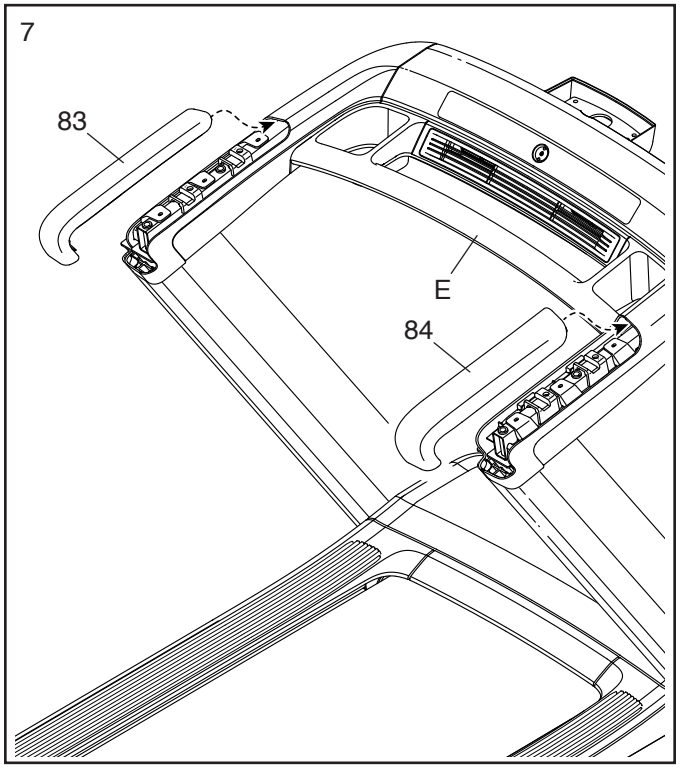

8. **Do not pinch the wires (G) during this step.** Have a second person hold the console assembly (F) near the handrail assembly (E). **IMPORTANT: Make sure that the console assembly is properly oriented so that the curved edge (H) of the Console Pivot Bracket (117) faces the front (I) of the handrail assembly.**

   Insert the wires (G) into the round hole in the handrail assembly (E) as you set the console assembly (F) on the handrail assembly.

   Attach the console assembly (F) with two 5/16" x 1" Screws (6); **do not fully tighten the Screws yet.**

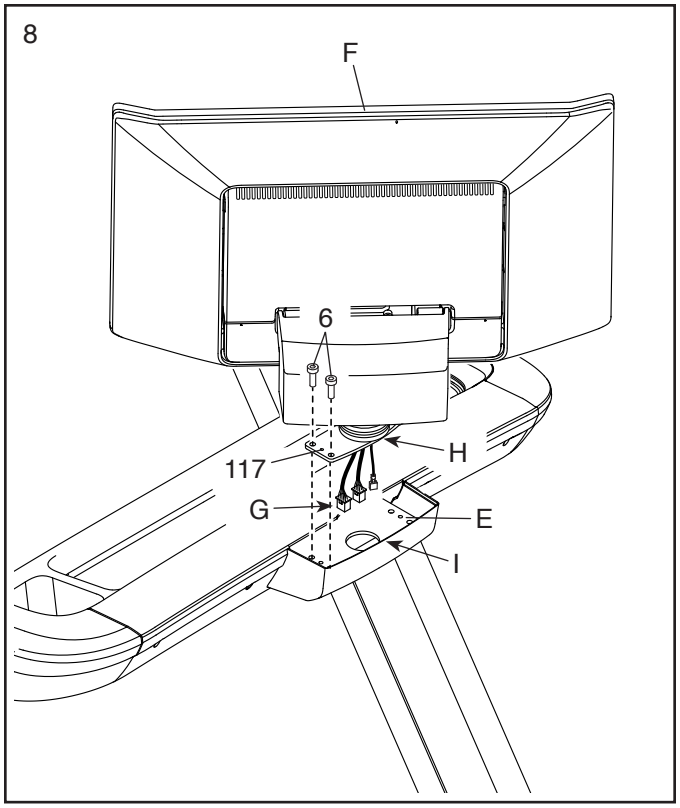

9. **Rotate the console assembly (F) so that it faces the opposite direction.** Tighten two 5/16" x 1" Screws (6) into the Console Pivot Bracket (117); **start both Screws, and then firmly tighten them.**

   Next, identify the Left Pivot Cover (115). Attach the Left Pivot Cover to the Console Pivot Bracket (117) with an M4 x 20mm Screw (4); **do not overtighten the Screw.**

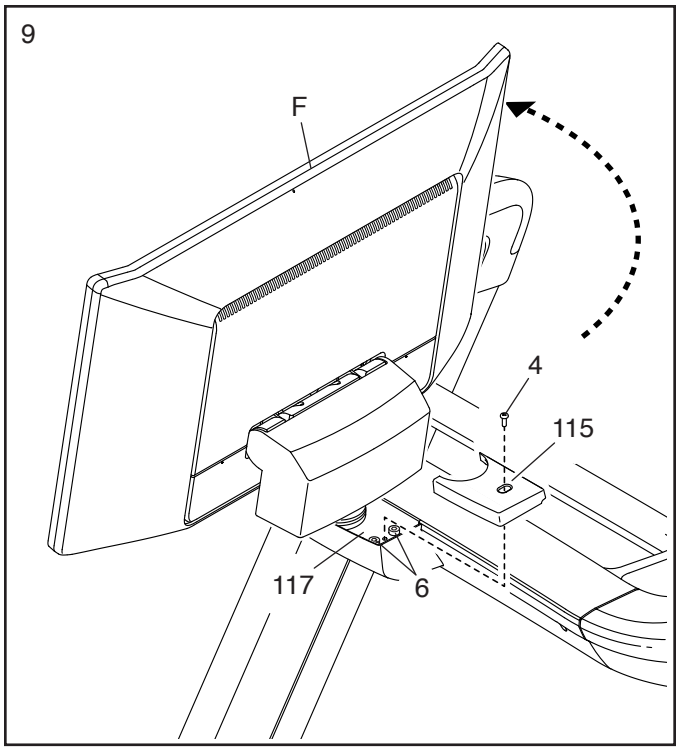

10. **Rotate the console assembly (F) back to its original position.** Firmly tighten the two 5/16" x 1" Screws (6) that you attached in step 8.

    Next, identify the Right Pivot Cover (116). Attach the Right Pivot Cover to the Console Pivot Bracket (117) with an M4 x 20mm Screw (4); **do not overtighten the Screw.**

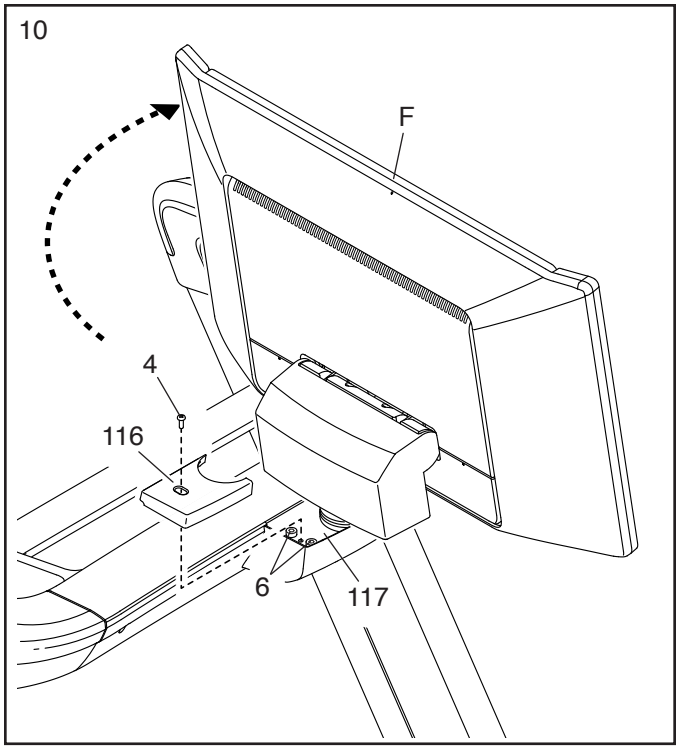

11. **Do not pinch the wires (J, K) during this step.**

    Connect the indicated wires (J, K). **IMPORTANT: The wire connectors should slide together easily and snap into place with an audible click.**

    Next, position the wires (J, K) inside of the opening in the handrail assembly (E). Then, insert the front edge of the Access Panel (118) into the opening in the handrail assembly, and attach the Access Panel with a #8 x 5/8" Screw (132): **do not overtighten the Screw.**

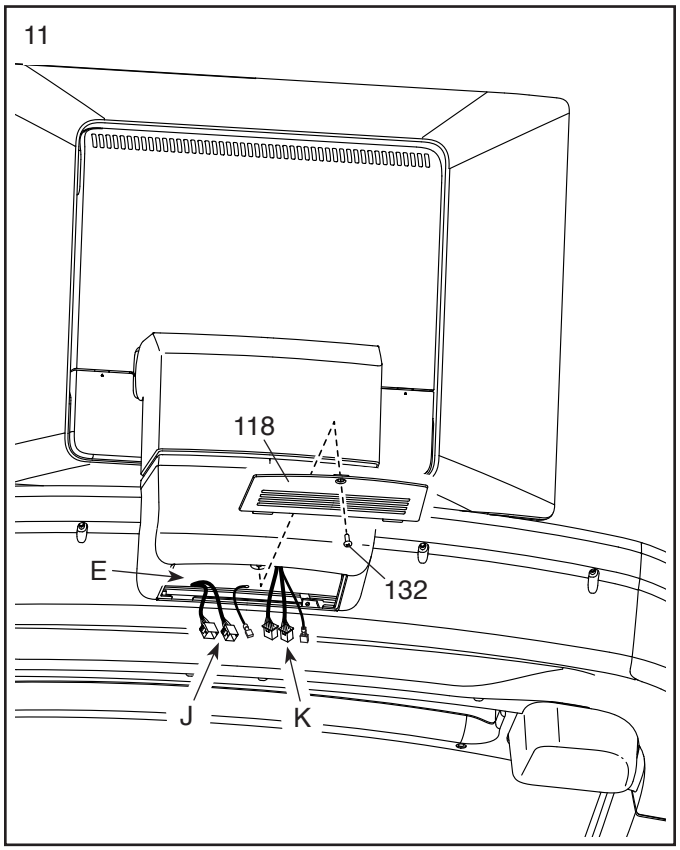

12. Raise the Frame (66) to the position shown. **IMPORTANT: Have a second person hold the Frame until step 14 is completed.**

Remove the two 5/16" x 3/4" Screws (9) from the Latch Crossbar (62). Note: The Latch Crossbar is not preattached to the treadmill.

Next, orient the Latch Crossbar (62) as shown. **Make sure that the "This side toward belt" sticker (L) is facing the treadmill.** Attach the Latch Crossbar to the brackets (M) on the Frame (66) with the two 5/16" x 3/4" Screws (9) that you just removed and two 5/16" Star Washers (5).

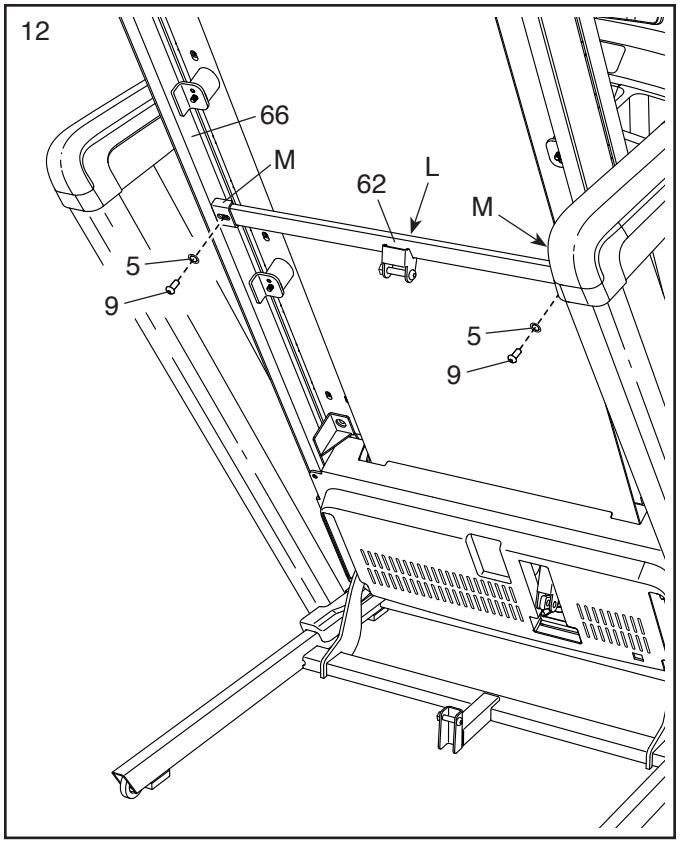

13. Remove the 5/16" Nut (12), the two 3/8" Thrust Washers (37), and the 5/16" x 1 3/4" Bolt (10) from the bracket on the Upright Base (101). **Note: If one of the 5/16" Bushings (130) comes out, reinsert it.**

Next, orient the Storage Latch (65) as shown.

Attach the lower end of the Storage Latch (65) to the bracket on the Upright Base (101) with the 5/16" x 1 3/4" Bolt (10), the two 3/8" Thrust Washers (37), and the 5/16" Nut (12).

Then, raise the Storage Latch (65) to a vertical position, and remove the tie (N).

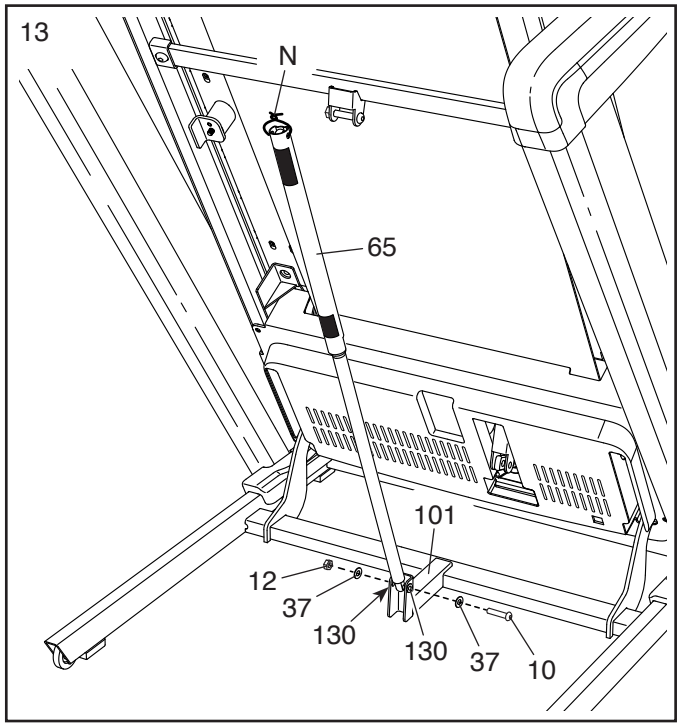

14. Remove the 5/16" Nut (12) and the 5/16" x 2 1/4" Bolt (11) from the bracket on the Latch Crossbar (62).

    Next, align the upper end of the Storage Latch (65) with the bracket on the Latch Crossbar (62), and insert the 5/16" x 2 1/4" Bolt (11) through the bracket and the Storage Latch. **This will push a spacer (O) out of the Storage Latch; discard the spacer. Note: If one of the 5/16" Bushings (130) comes out, reinsert it.**

    Next, tighten the 5/16" Nut (12) onto the 5/16" x 2 1/4" Bolt (11). **Do not overtighten the Nut; the Storage Latch (65) must be able to pivot.**

    Then, lower the Frame (66) (see HOW TO LOWER THE TREADMILL FOR USE on page 30).

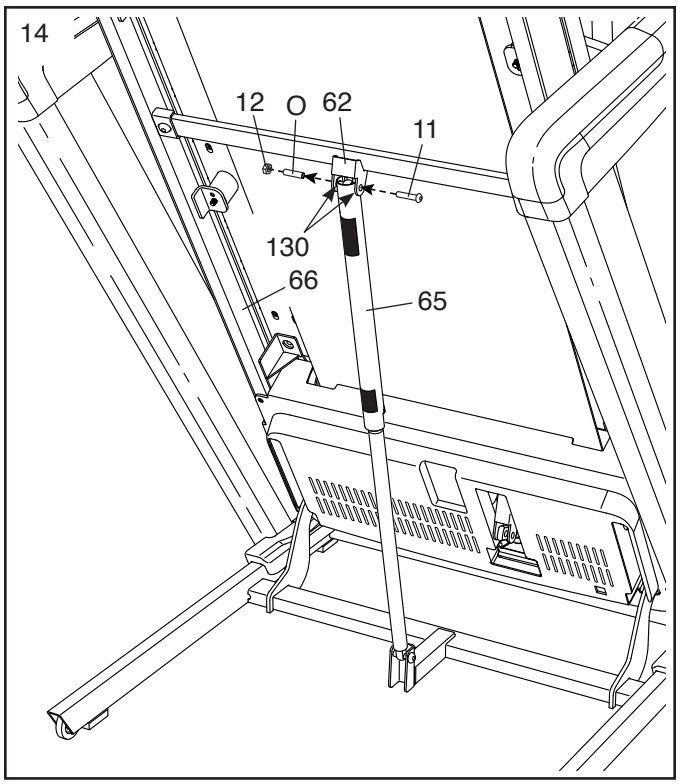

15. Firmly tighten the four 3/8" x 3/4" Screws (1) in the Right Upright (94).

    Repeat this step on the left side of the treadmill.

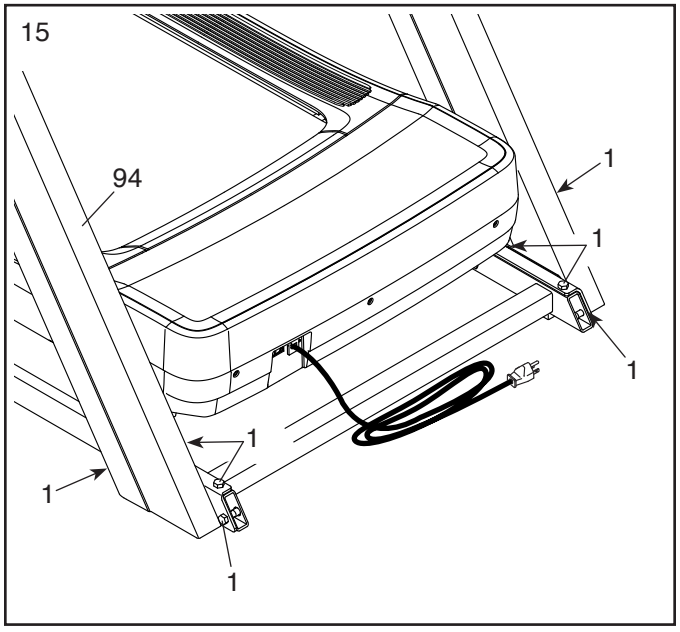

16. Identify the Right Base Cover (98). Slide the Right Base Cover under the Upright Wire (92) and onto the Upright Base (101). **Make sure that the Right Base Cover is under the Upright Wire.**

    Repeat this step on the left side of the treadmill with the Left Base Cover (not shown). Note: There is not a wire on the left side.

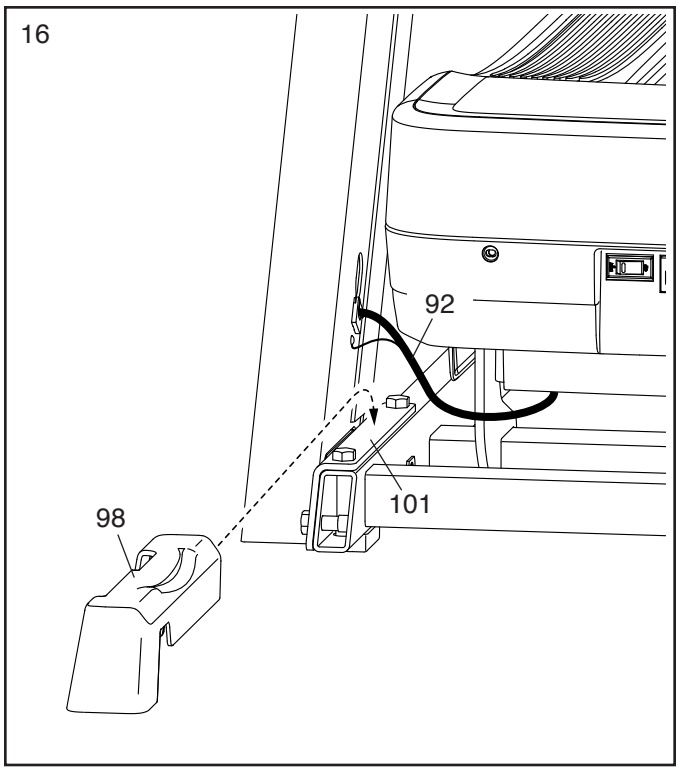

17. **Make sure that all parts are properly tightened before you use the treadmill.** If there are sheets of plastic on the treadmill decals, remove the plastic. To protect the floor or carpet, place a mat under the treadmill. To avoid damage to the console, keep the treadmill out of direct sunlight. Keep the included tools in a secure place; one or more of the tools may be needed to make adjustments to the treadmill in the future. Note: Extra hardware may be included.

HOW TO PLUG IN THE POWER CORD

USE A SURGE SUPPRESSOR

Your treadmill, like other electronic equipment, can be damaged by sudden voltage changes in your home's power. Voltage surges, spikes, and noise interference can result from weather conditions or from other appliances being turned on or off. **To decrease the risk of damaging the treadmill, always use a surge suppressor (A) with the treadmill. To purchase a surge suppressor, see precaution 15 on page 3.**

Use only a surge suppressor (A) that is UL 1449 listed as a transient voltage surge suppressor (TVSS). The surge suppressor must have a UL suppressed voltage rating of 400 volts or less and a minimum surge dissipation of 450 joules. The surge suppressor must also be electrically rated for 120 volts AC and 15 amps. There must be a monitoring light on the surge suppressor to indicate whether it is functioning properly. **Failure to use a properly functioning surge suppressor could result in damage to the control system of the treadmill and serious injury to users.**

PLUG IN THE POWER CORD

The treadmill must be grounded. If it should malfunction or break down, grounding provides a path of least resistance for electric current to reduce the risk of electric shock. The treadmill power cord (B) has a plug with a grounding pin (C) (see drawing 1 on this page).

⚠DANGER: Improper connection of the power cord increases the risk of electric shock. Do not modify the plug—if it will not fit an outlet, have a proper outlet installed by a qualified electrician. If you are unsure whether the treadmill is properly grounded, contact a qualified electrician.

Plug the power cord (B) into a surge suppressor (A), and plug the surge suppressor into an appropriate outlet (D) that is properly installed and grounded in accordance with all local codes and ordinances. **The outlet must be on a nominal 120-volt circuit capable of carrying 15 or more amps. To avoid overloading the circuit, do not plug other electrical devices, except for low-power devices such as cell phone chargers, into the surge suppressor or into an outlet on the same circuit. IMPORTANT: If the treadmill is connected to an AFCI-equipped outlet and your circuit breaker trips repeatedly when the treadmill is used, see the front cover of this manual to purchase an arc filter.**

1

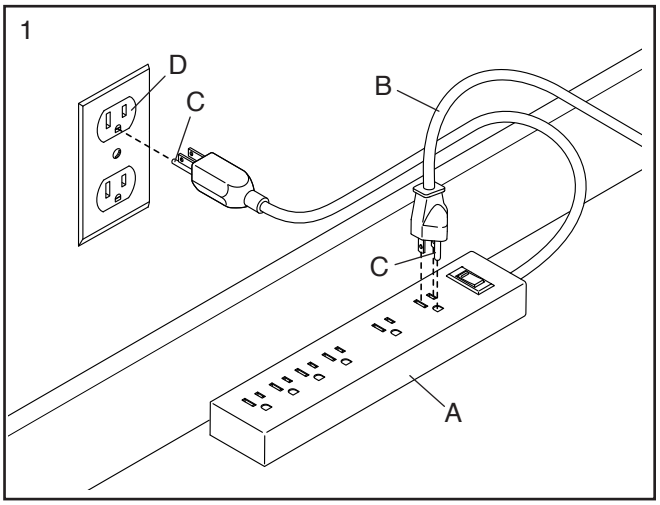

A temporary adapter (E) may be used to connect the surge suppressor (A) to a 2-pole receptacle (F) if a properly grounded outlet is not available.

2

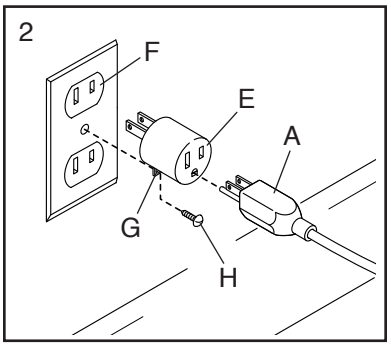

The lug (G) or wire extending from the adapter must be connected with a metal screw (H) to a permanent ground such as a properly grounded outlet box cover. **Some 2-pole receptacle outlet box covers are not grounded. Before using an adapter, contact a qualified electrician to determine whether the outlet box cover is grounded. The temporary adapter should be used only until a properly grounded outlet can be installed by a qualified electrician.**

HOW TO USE THE TREADMILL

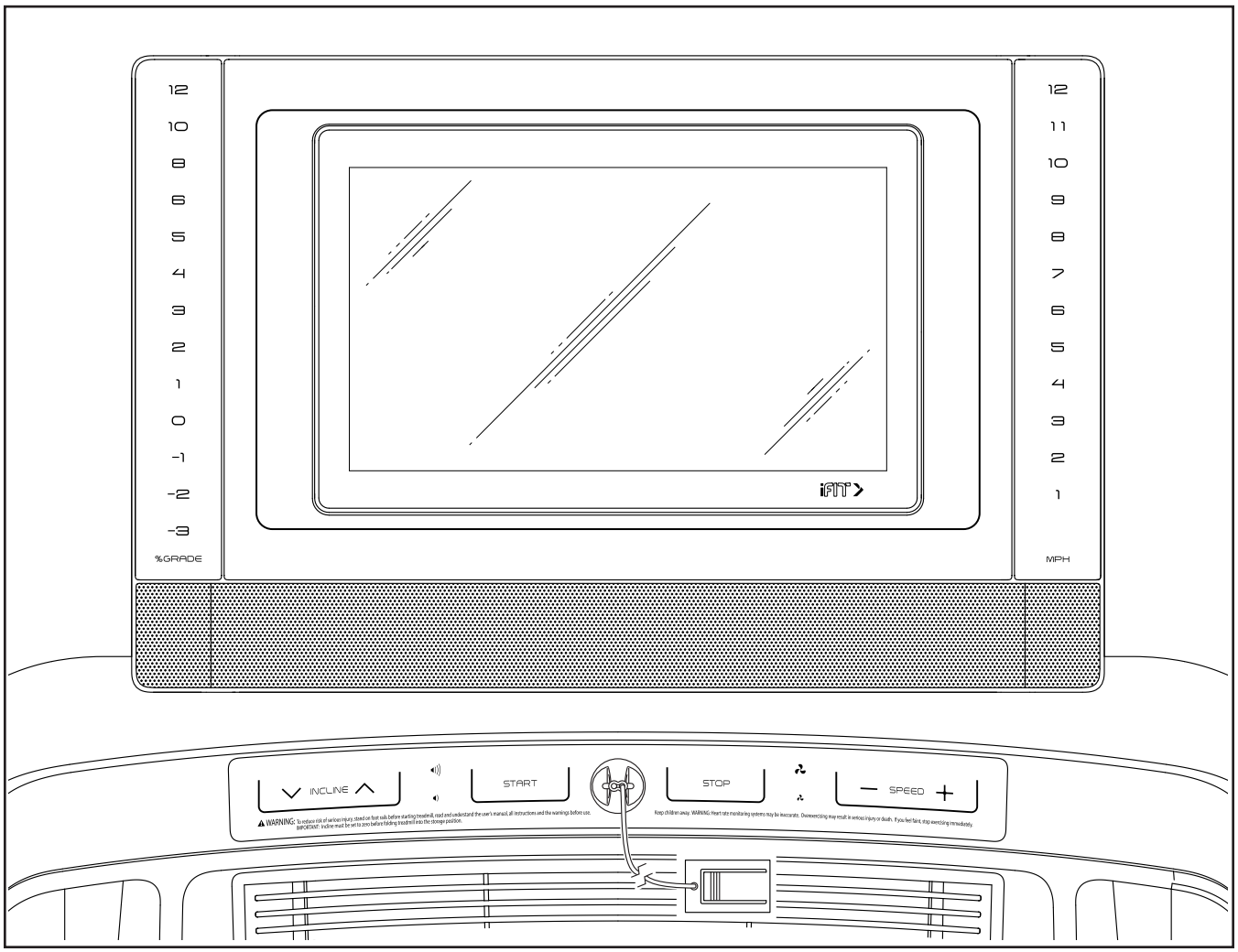

FEATURES OF THE CONSOLE

The advanced console offers a selection of features designed to make your workouts more effective and enjoyable.

When you use the manual mode of the console, you can change the speed and incline of the treadmill with a touch of a button. As you exercise, the console will display instant exercise feedback.

You can even monitor your heart rate when you use a compatible heart rate monitor. **To purchase a compatible heart rate monitor, see page 29.**

The console also features wireless technology that enables the console to connect to iFIT®. With iFIT, you can choose from a rotating selection of featured workouts that automatically control the speed and incline of the treadmill as iFIT trainers guide you through immersive exercise sessions.

With an iFIT subscription, you can access a large and varied library of thousands of on-demand destination and studio workouts, create your own workouts, track your workout results, and access many other features.

To turn on and turn off the console, see page 19. **To learn how to use the touch screen,** see page 19. **To set up the console,** see page 20.

HOW TO TURN ON THE CONSOLE

IMPORTANT: If the treadmill has been exposed to cold temperatures, allow it to warm to room temperature before you turn on the console. If you do not do this, you may damage the console displays or other electrical components.

Plug in the power cord (see page 17). Next, locate the power switch on the treadmill frame near the power cord. Press the power switch into the reset position (A).

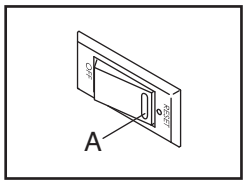

Next, **stand on the foot rails of the treadmill.** Locate the clip (B) attached to the key (C), and slide the clip securely onto the waistband of your clothes. Then, insert the key into the console. **Note: It may take up to a few minutes for the console to be ready for use. IMPORTANT: In an emergency, the key can be pulled from the console, causing the walking belt to slow to a stop. Test the clip by carefully taking a few steps backward; if the key is not pulled from the console, adjust the position of the clip.**

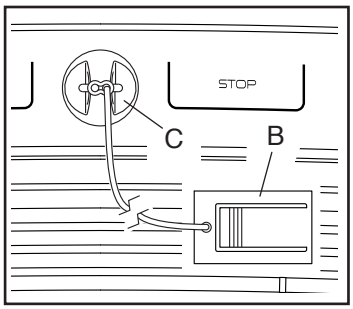

Note: The console can display speed and distance in either miles or kilometers. To find which unit of measurement is selected, see HOW TO CHANGE CONSOLE SETTINGS on page 26.

HOW TO TURN OFF THE CONSOLE

When you are finished using the treadmill, first remove the key from the console and put it in a secure place.

Then, press the power switch into the off position and unplug the power cord. **IMPORTANT: If you do not do this, the electrical components of the treadmill may wear prematurely.**

IMPORTANT: Before you fold the treadmill, make sure that the incline is adjusted to the appropriate level (see HOW TO FOLD AND MOVE THE TREADMILL on page 30).

HOW TO USE THE TOUCH SCREEN

The console features a tablet with a full-color touch screen. The following information will help you become familiar with the tablet's advanced technology:

- The console functions similarly to other tablets. You can slide or flick your finger against the screen to move certain images on the screen, such as the displays in a workout.

- The screen is not pressure sensitive. You do not need to press hard on the screen.

- To type information into a text box, first touch the text box to view the keyboard. To use numbers or other characters on the keyboard, touch *?123*. To view more characters, touch *~[<*. Touch *?123* again to return to the number keyboard. To return to the letter keyboard, touch ABC. To use a capital character, touch the shift button (upward-facing arrow symbol). To use multiple capital characters, touch the shift button again. To return to the lowercase keyboard, touch the shift button a third time. To clear the last character, touch the clear button (backward-facing arrow with an X symbol).

HOW TO SET UP THE CONSOLE

Before you use the treadmill for the first time, set up the console.

1. **Connect to your wireless network.**

   To use iFIT workouts and to use several other features of the console, the console must be connected to a wireless network. Follow the prompts on the screen to connect the console to your wireless network.

2. **Customize settings.**

   Follow the prompts on the screen to set the desired unit of measurement and your time zone.

   Note: To change these settings later, see HOW TO CHANGE CONSOLE SETTINGS on page 26.

3. **Log into or create an iFIT account.**

   Follow the prompts on the screen to log into your iFIT account or to create an iFIT account.

4. **Check for firmware updates.**

   Touch the menu button (three horizontal lines symbol), touch *Settings,* touch *Maintenance,* and then touch *Update*. The console will check for firmware updates. For more information, see step 6 on page 27.

   Firmware updates are always designed to improve your exercise experience. As a result, new settings and features may not be described in this manual. Also, some settings and features described in this manual may no longer be enabled. Take time to explore the console to learn how new settings and features work.

5. **Calibrate the incline system.**

   Touch the menu button (three horizontal lines symbol), touch *Settings,* touch *Maintenance,* and then touch *Calibrate Incline* and follow the prompts on the screen. The frame will rise and lower as it calibrates. For more information, see step 7 on page 27.

The console is now ready for you to begin working out. The following pages explain the workouts and other features that the console offers.

To use the manual mode, see page 21. **To use a featured workout,** see page 22. **To create a draw-your-own-map workout,** see page 24. **To use an iFIT workout,** see page 25.

To change console settings, see page 26. **To connect to a wireless network,** see page 28.

IMPORTANT: If there are sheets of plastic on the console, remove the plastic. To prevent damage to the walking platform, wear clean athletic shoes while using the treadmill. The first time you use the treadmill, observe the alignment of the walking belt, and center the walking belt if necessary (see page 32).

HOW TO USE THE MANUAL MODE

1. **Insert the key into the console.**

   See HOW TO TURN ON THE CONSOLE on page 19. **Note: It may take up to a few minutes for the console to be ready for use.**

2. **Select the home screen.**

   When you turn on the console, the home screen will appear after the console boots up.

   If a workout is selected, touch the screen and follow the prompts to end the workout and return to the home screen. If a settings menu is selected, touch the back button (arrow symbol) to return to the home screen.

3. **Get ready for the workout.**

   Touch *Manual Start* on the screen or press the Start button on the console to start the walking belt. The walking belt will start to move at a low speed and a warm-up period will begin.

   To use the fan, see page 29.

   To use a heart rate monitor, see page 29.

4. **Change the speed of the treadmill as desired.**

   You can change the speed of the walking belt in the following ways:

   Speed increase and decrease buttons on the console—Each time you press a button, the speed setting will change in small increments; if you hold down the button, the speed setting will change more quickly.

   Numbered speed buttons on the console—Each time you press a button, the walking belt will gradually change speed until it reaches the selected speed setting. To select a speed setting that includes a decimal—such as 3.5 mph—press two numbered buttons in succession. For example, to select a speed setting of 3.5 mph, press the 3 button and then immediately press the 5 button. Note: This feature will not function when the console is set to metric units.

   Speed slider on the screen—When you touch and drag the speed slider, the walking belt will gradually change speed until it reaches the selected speed setting.

   Note: To view the speed slider on the screen, touch the screen in any open space and then touch the controls options to enable this feature.

5. **Change the incline of the treadmill as desired.**

   IMPORTANT: The first time you use the treadmill, you must calibrate the incline system (see step 7 on page 27).

   You can change the incline of the treadmill in the following ways:

   Incline increase and decrease buttons on the console—Each time you press a button, the incline will gradually change until it reaches the selected incline setting.

   Numbered incline buttons on the console—Each time you press a button, the incline will gradually change until it reaches the selected incline setting.

   Incline slider on the screen—When you touch and drag the incline slider, the incline will gradually change until it reaches the selected incline setting.

   Note: To view the incline slider on the screen, touch the screen in any open space and then touch the controls options to enable this feature.

6. **Follow your progress.**

   The console offers several display modes. The display mode that you select will determine which workout information is shown.

   Drag upward on the screen to enter the fullscreen display mode. Drag downward on the screen to view the workout information displays.

   Touch the various workout information displays to view more options. Touch the more button (+ symbol) to view statistics or charts. Touch the screen in any open space to view even more display mode options.

   If desired, adjust the volume level by pressing the volume increase and decrease buttons on the console.

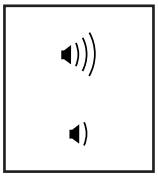

7. **Pause or end the workout.**

   To pause the workout, first **step onto the foot rails.** Next, press the Stop button or touch the screen and then touch the pause option.

   To continue the workout, press the Start button on the console or touch the start option on the screen.

   To end the workout session, **step onto the foot rails.** Next, press the Stop button on the console or touch the screen, touch the pause option, and then touch the stop option.

   Then, follow the prompts on the screen to end the workout and return to the home screen.

8. **When you are finished using the treadmill, turn off the console.**

   See HOW TO TURN OFF THE CONSOLE on page 19.

HOW TO USE A FEATURED WORKOUT

To use a featured workout, the console must be connected to a wireless network (see HOW TO CONNECT TO A WIRELESS NETWORK on page 28).

1. **Insert the key into the console.**

   See HOW TO TURN ON THE CONSOLE on page 19. **Note: It may take up to a few minutes for the console to be ready for use.**

2. **Select the home screen or the workout library.**

   When you turn on the console, the home screen will appear after the console boots up.

   If a workout is selected, touch the screen and follow the prompts to end the workout and return to the home screen. If a settings menu is selected, touch the back button (arrow symbol) to return to the home screen.

   Touch the buttons at the bottom of the screen to select either the home screen (Home button) or the workout library (Browse button).

3. **Select a workout.**

   To select a workout from the home screen or the workout library, simply touch the desired workout button on the screen. Slide or flick the screen to scroll as necessary.

   The featured workouts on your console will change periodically. To save one of the featured workouts for future use, you can add it as a favorite by touching the favorites button (heart symbol). You must be logged into your iFIT account to save a featured workout (see step 3 on page 25).

   To draw your own map for a workout, see HOW TO CREATE A DRAW-YOUR-OWN-MAP WORKOUT on page 24.

   When you select a workout, the screen will show an overview of the workout that includes details such as the duration and distance of the workout and the approximate number of calories you will burn during the workout.

4. **Get ready for the workout.**

   Touch *Start Workout;* the walking belt will start to move at a low speed and a warm-up period will begin.

   To use the fan, see page 29.

   To use Bluetooth headphones, see page 29.

   To use a heart rate monitor, see page 29.

5. **Start the workout.**

   Touch *End Warmup* or walk until the warm-up period ends to start the workout.

   During some workouts, an iFIT trainer will guide you through an immersive video workout. Touch the screen in any open space to view and select music, trainer voice, and volume options for the workout.

   During some workouts, the screen will show a map of the route and a marker indicating your progress. Touch the buttons on the screen to select the desired map options.

   If the speed and/or incline level is too high or too low, you can manually override the setting by pressing the buttons on the console or by touching the sliders on the screen (see steps 4 and 5 on page 21).

   To return to the programmed speed and/or incline settings of the workout, touch *Follow Workout*.

   If the smart adjust feature is enabled, the console will scale the intensity level of the workout automatically based on your manual overrides of the speed and incline settings.

   To enable the smart adjust feature, touch the screen in any open space and then touch the smart adjust toggle.

   IMPORTANT: The calorie goal shown in the workout description is an estimate of the number of calories that you will burn during the workout. The actual number of calories that you burn will depend on various factors, such as your weight. In addition, if you manually change the speed or incline level during the workout, the number of calories that you burn will be affected.

   If the active pulse feature is enabled, the console will scale the intensity level of the workout automatically based on your heart rate when you use a compatible heart rate monitor (see HOW TO USE AN OPTIONAL HEART RATE MONITOR on page 29).

   To enable the active pulse feature, see HOW TO CHANGE CONSOLE SETTINGS on pages 26 and 27.

   To follow your progress with the display modes, see step 6 on page 22.

   To pause or end the workout, see step 7 on page 22.

6. **When you are finished using the treadmill, turn off the console.**

   See HOW TO TURN OFF THE CONSOLE on page 19.

HOW TO CREATE A DRAW-YOUR-OWN-MAP WORKOUT

To use a draw-your-own-map workout, you must be logged into your iFIT account (see step 3 on page 25) and the console must be connected to a wireless network (see HOW TO CONNECT TO A WIRELESS NETWORK on page 28).

1. **Insert the key into the console.**

   See HOW TO TURN ON THE CONSOLE on page 19. **Note: It may take up to a few minutes for the console to be ready for use.**

2. **Select a draw-your-own-map workout.**

   When you turn on the console, the home screen will appear after the console boots up.

   If a workout is selected, touch the screen and follow the prompts to end the workout and return to the home screen. If a settings menu is selected, touch the back button (arrow symbol) to return to the home screen.

   To select a draw-your-own-map workout, touch the Create button at the bottom of the screen.

3. **Draw a workout on the map.**

   Navigate to the area on the map where you want to draw a workout by typing in the search box or by sliding your fingers on the screen. Touch the screen to add the start point for the workout. Then, touch the screen to add the end point for the workout.

   If you want to start and end the workout at the same point, touch *Close Loop* or *Out & Back* in the map options. You can also select whether you want the workout to snap to the road.

   If you make a mistake, touch *Undo* in the map options.

   The screen will display the elevation and distance statistics for the workout.

4. **Save the workout.**

   Touch the options on the screen to save the workout. If desired, enter a title and description for the workout.

5. **Get ready for the workout.**

   Touch *Start Workout;* the walking belt will start to move at a low speed and a warm-up period will begin.

   To use the fan, see page 29.

   To use Bluetooth headphones, see page 29.

   To use a heart rate monitor, see page 29.

6. **Start the workout.**

   Touch *End Warmup* or walk until the warm-up period ends to start the workout. The workout will function in the same way as a featured workout (see step 5 on page 23).

7. **When you are finished using the treadmill, turn off the console.**

   See HOW TO TURN OFF THE CONSOLE on page 19.

HOW TO USE AN IFIT WORKOUT

To use an iFIT workout, you must be logged into your iFIT account (see step 3 below) and the console must be connected to a wireless network (see HOW TO CONNECT TO A WIRELESS NETWORK on page 28).

1. **Insert the key into the console.**

   See HOW TO TURN ON THE CONSOLE on page 19. **Note: It may take up to a few minutes for the console to be ready for use.**

2. **Select the home screen.**

   When you turn on the console, the home screen will appear after the console boots up.

   If a workout is selected, touch the screen and follow the prompts to end the workout and return to the home screen. If a settings menu is selected, touch the back button (arrow symbol) to return to the home screen.

3. **Log in to your iFIT account.**

   If you have not already done so, touch the menu button (three horizontal lines symbol) on the screen and then touch *Log in* to log in to your iFIT account. Follow the prompts on the screen to enter your username and password.

   To switch users within your iFIT account, touch the menu button, touch *Settings,* and then touch *Manage Accounts*. If more than one user is associated with the account, a list of users will appear. Touch the name of the desired user.

4. **Select an iFIT workout from the home screen or the workout library.**

   Touch the buttons at the bottom of the screen to select either the home screen (Home button) or the workout library (Browse button).

   To select an iFIT workout from the home screen or the workout library, simply touch the desired workout button on the screen. Slide or flick the screen to scroll upward or downward if necessary.

   The featured iFIT workouts shown on the home screen will change periodically.

   The workout library contains all of the iFIT workouts available for the treadmill, organized into categories. To search the workout library, touch the search button (magnifying glass symbol) and select the desired filtering options.

   When you select an iFIT workout, the screen will show an overview of the workout that includes details such as the duration of the workout and the approximate number of calories you will burn during the workout.

   You can also select options such as adding the workout to your schedule (see step 5) or marking the workout as a favorite (see step 6).

5. **Schedule an iFIT workout on the calendar if desired.**

   If desired, you can schedule an iFIT workout for a future date. Simply view the overview or workout summary of the desired iFIT workout, touch *Schedule,* and then select the desired date on the calendar.

   When the selected date arrives, the iFIT workout that you scheduled will appear on the home screen.

6. **Create a list of favorite iFIT workouts if desired.**

   To mark an iFIT workout as a favorite, simply view the overview or workout summary of the desired iFIT workout and touch the favorites button (heart symbol).

   To view a list of iFIT workouts that you have marked as your favorites, select the workout library (Browse button) and then touch *My List*.

7. **Get ready for the workout.**

   Touch *Start Workout;* the walking belt will start to move at a low speed and a warm-up period will begin.

   To use the fan, see page 29.

   To use Bluetooth headphones, see page 29.

   To use a heart rate monitor, see page 29.

8. **Start the workout.**

   Touch *End Warmup* or walk until the warm-up period ends to start the workout. The workout will function in the same way as a featured workout (see step 5 on page 23).

9. **When you are finished using the treadmill, turn off the console.**

   See HOW TO TURN OFF THE CONSOLE on page 19.

For more information about iFIT, go to iFIT.com.

HOW TO CHANGE CONSOLE SETTINGS

IMPORTANT: Firmware updates (see step 6) are always designed to improve your exercise experience. As a result, new settings and features may not be described in this manual. Also, some settings and features described in this manual may no longer be enabled. Take time to explore the console to learn how new settings and features work.

1. **Select the settings main menu.**

   First, turn on the console and insert the key into the console (see HOW TO TURN ON THE CONSOLE on page 19). **Note: It may take up to a few minutes for the console to be ready for use.**

   Next, select the home screen (Home button). When you turn on the console, the home screen will appear after the console boots up. If a workout is selected, touch the screen and follow the prompts to end the workout and return to the home screen. If a settings menu is selected, touch the back button (arrow symbol) to return to the home screen.

   Then, touch the menu button (three horizontal lines symbol) on the screen and then touch *Settings*. The settings menu will appear on the screen.

2. **Navigate the settings menus and change settings as desired.**

   Slide or flick the screen to scroll upward or downward if necessary. To view a settings menu, simply touch the menu name. To exit a menu, touch the back button (arrow symbol). You may be able to view and change settings in the following settings menus:

   Account
   - My Profile
   - In Workout
   - Manage Accounts

   Equipment
   - Equipment Info
   - Equipment Settings
   - Maintenance
   - Wi-Fi

   About
   - Legal

3. **Customize workout settings.**

   To customize workout settings and enable workout features, touch *In Workout* and then touch the desired settings.

   When the active pulse feature is enabled, the console will scale the intensity level of workouts based on your heart rate when you use a compatible heart rate monitor. To enable the active pulse feature, touch the active pulse toggle. Then, select your resting and maximum heart rates and adjust related settings as desired.

4. **Customize the unit of measurement and other settings.**

   To customize the unit of measurement, the time zone, or other settings, touch *Equipment Info* or *Equipment Settings* and then touch the desired settings.

   The console can display speed and distance in either standard or metric units of measurement.

5. **View machine information or console app information.**

   Touch *Equipment Info* and then touch *Machine Info* or *App Info* to view information about your treadmill or about the console app.

6. **Update the console firmware.**

   For the best results, regularly check for firmware updates. Touch *Maintenance* and then touch *Update* to check for firmware updates using your wireless network. The update will begin automatically. **IMPORTANT: To avoid damaging the treadmill, do not press the power switch or unplug the power cord while the firmware is being updated.**

   The screen will show the progress of the update. When the update is complete, the console will turn off and then turn back on. If it does not, press the power switch into the off position. Wait for several seconds, and then press the power switch into the reset position. **Note: It may take up to a few minutes for the console to be ready for use.**

   Note: Occasionally, a firmware update may cause the console to function slightly differently. These updates are always designed to improve your exercise experience.

7. **Calibrate the incline system.**

   To calibrate the incline system, touch *Maintenance,* touch *Calibrate Incline,* and then touch *Begin*. The frame will automatically rise to the maximum incline level, lower to the minimum incline level, and then return to the starting position. This will calibrate the incline system. When the incline system is calibrated, touch *Finish*.

   IMPORTANT: Keep pets, feet, and other objects away from the treadmill while the incline system is calibrating. In an emergency, remove the key from the console to stop the incline calibration.

   Note: The incline system may occasionally calibrate automatically when you turn on the treadmill. Wait for the frame to stop moving before you attempt to use the treadmill.

8. **Exit the settings main menu.**

   To exit the settings main menu, touch the back button (arrow symbol).

HOW TO CONNECT TO A WIRELESS NETWORK

To use iFIT workouts and to use several other features of the console, the console must be connected to a wireless network.

1. **Select the home screen.**

   First, turn on the console and insert the key into the console (see HOW TO TURN ON THE CONSOLE on page 19). **Note: It may take up to a few minutes for the console to be ready for use.**

   Next, select the home screen (Home button). When you turn on the console, the home screen will appear after the console boots up. If a workout is selected, touch the screen and follow the prompts to end the workout and return to the home screen. If a settings menu is selected, touch the back button (arrow symbol) to return to the home screen.

2. **Select the wireless network menu.**

   Touch the menu button (three horizontal lines symbol), and then touch *Wi-Fi* to select the wireless network menu.

3. **Enable Wi-Fi®.**

   Make sure that Wi-Fi is enabled. If it is not enabled, touch the *Wi-Fi* toggle to enable it.

4. **Set up and manage a wireless network connection.**

   When Wi-Fi is enabled, the screen will show a list of available networks. Note: It may take a few moments for the list of wireless networks to appear.

   Note: You must have your own wireless network and an 802.11b/g/n router with SSID broadcast enabled (hidden networks are not supported).

   When a list of networks appears, touch the desired network. Note: You will need to know your network name (SSID). If your network has a password, you will also need to know the password.

   Follow the prompts on the screen to enter your password and connect to the selected wireless network. (To use the keyboard, see HOW TO USE THE TOUCH SCREEN on page 19.)

   When the console is connected to your wireless network, a confirmation message will appear on the screen.

   If you are having problems connecting to an encrypted network, make sure that your password is correct. Note: Passwords are case-sensitive.

   Note: The console supports unsecured and secured (WEP, WPA™, and WPA2™) encryption. A broadband connection is recommended; performance depends on connection speed.

   Note: If you have questions after following these instructions, go to my.iFIT.com for assistance.

5. **Exit the wireless network menu.**

   To exit the wireless network menu, touch the back button (arrow symbol).

HOW TO USE THE FAN

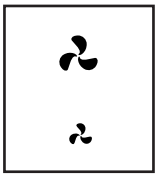

The fan has several speed settings, including an auto mode. While the auto mode is selected, the speed of the fan will automatically increase or decrease as the speed of the walking belt increases or decreases. Press the fan increase and decrease buttons on the console repeatedly to select a fan speed or to turn off the fan.

HOW TO CONNECT HEADPHONES

To connect your Bluetooth headphones to the console, first turn on your headphones, place them in pairing mode, and place them near the console. Then, start a workout. Next, touch the screen in any open space, touch the option to connect your headphones, and select your headphones from the list on the screen.

When your headphones and the console pair successfully, the audio from the console will play through your headphones.

HOW TO USE AN OPTIONAL HEART RATE MONITOR

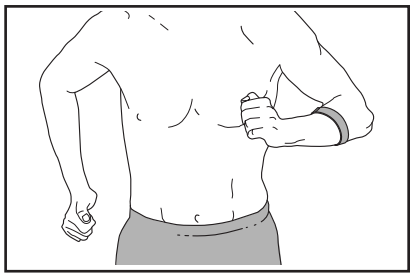

Whether your goal is to burn fat or to strengthen your cardiovascular system, the key to achieving the best results is to maintain the proper heart rate during your workouts. The optional heart rate monitor will enable you to continuously monitor your heart rate while you exercise, helping you to reach your personal fitness goals. **To purchase an optional heart rate monitor, please see the front cover of this manual.**

The console is compatible with all Bluetooth® Smart heart rate monitors.

When your compatible heart rate monitor is turned on and placed in pairing mode, the console will connect to it automatically. When your heartbeat is detected, your heart rate will be shown on the screen.

FCC INFORMATION

This console has been tested and found to comply with the limits for a Class B digital device, pursuant to part 15 of the FCC Rules. These limits are designed to provide reasonable protection against harmful interference in a residential installation. This equipment generates, uses, and can radiate radio frequency energy and, if not installed and used in accordance with the instructions, may cause harmful interference to radio communications. However, there is no guarantee that interference will not occur in a particular installation. If this equipment does cause harmful interference to radio or television reception, which can be determined by turning the equipment off and on, try to correct the interference by one or more of the following measures:

- Reorient or relocate the receiving antenna.
- Increase the separation between the equipment and the receiver.
- Connect the equipment into an outlet on a circuit different from that to which the receiver is connected.
- Consult the dealer or an experienced radio/TV technician for help.

FCC CAUTION: To assure continued compliance, use only shielded interface cables when connecting to computer or peripheral devices. Changes or modifications not expressly approved by the party responsible for compliance could void the user's authority to operate this equipment.

IMPORTANT: To satisfy exposure compliance requirements, the antenna and transmitter in the console must be at least 8 in. (20 cm) from all persons and must not be near or connected to any other antenna or transmitter.

Note: The console contains FCC ID: OMC415321.

HOW TO FOLD AND MOVE THE TREADMILL

HOW TO FOLD THE TREADMILL

To avoid damaging the treadmill, adjust the incline to 0% before you fold the treadmill. Then, remove the key and unplug the power cord. CAUTION: You must be able to safely lift 45 lbs. (20 kg) to raise, lower, or move the treadmill.

1. Hold the metal frame (A) firmly in the location shown by the arrow below. **CAUTION: Do not hold the frame by the plastic foot rails. Bend your legs and keep your back straight.**

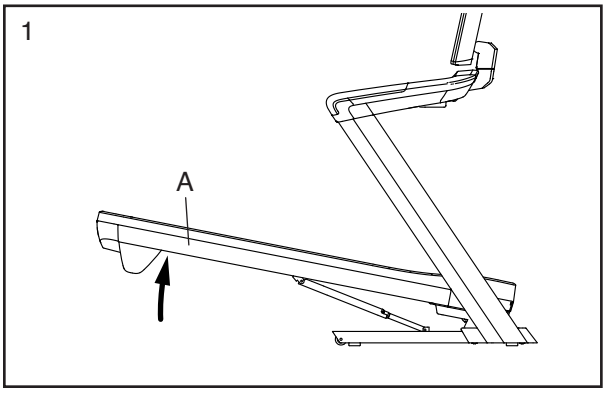

2. Raise the frame (A) until the storage latch (B) locks in the storage position. **CAUTION: Make sure that the storage latch locks.**

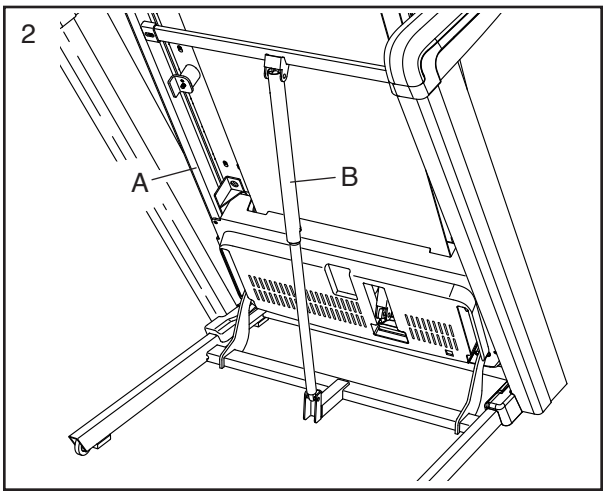

To protect the floor or carpet, place a mat under the treadmill. Keep the treadmill out of direct sunlight. Do not leave the treadmill in the storage position in temperatures above 85°F (30°C).

HOW TO MOVE THE TREADMILL

Before moving the treadmill, fold it as described at the left. **CAUTION: Make sure that the storage latch is in the locked position. Moving the treadmill requires two people. Take any necessary measures to avoid damaging your floor.**

1. Hold the frame (A) and one of the handrails (C), and place one foot against a wheel (D).

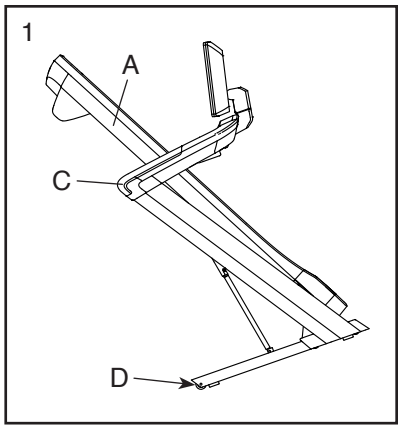

2. Pull back on the handrail until the treadmill will roll on the wheels, and carefully move it to the desired location. **CAUTION: Do not move the treadmill without tipping it back, do not pull on the frame, and do not move the treadmill over an uneven surface.**

3. Place one foot against a wheel, and carefully lower the treadmill.

HOW TO LOWER THE TREADMILL FOR USE

1. Push the upper end of the frame forward, and gently press the upper part of the storage latch with your foot at the same time.

2. While pressing the storage latch with your foot, pull the upper end of the frame toward yourself.

3. Step back and let the frame descend to the floor.

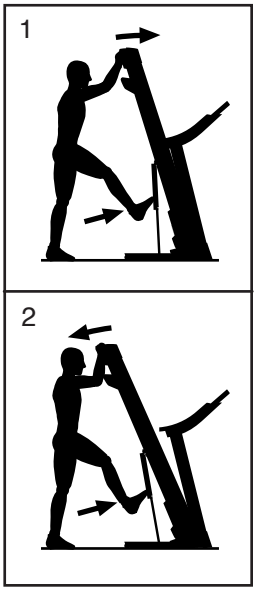

MAINTENANCE AND TROUBLESHOOTING

MAINTENANCE

Regular maintenance is important for optimal performance and to reduce wear. Inspect and properly tighten all parts each time the treadmill is used. **Replace any worn parts immediately.** Use only manufacturer-supplied parts.

Regularly clean the treadmill and keep the walking belt clean and dry. First, **press the power switch into the off position and unplug the power cord.** Wipe exterior parts of the treadmill with a damp cloth and a small amount of mild soap. **IMPORTANT: Do not spray liquids directly onto the treadmill. To avoid damage to the console, keep liquids away from the console.** Then, thoroughly dry the treadmill with a soft towel.

TROUBLESHOOTING

Many problems can be solved with the simple steps in this section. Find the symptom that applies, and follow the steps listed. If further assistance is needed, go to my.iFIT.com, scan the QR code at the right, or call 1-833-680-IFIT (1-833-680-4348).

SYMPTOM: The power does not turn on

a. Make sure that the power cord is plugged into a surge suppressor, and that the surge suppressor is plugged into a properly grounded outlet (see page 17). Use only a surge suppressor that meets all of the specifications described on page 17. **IMPORTANT: If the treadmill is connected to an AFCI-equipped outlet and your circuit breaker trips repeatedly when the treadmill is used, see TROUBLESHOOTING above to purchase an arc filter.**

b. After the power cord has been plugged in, make sure that the key is inserted into the console.

c. Check the power switch located on the treadmill frame near the power cord. If the switch protrudes as shown (A), the switch has tripped. To reset the power switch, wait for five minutes and then press the switch back in (B).

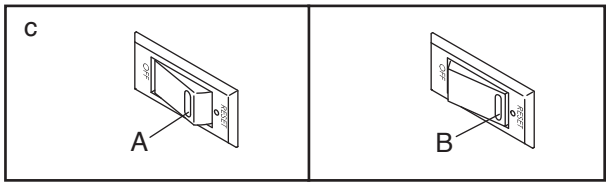

SYMPTOM: The power turns off during use

a. Check the power switch (see drawing c above). If the switch has tripped, wait for five minutes and then press the switch back in.

b. Make sure that the power cord is plugged in. If the power cord is plugged in, unplug it, wait for five minutes, and then plug it back in.

c. Remove the key from the console, and then reinsert it.

d. If the treadmill still will not run, please see TROUBLESHOOTING at the left for further assistance.

SYMPTOM: The incline of the treadmill does not change correctly

a. See step 7 on page 27 to calibrate the incline system.

SYMPTOM: The treadmill will not connect to the wireless network

a. Make sure that the wireless settings on the console are correct (see page 28).

b. Make sure that the settings for your wireless network are correct.

c. If you still have questions, go to my.iFIT.com.

SYMPTOM: The walking belt slows when walked on

a. Use only a surge suppressor that meets all of the specifications described on page 17.

b. If the walking belt is overtightened, treadmill performance may decrease and the walking belt may become damaged. Remove the key and **UNPLUG THE POWER CORD.** Using the hex key, turn both idler roller screws (C) counterclockwise, 1/4 of a turn. When the walking belt is properly tightened, you should be able to lift each edge of the walking belt 2 to 3 in. (5 to 7 cm) off the walking platform. **Be careful to keep the walking belt centered.** Then, plug in the power cord, insert the key, and walk on the treadmill for a few minutes. Repeat until the walking belt is properly tightened.

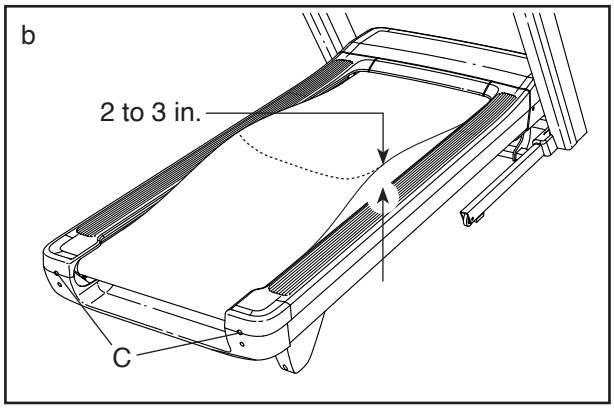

c. Your treadmill features a walking belt coated with high-performance lubricant. **IMPORTANT: Never apply silicone spray or other substances to the walking belt or the walking platform unless instructed to do so by an authorized service representative. Such substances may deteriorate the walking belt and cause excessive wear.** If you suspect that the walking belt needs more lubricant, please see TROUBLESHOOTING on page 31 for further assistance.

d. If the walking belt still slows when walked on, please see TROUBLESHOOTING on page 31 for further assistance.

SYMPTOM: The walking belt is off-center

a. First, remove the key and **UNPLUG THE POWER CORD. If the walking belt has shifted to the left,** use the hex key to turn the left idler roller screw clockwise 1/2 of a turn; **if the walking belt has shifted to the right,** turn the left idler roller screw counterclockwise 1/2 of a turn. **Be careful not to overtighten the walking belt.** Then, plug in the power cord, insert the key, and walk on the treadmill for a few minutes. Repeat until the walking belt is centered.

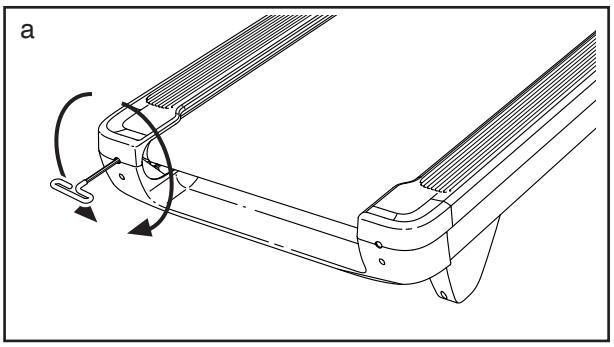

SYMPTOM: The walking belt slips when walked on

a. First, remove the key and **UNPLUG THE POWER CORD.** Using the hex key, turn both idler roller screws clockwise, 1/4 of a turn. When the walking belt is correctly tightened, you should be able to lift each edge of the walking belt 2 to 3 in. (5 to 7 cm) off the walking platform. **Be careful to keep the walking belt centered.** Then, plug in the power cord, insert the key, and walk on the treadmill for a few minutes. Repeat until the walking belt is properly tightened.

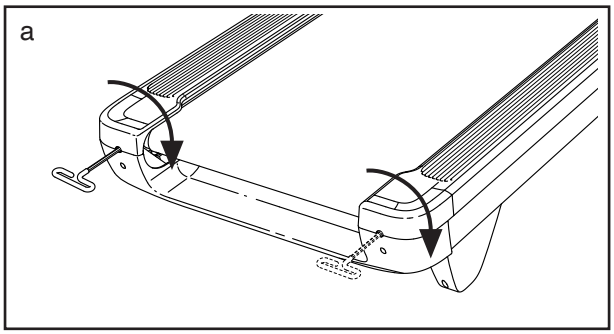

SYMPTOM: The displays of the console do not function properly

a. If the console does not boot up properly, or if the console freezes and does not respond, reset the console to the factory default settings. **IMPORTANT: Doing this will erase all of the custom settings that you have made to the console. Resetting the console requires two people.** First, press the power switch into the off position. Next, locate the indicated small opening (D) on the top of the console. Using a bent paper clip (E), press and hold the small button inside of the opening and have a second person press the power switch into the on/reset position. Continue to hold the button inside of the opening until the console turns on. When the reset operation is complete, the console will turn off and then turn back on. If it does not, use the power switch to turn the treadmill off and then on again. Once the console turns on, check for firmware updates (see step 6 on page 27). **Note: It may take up to a few minutes for the console to be ready for use.**

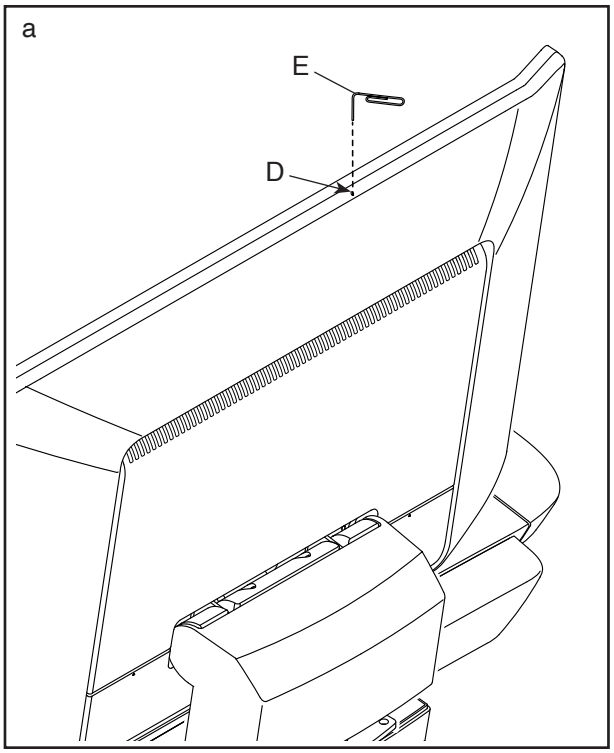

SYMPTOM: The console does not stay in place when it is tilted upward and downward

a. Using a standard screwdriver, carefully pry the upper console cover (F) and then the lower console cover (G) off the console (H). **Be careful to avoid damaging these parts.**

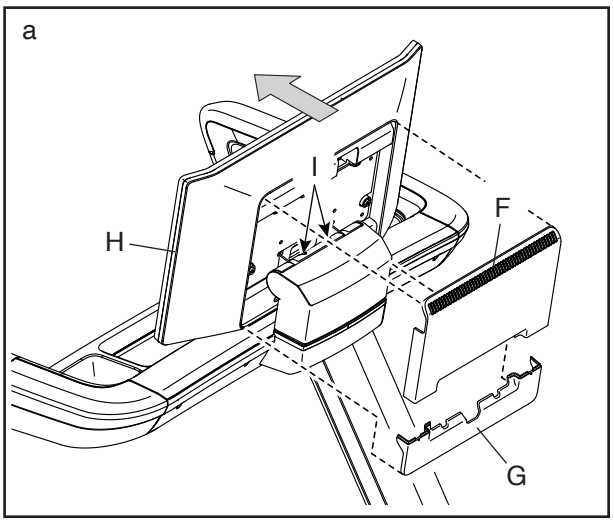

Next, tilt the top of the console (H) in the direction shown by the arrow, and use one of the included hex keys to tighten the two indicated M6 x 15mm screws (I) a small amount.

b. Tilt the console (H) to the position shown, and use the hex key to tighten the two indicated M6 x 15mm screws (I) a small amount, until the upward and downward movement of the console no longer feels loose. Then, see the upper drawing and reattach the lower console cover (G) and then the upper console cover (F).

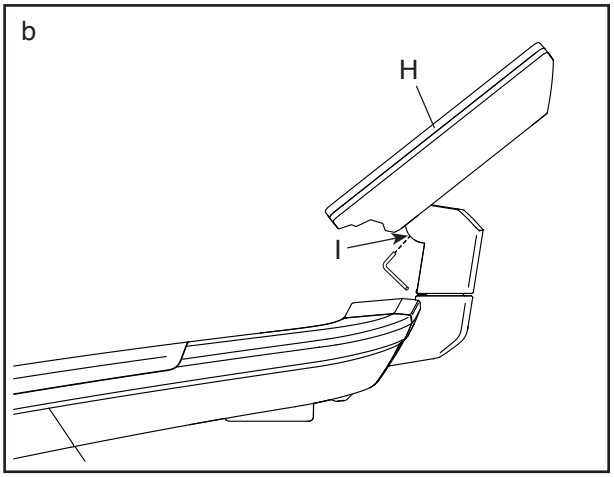

EXERCISE GUIDELINES

⚠ WARNING: Before beginning this or any exercise program, consult your physician. This is especially important for persons over age 35 or persons with pre-existing health problems.

These guidelines will help you to plan your exercise program. For detailed exercise information, obtain a reputable book or consult your physician. Remember, proper nutrition and adequate rest are essential for successful results.

EXERCISE INTENSITY

Whether your goal is to burn fat or to strengthen your cardiovascular system, exercising at the proper intensity is the key to achieving results. You can use your heart rate as a guide to find the proper intensity level. The chart below shows recommended heart rates for fat burning and aerobic exercise.

165	155	145	140	130	125	115	♥
145	138	130	125	118	110	103	♥
125	120	115	110	105	95	90	♥
20	30	40	50	60	70	80	

To find the proper intensity level, find your age at the bottom of the chart (ages are rounded off to the nearest ten years). The three numbers listed above your age define your "training zone." The lowest number is the heart rate for fat burning, the middle number is the heart rate for maximum fat burning, and the highest number is the heart rate for aerobic exercise.

Burning Fat—To burn fat effectively, you must exercise at a low intensity level for a sustained period of time. During the first few minutes of exercise, your body uses carbohydrate calories for energy. Only after the first few minutes of exercise does your body begin to use stored fat calories for energy. If your goal is to burn fat, adjust the intensity of your exercise until your heart rate is near the lowest number in your training zone. For maximum fat burning, exercise with your heart rate near the middle number in your training zone.

Aerobic Exercise—If your goal is to strengthen your cardiovascular system, you must perform aerobic exercise, which is activity that requires large amounts of oxygen for prolonged periods of time. For aerobic exercise, adjust the intensity of your exercise until your heart rate is near the highest number in your training zone.

HOW TO MEASURE YOUR HEART RATE

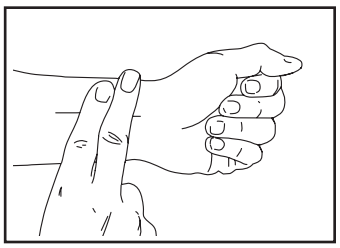

To measure your heart rate, exercise for at least four minutes. Then, stop exercising and place two fingers on your wrist as shown. Take a six-second heartbeat count, and multiply the result by 10 to find your heart rate. For example, if your six-second heartbeat count is 14, your heart rate is 140 beats per minute.

WORKOUT GUIDELINES

Warming Up—Start with 5 to 10 minutes of stretching and light exercise. A warm-up increases your body temperature, heart rate, and circulation in preparation for exercise.

Training Zone Exercise—Exercise for 20 to 30 minutes with your heart rate in your training zone. (During the first few weeks of your exercise program, do not keep your heart rate in your training zone for longer than 20 minutes.) Breathe regularly and deeply as you exercise; never hold your breath.

Cooling Down—Finish with 5 to 10 minutes of stretching. Stretching increases the flexibility of your muscles and helps to prevent post-exercise problems.

EXERCISE FREQUENCY

To maintain or improve your condition, complete three workouts each week, with at least one day of rest between workouts. After a few months of regular exercise, you may complete up to five workouts each week, if desired. Remember, the key to success is to make exercise a regular and enjoyable part of your everyday life.

SUGGESTED STRETCHES

The correct form for several basic stretches is shown at the right. Move slowly as you stretch; never bounce.

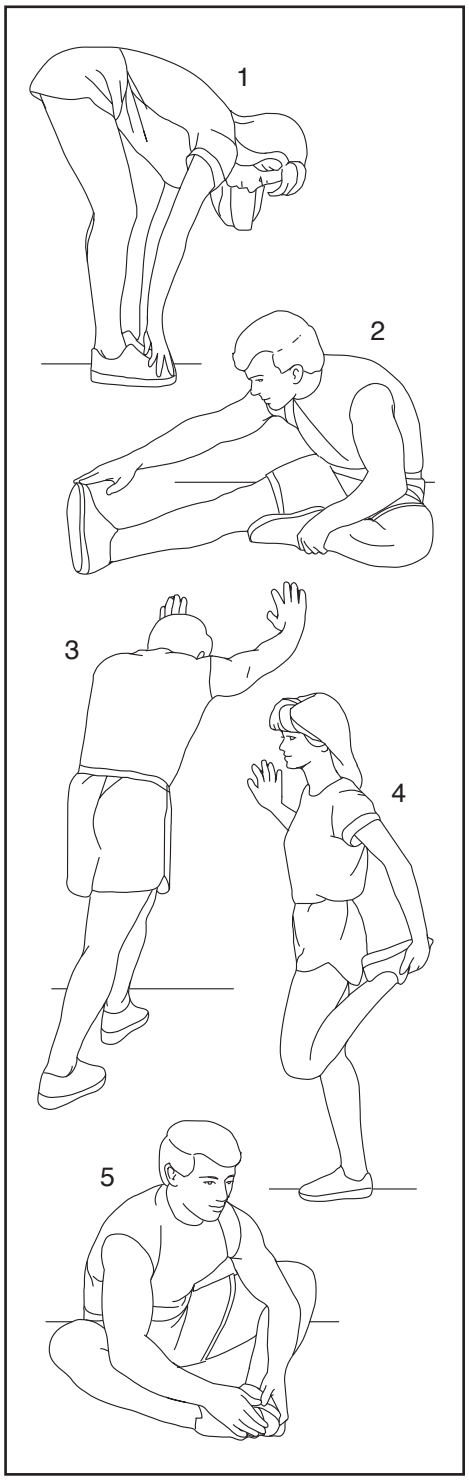

1. Toe Touch Stretch

Stand with your knees bent slightly and slowly bend forward from your hips. Allow your back and shoulders to relax as you reach down toward your toes as far as possible. Hold for 15 counts, then relax. Repeat 3 times. Stretches: Hamstrings, back of knees and back.

2. Hamstring Stretch

Sit with one leg extended. Bring the sole of the opposite foot toward you and rest it against the inner thigh of your extended leg. Reach toward your toes as far as possible. Hold for 15 counts, then relax. Repeat 3 times for each leg. Stretches: Hamstrings, lower back and groin.

3. Calf/Achilles Stretch

With one leg in front of the other, reach forward and place your hands against a wall. Keep your back leg straight and your back foot flat on the floor. Bend your front leg, lean forward and move your hips toward the wall. Hold for 15 counts, then relax. Repeat 3 times for each leg. To cause further stretching of the achilles tendons, bend your back leg as well. Stretches: Calves, achilles tendons and ankles.

4. Quadriceps Stretch

With one hand against a wall for balance, reach back and grasp one foot with your other hand. Bring your heel as close to your buttocks as possible. Hold for 15 counts, then relax. Repeat 3 times for each leg. Stretches: Quadriceps and hip muscles.

5. Inner Thigh Stretch

Sit with the soles of your feet together and your knees outward. Pull your feet toward your groin area as far as possible. Hold for 15 counts, then relax. Repeat 3 times. Stretches: Quadriceps and hip muscles.

NOTES

NOTES

PART LIST

Model No. NTL19124.10 R1223A

Key No.	Qty.	Description
1	8	3/8" x 3/4" Screw
2	–	(Not Used)
3	1	Ground Screw
4	2	M4 x 20mm Screw
5	2	5/16" Star Washer
6	4	5/16" x 1" Screw
7	63	#8 x 3/4" Screw
8	12	3/8" Star Washer
9	2	5/16" x 3/4" Screw
10	5	5/16" x 1 3/4" Bolt
11	1	5/16" x 2 1/4" Bolt
12	6	5/16" Nut
13	8	#8 x 3/4" Tek Screw
14	3	1/4" x 2 1/2" Screw
15	12	#8 x 1/2" Screw
16	4	M3 x 12mm Screw
17	1	3/8" x 1 1/2" Bolt
18	14	#8 x 5/8" Pan Head Screw
19	4	Plastic Standoff
20	1	3/8" x 1 3/4" Bolt
21	4	#8 Belt Guide Screw
22	6	M4 x 10mm Screw
23	4	M6 x 15mm Screw
24	6	M6 x 20mm Screw
25	2	5/16" Motor Screw
26	2	3/8" x 1 3/8" Bolt
27	12	#8 x 3/4" Truss Head Screw
28	4	1/4" x 1" Screw
29	2	3/8" x 1 1/8" Screw
30	4	5/16" Flat Washer
31	2	1/4" x 1 1/4" Screw
32	2	#8 Washer
33	16	#8 x 5/8" Flat Head Screw
34	1	Large Plastic Washer
35	1	Large Thrust Washer
36	2	1/2" Plastic Washer
37	4	3/8" Thrust Washer
38	4	3/8" Nut
39	5	1/4" Nut
40	4	3/8" x 3" Screw
41	1	M30 Nut
42	1	Right Rear Foot
43	4	3/8" Plastic Bushing
44	4	Platform Cushion
45	1	Left Frame Cover
46	1	Right Frame Cover
47	1	Warning Decal
48	1	Idler Roller
49	1	Walking Platform
50	1	Walking Belt
51	1	Left Foot Rail
52	1	Right Foot Rail
53	2	Belt Guide
54	4	Rubber Cushion
55	1	Drive Roller
56	2	9/32" Plastic Bushing
57	1	Incline Power Board
58	1	Power Board Bracket
59	1	Power Supply
60	1	Power Supply Bracket
61	3	Cable Tie
62	1	Latch Crossbar
63	1	Drive Motor
64	1	Motor Belt
65	1	Storage Latch
66	1	Frame
67	1	Left Rear Foot
68	1	Rear End Cap
69	1	Motor Hood
70	1	Incline Frame
71	1	Incline Motor
72	2	Frame Spacer
73	2	Incline Motor Spacer
74	1	Controller
75	–	(Not Used)
76	1	Controller Bracket
77	8	Fan Screw
78	1	Power Cord
79	1	Power Cord Grommet
80	–	(Not Used)
81	1	Grommet
82	1	Belly Pan
83	1	Left Handrail Cover
84	1	Right Handrail Cover
85	1	Left Handrail Outer Cover
86	1	Right Handrail Outer Cover
87	1	Left Inner Handrail Cover
88	1	Right Inner Handrail Cover
89	1	Tray
90	1	Handrail Frame
91	1	Handrail Wire
92	1	Upright Wire
93	1	Left Upright
94	1	Right Upright
95	1	Left Upright Cover
96	1	Right Upright Cover
97	1	Left Base Cover
98	1	Right Base Cover
99	16	Mushroom Fastener
100	4	Base Pad

Key No.	Qty.	Description	Key No.	Qty.	Description
101	1	Upright Base	118	1	Access Panel
102	2	Caution Decal	119	1	Console Base
103	2	Wheel	120	1	Primary Console
104	1	Upper Console Cover	121	1	Key/Clip
105	1	Lower Console Cover	122	8	Wire Tie
106	1	Console	123	2	Console Ground Wire
107	1	Console Back Plate	124	2	Left Handrail Cover Bracket
108	2	Saddle Bracket	125	2	Right Handrail Cover Bracket
109	1	Pivot Cover	126	5	Clip
110	1	Pivot Back Cover	127	2	1/2" Pin
111	1	Pivot Front Cover	128	1	Power Switch
112	2	Fan	129	12	Small Flat Washer
113	2	Metal Spacer	130	4	5/16" Bushing
114	1	Plastic Spacer	131	2	3/8" Plastic Washer
115	1	Left Pivot Cover	132	3	#8 x 5/8" Screw
116	1	Right Pivot Cover	133	2	3/8" Locknut
117	1	Console Pivot Bracket	*	–	User's Manual

Note: Specifications are subject to change without notice. For information about ordering replacement parts, see the back cover of this manual. *These parts are not illustrated.

EXPLODED DRAWING A

Model No. NTL17124.10 R1223A

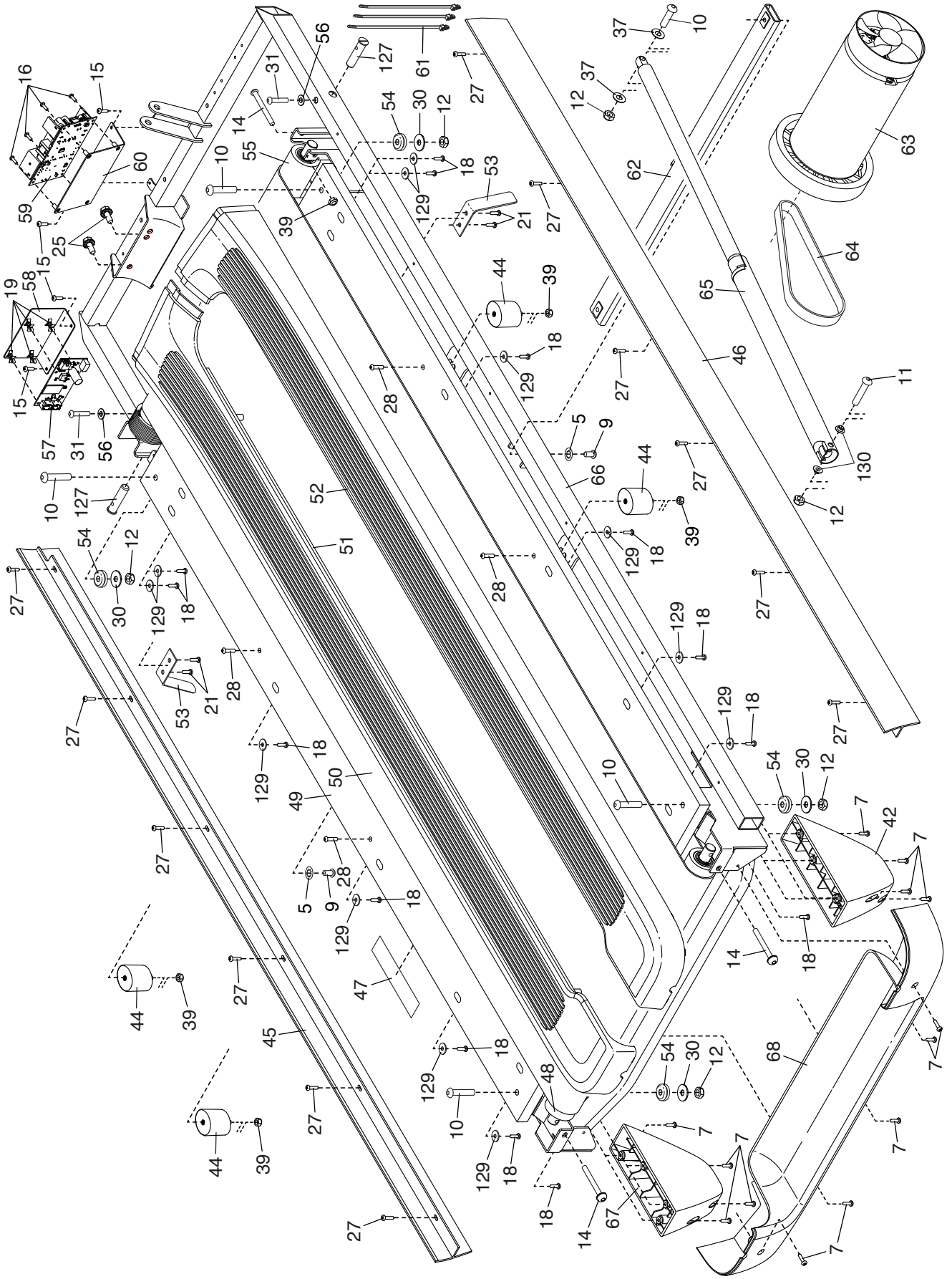

EXPLODED DRAWING B

Model No. NTL17124.10 R1223A

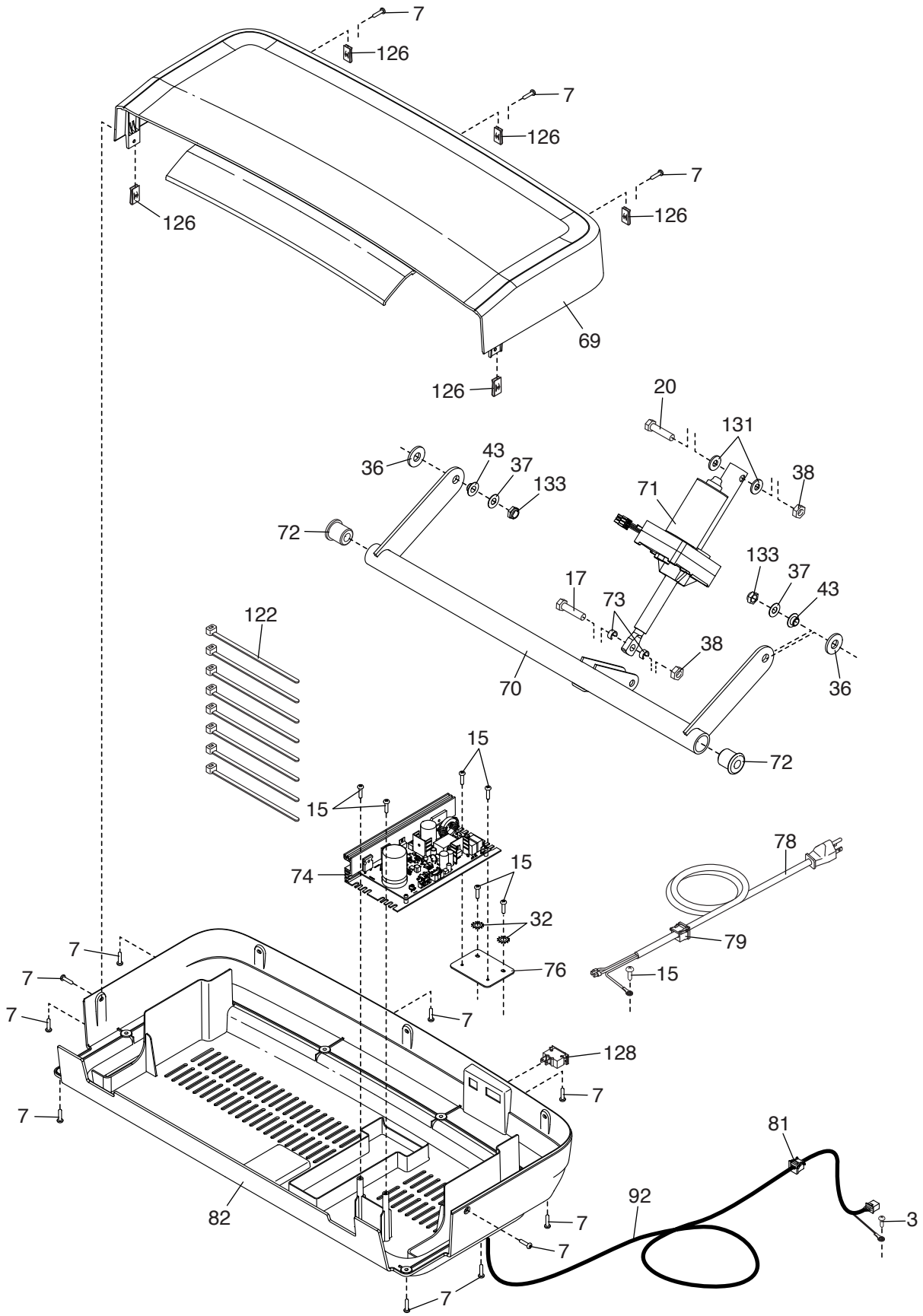

EXPLODED DRAWING C

Model No. NTL17124.10 R1223A

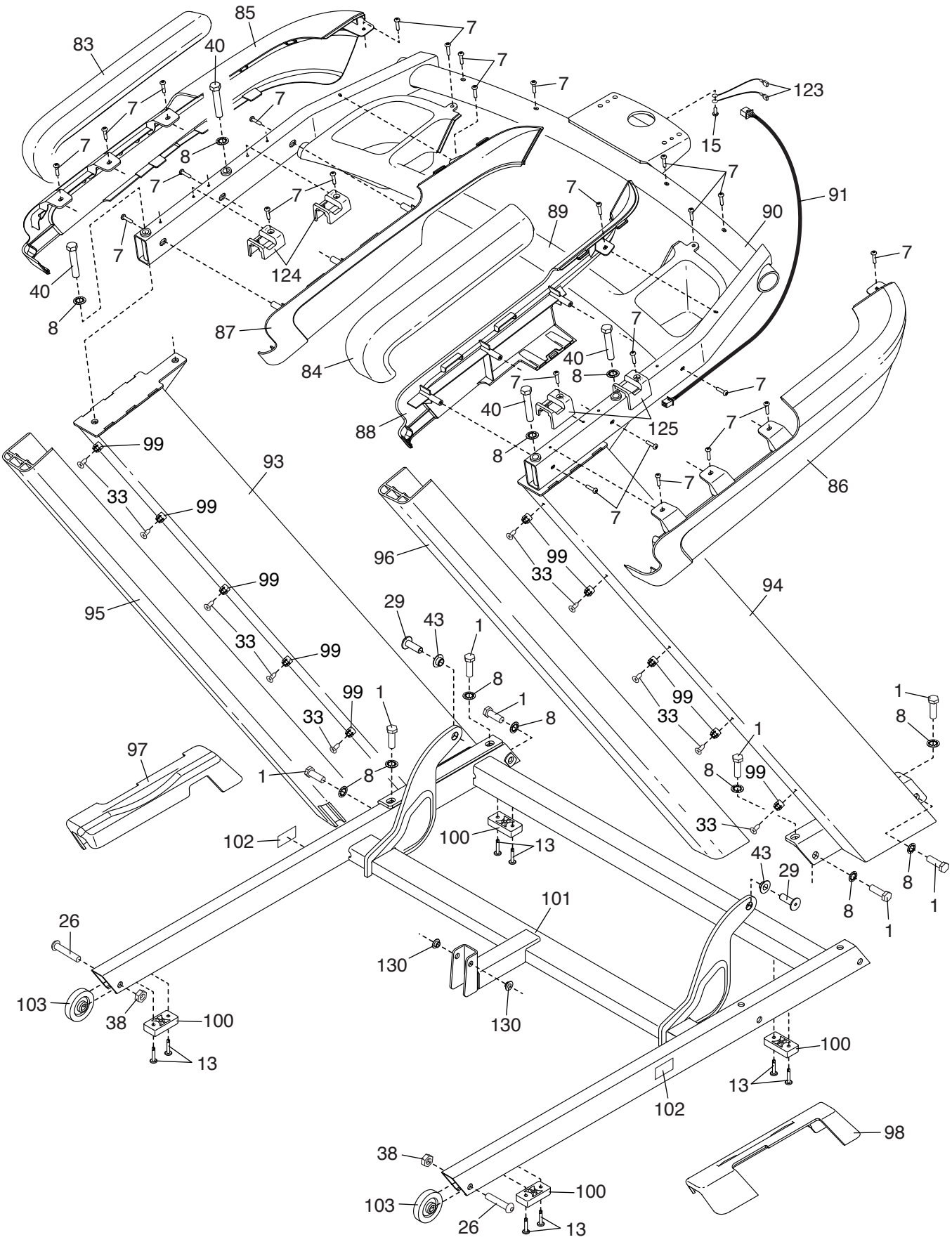

EXPLODED DRAWING D

Model No. NTL17124.10 R1223A

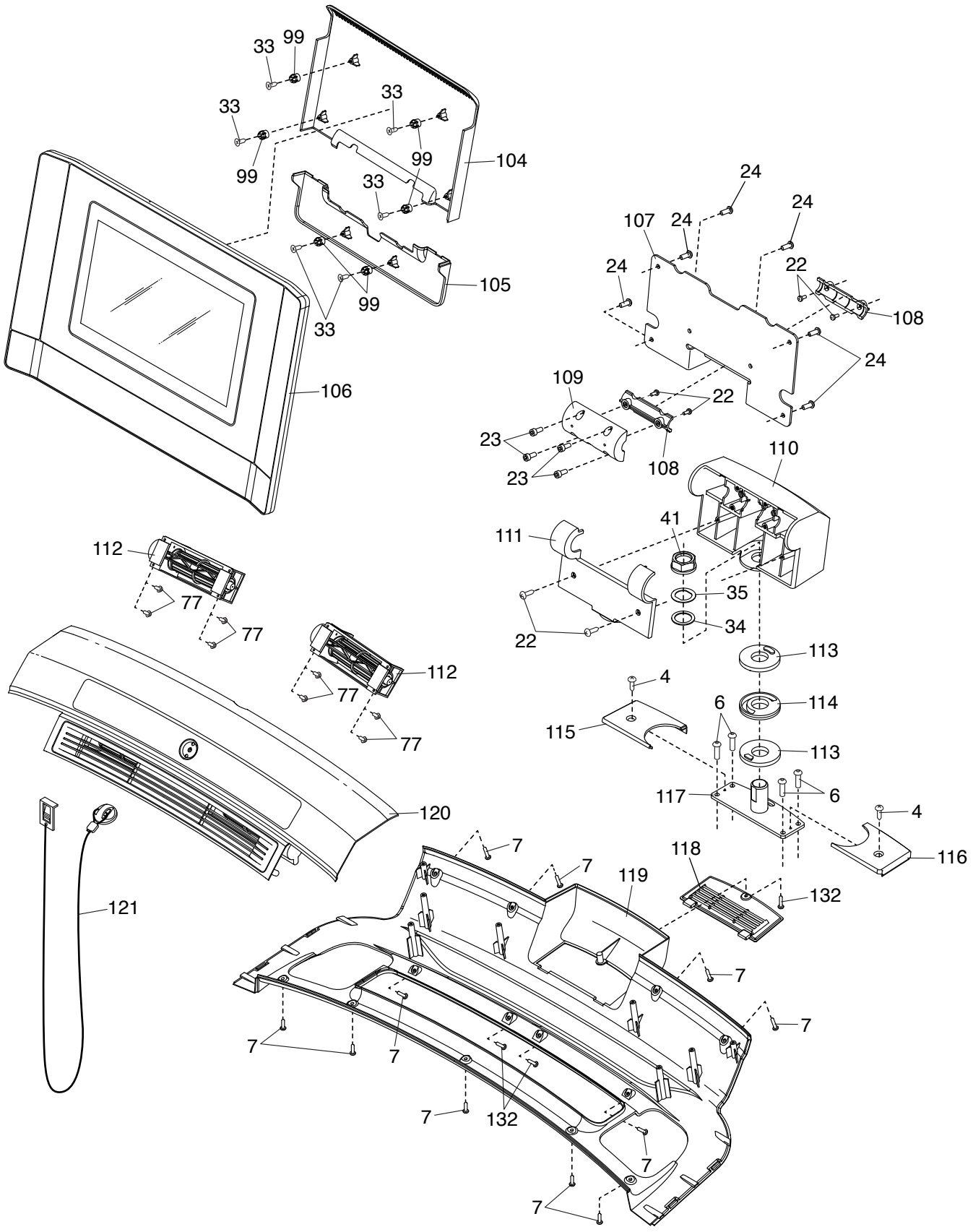

ORDERING REPLACEMENT PARTS

To order replacement parts, please see the front cover of this manual. To help us assist you, be prepared to provide the following information when contacting us:

- the model number and serial number of the product (see the front cover of this manual)
- the name of the product (see the front cover of this manual)
- the key number and description of the replacement part(s) (see the PART LIST and the EXPLODED DRAWING near the end of this manual)

LIMITED WARRANTY

IMPORTANT: To protect your fitness equipment with an extended service plan, see page 5.

iFIT Inc. (iFIT) warrants this product to be free from defects in workmanship and material, under normal use and service conditions. The frame is warranted for ten (10) years from the date that you receive this product. Parts are warranted for two (2) years from the date that you receive this product. Labor is warranted for one (1) year from the date that you receive this product.

This warranty extends only to the original purchaser (customer) and is not transferrable. iFIT's obligation under this warranty is limited to repairing or replacing, at iFIT's discretion, the product through one of its authorized service providers. All repairs for which warranty claims are made must be preauthorized by iFIT. If replacement parts are shipped while the product is under warranty, the customer will be responsible for a minimal handling charge. For in-home service, the customer may be responsible for a minimal trip charge. This warranty does not extend to freight damage to the product. This warranty will automatically be voided by the following conditions: (1) if the product is used as a store display model, (2) if the product is purchased or transported outside the USA, (3) if any instruction or warning in this manual is not followed, (4) if the product is abused or improperly or abnormally used, (5) if the product is modified to alter functionality or capability without the written permission of iFIT, or (6) if the product is used for commercial or rental purposes. No other warranty beyond that specifically set forth above is authorized by iFIT.

iFIT is not responsible or liable for the following damages: (1) indirect, special, or consequential damages arising out of or in connection with the use or performance of the product; (2) damages with respect to any economic loss, loss of property, loss of revenues or profits, loss of enjoyment or use, or costs of removal or installation; or (3) other consequential damages of any kind. Some states do not allow the exclusion or limitation of incidental or consequential damages. Accordingly, the above limitation may not apply to the customer.

The warranty extended hereunder is in lieu of any and all other warranties, and any implied warranties of merchantability or fitness for a particular purpose are limited in their scope and duration to the terms set forth herein. Some states do not allow limitations on how long an implied warranty lasts. Accordingly, the above limitation may not apply to the customer. This warranty provides specific legal rights; the customer may have other rights that vary from state to state.

For warranty service, please go to my.iFIT.com. Please be prepared to provide the model number and serial number of the product (see the front cover of this manual).

iFIT Inc., 1500 S. 1000 W., Logan, UT 84321-9813

Part No. 453033 R1223A

Printed in China © 2023 iFIT Inc.