DAIKIN

SiUS122410EA

R-32

Service Manual

Multi-Split Type Air Conditioners
MXM-A, MXT-A, MXTH-A Series







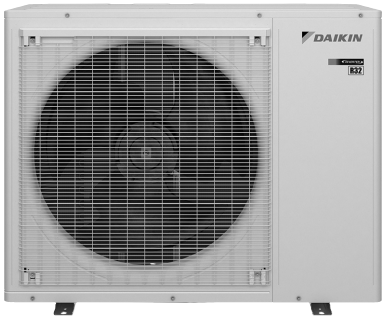

[Applied Models]
●Inverter Multi : Heat Pump

Introduction 1

1. Safety Cautions 2
   - 1.1 Warnings and Cautions Regarding Safety of Workers 2
   - 1.2 Warnings and Cautions Regarding Safety of Users 7
2. Icons Used 10
3. Revision History 11

Part 1 General Information 12

1. Applicable Models 13
2. Functions 14
   - 2.1 Indoor Unit 14
   - 2.2 Outdoor Unit 15

Part 2 Specifications 16

1. Specifications 17
   - 1.1 Indoor Unit 17
   - 1.2 Outdoor Unit 19

Part 3 Printed Circuit Board Connector Wiring Diagram 25

1. Indoor Unit 26
2. Outdoor Unit 28
   - 2.1 2/3/4MXM, 2MXT 28
   - 2.2 5MXM, 3/4/5MXT, 3/4/5MXTH 31

Part 4 Functions and Control 33

1. Main Functions 34
   - 1.1 Temperature Control 34
   - 1.2 Frequency Principle 34
   - 1.3 Airflow Direction Control 36
   - 1.4 COMFORT AIRFLOW Operation 37
   - 1.5 Fan Speed Control for Indoor Unit 38
   - 1.6 Program Dry Operation 39
   - 1.7 Automatic Cooling/Heating Change-over 40
   - 1.8 Thermostat Control 41
   - 1.9 NIGHT SET Mode 42
   - 1.10 ECONO Operation 42
   - 1.11 POWERFUL Operation 43
   - 1.12 Brightness Setting of Indoor Unit Display 44
   - 1.13 Wireless LAN Connection 45
   - 1.14 Other Functions 49
2. Control Specification 50
   - 2.1 Thermistor Functions 50
   - 2.2 Mode Hierarchy 52
   - 2.3 Compressor Speed Control 53
   - 2.4 Controls at Mode Changing/Start-up 55
   - 2.5 Discharge Pipe Temperature Control 57
   - 2.6 Input Current Control 58
   - 2.7 Freeze-up Protection Control 59

2.8 Heating Peak-cut Control 60
2.9 High Pressure Protection Control 61
2.10 Outdoor Fan Control 62
2.11 Liquid Compression Protection Function 62
2.12 Defrost Control 62
2.13 Low Compressor Speed High Pressure Limit 69
2.14 Electronic Expansion Valve Control 70
2.15 Malfunctions 75

Part 5 Remote Controller 76

1. Applicable Remote Controller 77
2. ARC480A83 78
3. BRC073A6 80
4. BRC944B2 84

Part 6 Service Diagnosis 85

1. General Problem Symptoms and Check Items 87
2. Troubleshooting with LED 88
   2.1 Indoor Unit 88
   2.2 Outdoor Unit 89
3. Service Diagnosis 90
   3.1 ARC480 Series 90
   3.2 BRC073A6 93
4. Code Indication on Remote Controller 95
   4.1 Indoor Unit 95
   4.2 Outdoor Unit 96
5. Troubleshooting for Indoor Unit 97
   5.1 Indoor Unit PCB Abnormality 97
   5.2 Freeze-up Protection Control/Heating Peak-cut Control 98
   5.3 Indoor Fan Motor (DC Motor) or Related Abnormality 99
   5.4 Indoor Heat Exchanger Thermistor or Related Abnormality 101
   5.5 Room Temperature Sensor Abnormality/Humidity Sensor Abnormality 102
   5.6 Signal Transmission Error (Between Indoor Unit and Outdoor Unit) 103
   5.7 Unspecified Voltage (Between Indoor Unit and Outdoor Unit) 105
6. Troubleshooting for Outdoor Unit 106
   6.1 Refrigerant Shortage 106
   6.2 Low-voltage Detection or Over-voltage Detection 109
   6.3 Wiring Error Check Unexecuted 111
   6.4 Unspecified Voltage (Between Indoor Unit and Outdoor Unit), Anti-icing Control in Other Rooms 112
   6.5 Anti-icing Control for Indoor Unit 113
   6.6 Outdoor Unit PCB Abnormality 115
   6.7 Actuation of High Pressure Switch 116
   6.8 OL Activation (Compressor Overload) 117
   6.9 Compressor Lock 119
   6.10 DC Fan Lock 121
   6.11 Input Overcurrent Detection 122
   6.12 Electronic Expansion Valve Coil Abnormality 124
   6.13 Four Way Valve Abnormality 125

6.14 Discharge Pipe Temperature Control 127
6.15 High Pressure Control in Cooling 128
6.16 System Shutdown due to Temperature Abnormality in the Compressor 130
6.17 Compressor Sensor System Abnormality 131
6.18 High Pressure Switch System Abnormality 133
6.19 Position Sensor Abnormality 134
6.20 Thermistor or Related Abnormality (Outdoor Unit) 136
6.21 High Pressure Sensor Abnormality 138
6.22 Electrical Box Temperature Rise 139
6.23 Radiation Fin Temperature Rise 141
6.24 Output Overcurrent Detection 143
7. Check 146
7.1 Thermistor Resistance Check 146
7.2 Indoor Fan Motor Connector Check 147
7.3 Power Supply Waveform Check 147
7.4 Electronic Expansion Valve Check 148
7.5 Four Way Valve Performance Check 149
7.6 Inverter Unit Refrigerant System Check 149
7.7 Inverter Analyzer Check 150
7.8 Outdoor Fan Motor Check 151
7.9 Installation Condition Check 152
7.10 Discharge Pressure Check 152
7.11 Outdoor Fan System Check 153
7.12 Main Circuit Short Check 153
7.13 Capacitor Voltage Check 155
7.14 Power Module Check 156
7.15 High Pressure Sensor Check 158

Part 7 Trial Operation and Field Settings 159

1. Pump Down Operation 160
2. Forced Cooling Operation 161
3. Wiring Error Check Function 162
4. Trial Operation 164
5. Field Settings 166
5.1 Indoor Unit 166
5.2 Outdoor Unit 172
6. Silicone Grease on Power Transistor/Diode Bridge 175

Part 8 Appendix 176

1. Piping Diagrams 177
1.1 Indoor Unit 177
1.2 Outdoor Unit 178
2. Wiring Diagrams 182
2.1 Indoor Unit 182
2.2 Outdoor Unit 184
3. Operation Limit 194

Introduction

1. Safety Cautions 2
   1.1 Warnings and Cautions Regarding Safety of Workers 2
   1.2 Warnings and Cautions Regarding Safety of Users 7
2. Icons Used 10
3. Revision History 11

1. Safety Cautions

Be sure to read the following safety cautions before conducting repair work.
After the repair work is complete, be sure to conduct a test operation to ensure that the equipment operates normally, and explain the cautions for operating the product to the customer.

	This manual is for the person in charge of maintenance and inspection.	 Refrigerant Safety Group A2L	This appliance is filled with R-32.

Caution Items

The caution items are classified into ⚠**Warning** and ⚠**Caution**. The ⚠**Warning** items are especially important since death or serious injury can result if they are not followed closely. The ⚠**Caution** items can also lead to serious accidents under some conditions if they are not followed. Therefore, be sure to observe all the safety caution items described below.

Pictograms

△ This symbol indicates an item for which caution must be exercised.
The pictogram shows the item to which attention must be paid.
◯ This symbol indicates a prohibited action.
The prohibited item or action is shown in the illustration or near the symbol.
● This symbol indicates an action that must be taken, or an instruction.
The instruction is shown in the illustration or near the symbol.

1.1 Warnings and Cautions Regarding Safety of Workers

⚠ Warning	
Do not store equipment in a room with fire sources (e.g., naked flames, gas appliances, electric heaters).	
Be sure to disconnect the power cable from the socket before disassembling equipment for repair. Working on equipment that is connected to the power supply may cause an electrical shock. If it is necessary to supply power to the equipment to conduct the repair or inspect the circuits, do not touch any electrically charged sections of the equipment.	
If refrigerant gas is discharged during repair work, do not touch the discharged refrigerant gas. Refrigerant gas may cause frostbite.	
When disconnecting the suction or discharge pipe of the compressor at the welded section, evacuate the refrigerant gas completely at a well-ventilated place first. If there is gas remaining inside the compressor, the refrigerant gas or refrigerating machine oil discharges when the pipe is disconnected, and it may cause injury.	
If refrigerant gas leaks during repair work, ventilate the area. Refrigerant gas may generate toxic gases when it contacts flames.	
Be sure to discharge the capacitor completely before conducting repair work. The step-up capacitor supplies high-voltage electricity to the electrical components of the outdoor unit. A charged capacitor may cause an electrical shock.	

Warning	
Do not turn the air conditioner on or off by plugging in or unplugging the power cable. Plugging in or unplugging the power cable to operate the equipment may cause an electrical shock or fire.	
Be sure to wear a safety helmet, gloves, and a safety belt when working in a high place (more than 2 m (6.5 ft)). Insufficient safety measures may cause a fall.	
In case of R-32 / R-410A refrigerant models, be sure to use pipes, flare nuts and tools intended for the exclusive use with the R-32 / R-410A refrigerant. The use of materials for R-22 refrigerant models may cause a serious accident, such as a damage of refrigerant cycle or equipment failure.	
Do not mix air or gas other than the specified refrigerant (R-32 / R-410A / R-22) in the refrigerant system. If air enters the refrigerant system, an excessively high pressure results, causing equipment damage and injury.	

Caution	
Do not repair electrical components with wet hands. Working on the equipment with wet hands may cause an electrical shock.	
Do not clean the air conditioner with water. Washing the unit with water may cause an electrical shock.	
Be sure to provide an earth / grounding when repairing the equipment in a humid or wet place, to avoid electrical shocks.	
Be sure to turn off the power switch and unplug the power cable when cleaning the equipment. The internal fan rotates at a high speed, and may cause injury.	
Be sure to conduct repair work with appropriate tools. The use of inappropriate tools may cause injury.	
Be sure to check that the refrigerating cycle section has cooled down enough before conducting repair work. Working on the unit when the refrigerating cycle section is hot may cause burns.	
Conduct welding work in a well-ventilated place. Using the welder in an enclosed room may cause oxygen deficiency.	

■ **Checks to the area**
Prior to beginning work on systems containing flammable refrigerants, safety checks are necessary to ensure that the risk of ignition is minimized. For repair to the refrigerating system, provisions under **Work procedure** to **No ignition sources** below shall be completed prior to conducting work on the system.

■ **Work procedure**
Work shall be undertaken under a controlled procedure so as to minimize the risk of a flammable gas or vapor being present while the work is being performed.

■ **General work area**
All maintenance staff and others working in the local area shall be instructed on the nature of work being carried out. Work in confined spaces shall be avoided.

■ **Checking for presence of refrigerant**
The area shall be checked with an appropriate refrigerant detector prior to and during work, to ensure the technician is aware of potentially toxic or flammable atmospheres.
Ensure that the leak detection equipment being used is suitable for use with all applicable refrigerants, i.e. non-sparking, adequately sealed or intrinsically safe.

■ **Presence of fire extinguisher**
If any hot work is to be conducted on the refrigerating equipment or any associated parts, appropriate fire extinguishing equipment shall be available to hand. Have a dry powder or CO_2 fire extinguisher adjacent to the charging area.

■ **No ignition sources**
No person carrying out work in relation to a refrigerating system which involves exposing any pipe work shall use any sources of ignition in such a manner that it may lead to the risk of fire or explosion. All possible ignition sources, including cigarette smoking, should be kept sufficiently far away from the site of installation, repairing, removing and disposal, during which refrigerant can possibly be released to the surrounding space. Prior to work taking place, the area around the equipment is to be surveyed to make sure that there are no flammable hazards or ignition risks. “No Smoking” signs shall be displayed.

■ **Ventilated area**
Ensure that the area is in the open or that it is adequately ventilated before breaking into the system or conducting any hot work. A degree of ventilation shall continue during the period that the work is carried out. The ventilation should safely disperse any released refrigerant and preferably expel it externally into the atmosphere.

■ **Checks to the refrigerating equipment**
Where electrical components are being changed, they shall be fit for the purpose and to the correct specification.
At all times the manufacturer’s maintenance and service guidelines shall be followed. If in doubt, consult the manufacturer’s technical department for assistance.
The following checks shall be applied to installations using flammable refrigerants:
- The actual refrigerant charge is in accordance with the room size within which the refrigerant containing parts are installed;
- The ventilation machinery and outlets are operating adequately and are not obstructed;
- If an indirect refrigerating circuit is being used, the secondary circuit shall be checked for the presence of refrigerant;
- Marking to the equipment continues to be visible and legible. Markings and signs that are illegible shall be corrected;
- Refrigerating pipe or components are installed in a position where they are unlikely to be exposed to any substance which may corrode refrigerant containing components, unless the components are constructed of materials which are inherently resistant to being corroded or are suitably protected against being so corroded.

■ **Checks to electrical devices**

Repair and maintenance to electrical components shall include initial safety checks and component inspection procedures. If a fault exists that could compromise safety, then no electrical supply shall be connected to the circuit until it is satisfactorily dealt with. If the fault cannot be corrected immediately but it is necessary to continue operation, an adequate temporary solution shall be used. This shall be reported to the owner of the equipment so all parties are advised.

Initial safety checks shall include:

- that capacitors are discharged: this shall be done in a safe manner to avoid possibility of sparking;
- that no live electrical components and wiring are exposed while charging, recovering or purging the system;
- that there is continuity of earth bonding.

■ **Repairs to sealed components**

Sealed electrical components shall be replaced.

■ **Repair to intrinsically safe components**

Intrinsically safe components must be replaced.

■ **Cabling**

Check that cabling will not be subject to wear, corrosion, excessive pressure, vibration, sharp edges or any other adverse environmental effects. The check shall also take into account the effects of aging or continual vibration from sources such as compressors or fans.

■ **Detection of flammable refrigerants**

Under no circumstances shall potential sources of ignition be used in the searching for or detection of refrigerant leaks. A halide torch (or any other detector using a naked flame) shall not be used.

The following leak detection methods are deemed acceptable for all refrigerant systems. Electronic leak detectors may be used to detect refrigerant leaks but, in the case of flammable refrigerants, the sensitivity may not be adequate, or may need re-calibration. Ensure that the detector is not a potential source of ignition and is suitable for the refrigerant used. Leak detection equipment shall be set at a percentage of the LFL (lower flammability limit) of the refrigerant and shall be calibrated to the refrigerant employed, and the appropriate percentage of gas (25% maximum) is confirmed.

Leak detection fluids are also suitable for use with most refrigerants but the use of detergents containing chlorine shall be avoided as the chlorine may react with the refrigerant and corrode the copper pipe-work.

Note: Examples of leak detection fluids are

- bubble method,
- fluorescent method agents.

If a leak is suspected, all naked flames shall be removed/extinguished.

If a leakage of refrigerant is found which requires brazing, all of the refrigerant shall be recovered from the system, or isolated (by means of shut off valves) in a part of the system remote from the leak. Removal of refrigerant shall be according to the following clause, **Removal and evacuation**.

■ **Removal and evacuation**

When breaking into the refrigerant circuit to make repairs – or for any other purpose – conventional procedures shall be used. However, for flammable refrigerants it is important that best practice be followed, since flammability is a consideration. The following procedure shall be adhered to:

- safely remove refrigerant following local and national regulations;
- evacuate;
- purge the circuit with inert gas (optional for A2L);
- evacuate (optional for A2L);

- continuously flush or purge with inert gas when using flame to open circuit;
- open the circuit.

The refrigerant charge shall be recovered into the correct recovery cylinders if venting is not allowed by local and national codes. For appliances containing flammable refrigerants, the system shall be purged with oxygen-free nitrogen to render the appliance safe for flammable refrigerants. This process might need to be repeated several times. Compressed air or oxygen shall not be used for purging refrigerant systems.
For appliances containing flammable refrigerants, refrigerants purging shall be achieved by breaking the vacuum in the system with oxygen-free nitrogen and continuing to fill until the working pressure is achieved, then venting to atmosphere, and finally pulling down to a vacuum (optional for A2L). This process shall be repeated until no refrigerant is within the system (optional for A2L). When the final oxygen-free nitrogen charge is used, the system shall be vented down to atmospheric pressure to enable work to take place.
The outlet for the vacuum pump shall not be close to any potential ignition sources, and ventilation shall be available.

■ **Charging procedures**

In addition to conventional charging procedures, the following requirements shall be followed.
Ensure that contamination of different refrigerants does not occur when using charging equipment. Hoses or lines shall be as short as possible to minimize the amount of refrigerant contained in them.

- Cylinders shall be kept in an appropriate position according to the instructions.
- Ensure that the refrigerating system is earthed prior to charging the system with refrigerant.
- Label the system when charging is complete (if not already).
- Extreme care shall be taken not to overfill the refrigerating system.
- Prior to recharging the system, it shall be pressure-tested with the appropriate purging gas.

The system shall be leak-tested on completion of charging but prior to commissioning.
A follow up leak test shall be carried out prior to leaving the site.

■ **Decommissioning**

Before carrying out this procedure, it is essential that the technician is completely familiar with the equipment and all its detail. It is recommended good practice that all refrigerants are recovered safely. Prior to the task being carried out, an oil and refrigerant sample shall be taken in case analysis is required prior to re-use of recovered refrigerant. It is essential that electrical power is available before the task is commenced.
a) Become familiar with the equipment and its operation.
b) Isolate system electrically.
c) Before attempting the procedure, ensure that:
  - mechanical handling equipment is available, if required, for handling refrigerant cylinders;
  - all personal protective equipment is available and being used correctly;
  - the recovery process is supervised at all times by a competent person;
  - recovery equipment and cylinders conform to the appropriate standards.

d) Pump down refrigerant system, if possible.
e) If a vacuum is not possible, make a manifold so that refrigerant can be removed from various parts of the system.
f) Make sure that cylinder is situated on the scales before recovery takes place.
g) Start the recovery machine and operate in accordance with instructions.
h) Do not overfill cylinders (no more than 80% volume liquid charge).
i) Do not exceed the maximum working pressure of the cylinder, even temporarily.
j) When the cylinders have been filled correctly and the process completed, make sure that the cylinders and the equipment are removed from site promptly and all isolation valves on the equipment are closed off.
k) Recovered refrigerant shall not be charged into another refrigerating system unless it has been cleaned and checked.

- **Labelling**
  Equipment shall be labelled stating that it has been de-commissioned and emptied of refrigerant. The label shall be dated and signed. For appliances containing flammable refrigerants, ensure that there are labels on the equipment stating the equipment contains flammable refrigerant.

- **Recovery**
  When removing refrigerant from a system, either for servicing or decommissioning, it is recommended good practice that all refrigerants are removed safely.
  When transferring refrigerant into cylinders, ensure that only appropriate refrigerant recovery cylinders are employed. Ensure that the correct number of cylinders for holding the total system charge is available. All cylinders to be used are designated for the recovered refrigerant and labelled for that refrigerant (i.e. special cylinders for the recovery of refrigerant). Cylinders shall be complete with pressure-relief valve and associated shut-off valves in good working order. Empty recovery cylinders are evacuated and, if possible, cooled before recovery occurs.
  The recovery equipment shall be in good working order with a set of instructions concerning the equipment that is at hand and shall be suitable for the recovery of the flammable refrigerant. If in doubt, the manufacturer should be consulted. In addition, a set of calibrated weighing scales shall be available and in good working order. Hoses shall be complete with leak-free disconnect couplings and in good condition.
  The recovered refrigerant shall be processed according to local legislation in the correct recovery cylinder, and the relevant waste transfer note arranged. Do not mix refrigerants in recovery units and especially not in cylinders.
  If compressors or compressor oils are to be removed, ensure that they have been evacuated to an acceptable level to make certain that flammable refrigerant does not remain within the lubricant. The compressor body shall not be heated by an open flame or other ignition sources to accelerate this process. When oil is drained from a system, it shall be carried out safely.

1.2 Warnings and Cautions Regarding Safety of Users

⚠ Warning	
Do not store the equipment in a room with fire sources (e.g., naked flames, gas appliances, electric heaters).	
Be sure to use parts listed in the service parts list of the applicable model and appropriate tools to conduct repair work. Never attempt to modify the equipment. The use of inappropriate parts or tools may cause an electrical shock, excessive heat generation or fire.	
If the power cable and lead wires are scratched or have deteriorated, be sure to replace them. Damaged cable and wires may cause an electrical shock, excessive heat generation or fire.	
Do not use a joined power cable or extension cable, or share the same power outlet with other electrical appliances, since it may cause an electrical shock, excessive heat generation or fire.	
Be sure to use an exclusive power circuit for the equipment, and follow the local technical standards related to the electrical equipment, the internal wiring regulations, and the instruction manual for installation when conducting electrical work. Insufficient power circuit capacity and improper electrical work may cause an electrical shock or fire.	

Warning	
Be sure to use the specified cable for wiring between the indoor and outdoor units. Make the connections securely and route the cable properly so that there is no force pulling the cable at the connection terminals. Improper connections may cause excessive heat generation or fire.	
When wiring between the indoor and outdoor units, make sure that the terminal cover does not lift off or dismount because of the cable. If the cover is not mounted properly, the terminal connection section may cause an electrical shock, excessive heat generation or fire.	
Do not damage or modify the power cable. Damaged or modified power cables may cause an electrical shock or fire. Placing heavy items on the power cable, or heating or pulling the power cable may damage it.	
Do not mix air or gas other than the specified refrigerant (R-32 / R-410A / R- 22) in the refrigerant system. If air enters the refrigerant system, an excessively high pressure results, causing equipment damage and injury.	
If the refrigerant gas leaks, be sure to locate the leaking point and repair it before charging the refrigerant. After charging the refrigerant, make sure that there is no leak. If the leaking point cannot be located and the repair work must be stopped, be sure to pump-down, and close the service valve, to prevent refrigerant gas from leaking into the room. Refrigerant gas itself is harmless, but it may generate toxic gases when it contacts flames, such as those from fan type and other heaters, stoves and ranges.	
When relocating the equipment, make sure that the new installation site has sufficient strength to withstand the weight of the equipment. If the installation site does not have sufficient strength or the installation work is not conducted securely, the equipment may fall and cause injury.	
Check to make sure that the power cable plug is not dirty or loose, then insert the plug into a power outlet securely. If the plug is dusty or has a loose connection, it may cause an electrical shock or fire.	
When replacing the coin battery in the remote controller, be sure to dispose of the old battery to prevent children from swallowing it. If a child swallows the coin battery, see a doctor immediately.	

Caution	
Installation of a leakage breaker is necessary in some cases depending on the conditions of the installation site, to prevent electrical shocks.	
Do not install the equipment in a place where there is a possibility of combustible gas leaks. If combustible gas leaks and remains around the unit, it may cause a fire.	
Check to see if parts and wires are mounted and connected properly, and if connections at the soldered or crimped terminals are secure. Improper installation and connections may cause excessive heat generation, fire or an electrical shock.	

Caution	
If the installation platform or frame has corroded, replace it. A corroded installation platform or frame may cause the unit to fall, resulting in injury.	
Check the earth / grounding, and repair it if the equipment is not properly earthed / grounded. Improper earth / grounding may cause an electrical shock.	
Be sure to measure insulation resistance after the repair, and make sure that the resistance is 1 MΩ or higher. Faulty insulation may cause an electrical shock.	
Be sure to check the drainage of the indoor unit after the repair. Faulty drainage may cause water to enter the room and wet the furniture and floor.	
Do not tilt the unit when removing it. The water inside the unit may spill and wet the furniture and floor.	

2. Icons Used

The following icons are used to attract the attention of the reader to specific information.

Icon	Type of Information	Description
 Warning	Warning	**Warning** is used when there is danger of personal injury.
 Caution	Caution	**Caution** is used when there is danger that the reader, through incorrect manipulation, may damage equipment, lose data, get an unexpected result or have to restart (part of) a procedure.
 Note	Note	**Note** provides information that is not indispensable, but may nevertheless be valuable to the reader, such as tips and tricks.
 Reference	Reference	**Reference** guides the reader to other places in this binder or in this manual, where he/she will find additional information on a specific topic.

3. Revision History

Month/Year	Version	Revised contents
09 / 2024	SiUS122410E	First edition
10 / 2025	SiUS122410EA	Model addition: 5MXM48AVJU9, 3MXT24AVJU9, 4MXT36AVJU9, 5MXT40AVJU9, 3MXTH24AVJU9, 4MXTH36AVJU9, 5MXTH40AVJU9

Part 1
General Information

1. Applicable Models 13
2. Functions 14
   2.1 Indoor Unit 14
   2.2 Outdoor Unit 15

1. Applicable Models

Indoor Unit

CTXV07AVJU9
FTXV09AVJU9
FTXV12AVJU9
FTXV15AVJU9
FTXV18AVJU9
FTXV24AVJU9

Outdoor Unit

Standard type	Cold climate type	
2MXM18AVJU9	**2MXT18AVJU9**	**2MXTH18AVJU9 (with drain pan heater)**
3MXM24AVJU9	**3MXT24AVJU9**	**3MXTH24AVJU9 (with drain pan heater)**
4MXM36AVJU9	**4MXT36AVJU9**	**4MXTH36AVJU9 (with drain pan heater)**
5MXM48AVJU9	**5MXT40AVJU9**	**5MXTH40AVJU9 (with drain pan heater)**

2. Functions

2.1 Indoor Unit

Category	Functions	CTXV07AVJU9 FTXV09/12AVJU9	FTXV15/18/24AVJU9
Basic Function	Inverter (with inverter power control)	●	●
Comfortable Airflow	Power-airflow flap (horizontal blade)	●	—
	Power-airflow dual flaps (horizontal blade)	—	●
	Wide-angle louvers (vertical blades)	●	●
	Auto-swing (up and down)	●	●
	Auto-swing (left and right)	—	—
	3-D airflow	—	—
	COMFORT AIRFLOW operation	●	●
Comfort Control	Auto fan speed	●	●
	Switchable fan speed	●	●
	Indoor unit quiet operation	●	●
	INTELLIGENT EYE operation	—	—
	2-area INTELLIGENT EYE operation	—	—
	Hot-start function	●	●
Operation	Automatic cooling/heating change-over	●	●
	Program dry operation	●	●
	Fan only	●	●
Lifestyle Convenience	POWERFUL operation (inverter)	●	●
	ECONO operation	●	●
	Indoor unit **ON/OFF** switch	●	●
	Multi-colored indicator lamp	—	—
	Monitor brightness setting	—	—
	Signal receiving sign	●	●
	R/C with back light	●	●
Health and Cleanliness	Titanium apatite deodorizing filter	●	●
	Mold proof air filter	●	●
	Wipe-clean flat panel	●	●
	Washable grille	—	—
Timer	WEEKLY TIMER operation	—	—
	24-hour ON/OFF TIMER	—	—
	Count up-down ON/OFF timer	●	●
	NIGHT SET mode	●	●
Worry Free (Reliability & Durability)	Auto-restart (after power failure)	●	●
	Self-diagnosis (R/C, LED)	●	●
Flexibility	Multi-split/split type compatible indoor unit	●	●
	Either side drain (left or right)	●	●
	°F/°C changeover R/C temperature display (factory setting: °F)	●	●
Remote Control	Remote control adaptor (normal open pulse contact)	Option	Option
	Remote control adaptor (normal open contact)	Option	Option
	DIII-NET compatible (adaptor)	Option	Option
	Wireless LAN connection	●	●
Remote Controller	Wireless	●	●
	Wired	Option	Option

● : Available
— : Not available

2.2 Outdoor Unit

Function	Standard		Cold Climate			
	2MXM	3/4/5MXM	2MXT	3/4/5MXT	2MXTH	3/4/5MXTH
Inverter (with inverter power control)	●	●	●	●	●	●
Operation limit	Refer to P. 194					
PAM control	●	●	●	●	●	●
Standby electricity saving	—	—	—	—	—	—
Swing compressor	●	●	●	●	●	●
Reluctance DC motor	●	●	●	●	●	●
NIGHT QUIET mode	●	●	●	●	●	●
QUIET OUTDOOR UNIT operation	●	●	●	●	●	●
Quick warming function	—	—	—	—	—	—
Automatic defrosting	●	●	●	●	●	●
Defrost learning control	—	—	—	—	—	—
Priority room setting	●	●	●	●	●	●
COOL/HEAT mode lock	●	●	●	●	●	●
Self-diagnosis (R/C, LED)	●	●	●	●	●	●
Wiring error check function	●	●	●	●	●	●
Anti-corrosion treatment of outdoor heat exchanger	●	●	●	●	●	●
Drain pan heater	Option	Option	Option	Option	●	●
Drain pan heater control by microcomputer	●	●	●	●	●	●
Chargeless	98.4 ft (30 m)	131.2 ft (40 m)	98.4 ft (30 m)	131.2 ft (40 m)	98.4 ft (30 m)	131.2 ft (40 m)
Low temp. cooling operation (−15°C) (5°F)	—	—	—	—	—	—

● : Available
— : Not available

Part 2
Specifications

1. Specifications 17
1.1 Indoor Unit 17
1.2 Outdoor Unit 19

1. Specifications

1.1 Indoor Unit

Model			CTXV07AVJU9		FTXV09AVJU9	
			Cooling	Heating	Cooling	Heating
Power Supply		Phase	1 ϕ		1 ϕ	
		Hz, V	60 Hz, 208 - 230 V		60 Hz, 208 - 230 V	
Rated Capacity			7 kBtu/h Class		9 kBtu/h Class	
Front Panel Color (Munsell No.)			White (N9.5)		White (N9.5)	
Airflow Rates	H	cfm (m³/min)	332 (9.4)	332 (9.4)	381 (10.8)	385 (10.9)
	M		268 (7.6)	279 (7.9)	272 (7.7)	304 (8.6)
	L		230 (6.5)	230 (6.5)	230 (6.5)	230 (6.5)
	SL		166 (4.7)	194 (5.5)	166 (4.7)	194 (5.5)
Fan	Type		Cross Flow Fan		Cross Flow Fan	
	Drive Input	A	0.20		0.20	
	Speed	Steps	5 Steps, Quiet, Auto		5 Steps, Quiet, Auto	
Air Direction Control			Right, Left, Horizontal, Downward		Right, Left, Horizontal, Downward	
Air Filter			Removable, Washable		Removable, Washable	
Running Current (Rated)		A	0.11 - 0.10	0.12 - 0.11	0.14 - 0.13	0.13 - 0.12
Power Consumption (Rated)		W	20 - 20	23 - 23	26 - 26	25 - 25
Power Factor (Rated)		%	87.0 - 90.3	94.0 - 91.3	90.4 - 86.2	90.9 - 87.3
Temperature Control			Microcomputer Control		Microcomputer Control	
Dimensions (H × W × D)		in. (mm)	11-1/4 × 30-5/16 × 8-3/4 (286 × 770 × 223)		11-1/4 × 30-5/16 × 8-3/4 (286 × 770 × 223)	
Packaged Dimensions (H × W × D)		in. (mm)	12-5/18 × 32-11/16 × 14-3/16 (320 × 830 × 360)		12-5/8 × 32-11/16 × 14-3/16 (320 × 830 × 360)	
Weight (Mass)		lbs (kg)	19 (9)		19 (9)	
Gross Weight (Gross Mass)		lbs (kg)	24 (11)		24 (11)	
Sound Pressure Level	H / M / L / SL	dB(A)	40 / 35 / 31 / 24	39 / 34 / 28 / 25	43 / 35 / 31 / 24	41 / 35 / 28 / 25
Heat Insulation			Both Liquid and Gas Pipes		Both Liquid and Gas Pipes	
Piping Connection	Liquid	in. (mm)	ϕ 1/4 (ϕ 6.4)		ϕ 1/4 (ϕ 6.4)	
	Gas	in. (mm)	ϕ 3/8 (ϕ 9.5)		ϕ 3/8 (ϕ 9.5)	
	Drain	in. (mm)	ϕ 5/8 (ϕ 16)		ϕ 5/8 (ϕ 16)	
Drawing No.			3D153215A		3D153215A	
Note			SL: The quiet fan level of the airflow rate setting.		SL: The quiet fan level of the airflow rate setting.	

Model			FTXV12AVJU9		FTXV15AVJU9	
			Cooling	Heating	Cooling	Heating
Power Supply		Phase	1 ϕ		1 ϕ	
		Hz, V	60 Hz, 208 - 230 V		60 Hz, 208 - 230 V	
Rated Capacity			12 kBtu/h Class		15 kBtu/h Class	
Front Panel Color (Munsell No.)			White (N9.5)		White (N9.5)	
Airflow Rates	H	cfm (m³/min)	392 (11.1)	438 (12.4)	540 (15.3)	636 (18.0)
	M		293 (8.3)	318 (9.0)	470 (13.3)	537 (15.2)
	L		226 (6.4)	240 (6.8)	381 (10.8)	452 (12.8)
	SL		166 (4.7)	205 (5.8)	339 (9.6)	388 (11.0)
Fan	Type		Cross Flow Fan		Cross Flow Fan	
	Drive Input	A	0.23		0.31	
	Speed	Steps	5 Steps, Quiet, Auto		5 Steps, Quiet, Auto	
Air Direction Control			Right, Left, Horizontal, Downward		Right, Left, Horizontal, Downward	
Air Filter			Removable, Washable		Removable, Washable	
Running Current (Rated)		A	0.17 - 0.15	0.20 - 0.18	0.19 - 0.17	0.20 - 0.18
Power Consumption (Rated)		W	29 - 29	35 - 35	36 - 36	39 - 39
Power Factor (Rated)		%	81.3 - 84.7	83.7 - 82.7	91.1 - 93.5	93.8 - 92.3
Temperature Control			Microcomputer Control		Microcomputer Control	
Dimensions (H × W × D)		in. (mm)	11-1/4 × 30-5/16 × 8-3/4 (286 × 770 × 223)		11-5/8 × 39 × 10-3/8 (295 × 990 × 263)	
Packaged Dimensions (H × W × D)		in. (mm)	12-5/8 × 32-11/16 × 14-3/16 (320 × 830 × 360)		15-3/16 × 43-3/8 × 15-5/16 (386 × 1,102 × 389)	
Weight (Mass)		lbs (kg)	19 (9)		27 (13)	
Gross Weight (Gross Mass)		lbs (kg)	24 (11)		37 (17)	
Sound Pressure Level	H / M / L / SL	dB(A)	45 / 37 / 31 / 24	45 / 37 / 30 / 26	45 / 41 / 36 / 33	45 / 41 / 37 / 33
Heat Insulation			Both Liquid and Gas Pipes		Both Liquid and Gas Pipes	
Piping Connection	Liquid	in. (mm)	ϕ 1/4 (ϕ 6.4)		ϕ 1/4 (ϕ 6.4)	
	Gas	in. (mm)	ϕ 3/8 (ϕ 9.5)		ϕ 1/2 (ϕ 12.7)	
	Drain	in. (mm)	ϕ 5/8 (ϕ 16)		ϕ 5/8 (ϕ 16)	
Drawing No.			3D153215A		3D153178A	
Note			SL: The quiet fan level of the airflow rate setting.		SL: The quiet fan level of the airflow rate setting.	

Conversion Formulae
kcal/h = kW × 860 Btu/h = kW × 3412 cfm = m³/min × 35.3

Model			FTXV18AVJU9		FTXV24AVJU9	
			Cooling	Heating	Cooling	Heating
Power Supply		Phase	1 ϕ		1 ϕ	
		Hz, V	60 Hz, 208 - 230 V		60 Hz, 208 - 230 V	
Rated Capacity			18 kBtu/h Class		24 kBtu/h Class	
Front Panel Color (Munsell No.)			White (N9.5)		White (N9.5)	
Airflow Rates	H	cfm (m^3/min)	565 (16.0)	717 (20.3)	629 (17.8)	717 (20.3)
	M		463 (13.1)	572 (16.2)	501 (14.2)	572 (16.2)
	L		378 (10.7)	452 (12.8)	378 (10.7)	466 (13.2)
	SL		335 (9.5)	388 (11.0)	335 (9.5)	413 (11.7)
Fan	Type		Cross Flow Fan		Cross Flow Fan	
	Drive Input	A	0.40		0.45	
	Speed	Steps	5 Steps, Quiet, Auto		5 Steps, Quiet, Auto	
Air Direction Control			Right, Left, Horizontal, Downward		Right, Left, Horizontal, Downward	
Air Filter			Removable, Washable		Removable, Washable	
Running Current (Rated)		A	0.20 - 0.18	0.29 - 0.26	0.31 - 0.28	0.30 - 0.27
Power Consumption (Rated)		W	39 - 39	54 - 54	57 - 57	55 - 55
Power Factor (Rated)		%	93.8 - 92.5	89.5 - 89.3	88.4 - 88.7	88.1 - 89.3
Temperature Control			Microcomputer Control		Microcomputer Control	
Dimensions (H × W × D)		in. (mm)	11-5/8 × 39 × 10-3/8 (295 × 990 × 263)		11-5/8 × 39 × 10-3/8 (295 × 990 × 263)	
Packaged Dimensions (H × W × D)		in. (mm)	15-3/16 × 43-3/8 × 15-5/16 (386 × 1,102 × 389)		15-3/16 × 43-3/8 × 15-5/16 (386 × 1,102 × 389)	
Weight (Mass)		lbs (kg)	27 (13)		27 (13)	
Gross Weight (Gross Mass)		lbs (kg)	37 (17)		37 (17)	
Sound Pressure Level	H / M / L / SL	dB(A)	48 / 43 / 38 / 33	49 / 42 / 37 / 33	52 / 45 / 39 / 34	49 / 43 / 38 / 34
Heat Insulation			Both Liquid and Gas Pipes		Both Liquid and Gas Pipes	
Piping Connection	Liquid	in. (mm)	ϕ 1/4 (ϕ 6.4)		ϕ 1/4 (ϕ 6.4)	
	Gas	in. (mm)	ϕ 1/2 (ϕ 12.7)		ϕ 5/8 (ϕ 15.9)	
	Drain	in. (mm)	ϕ 5/8 (ϕ 16)		ϕ 5/8 (ϕ 16)	
Drawing No.			3D153178A		3D153178A	
Note			SL: The quiet fan level of the airflow rate setting.		SL: The quiet fan level of the airflow rate setting.	

Conversion Formulae
kcal/h = kW × 860 Btu/h = kW × 3412 cfm = m^3/min × 35.3

1.2 Outdoor Unit

1.2.1 Standard Type

Model			2MXM18AVJU9		3MXM24AVJU9	
			Cooling	Heating	Cooling	Heating
Power Supply		Phase	1 ϕ		1 ϕ	
		Hz, V	60 Hz, 208 - 230 V		60 Hz, 208 - 230 V	
COP@5°F		W/W	—	1.8	—	1.8
EER2		Btu/W·h	12.0	—	12.0	—
SEER2			21.0	—	21.0	—
HSPF2			—	10.0	—	10.0
Casing Color			Ivory White		Ivory White	
Compressor	Type		Hermetically Sealed Swing Type		Hermetically Sealed Swing Type	
	Model		2Y147BKBX1A		2Y260BPAX1A	
	Motor Output	W	1,300		2,400	
Refrigerant Oil	Model		FW68DA		FW68DA	
	Charge	fl oz (L)	22.0 (0.65)		30.4 (0.9)	
Refrigerant	Type		R-32		R-32	
	Charge	lbs (kg)	3.3 (1.50)		4.9 (2.2)	
Airflow Rates		cfm	2,112	2,140	2,055	2,140
		m³/min	59.8	60.6	58.2	60.6
Fan	Type		Propeller		Propeller	
	Motor Output	W	150		150	
	Running Current	A	0.31	0.33	0.29	0.33
	Power Consumption	W	65.4	67.7	61.0	67.7
Starting Current		A	14.0		17.0	
Dimensions (H × W × D)		in. (mm)	29-1/2 × 34-1/4 × 12-5/8 (750 × 870 × 320)		29-1/2 × 34-1/4 × 12-5/8 (750 × 870 × 320)	
Packaged Dimensions (H × W × D)		in. (mm)	32-1/16 × 40-5/16 × 16 (814 × 1,024 × 406)		32-1/16 × 40-5/16 × 16 (814 × 1,024 × 406)	
Weight (Mass)		lbs (kg)	127 (58)		140 (64)	
Gross Weight (Gross Mass)		lbs (kg)	135 (61)		148 (67)	
Sound Pressure Level		dB(A)	52	54	52	54
Piping Connection	Liquid	in. (mm)	ϕ 1/4 × 2 (ϕ 6.4 × 2)		ϕ 1/4 × 3 (ϕ 6.4 × 3)	
	Gas	in. (mm)	ϕ 3/8 × 1, ϕ 1/2 × 1 (ϕ 9.5 × 1, ϕ 12.7 × 1)		ϕ 3/8 × 1, ϕ 1/2 × 2 (ϕ 9.5 × 1, ϕ 12.7 × 2)	
	Drain	in. (mm)	I.D. ϕ 5/8 (ϕ 15.9)		I.D. ϕ 5/8 (ϕ 15.9)	
Heat Insulation			Both Liquid and Gas Pipes		Both Liquid and Gas Pipes	
No. of Wiring Connections			3 for Power Supply, 4 for Interunit Wiring (Including Ground Wiring)		3 for Power Supply, 4 for Interunit Wiring (Including Ground Wiring)	
Max. Interunit Piping Length		ft (m)	164 (50) (for Total of Each Room)		230 (70) (for Total of Each Room)	
		ft (m)	82 (25) (for One Room)		82 (25) (for One Room)	
Amount of Additional Charge		oz/ft (g/m)	0.22 (20) (98-3/8 ft (30 m) or more)		0.22 (20) (131-1/4 ft (40 m) or more)	
Max. Installation Height Difference		ft (m)	49-1/4 (15) (Between Indoor Unit and Outdoor Unit)		49-1/4 (15) (Between Indoor Unit and Outdoor Unit)	
		ft (m)	24-5/8 (7.5) (Between Indoor Units)		24-5/8 (7.5) (Between Indoor Units)	
Conditions based on			Indoor ; 80°FDB (26.7°CDB) / 67°FWB (19.4°CWB) Outdoor ; 95°FDB (35°CDB) / 75°FWB (24°CWB)	Indoor ; 70°FDB (21°CDB) / 60°FWB (15.6°CWB) Outdoor ; 47°FDB (8.3°CDB) / 43°FWB (6°CWB)	Indoor ; 80°FDB (26.7°CDB) / 67°FWB (19.4°CWB) Outdoor ; 95°FDB (35°CDB) / 75°FWB (24°CWB)	Indoor ; 70°FDB (21°CDB) / 60°FWB (15.6°CWB) Outdoor ; 47°FDB (8.3°CDB) / 43°FWB (6°CWB)
			Piping length: 25 ft (7.5 m)		Piping length: 25 ft (7.5 m)	
Drawing No.			C: 3D151521A		C: 3D152057A	

Conversion Formulae
kcal/h = kW × 860 Btu/h = kW × 3412 cfm = m³/min × 35.3

Model			4MXM36AVJU9		5MXM48AVJU9	
			Cooling	Heating	Cooling	Heating
Power Supply		Phase	1 ϕ		1 ϕ	
		Hz, V	60 Hz, 208 - 230 V		60 Hz, 208 - 230 V	
COP@5°F		W/W	—	1.8	—	1.9
EER2		Btu/W·h	10.0	—	10.0	—
SEER2			21.0	—	20.0	—
HSPF2			—	9.5	—	9.5
Casing Color			Ivory White		Ivory White	
Compressor	Type		Hermetically Sealed Swing Type		Hermetically Sealed Swing Type	
	Model		2Y260BPAX1A		2Y350BPCX2A	
	Motor Output	W	2,400		3,300	
Refrigerant Oil	Model		FW68DA		FW68DE	
	Charge	fl oz (L)	30.4 (0.9)		51.4 (1.52)	
Refrigerant	Type		R-32		R-32	
	Charge	lbs (kg)	4.9 (2.2)		6.94 (3.15)	
Airflow Rates		cfm	2,402	2,518	3,137	3,137
		m³/min	68.0	71.3	88.7	88.7
Fan	Type		Propeller		Propeller	
	Motor Output	W	150		192	
	Running Current	A	0.44	0.49	0.48	0.48
	Power Consumption	W	90.9	102.7	99.5	99.5
Starting Current		A	18.5		27.0	
Dimensions (H × W × D)		in. (mm)	29-1/2 × 34-1/4 × 12-5/8 (750 × 870 × 320)		34-1/4 × 43-5/16 × 18-1/8 (870 × 1,100 × 460)	
Packaged Dimensions (H × W × D)		in. (mm)	32-1/16 × 40-5/16 × 16 (814 × 1,024 × 406)		39-15/16 × 46-7/8 × 21-15/16 (1,014 × 1,190 × 558)	
Weight (Mass)		lbs (kg)	142 (65)		219 (100)	
Gross Weight (Gross Mass)		lbs (kg)	150 (68)		238 (108)	
Sound Pressure Level		dB(A)	56	60	55	57
Piping Connection	Liquid	in. (mm)	ϕ 1/4 × 4 (ϕ 6.4 × 4)		ϕ 1/4 × 5 (ϕ 6.4 × 5)	
	Gas	in. (mm)	ϕ 3/8 × 1, ϕ 1/2 × 2, ϕ 5/8 × 1 (ϕ 9.5 × 1, ϕ 12.7 × 2, ϕ 15.9 × 1)		ϕ 3/8 × 1, ϕ 1/2 × 2, ϕ 5/8 × 2 (ϕ 9.5 × 1, ϕ 12.7 × 2, ϕ 15.9 × 2)	
	Drain	in. (mm)	I.D. ϕ 5/8 (ϕ 15.9)		I.D. ϕ 1 (ϕ 25)	
Heat Insulation			Both Liquid and Gas Pipes		Both Liquid and Gas Pipes	
No. of Wiring Connections			3 for Power Supply, 4 for Interunit Wiring (Including Ground Wiring)		3 for Power Supply, 4 for Interunit Wiring (Including Ground Wiring)	
Max. Interunit Piping Length		ft (m)	230 (70) (for Total of Each Room)		262 (80) (for Total of Each Room)	
		ft (m)	82 (25) (for One Room)		98 (30) (for One Room)	
Amount of Additional Charge		oz/ft (g/m)	0.22 (20) (131-1/4 ft (40 m) or more)		0.22 (20) (131-1/4 ft (40 m) or more)	
Max. Installation Height Difference		ft (m)	49-1/4 (15) (Between Indoor Unit and Outdoor Unit)		49-1/4 (15) (Between Indoor Unit and Outdoor Unit)	
		ft (m)	24-5/8 (7.5) (Between Indoor Units)		24-5/8 (7.5) (Between Indoor Units)	
Conditions based on			Indoor ; 80°FDB (26.7°CDB) / 67°FWB (19.4°CWB) Outdoor ; 95°FDB (35°CDB) / 75°FWB (24°CWB)	Indoor ; 70°FDB (21°CDB) / 60°FWB (15.6°CWB) Outdoor ; 47°FDB (8.3°CDB) / 43°FWB (6°CWB)	Indoor ; 80°FDB (26.7°CDB) / 67°FWB (19.4°CWB) Outdoor ; 95°FDB (35°CDB) / 75°FWB (24°CWB)	Indoor ; 70°FDB (21°CDB) / 60°FWB (15.6°CWB) Outdoor ; 47°FDB (8.3°CDB) / 43°FWB (6°CWB)
			Piping length: 25 ft (7.5 m)		Piping length: 25 ft (7.5 m)	
Drawing No.			C: 3D151522A		C: 3D158480	

Conversion Formulae
kcal/h = kW × 860 Btu/h = kW × 3412 cfm = m³/min × 35.3

1.2.2 Cold Climate Type

Model			2MXT18AVJU9		2MXTH18AVJU9	
			Cooling	Heating	Cooling	Heating
Power Supply		Phase	1 ϕ		1 ϕ	
		Hz, V	60 Hz, 208 - 230 V		60 Hz, 208 - 230 V	
COP@5°F		W/W	—	1.8	—	1.8
EER2		Btu/W·h	12.0	—	12.0	—
SEER2			21.0	—	21.0	—
HSPF2			—	10.0	—	10.0
Casing Color			Ivory White		Ivory White	
Compressor	Type		Hermetically Sealed Swing Type		Hermetically Sealed Swing Type	
	Model		2Y260BPAX1A		2Y260BPAX1A	
	Motor Output	W	2,400		2,400	
Refrigerant Oil	Model		FW68DA		FW68DA	
	Charge	fl oz (L)	30.4 (0.9)		30.4 (0.9)	
Refrigerant	Type		R-32		R-32	
	Charge	lbs (kg)	4.9 (2.2)		4.9 (2.2)	
Airflow Rates		cfm	2,112	2,140	2,112	2,140
		m³/min	59.8	60.6	59.8	60.6
Fan	Type		Propeller		Propeller	
	Motor Output	W	150		150	
	Running Current	A	0.31	0.33	0.31	0.33
	Power Consumption	W	65.4	67.7	65.4	67.7
Starting Current		A	17.0		17.0	
Dimensions (H × W × D)		in. (mm)	29-1/2 × 34-1/4 × 12-5/8 (750 × 870 × 320)		29-1/2 × 34-1/4 × 12-5/8 (750 × 870 × 320)	
Packaged Dimensions (H × W × D)		in. (mm)	32-1/16 × 40-5/16 × 16 (814 × 1,024 × 406)		32-1/16 × 40-5/16 × 16 (814 × 1,024 × 406)	
Weight (Mass)		lbs (kg)	139 (63)		140 (64)	
Gross Weight (Gross Mass)		lbs (kg)	147 (67)		148 (67)	
Sound Pressure Level		dB(A)	52	54	52	54
Piping Connection	Liquid	in. (mm)	ϕ 1/4 × 2 (ϕ 6.4 × 2)		ϕ 1/4 × 2 (ϕ 6.4 × 2)	
	Gas	in. (mm)	ϕ 3/8 × 1, ϕ 1/2 × 1 (ϕ 9.5 × 1, ϕ 12.7 × 1)		ϕ 3/8 × 1, ϕ 1/2 × 1 (ϕ 9.5 × 1, ϕ 12.7 × 1)	
	Drain	in. (mm)	I.D. ϕ 5/8 (ϕ 15.9)		I.D. ϕ 5/8 (ϕ 15.9)	
Heat Insulation			Both Liquid and Gas Pipes		Both Liquid and Gas Pipes	
No. of Wiring Connections			3 for Power Supply, 4 for Interunit Wiring (Including Ground Wiring)		3 for Power Supply, 4 for Interunit Wiring (Including Ground Wiring)	
Max. Interunit Piping Length		ft (m)	164 (50) (for Total of Each Room)		164 (50) (for Total of Each Room)	
		ft (m)	82 (25) (for One Room)		82 (25) (for One Room)	
Amount of Additional Charge		oz/ft (g/m)	0.22 (20) (98-3/8 ft (30m) or more)		0.22 (20) (98-3/8 ft (30m) or more)	
Max. Installation Height Difference		ft (m)	49-1/4 (15) (Between Indoor Unit and Outdoor Unit)		49-1/4 (15) (Between Indoor Unit and Outdoor Unit)	
		ft (m)	24-5/8 (7.5) (Between Indoor Units)		24-5/8 (7.5) (Between Indoor Units)	
Conditions based on			Indoor ; 80°FDB (26.7°CDB) / 67°FWB (19.4°CWB) Outdoor ; 95°FDB (35°CDB) / 75°FWB (24°CWB)	Indoor ; 70°FDB (21°CDB) / 60°FWB (15.6°CWB) Outdoor ; 47°FDB (8.3°CDB) / 43°FWB (6°CWB)	Indoor ; 80°FDB (26.7°CDB) / 67°FWB (19.4°CWB) Outdoor ; 95°FDB (35°CDB) / 75°FWB (24°CWB)	Indoor ; 70°FDB (21°CDB) / 60°FWB (15.6°CWB) Outdoor ; 47°FDB (8.3°CDB) / 43°FWB (6°CWB)
			Piping length: 25 ft (7.5 m)		Piping length: 25 ft (7.5 m)	
Drawing No.			C: 3D152058A		C: 3D151523A	

Conversion Formulae
kcal/h = kW × 860 Btu/h = kW × 3412 cfm = m³/min × 35.3

Model			3MXT24AVJU9		3MXTH24AVJU9	
			Cooling	Heating	Cooling	Heating
Power Supply		Phase	1 ϕ		1 ϕ	
		Hz, V	60 Hz, 208 - 230 V		60 Hz, 208 - 230 V	
COP@5°F		W/W	—	1.9	—	1.8
EER2		Btu/W·h	12.5	—	12.5	—
SEER2			19.0	—	19.0	—
HSPF2			—	9.5	—	9.5
Casing Color			Ivory White		Ivory White	
Compressor	Type		Hermetically Sealed Swing Type		Hermetically Sealed Swing Type	
	Model		2Y350BPCX2A		2Y350BPCX2A	
	Motor Output	W	3,300		3,300	
Refrigerant Oil	Model		FW68DE		FW68DE	
	Charge	fl oz (L)	51.4 (1.52)		51.4 (1.52)	
Refrigerant	Type		R-32		R-32	
	Charge	lbs (kg)	6.94 (3.15)		6.94 (3.15)	
Airflow Rates		cfm	3,137	3,137	3,137	3,137
		m³/min	88.7	88.7	88.7	88.7
Fan	Type		Propeller		Propeller	
	Motor Output	W	192		192	
	Running Current	A	0.48	0.48	0.48	0.48
	Power Consumption	W	99.5	99.5	99.5	99.5
Starting Current		A	25.0		25.0	
Dimensions (H × W × D)		in. (mm)	34-1/4 × 43-5/16 × 18-1/8 (870 × 1,100 × 460)		34-1/4 × 43-5/16 × 18-1/8 (870 × 1,100 × 460)	
Packaged Dimensions (H × W × D)		in. (mm)	39-15/16 × 46-7/8 × 21-15/16 (1,014 × 1,190 × 558)		39-15/16 × 46-7/8 × 21-15/16 (1,014 × 1,190 × 558)	
Weight (Mass)		lbs (kg)	213 (97)		215 (97)	
Gross Weight (Gross Mass)		lbs (kg)	231 (105)		233 (106)	
Sound Pressure Level		dB(A)	55	57	55	57
Piping Connection	Liquid	in. (mm)	ϕ 1/4 × 3 (ϕ 6.4 × 3)		ϕ 1/4 × 3 (ϕ 6.4 × 3)	
	Gas	in. (mm)	ϕ 3/8 × 1, ϕ 1/2 × 2 (ϕ 9.5 × 1, ϕ 12.7 × 2)		ϕ 3/8 × 1, ϕ 1/2 × 2 (ϕ 9.5 × 1, ϕ 12.7 × 2)	
	Drain	in. (mm)	I.D. ϕ 1 (ϕ 25)		I.D. ϕ 1 (ϕ 25)	
Heat Insulation			Both Liquid and Gas Pipes		Both Liquid and Gas Pipes	
No. of Wiring Connections			3 for Power Supply, 4 for Interunit Wiring (Including Ground Wiring)		3 for Power Supply, 4 for Interunit Wiring (Including Ground Wiring)	
Max. Interunit Piping Length		ft (m)	230 (70) (for Total of Each Room)		230 (70) (for Total of Each Room)	
		ft (m)	82 (25) (for One Room)		82 (25) (for One Room)	
Amount of Additional Charge		oz/ft (g/m)	0.22 (20) (131-1/4 ft (40 m) or more)		0.22 (20) (131-1/4 ft (40 m) or more)	
Max. Installation Height Difference		ft (m)	49-1/4 (15) (Between Indoor Unit and Outdoor Unit)		49-1/4 (15) (Between Indoor Unit and Outdoor Unit)	
		ft (m)	24-5/8 (7.5) (Between Indoor Units)		24-5/8 (7.5) (Between Indoor Units)	
Conditions based on			Indoor ; 80°FDB (26.7°CDB) / 67°FWB (19.4°CWB) Outdoor ; 95°FDB (35°CDB) / 75°FWB (24°CWB)	Indoor ; 70°FDB (21°CDB) / 60°FWB (15.6°CWB) Outdoor ; 47°FDB (8.3°CDB) / 43°FWB (6°CWB)	Indoor ; 80°FDB (26.7°CDB) / 67°FWB (19.4°CWB) Outdoor ; 95°FDB (35°CDB) / 75°FWB (24°CWB)	Indoor ; 70°FDB (21°CDB) / 60°FWB (15.6°CWB) Outdoor ; 47°FDB (8.3°CDB) / 43°FWB (6°CWB)
			Piping length: 25 ft (7.5 m)		Piping length: 25 ft (7.5 m)	
Drawing No.			C: 3D158476		C: 3D158477	

Conversion Formulae
kcal/h = kW × 860 Btu/h = kW × 3412 cfm = m³/min × 35.3

Model			4MXT36AVJU9		4MXTH36AVJU9	
			Cooling	Heating	Cooling	Heating
Power Supply		Phase	1 ϕ		1 ϕ	
		Hz, V	60 Hz, 208 - 230 V		60 Hz, 208 - 230 V	
COP@5°F		W/W	—	1.9	—	1.9
EER2		Btu/W·h	12.0	—	12.0	—
SEER2			20.0	—	20.0	—
HSPF2			—	9.5	—	9.5
Casing Color			Ivory White		Ivory White	
Compressor	Type		Hermetically Sealed Swing Type		Hermetically Sealed Swing Type	
	Model		2Y350BPCX2A		2Y350BPCX2A	
	Motor Output	W	3,300		3,300	
Refrigerant Oil	Model		FW68DE		FW68DE	
	Charge	fl oz (L)	51.4 (1.52)		51.4 (1.52)	
Refrigerant	Type		R-32		R-32	
	Charge	lbs (kg)	6.94 (3.15)		6.94 (3.15)	
Airflow Rates		cfm	3,137	3,137	3,137	3,137
		m³/min	88.7	88.7	88.7	88.7
Fan	Type		Propeller		Propeller	
	Motor Output	W	192		192	
	Running Current	A	0.48	0.48	0.48	0.48
	Power Consumption	W	99.5	99.5	99.5	99.5
Starting Current		A	27.0		27.0	
Dimensions (H × W × D)		in. (mm)	34-1/4 × 43-5/16 × 18-1/8 (870 × 1,100 × 460)		34-1/4 × 43-5/16 × 18-1/8 (870 × 1,100 × 460)	
Packaged Dimensions (H × W × D)		in. (mm)	39-15/16 × 46-7/8 × 21-15/16 (1,014 × 1,190 × 558)		39-15/16 × 46-7/8 × 21-15/16 (1,014 × 1,190 × 558)	
Weight (Mass)		lbs (kg)	216 (98)		218 (99)	
Gross Weight (Gross Mass)		lbs (kg)	234 (106)		236 (107)	
Sound Pressure Level		dB(A)	55	57	55	57
Piping Connection	Liquid	in. (mm)	ϕ 1/4 × 4 (ϕ 6.4 × 4)		ϕ 1/4 × 4 (ϕ 6.4 × 4)	
	Gas	in. (mm)	ϕ 3/8 × 1, ϕ 1/2 × 2, ϕ 5/8 × 1 (ϕ 9.5 × 1, ϕ 12.7 × 2, ϕ 15.9 × 1)		ϕ 3/8 × 1, ϕ 1/2 × 2, ϕ 5/8 × 1 (ϕ 9.5 × 1, ϕ 12.7 × 2, ϕ 15.9 × 1)	
	Drain	in. (mm)	I.D. ϕ 1 (ϕ 25)		I.D. ϕ 1 (ϕ 25)	
Heat Insulation			Both Liquid and Gas Pipes		Both Liquid and Gas Pipes	
No. of Wiring Connections			3 for Power Supply, 4 for Interunit Wiring (Including Ground Wiring)		3 for Power Supply, 4 for Interunit Wiring (Including Ground Wiring)	
Max. Interunit Piping Length		ft (m)	230 (70) (for Total of Each Room)		230 (70) (for Total of Each Room)	
		ft (m)	98 (30) (for One Room)		98 (30) (for One Room)	
Amount of Additional Charge		oz/ft (g/m)	0.22 (20) (131-1/4 ft (40 m) or more)		0.22 (20) (131-1/4 ft (40 m) or more)	
Max. Installation Height Difference		ft (m)	49-1/4 (15) (Between Indoor Unit and Outdoor Unit)		49-1/4 (15) (Between Indoor Unit and Outdoor Unit)	
		ft (m)	24-5/8 (7.5) (Between Indoor Units)		24-5/8 (7.5) (Between Indoor Units)	
Conditions based on			Indoor ; 80°FDB (26.7°CDB) / 67°FWB (19.4°CWB) Outdoor ; 95°FDB (35°CDB) / 75°FWB (24°CWB)	Indoor ; 70°FDB (21°CDB) / 60°FWB (15.6°CWB) Outdoor ; 47°FDB (8.3°CDB) / 43°FWB (6°CWB)	Indoor ; 80°FDB (26.7°CDB) / 67°FWB (19.4°CWB) Outdoor ; 95°FDB (35°CDB) / 75°FWB (24°CWB)	Indoor ; 70°FDB (21°CDB) / 60°FWB (15.6°CWB) Outdoor ; 47°FDB (8.3°CDB) / 43°FWB (6°CWB)
			Piping length: 25 ft (7.5 m)		Piping length: 25 ft (7.5 m)	
Drawing No.			C: 3D158478		C: 3D158479	

Conversion Formulae
kcal/h = kW × 860 Btu/h = kW × 3412 cfm = m³/min × 35.3

Model			5MXT40AVJU9		5MXTH40AVJU9	
			Cooling	Heating	Cooling	Heating
Power Supply		Phase	1 ϕ		1 ϕ	
		Hz, V	60 Hz, 208 - 230 V		60 Hz, 208 - 230 V	
COP@5°F		W/W	—	1.9	—	1.9
EER2		Btu/W·h	11.7	—	11.7	—
SEER2			20.0	—	20.0	—
HSPF2			—	9.5	—	9.5
Casing Color			Ivory White		Ivory White	
Compressor	Type		Hermetically Sealed Swing Type		Hermetically Sealed Swing Type	
	Model		2Y350BPCX2A		2Y350BPCX2A	
	Motor Output	W	3,300		3,300	
Refrigerant Oil	Model		FW68DE		FW68DE	
	Charge	fl oz (L)	51.4 (1.52)		51.4 (1.52)	
Refrigerant	Type		R-32		R-32	
	Charge	lbs (kg)	6.94 (3.15)		6.94 (3.15)	
Airflow Rates		cfm	3,137	3,137	3,137	3,137
		m³/min	88.7	88.7	88.7	88.7
Fan	Type		Propeller		Propeller	
	Motor Output	W	192		192	
	Running Current	A	0.48	0.48	0.48	0.48
	Power Consumption	W	99.5	99.5	99.5	99.5
Starting Current		A	27.0		27.0	
Dimensions (H × W × D)		in. (mm)	34-1/4 × 43-5/16 × 18-1/8 (870 × 1,100 × 460)		34-1/4 × 43-5/16 × 18-1/8 (870 × 1,100 × 460)	
Packaged Dimensions (H × W × D)		in. (mm)	39-15/16 × 46-7/8 × 21-15/16 (1,014 × 1,190 × 558)		39-15/16 × 46-7/8 × 21-15/16 (1,014 × 1,190 × 558)	
Weight (Mass)		lbs (kg)	219 (100)		221 (100)	
Gross Weight (Gross Mass)		lbs (kg)	238 (108)		239 (108)	
Sound Pressure Level		dB(A)	55	57	55	57
Piping Connection	Liquid	in. (mm)	ϕ 1/4 × 5 (ϕ 6.4 × 5)		ϕ 1/4 × 5 (ϕ 6.4 × 5)	
	Gas	in. (mm)	ϕ 3/8 × 1, ϕ 1/2 × 2, ϕ 5/8 × 2 (ϕ 9.5 × 1, ϕ 12.7 × 2, ϕ 15.9 × 2)		ϕ 3/8 × 1, ϕ 1/2 × 2, ϕ 5/8 × 2 (ϕ 9.5 × 1, ϕ 12.7 × 2, ϕ 15.9 × 2)	
	Drain	in. (mm)	I.D. ϕ 1 (ϕ 25)		I.D. ϕ 1 (ϕ 25)	
Heat Insulation			Both Liquid and Gas Pipes		Both Liquid and Gas Pipes	
No. of Wiring Connections			3 for Power Supply, 4 for Interunit Wiring (Including Ground Wiring)		3 for Power Supply, 4 for Interunit Wiring (Including Ground Wiring)	
Max. Interunit Piping Length		ft (m)	262 (80) (for Total of Each Room)		262 (80) (for Total of Each Room)	
		ft (m)	98 (30) (for One Room)		98 (30) (for One Room)	
Amount of Additional Charge		oz/ft (g/m)	0.22 (20) (131-1/4 ft (40 m) or more)		0.22 (20) (131-1/4 ft (40 m) or more)	
Max. Installation Height Difference		ft (m)	49-1/4 (15) (Between Indoor Unit and Outdoor Unit)		49-1/4 (15) (Between Indoor Unit and Outdoor Unit)	
		ft (m)	24-5/8 (7.5) (Between Indoor Units)		24-5/8 (7.5) (Between Indoor Units)	
Conditions based on			Indoor ; 80°FDB (26.7°CDB) / 67°FWB (19.4°CWB) Outdoor ; 95°FDB (35°CDB) / 75°FWB (24°CWB)	Indoor ; 70°FDB (21°CDB) / 60°FWB (15.6°CWB) Outdoor ; 47°FDB (8.3°CDB) / 43°FWB (6°CWB)	Indoor ; 80°FDB (26.7°CDB) / 67°FWB (19.4°CWB) Outdoor ; 95°FDB (35°CDB) / 75°FWB (24°CWB)	Indoor ; 70°FDB (21°CDB) / 60°FWB (15.6°CWB) Outdoor ; 47°FDB (8.3°CDB) / 43°FWB (6°CWB)
			Piping length: 25 ft (7.5 m)		Piping length: 25 ft (7.5 m)	
Drawing No.			C: 3D158484		C: 3D158481	

Conversion Formulae
kcal/h = kW × 860 Btu/h = kW × 3412 cfm = m³/min × 35.3

Part 3
Printed Circuit Board Connector Wiring Diagram

1. Indoor Unit....26
2. Outdoor Unit....28
   2.1 2/3/4MXM, 2MXT....28
   2.2 5MXM, 3/4/5MXT, 3/4/5MXTH....31

1. Indoor Unit

Control PCB (A1P)

1)	S1	Connector for terminal strip
2)	S6	Connector for swing motor (horizontal blade)
3)	S91	Connector for humidity sensor PCB (A4P)
4)	S200	Connector for DC fan motor
5)	S403	Connector for optional adaptor
6)	S430	Connector for wireless LAN connection PCB (A3P)
7)	S501	Connector for indoor heat exchanger thermistor (R1T)
8)	S800	Connector for display/signal receiver PCB (A2P)
9)	FG	Connector for terminal strip (frame ground)
10)	FU1	Fuse (3.15 A, 250 V)
11)	V2	Varistor

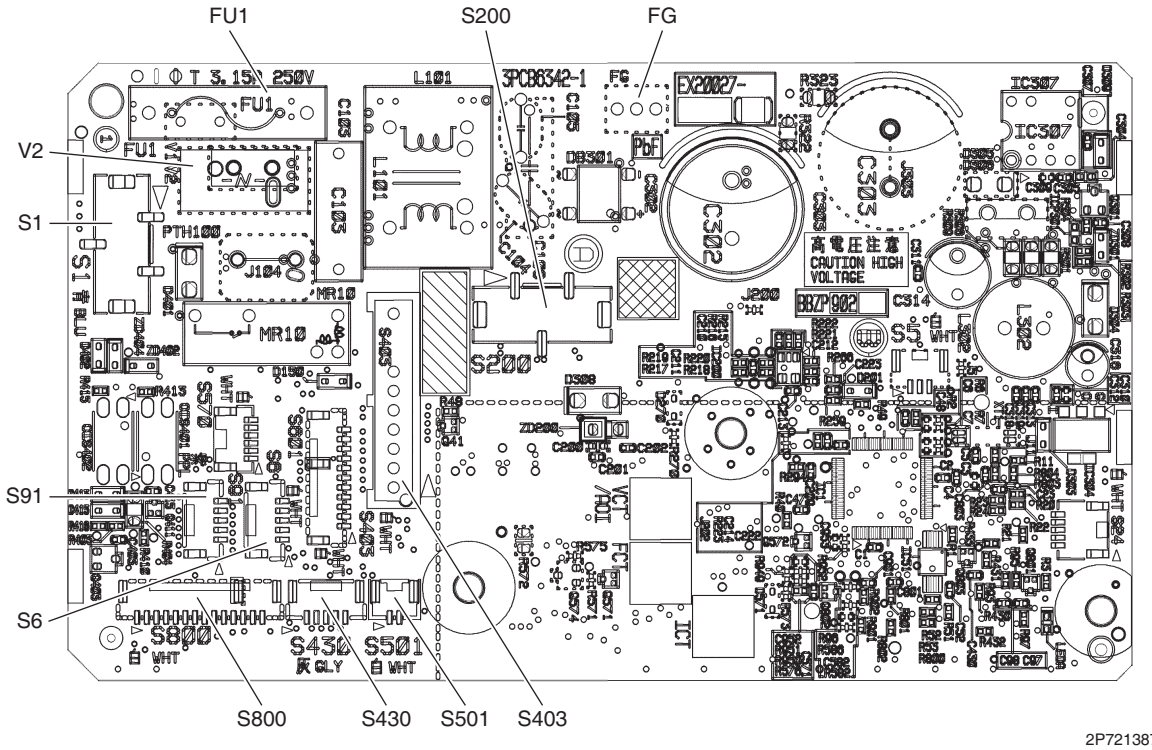

2P721387-10
2P721387-11

Display/Signal Receiver PCB (A2P)

1)	S27	Connector for control PCB (A1P)
2)	SW1	Indoor unit **ON/OFF** switch (Forced cooling operation **ON/OFF** switch) Refer to page 161 for details of forced cooling operation.
3)	LED1	LED for operation (green)
4)	LED2	LED for timer (orange)
5)	LED3	LED for optional wireless LAN connection (orange)

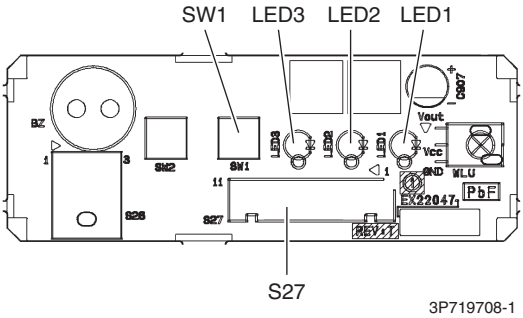

3P719708-1

Wireless LAN connection PCB (A3P)

1)	S90	Connector for control PCB (A1P)

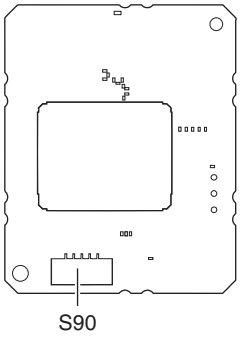

2P695897-7

Humidity sensor PCB (A4P)

1)	CON1	Connector for control PCB (A1P)

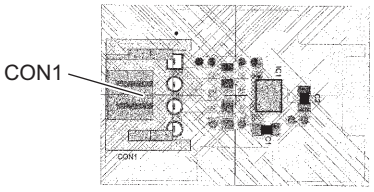

3E860031-1

2. Outdoor Unit

2.1 2/3/4MXM, 2MXT

Main PCB (A1P)

1)	X190A	Connector for ground wire
2)	X200A	Connector for DC fan motor
3)	X240A, X300A, X480A	Connector for sub PCB (A2P)
4)	X800A	Connector for four way valve coil
5)	X820A	Connector for overload protector and high pressure switch
6)	X900A	Connector for thermistors (outdoor temperature, outdoor heat exchanger, discharge pipe)
7)	HL1, HN1	Faston tab for terminal strip (power supply)
8)	U, V, W	Faston tab for compressor
9)	F1U (FU1), F2U (FU2)	Fuse (3.15 A, 250 V)
10)	F3U (FU3)	Fuse (30 A, 250 V)

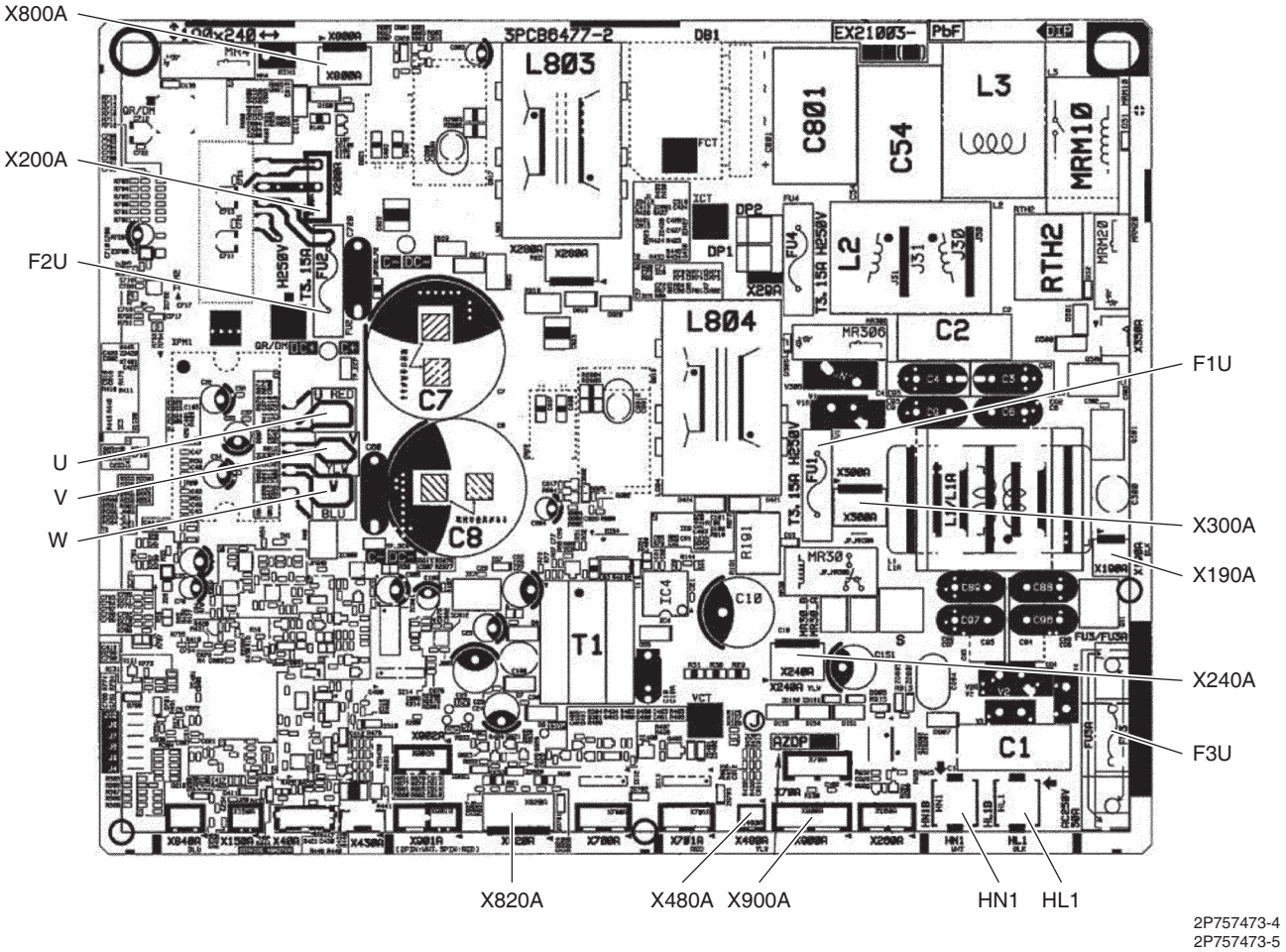

2P757473-4
2P757473-5

Note The symbols in the parenthesis are the names on the appropriate wiring diagram.

Sub PCB (A2P)

1)	X1A	Connector for main PCB (A1P)
2)	X141A	Connector for service monitor PCB (A3P)
3)	X161A	Connector for COOL/HEAT lock Refer to page 173 for details.
4)	X301A	Connector for terminal block (indoor - outdoor transmission)
5)	X371A	Connector for main PCB (A1P)
6)	X621A	Connector for electronic expansion valve coil A port
7)	X622A	Connector for electronic expansion valve coil B port
8)	X623A	Connector for electronic expansion valve coil C port (24/36 class)
9)	X624A	Connector for electronic expansion valve coil D port (36 class)
10)	X931A	Connector for gas pipe thermistor
11)	X951A	Connector for liquid pipe thermistor
12)	HN1	Faston tab for main PCB (A1P)
13)	DP3, DP4	Wire harness for drain pan heater (MXTH-A only)
14)	F1U	Fuse (3.15 A, 250 V)

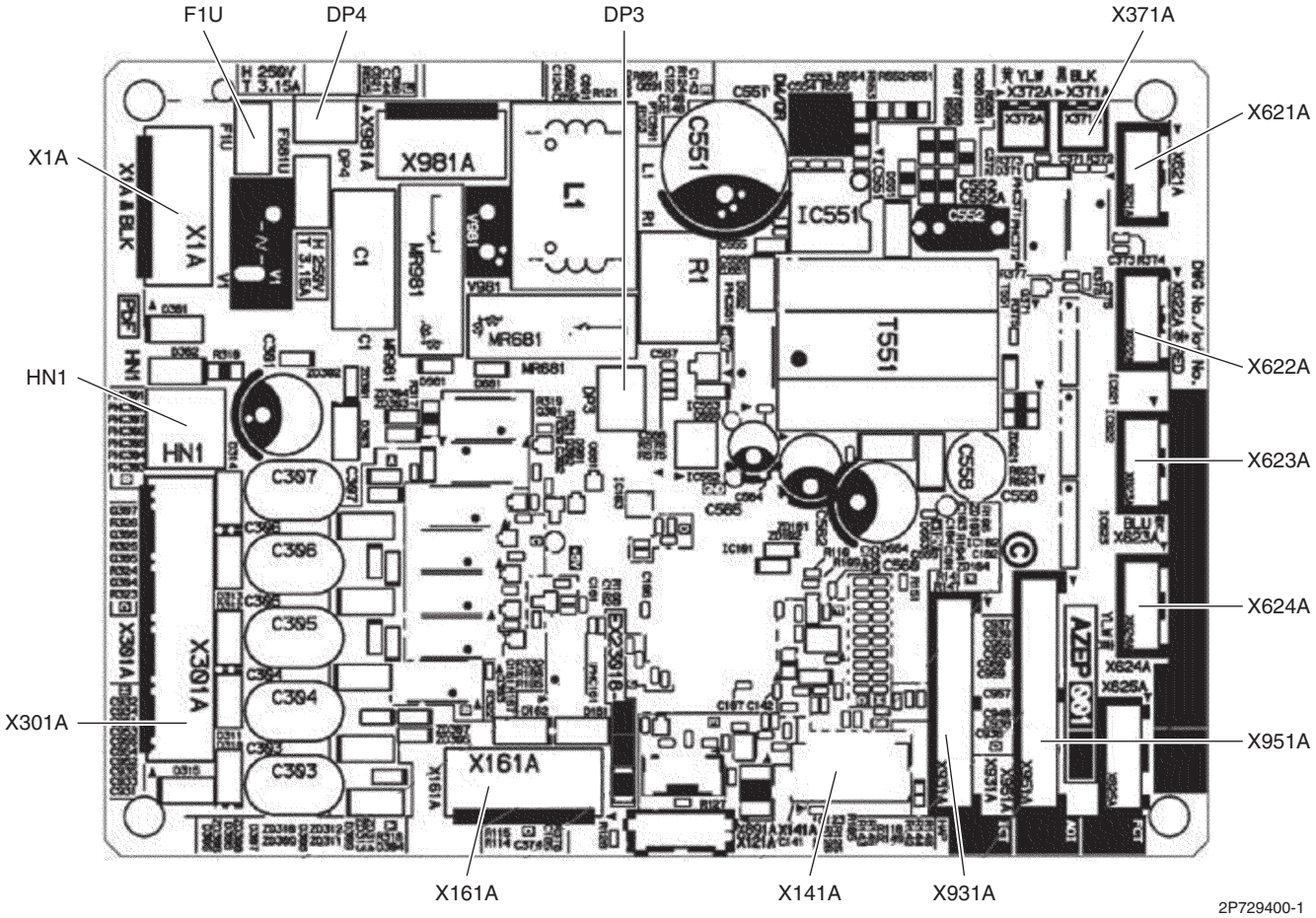

Service Monitor PCB (A3P)

1)	S501, S502	Connector for sub PCB (A2P)
2)	LED A	LED for service monitor (green)
3)	LED1, LED2, LED3, LED4, LED5	LED for service monitor (red)
4)	SW1	Forced cooling operation **ON/OFF** switch Refer to page 161 for details.
5)	SW2	Operation mode switch Refer to page 161 for details.
6)	SW3	Wiring error check switch Refer to page 162 for details.
7)	SW4	Priority room setting switch Refer to page 172 for details.
8)	SW6-1	NIGHT QUIET mode setting switch Refer to page 174 for details.
9)	J_DP	Jumper for drain pan heater

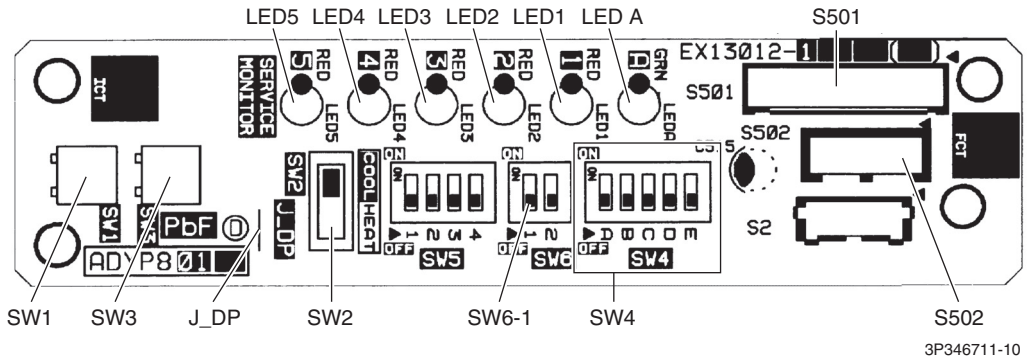

★ SW6-2 and all the switches of SW5 have no function. Keep them OFF.

2.2 5MXM, 3/4/5MXT, 3/4/5MXTH

Main PCB (A1P)

1)	S, S10	Connector for terminal block (indoor - outdoor transmission)
2)	S15	Connector for COOL/HEAT lock Refer to page 173 for details.
3)	S20	Connector for electronic expansion valve coil A port
4)	S21	Connector for electronic expansion valve coil B port
5)	S22	Connector for electronic expansion valve coil C port (24/36/40/48 class)
6)	S23	Connector for electronic expansion valve coil D port (36/40/48 class)
7)	S24	Connector for electronic expansion valve coil E port (40/48 class)
8)	S40	Connector for overload protector and high pressure switch
9)	S60	Connector for pressure sensor
10)	S70	Connector for DC fan motor
11)	S80	Connector for four way valve coil
12)	S90	Connector for thermistors (outdoor temperature, outdoor heat exchanger, discharge pipe)
13)	S92	Connector for gas pipe thermistor
14)	S93	Connector for liquid pipe thermistor
15)	S201, S202	Connector for service monitor PCB (A2P)
16)	DP1, DP2	Connector for drain pan heater (MXTH-A only)
17)	HL1, HN1	Faston tab for terminal strip (power supply)
18)	E1, E2, E3	Connector for ground wire
19)	W, V, U	Faston tab for compressor
20)	FU1, FU2, FU10	Fuse (3.15 A, 250 V)
21)	FU3	Fuse (30 A, 250 V)

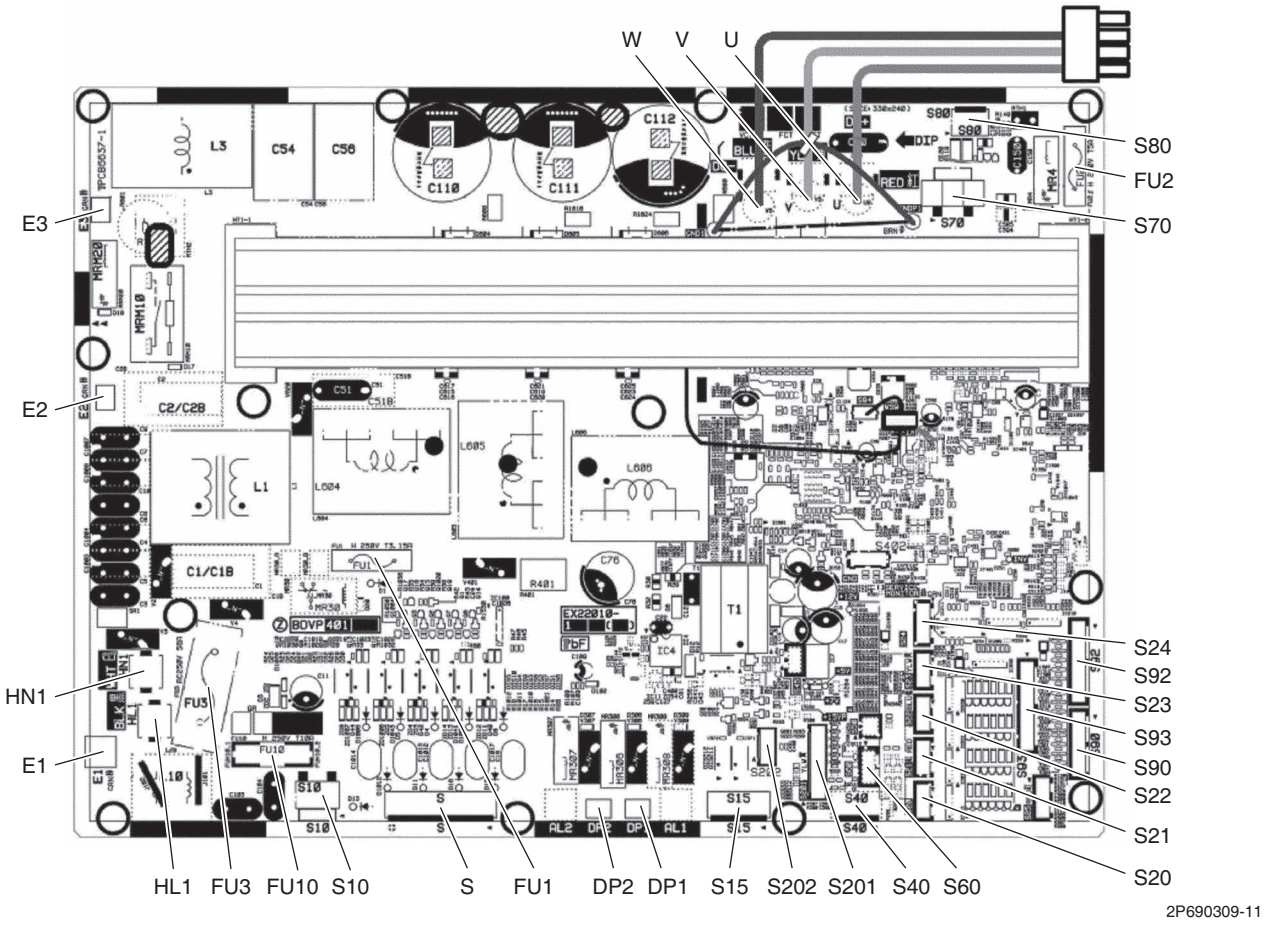

Service Monitor PCB (A2P)

1)	S501, S502	Connector for main PCB (A1P)
2)	LED A	LED for service monitor (green)
3)	LED1, LED2, LED3, LED4, LED5	LED for service monitor (red)
4)	SW1	Forced cooling operation **ON/OFF** switch Refer to page 161 for details.
5)	SW2	Operation mode switch Refer to page 161 for details.
6)	SW3	Wiring error check switch Refer to page 162 for details.
7)	SW4	Priority room setting switch Refer to page 172 for details.
8)	SW6-1	NIGHT QUIET mode setting switch Refer to page 174 for details.
9)	J_DP	Jumper for drain pan heater

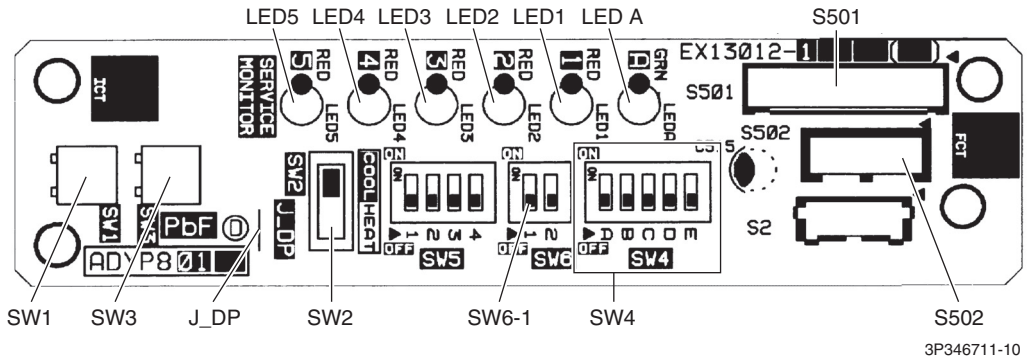

★ SW6-2 and all the switches of SW5 have no function. Keep them OFF.

Part 4
Functions and Control

1. Main Functions 34
- 1.1 Temperature Control 34
- 1.2 Frequency Principle 34
- 1.3 Airflow Direction Control 36
- 1.4 COMFORT AIRFLOW Operation 37
- 1.5 Fan Speed Control for Indoor Unit 38
- 1.6 Program Dry Operation 39
- 1.7 Automatic Cooling/Heating Change-over 40
- 1.8 Thermostat Control 41
- 1.9 NIGHT SET Mode 42
- 1.10 ECONO Operation 42
- 1.11 POWERFUL Operation 43
- 1.12 Brightness Setting of Indoor Unit Display 44
- 1.13 Wireless LAN Connection 45
- 1.14 Other Functions 49

2. Control Specification 50
- 2.1 Thermistor Functions 50
- 2.2 Mode Hierarchy 52
- 2.3 Compressor Speed Control 53
- 2.4 Controls at Mode Changing/Start-up 55
- 2.5 Discharge Pipe Temperature Control 57
- 2.6 Input Current Control 58
- 2.7 Freeze-up Protection Control 59
- 2.8 Heating Peak-cut Control 60
- 2.9 High Pressure Protection Control 61
- 2.10 Outdoor Fan Control 62
- 2.11 Liquid Compression Protection Function 62
- 2.12 Defrost Control 62
- 2.13 Low Compressor Speed High Pressure Limit 69
- 2.14 Electronic Expansion Valve Control 70
- 2.15 Malfunctions 75

1. Main Functions

1.1 Temperature Control

Definitions of Temperatures

The definitions of temperatures are classified as following.

- Room temperature: temperature of living space of the room
- Set temperature: temperature set by remote controller
- Room thermistor temperature: temperature detected by room temperature thermistor
- Target temperature: temperature determined by microcomputer

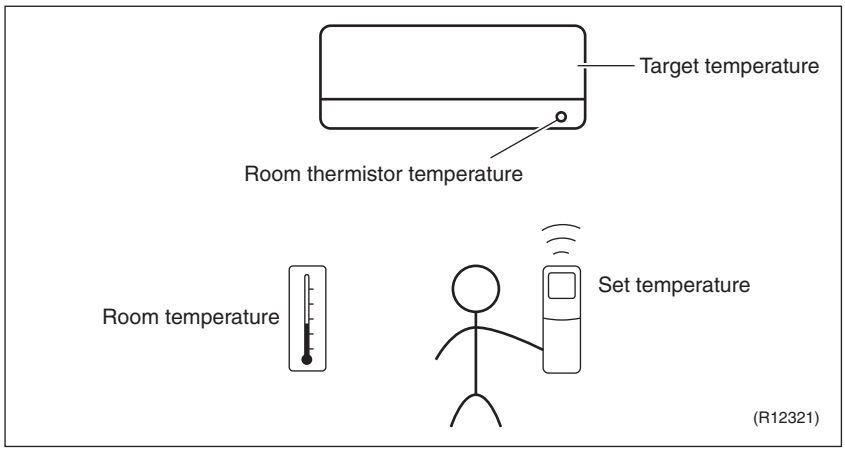

Temperature Control

The temperature of the room is detected by the room temperature thermistor. However, there is a difference between the temperature detected by room temperature thermistor and the temperature of living space of the room, depending on the type of the indoor unit or installation condition. In practice, the temperature control is done by the target temperature appropriately adjusted for the indoor unit and the temperature detected by room temperature thermistor.

1.2 Frequency Principle

Control Parameters

The compressor speed is controlled by the following 2 parameters:

- The load condition of the operating indoor unit
- The difference between the room thermistor temperature and the target temperature

The target compressor speed is adapted by additional parameters in the following cases:

- Compressor speed restrictions
- Initial settings
- Forced cooling operation

Inverter Principle

To regulate the capacity, a compressor speed control is needed. The inverter makes it possible to control the rotation speed of the compressor. The followings explain the inverter principle:

Phase 1

The supplied AC power source is converted into the DC power source for the present.

Phase 2

The DC power source is reconverted into the three phase AC power source with variable frequency.

- When the frequency increases, the rotation speed of the compressor increases resulting in an increase of refrigerant circulation. This leads to a larger amount of heat exchange per unit.
- When the frequency decreases, the rotation speed of the compressor decreases resulting in a decrease of refrigerant circulation. This leads to a smaller amount of heat exchange per unit.

The following drawing shows a schematic view of the inverter principle:

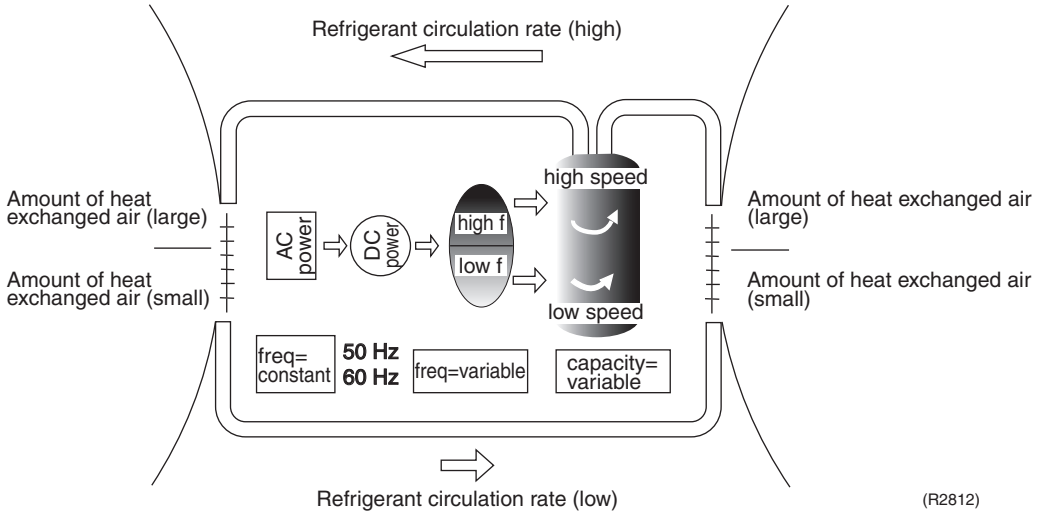

Inverter Features

The inverter provides the following features:

- The regulating capacity can be changed according to the changes in the outdoor temperature and cooling/heating load.
- Quick heating and quick cooling
  The rotation speed of the compressor is increased when starting the heating (cooling). This enables to reach the set temperature quickly.
- Even during extreme cold weather, high capacity is achieved. It is maintained even when the outdoor temperature is 2°C (35.6°F).
- Comfortable air conditioning
  A fine adjustment is integrated to keep the room temperature constant.
- Energy saving heating and cooling
  Once the set temperature is reached, the energy saving operation enables to maintain the room temperature at low power.

Compressor Speed Limits

The following functions regulate maximum compressor speed:

Low compressor speed

- Four way valve operation compensation. Refer to page 55.

High compressor speed

- Compressor protection function. Refer to page 56.
- Discharge pipe temperature control. Refer to page 57.
- Input current control. Refer to page 58.
- Freeze-up protection control. Refer to page 59.
- Heating peak-cut control. Refer to page 60.
- Defrost control. Refer to page 62.

Forced Cooling Operation

Refer to page 161 for details.

1.3 Airflow Direction Control

Power-Airflow (Dual) Flap(s)

The large flap sends a large volume of air downward to the floor and provides an optimum control in cooling, dry and heating operation.

Cooling/Dry

During cooling or dry operation, the flap retracts into the indoor unit. Then, cool air can be blown far and distributed all over the room.

Heating

During heating operation, the large flap directs airflow downward to spread the warm air to the entire room.

Wide-Angle Louvers

The louvers, made of elastic synthetic resin, provide a wide range of airflow that guarantees comfortable air distribution.

Auto-Swing

The following tables explain the auto-swing process for cooling, dry, heating and fan:

	Flap (up and down)		
	Cooling/Dry	Heating	Fan
07/09/12 class	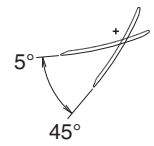 R4004115	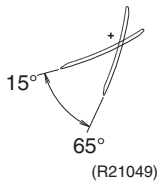 (R21049)	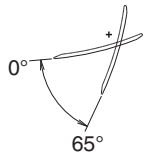 (R21050)
15/18/24 class	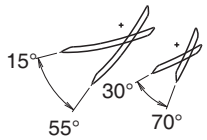 R4004124	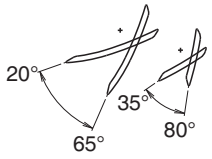 R4004125	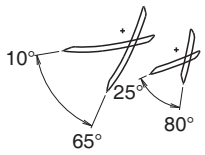 R4004126

1.4 COMFORT AIRFLOW Operation

Outline

The flow of air will be in the upward direction while in COOL/DRY operation and in the downward direction while in HEAT operation, which will provide a comfortable wind that will not come in direct contact with people.

Operation

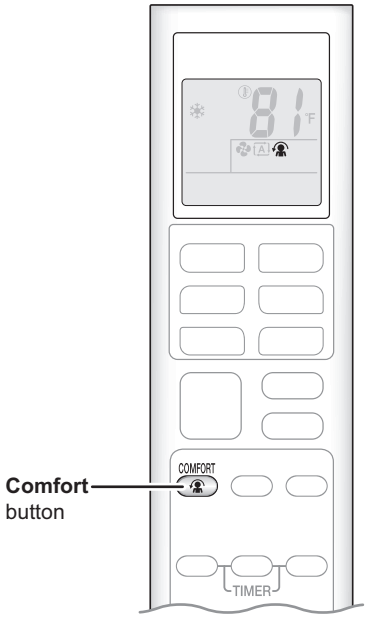

To start the operation:

- Press **Comfort** button.
  The icon appears on the LCD of the remote controller.

	COOL / DRY operation	HEAT operation	FAN operation
Flaps direction	Goes up	Goes down	Not available
Airflow rate	AUTO		

To stop the operation:

- Press **Comfort** button again.
  The icon disappears from the LCD of the remote controller. The flaps will return to the memorized position before the start of COMFORT AIRFLOW operation

Note(s)

- POWERFUL operation and COMFORT AIRFLOW operation cannot be used at the same time.
- When in AUTO operation, the flap direction differs based on the operation mode (COOL or HEAT) as shown in the table above.
- If the upward and downward airflow direction is selected, the COMFORT AIRFLOW function will be canceled. Priority is given to the function of whichever button is pressed last.

1.5 Fan Speed Control for Indoor Unit

Outline

Phase control and fan speed control contains 9 steps: LLL, LL, SL, L, ML, M, MH, H, and HH. The airflow rate can be automatically controlled depending on the difference between the room thermistor temperature and the target temperature.

Automatic Fan Speed Control

In automatic fan speed operation, the step SL is not available.

Step	Cooling	Heating
LLL	⟺	⟺
LL		
L		
ML		
M		
MH		
H		
HH (POWERFUL)		

R4003512

⟺ = The airflow rate is automatically controlled within this range when **FAN** setting button is set to automatic.

■ **Cooling**

The following drawing explains the principle of fan speed control for cooling.

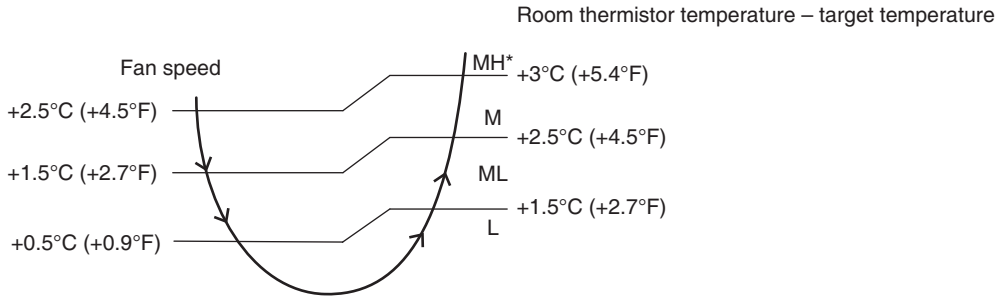

R4004133

∗ The upper limit is at M tap in 30 minutes from the operation start.

■ **Heating**

In heating operation, the fan speed is regulated according to the indoor heat exchanger temperature and the difference between the room thermistor temperature and the target temperature.

Note(s)

The fan stops during defrost operation.

1.6 Program Dry Operation

Outline

Program dry operation removes humidity while preventing the room temperature from lowering. Since the microcomputer controls both the temperature and airflow rate, the temperature adjustment and **FAN** setting buttons are inoperable.

Details

The microcomputer automatically sets the temperature and airflow rate. The difference between the room thermistor temperature at start-up and the target temperature is divided into two zones. Then, the unit operates in an appropriate capacity for each zone to maintain the temperature and humidity at a comfortable level.

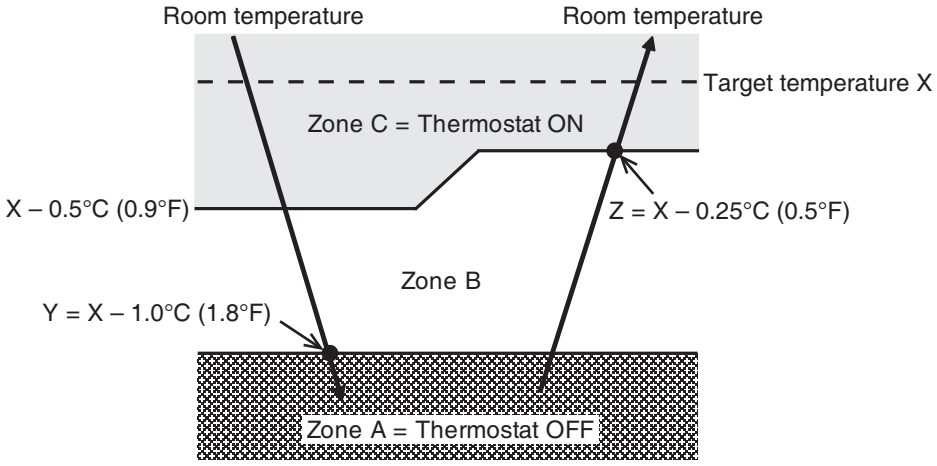

R4004134

Room thermistor temperature at start-up	Target temperature X	Thermostat OFF point Y	Thermostat ON point Z ★
24°C or more (75.2°F or more)	Room thermistor temperature at start-up	X – 1.0°C (X – 1.8°F)	X – 0.25°C (X – 0.5°F)
18 ~ 23.5°C (64.4 ~ 74.3°F)		X – 0.75°C (X – 1.4°F)	X – 0.25°C (X – 0.5°F)
17.5°C or less (63.5°F or less)	18°C (64.4°F)	X – 0.75°C (X – 1.4°F)	X – 0.25°C = 17.75°C (X – 0.5°F = 63.9°F)

★ Thermostat turns on also when the room temperature is in the zone B for 10 minutes.

1.7 Automatic Cooling/Heating Change-over

Outline

When the automatic operation is selected with the remote controller, the microcomputer automatically determines the operation mode as cooling or heating according to the room temperature and the set temperature at start-up.
The unit automatically switches the operation mode to maintain the room temperature at the set temperature.

Details

Ts: set temperature (set by remote controller)
Tt: target temperature (determined by microcomputer)
Tr: room thermistor temperature (detected by room temperature thermistor)
C: correction value

1. The set temperature (Ts) determines the target temperature (Tt).
   (Ts = 18 ~ 30°C (64.4 ~ 86°F))
2. The target temperature (Tt) is calculated as;
   Tt = Ts + C
   where C is the correction value.
   C = 0°C (0°F)
3. Thermostat ON/OFF point and operation mode switching point are as follows.
   (1) Heating → Cooling switching point:
   Tr ≥ Tt + 3.0°C (+ 5.4°F)
   (2) Cooling → Heating switching point:
   Tr < Tt – 2.5°C (– 4.5°F)
   (3) Thermostat ON/OFF point is the same as the ON/OFF point of cooling or heating operation.
4. During initial operation
   Tr ≥ Ts : Cooling operation
   Tr < Ts : Heating operation

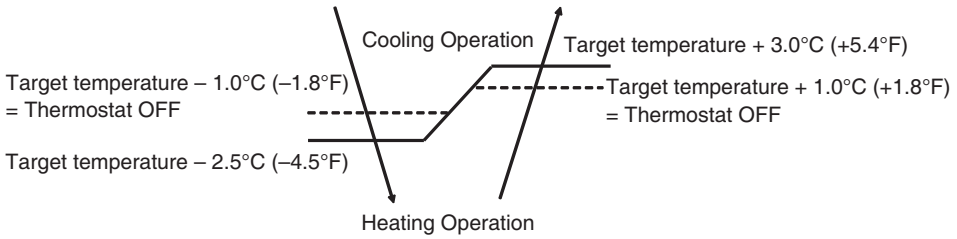

R4004135

Ex: When the target temperature is 25°C (77°F)
Cooling → 24°C (75.2°F): Thermostat OFF → 22.5°C (72.5°F): Switch to heating
Heating → 26°C (78.8°F): Thermostat OFF → 28°C (82.4°F): Switch to cooling

1.8 Thermostat Control

Outline

Thermostat control is based on the difference between the room thermistor temperature and the target temperature.

Details

Thermostat OFF Conditions

- The temperature difference is in the zone A.

Thermostat ON Conditions

- The temperature difference returns to the zone C after being in the zone A.
- The system resumes from defrost control in any zones except A.
- The operation turns on in any zones except A.
- The monitoring time has passed while the temperature difference is in the zone B.

Cooling	Dry	Heating
10 minutes	7.5 minutes	180 seconds

Cooling/Dry

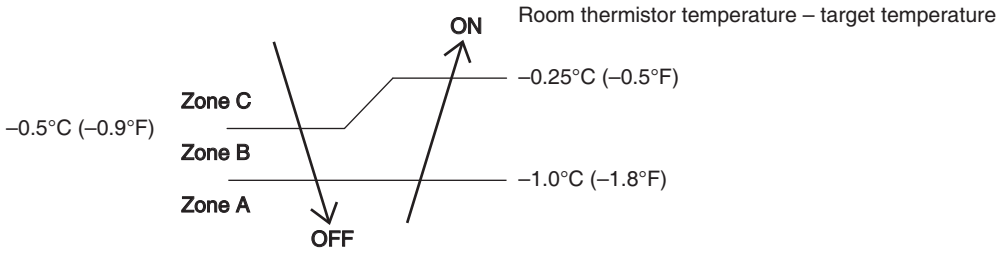

R4004136

Heating

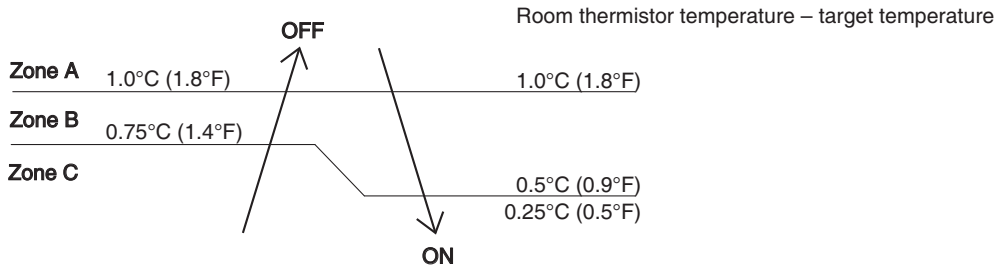

R4004137

Reference Refer to Temperature Control on page 34 for details.

1.9 NIGHT SET Mode

Outline

When the OFF TIMER is set, NIGHT SET mode is automatically activated. NIGHT SET mode keeps the airflow rate setting.

Details

NIGHT SET mode continues operation at the target temperature for the first one hour, then automatically raises the target temperature slightly in the case of cooling, or lowers the target temperature slightly in the case of heating. This prevents excessive cooling in summer and excessive heating in winter to ensure comfortable sleeping conditions, and also conserves electricity.

Cooling

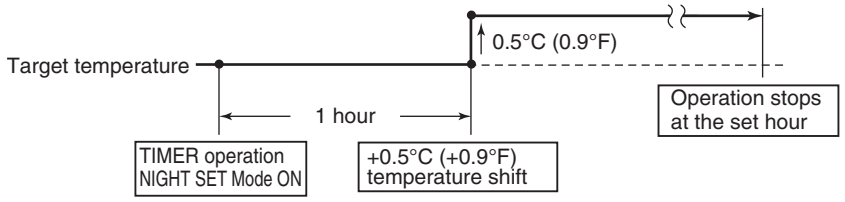

(R23917)

Heating

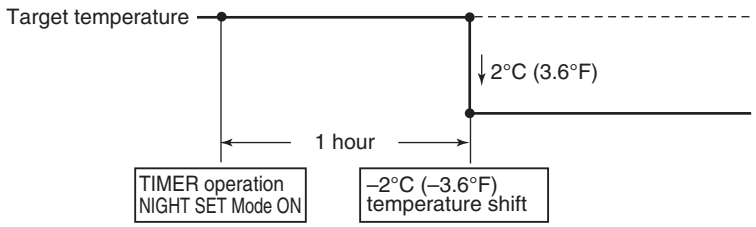

(R23918)

1.10 ECONO Operation

Outline

ECONO operation reduces the maximum operating current and the power consumption. This operation is particularly convenient for energy-saving. It is also a major bonus when breaker capacity does not allow the use of multiple electrical devices and air conditioners. It can be easily activated by pressing **ECONO** button on the wireless remote controller.

Details

- When this function is activated, the maximum capacity also decreases.
- The remote controller can send the ECONO command when the unit is in cooling, heating, dry, or automatic operation. This function can only be set when the unit is running. Pressing **ECONO** button on the remote controller cancels the function.
- This function and POWERFUL operation cannot be used at the same time. The latest command has the priority.

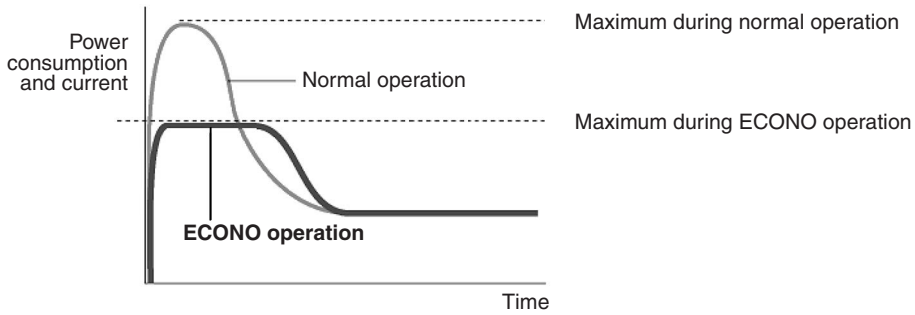

(R22012)

1.11 POWERFUL Operation

Outline

In order to exploit the cooling and heating capacity to full extent, the air conditioner can be operated by increasing the indoor fan rotating speed and the compressor speed.

Details

When **POWERFUL** button is pressed, the fan speed and target temperature are converted to the following states for 20 minutes.

Operation mode	Fan speed	Target temperature
COOL	H tap + **A** rpm	18°C (64.4°F)
DRY	Dry rotating speed + **A** rpm	Lowered by 2.5°C (4.5°F)
HEAT	H tap + **A** rpm	31°C (87.8°F)
FAN	H tap + **A** rpm	—
AUTO	Same as cooling/heating in POWERFUL operation	The target temperature is kept unchanged.

A = 40 ~ 80 rpm (depending on the model)

Ex: POWERFUL operation in cooling

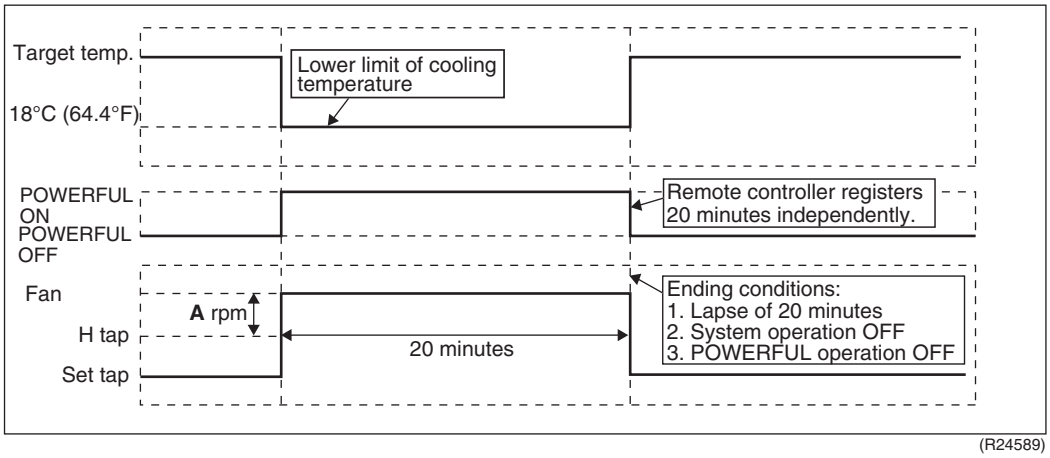

Note(s)

- During POWERFUL operation, the cooling/heating efficiency of the other rooms may be slightly reduced.
- POWERFUL operation cannot be used together with ECONO, COMFORT AIRFLOW or OUTDOOR UNIT QUIET operation.

1.12 Brightness Setting of Indoor Unit Display

Outline

The brightness of the indoor unit display can be adjusted as desired. Also, the display can be turned OFF.

Details

1. Press and hold **FAN** button for 5 seconds.
2. Press **TEMP ▲** button to select menu number **1**.
   LED appears and **1** blinks.

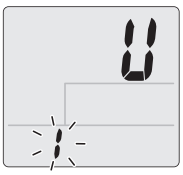

R4004121

3. Press **FAN** button to confirm the select setting.
4. Press **TEMP ▲** or **TEMP ▼** button to change the setting as follows:

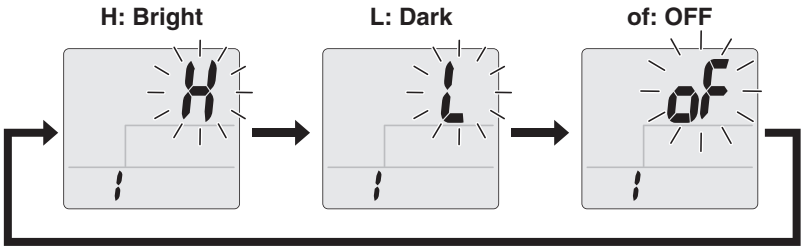

R4004122

5. Press **FAN** button again. Brightness will be set to the chosen value.
6. Press and hold **FAN** button for 5 seconds to return to the default screen.

Note(s)

The display automatically returns to the default screen after 60 seconds. To return to the default screen sooner, press **CANCEL** button twice.

1.13 Wireless LAN Connection

Operation

Wireless LAN connection adapter

The Wireless LAN connection adapter function requires the Daikin One Home for connecting to the air conditioner and controlling it via your smartphone or tablet over your network.

Attention

- **Wireless LAN sends and receives data using radio waves so there is a risk of transmitted data being subject to eavesdropping and illegal access. When using wireless LAN, manage the SSID/KEY of the wireless LAN connection adapter, the SSID/KEY of the wireless router, and the app login information so that they will not be known to others, and ensure that you have an adequate understanding of the risks involved.**
  In the case that the product is accessed and operated illegally, turn off the wireless LAN connection adapter function.
- **Do not use this product near a microwave oven. (This can affect wireless LAN communications.)**
- **This product cannot be directly connected to the communication line of a telecommunications carrier (internet service provider, etc.). When connecting to the internet, be sure to connect via a device such as a router.**
  When the wireless LAN connection adapter function is turned on, the right side of the air conditioner may become slightly warm, but this is not an abnormality.

⚠ WARNING

- While the Wireless LAN connection adapter operates, it may affect persons using cardiac pacemakers or defibrillators.
  This product may cause electromagnetic interference.
- While the Wireless LAN connection adapter operates, it may affect automatic doors or fire alarm equipment.
  This product may cause faulty behavior of the equipment.

Configuration

- The user is responsible for providing the following items before using this product:
  - ■ Smartphone or tablet PC
  - ■ Internet line and communicating device (Modem/router or similar device)
  - ■ Wireless LAN access point
  - ■ Application name: [Daikin One Home] (free)
    For details on the installation method for the Daikin One Home.

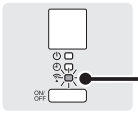

Display

Wireless LAN connection adapter lamp (Orange)

- The Wireless LAN connection adapter lamp lights when connecting to a router (Wireless LAN access point).
- For Wireless LAN connection adapter operation.

⚠ WARNING

When operating an air conditioner from outside the home, it is not possible to check the air conditioner or the surroundings of the air conditioner, or the state of the people in the room. Therefore, make sure to adequately check for safety before use.
In some cases, there is a risk of death, severe injury, or property damage.

■ Check the following in advance (while at home)

- Timer settings or reservations that other users may have made. (There is a risk of causing harm to the health of people, animals, or plants in the home if operation starts and stops unexpectedly)
- There are no signs of abnormality in the air conditioning. Harm will not be caused to people or to the room if there is a change in airflow. (For example, that there are no objects nearby that might blow over) (There is a risk of objects falling due to airflow and causing fire, bodily injury, or staining of household items)

■ Check the following before/while operating a unit from outside the home

- If you know that there is someone at home, inform the person when turning the air conditioner on or off from outside the home. (If someone at home is standing on something such as a stool, the air conditioner turning on or off unexpectedly could surprise them and cause them to fall or topple over. Additionally, a sudden change in the indoor/outdoor temperature could harm the health of people at home)
  · The air conditioner can be turned off and temperature adjustment can be made using a remote controller in the home.
  · Do not use the function if the only people at home are persons who are unable to make adjustments to temperature or other settings themselves, such as young children, disabled persons, or elderly persons.
- Regularly check the settings and operating status of the air conditioner. (Sudden changes in indoor/outdoor temperature pose a health hazard. There is a risk of harm to animals and plants)
  If an error occurs during operation, immediately turn off the air conditioner and contact your dealer.
  Double check the display to confirm that the power is off.

Wireless LAN connection

Web site: **https://daikinone.com/ductless**

For instructions on how to connect your unit to wireless LAN and to your Daikin One Home application, please see the website above.

Contains FCC ID: VPYLB1YA
This device complies with part 15 of the FCC Rules. Operation is subject to the following two conditions:
(1) This device may not cause harmful interference, and
(2) This device must accept any interference received, including interference that may cause undesired operation.
FCC CAUTION
Changes or modifications not expressly approved by the party responsible for compliance could void the user's authority to operate the equipment.
This transmitter must not be co-located or operated in conjunction with any other antenna or transmitter.
Contains IC: 772C-LB1YA
This device complies with Industry Canada's applicable licence-exempt RSSs.
Operation is subject to the following two conditions:
(1) This device may not cause interference; and
(2) This device must accept any interference, including interference that may cause undesired operation of the device.
This equipment complies with IC radiation exposure limits set forth for an uncontrolled environment and meets RSS-102 of the IC radio frequency (RF) Exposure rules. This equipment should be installed and operated keeping the radiator at least 7-7/8 inches (20cm) or more away from person's body.
The FCC responsible party is Daikin Comfort Technologies Manufacturing, L.P., and may be contacted by calling (713)-861-2500, or at 19001 Kermier Rd., Waller, TX 77484.
(https://www.northamerica-daikin.com)
This device, which was assembled by Daikin Comfort Technologies Manufacturing, L.P., contains a component that is classified as an intentional radiator.
This intentional radiator has been certified by the FCC: FCC ID VPYLB1YA.
And this intentional radiator has an industry Canada ID: IC 772C-LB1YA.
The manufacturer of the intentional radiator (model no. Type1YA) is Murata Manufacturing co., Ltd (www.murata.com).
This equipment complies with FCC radiation exposure limits set forth for an uncontrolled environment and meets the FCC radio frequency (RF) Exposure Guidelines. This equipment should be installed and operated keeping the radiator at least 7-7/8 inches (20cm) or more away from person's body.
Changes or modifications not expressly approved by the party responsible for compliance could void the user's authority to operate the equipment.
NOTE: This equipment has been tested and found to comply with the limits for a Class B digital device, pursuant to part 15 of the FCC Rules. These limits are designed to provide reasonable protection against harmful interference in a residential installation. This equipment generates, uses and can radiate radio frequency energy and, if not installed and used in accordance with the instructions, may cause harmful interference to radio communications. However, there is no guarantee that interference will not occur in a particular installation. If this equipment does cause harmful interference to radio or television reception, which can be determined by turning the equipment off and on, the user is encouraged to try to correct the interference by one or more of the following measures:
- Reorient or relocate the receiving antenna.
- Increase the separation between the equipment and receiver.
- Connect the equipment into an outlet on a circuit different from that to which the receiver is connected.
- Consult the dealer or an experienced radio/TV technician for help.

Application software installation

For Android Phones

1) Open [Google Play].
2) Search using the application name: [Daikin One Home].
3) Follow the directions on the screen to install.

For iOS Phones

1) Open the [App Store].
2) Search using the application name: [Daikin One Home].
3) Follow the directions on the screen to install.

Attention

- The actual application screen layout and content may differ from what is shown. The layout and content of the application screen is subject to change without notice.

Connect the air conditioner to your home network.

1. While operation is stopped, press POWERFUL and hold the button for 5 seconds.

2. Press TEMP or TEMP and select menu number 3.

- "SP" appears on the LCD.
- "3" blinks.

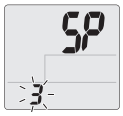



3. Press POWERFUL to connect to the access point.

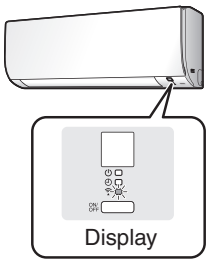

The wireless LAN connection adapter lamp blinks quickly.

4. Press CANCEL to return to the default screen.
No more settings need to be carried out from the remote controller.

5. Open Daikin One Home App and follow the instructions to set up the wireless LAN.

6. When the wireless LAN connection adapter lamp switches from blinking to lit, the connection is complete.

NOTE

- While "SP" is displayed, the options that can be selected using TEMP and TEMP are 1, 3, A, and OFF.
- Perform wireless LAN connection one indoor unit at a time.
- If you are unable to establish a network connection, refer the troubleshooting provided by the Daikin One Home App.
- When the lamp blinks slowly, the connection is not ready. Perform the connection procedure while it blinks quickly.

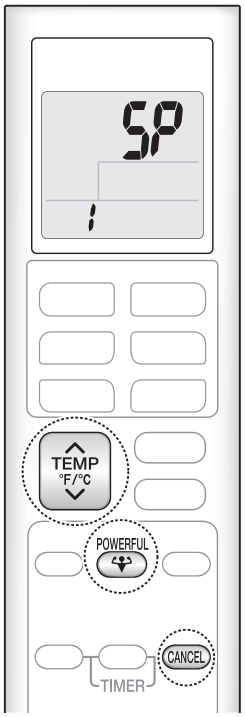

To confirm the wireless LAN connection adapter connection

■ To confirm

1. While operation is stopped, press POWERFUL and hold the button for 5 seconds.

2. Press POWERFUL to confirm the selected setting.

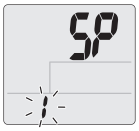

- "SP" appears on the LCD.
- "1" blinks.

Check the indoor unit LED.

Wireless LAN connection adapter lamp	Status
Blinking for 1 second	Connection is not ready
Blinking for 3 seconds	Please initialize the wireless LAN connection adapter
Does not blink or light	Communication is abnormal There is a possibility of equipment failure Please request repair

To turn off the wireless connection

■ To use the remote controller

1. While operation is stopped, press POWERFUL and hold the button for 5 seconds.

2. Press TEMP or TEMP and select menu OFF.



- "SP" appears on the LCD.
- "OFF" blinks, and communication is OFF.

3. Press POWERFUL and hold the button for 2 seconds to confirm selected setting.

- The wireless LAN connection adapter lamp turn off.

4. Press CANCEL to return to the default screen.

To reset the connection setting to the factory default

- If you want to reset the connection settings, it is possible to initialize the wireless LAN connection adapter to its factory default state. If initialized, data including the network settings and power consumption history will be erased.
- When discarding or transferring to another user, initialize the connection adapter to erase the internal data.

■ To reset

1. While operation is stopped, press POWERFUL and hold the button for 5 seconds.

2. Press TEMP or TEMP and select menu A.

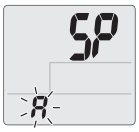

- "SP" appears on the LCD.
- "A" blinks.

3. Press POWERFUL and hold the button for 2 seconds to confirm selected setting.

- The wireless LAN connection adapter lamp blinks for 1 second.

4. Press CANCEL to return to the default screen.

1.14 Other Functions

1.14.1 Hot-Start Function

In order to prevent the cold air blast that normally occurs when heating operation is started, the temperature of the indoor heat exchanger is detected, and the airflow is either stopped or significantly weakened resulting in comfortable heating.

Note(s)

The cold air blast is prevented using similar control when defrost control starts or when the thermostat is turned ON.

1.14.2 Signal Receiving Sign

When the indoor unit receives a signal from the remote controller, the unit emits a signal receiving sound and the operation lamp blinks.

1.14.3 Indoor Unit ON/OFF Switch

ON/OFF switch is provided on the display of the unit.

- Press **ON/OFF** switch once to start operation. Press once again to stop it.
- **ON/OFF** switch is useful when the remote controller is missing or the battery has run out.
- In the case of multi system operation, there are times when the unit does not activate with **ON/OFF** switch.

Operation mode	Temperature setting	Airflow rate
AUTO	25°C (77°F)	Automatic

07/09/12 class

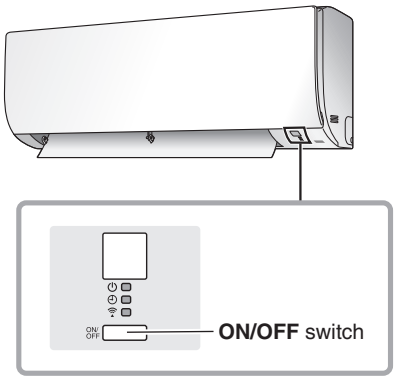

R4004127

15/18/24 class

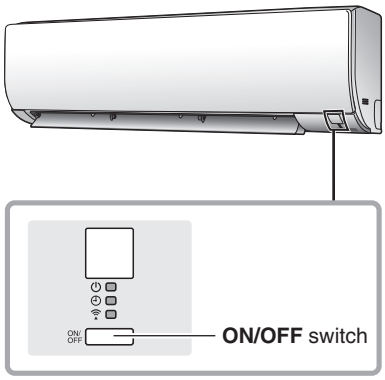

R4004128

1.14.4 Auto-restart Function

If a power failure (even a momentary one) occurs during the operation, the system restarts automatically in the same conditions as before when the power supply is restored to the conditions prior to the power failure.

Note

It takes 3 minutes to restart the operation because 3-minute standby function is activated.

2. Control Specification

2.1 Thermistor Functions

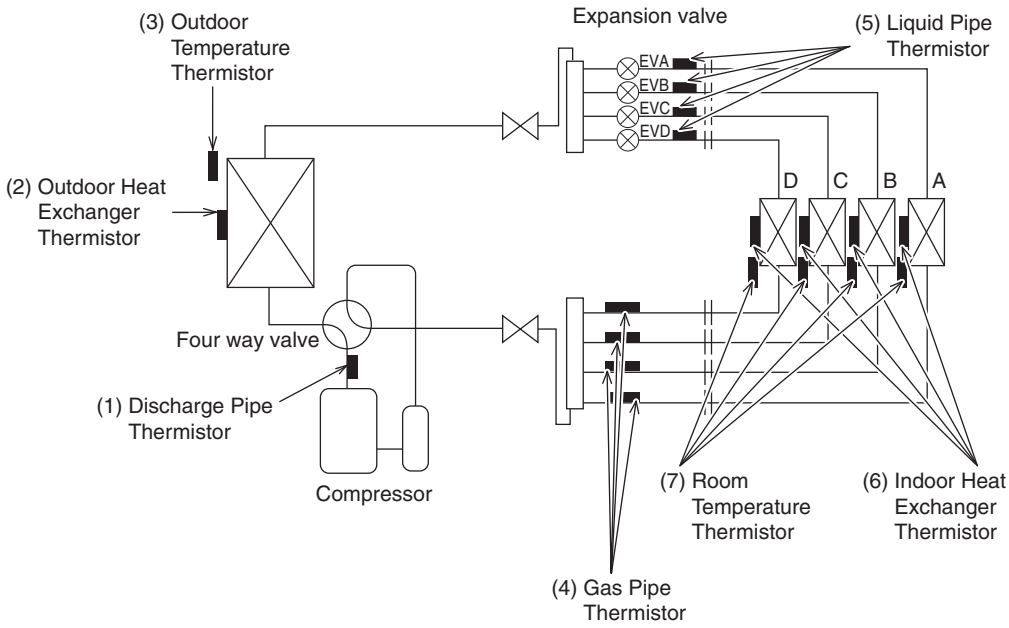

R4004138

The illustration is for the 4-room models as representative and have 4 lines of indoor unit system (A ~ D).
Each system has respective number of lines according to the specified number of the rooms.

(1) Discharge Pipe Thermistor

- The discharge pipe thermistor is used for controlling discharge pipe temperature. If the discharge pipe temperature (used in place of the inner temperature of the compressor) rises abnormally, the operating compressor speed becomes lower or the operation halts.
- The discharge pipe thermistor is used for detecting disconnection of the discharge pipe thermistor.

(2) Outdoor Heat Exchanger Thermistor

- The outdoor heat exchanger thermistor is used for controlling the target discharge pipe temperature. The system sets the target discharge pipe temperature according to the outdoor and indoor heat exchanger temperature, and controls the electronic expansion valve opening so that the target discharge pipe temperature can be obtained.
- In cooling operation, the outdoor heat exchanger thermistor is used for detecting the disconnection of the discharge pipe thermistor. When the discharge pipe temperature drops below the outdoor heat exchanger temperature by more than a certain value, the discharge pipe thermistor is judged as disconnected.
- In cooling operation, the outdoor heat exchanger thermistor is used for high pressure protection.

(3) Outdoor Temperature Thermistor

- The outdoor temperature thermistor detects the outdoor air temperature and is used for refrigerant shortage detection, input current control, outdoor fan control, liquid compression protection function, and so on.

(4) Gas Pipe Thermistor

- In cooling operation, the gas pipe thermistor is used for gas pipe isothermal control. The system controls electronic expansion valve opening so that the gas pipe temperature in each room becomes equal.

(5) Liquid Pipe Thermistor

- Liquid pipe thermistor is used to protect the compressor against liquid attack during cooling operation.
- In case of low outdoor temperature operation, the system compares the indoor heat exchanger temperature with the liquid pipe temperature to detect disturbances in the refrigerant flow. If any, the system adjusts the opening of the electronic expansion valve to control the refrigerant flow.

- When only one indoor unit is in heating operation, the liquid pipe thermistor is used for subcooling control. The actual subcool is calculated with the liquid pipe temperature and the maximum indoor heat exchanger temperature. The system controls the electronic expansion valve openings to obtain the target subcool.
- In heating operation, the liquid pipe thermistor is used for liquid pipe isothermal control. The system controls the electronic expansion valve opening so that the liquid pipe temperatures in each room becomes equal.

(6) Indoor Heat Exchanger Thermistor

- The indoor heat exchanger thermistor is used for controlling the target discharge pipe temperature. The system sets the target discharge pipe temperature according to the outdoor and indoor heat exchanger temperature, and controls the electronic expansion valve opening so that the target discharge pipe temperature can be obtained.
- In cooling operation, the indoor heat exchanger thermistor is used for freeze-up protection control. If the indoor heat exchanger temperature drops abnormally, the operating compressor speed becomes lower or the operation halts.
- In cooling operation, the indoor heat exchanger thermistor is used for anti-icing function. If any of the following conditions are met in the room where operation halts, it is assumed as icing.
  The conditions are
  $Tc \leq -1°C$ (30.2°F)
  $Ta - Tc \geq 10°C$ (18°F)
  where Ta is the room temperature and Tc is the indoor heat exchanger temperature.
- The indoor heat exchanger thermistor is used for wiring error check function. The refrigerant flows in order from the port A to detect the indoor heat exchanger temperature one by one, and then wiring and piping can be checked.
- In heating operation, the indoor heat exchanger thermistor is used for heating peak-cut control. If the indoor heat exchanger temperature rises abnormally, the operating compressor speed becomes lower or the operation halts.
- In heating operation, the indoor heat exchanger thermistor is used for detecting the disconnection of the discharge pipe thermistor. When the discharge pipe temperature drops below the highest indoor heat exchanger temperature by more than a certain value, the discharge pipe thermistor is judged as disconnected.
- Excluding the case that all the indoor units are in heating operation, the indoor heat exchanger thermistor is used for subcooling control. The actual subcool is calculated with the liquid pipe temperature and the indoor heat exchanger temperature. The system controls the electronic expansion valve openings to obtain the target subcool.

(7) Room Temperature Thermistor

- The room temperature thermistor detects the room air temperature and is used for controlling the room air temperature.

2.2 Mode Hierarchy

Outline

The air conditioner control has normal operation mode, forced operation mode, and power transistor test mode for installation and servicing.

Details

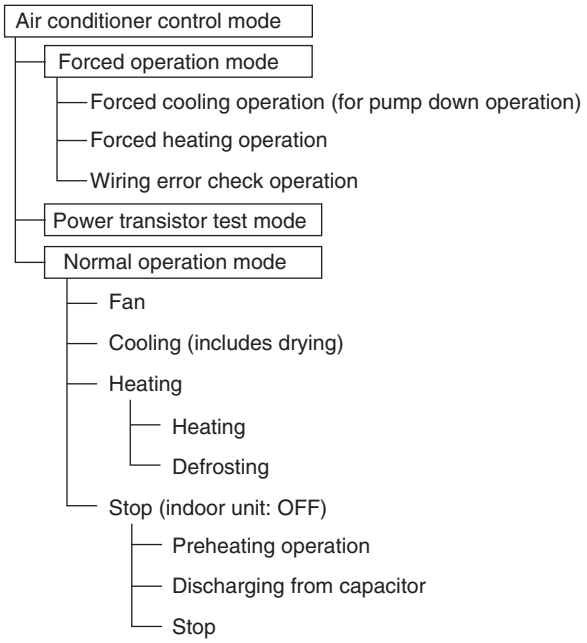

(R17361)

- Unless specified otherwise, dry operation command is regarded as cooling operation.
- Indoor fan operation cannot be made in multiple indoor units. (A forced fan command is made during forced cooling operation.)

Determine Operation Mode

The system judges the operation mode command which is set by each room in accordance with the procedure, and determines the operation mode of the system.
The following procedure is taken when the modes conflict with each other.
∗1. The system follows the mode which is set first. (First-push, first-set)
∗2. For the rooms where the different mode is set, standby mode is activated. (The operation lamp blinks.)

2.3 Compressor Speed Control

Outline

Compressor speed corresponding to each room's capacity is determined according to the difference between the target temperature and the temperature of each room.

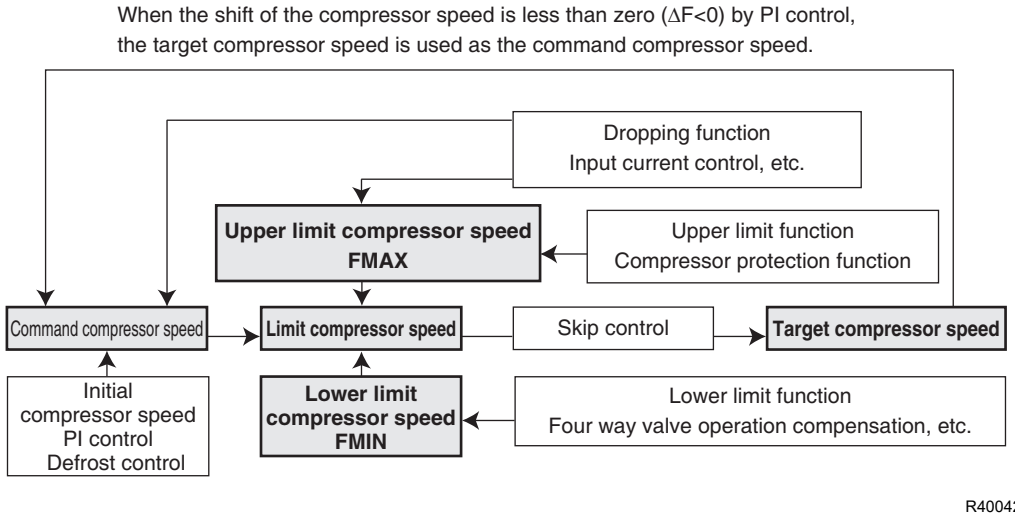

R4004268

Details

The compressor speed is determined by taking the following steps.

1. **Determine command compressor speed**
   Command compressor speed is determined in the following order of priority.
   (1) Limiting defrost control time
   (2) Forced cooling/heating
   (3) Indoor compressor speed command

2. **Determine upper limit compressor speed**
   The minimum value is set as the upper limit compressor speed among the compressor speed upper limits of the following functions:
   Compressor protection, input current, discharge pipe temperature, low compressor speed high pressure limit, heating peak-cut, freeze-up protection, defrost.

3. **Determine lower limit compressor speed**
   The maximum value is set as the lower limit compressor speed among the compressor speed lower limits of the following function:
   Four way valve operation compensation, draft prevention, pressure difference upkeep.

4. **Determine prohibited compressor speed**
   There is a certain prohibited compressor speed such as a power supply compressor speed.

Parameters

Q value
Indoor unit output determined from indoor unit volume, airflow rate and other factors.

S value: Indoor Unit Capacity
S value is the capacity of the indoor unit, and is used for compressor speed command.
Ex:

Capacity	S value	Capacity	S value
7 kBtu/h	20	15 kBtu/h	50
9 kBtu/h	25	18 kBtu/h	60
12 kBtu/h	35	24 kBtu/h	71

∆D signal: Indoor compressor speed command

The difference between the room thermistor temperature and the target temperature is taken as the ∆D value and is used for ∆D signal of compressor speed command.

Temperature difference	∆D signal	Temperature difference	∆D signal	Temperature difference	∆D signal	Temperature difference	∆D signal
–1.0°C (–1.8°F)	∗OFF	0°C (0°F)	4	2.0°C (3.6°F)	8	4.0°C (7.2°F)	12
–0.75°C (–1.4°F)	1	0.5°C (0.9°F)	5	2.5°C (4.5°F)	9	4.5°C (8.1°F)	13
–0.5°C (–0.9°F)	2	1.0°C (1.8°F)	6	3.0°C (5.4°F)	10	5.0°C (9.0°F)	14
–0.25°C (–0.5°F)	3	1.5°C (2.7°F)	7	3.5°C (6.3°F)	11	5.5°C (9.9°F)	15

Values depend on the type of indoor unit.

∗ OFF = Thermostat OFF

Initial Compressor Speed

When starting the compressor, or when conditions are varied due to a change of operating rooms, the compressor speed must be initialized according to a total of the maximum ∆D value of each room and a total Q value (ΣQ) of the operating room (the room in which the thermostat is set to ON).

PI Control

1. **P control**
   MaxΔD value is calculated in each sampling time (15 seconds), and the compressor speed is adjusted according to its difference from the compressor speed previously calculated.

2. **I control**
   If the operating compressor speed does not change for more than a certain fixed time, the compressor speed is adjusted according to maxΔD value.
   When maxΔD value is low, the compressor speed is lowered.
   When maxΔD value is high, the compressor speed is increased.

3. **Compressor speed control when other controls are functioning**
   - When compressor speed is dropping:
     Compressor speed control is carried out only when the compressor speed drops.
   - For limiting lower limit:
     Compressor speed control is carried out only when the compressor speed rises.

4. **Upper and lower limit of compressor speed by PI control**
   The compressor speed upper and lower limits are set according to the total of S values.
   When the indoor unit quiet operation commands come from all the rooms or when the outdoor unit quiet operation commands come from all the rooms, the upper limit compressor speed is lower than the usual setting.

2.4 Controls at Mode Changing/Start-up

2.4.1 Preheating Control

Outline

The inverter operation in open phase starts with the conditions of the outdoor temperature and the preheating command from the indoor unit.

Details

ON Condition

- When the outdoor temperature is below **A**, the inverter operation in open phase starts.

OFF Condition

- When the outdoor temperature is higher than **B**, the inverter operation in open phase stops.

	2/3/4MXM 2MXT(H)		5MXM 3/4/5MXT(H)	
	°C	°F	°C	°F
A	5	41	20	68
B	7	44.6	21.5	70.7

2.4.2 Four Way Valve Switching

Outline

The four way valve coil is energized/not energized depending on the operation mode (Heating: ON, Cooling/Dry/Defrost: OFF).
In order to eliminate the switching sound as the four way valve coil switches from ON to OFF when the heating is stopped, the OFF delay switch of the four way valve is carried out.

Details

OFF delay switch of four way valve

The four way valve coil is energized for 150 seconds after the operation is stopped.

2.4.3 Four Way Valve Operation Compensation

Outline

At the beginning of operation as the four way valve is switched, the pressure difference to activate the four way valve is acquired when the output compressor speed is higher than a certain fixed compressor speed, for a certain fixed time.

Details

Starting Conditions

- The compressor starts and the four way valve switches from OFF to ON
- The four way valve switches from ON to OFF during operation
- The compressor starts after resetting
- The compressor starts after the fault of four way valve switching

The lower limit of compressor speed keeps **A** rps for 70 seconds for any of the conditions above.

		2MXM	3/4MXM	2MXT(H)	5MXM	3/4/5MXT(H)
A (rps)	Cooling	48	27	27	32	32
	Heating	48	27	27	26	26

2.4.4 3-Minute Standby

Turning on the compressor is prohibited for 3 minutes after turning off.
The function is not used when defrosting.

2.4.5 Compressor Protection Function

When turning the compressor from OFF to ON, the upper limit of compressor speed is set as follows.
The function is not used when defrosting.

■ **2/3/4MXM, 2MXT(H)**

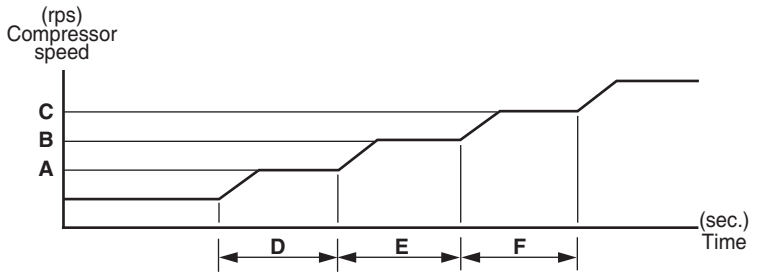

R4004139

	2MXM	3/4MXM	2MXT(H)
A (rps)	55	35	35
B (rps)	70	65	65
C (rps)	85	80	80
D (seconds)	150	100	100
E (seconds)	180	500	500
F (seconds)	300	200	200

■ **5MXM, 3/4/5MXT(H)**

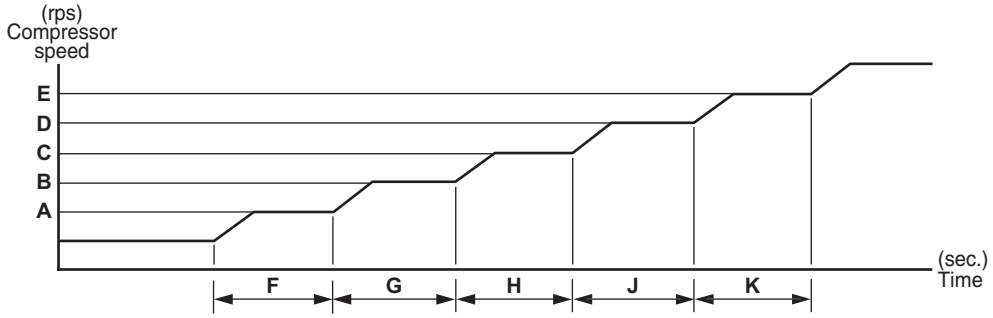

R4004266

	5MXM, 3/4/5MXT(H)	
	Cooling	Heating
A (rps)	35	23 ~ 52
B (rps)	48	30 ~ 48
C (rps)	65	48 ~ 65
D (rps)	83	65 ~ 83
E (rps)	95	83 ~ 95
F (seconds)	120	40 ~ 120
G (seconds)	270 ~ 420	240 ~ 420
H (seconds)	290 ~ 450	180 ~ 450
J (seconds)	170 ~ 250	170 ~ 450
K (seconds)	150 ~ 220	150 ~ 220

2.5 Discharge Pipe Temperature Control

Outline

The discharge pipe temperature is used as the internal temperature of the compressor. If the discharge pipe temperature rises above a certain level, the upper limit of compressor speed is set to keep the discharge pipe temperature from rising further.

Details

Zone	Control
Stop zone	When the temperature reaches the stop zone, the compressor stops.
Dropping zone	The upper limit of compressor speed decreases.
Keep zone	The upper limit of compressor speed is kept.
Reset zone	The upper limit of compressor speed is canceled.

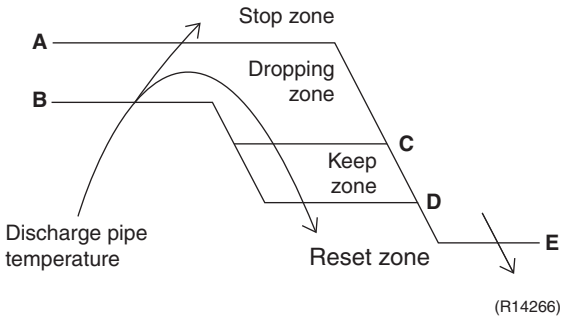

	°C	°F
A	120	248
B	111	231.8
C	109	228.2
D	107	224.6
E	107	224.6

2.6 Input Current Control

Outline

The microcomputer calculates the input current while the compressor is running, and sets the compressor speed upper limit based on the input current.
In case of heat pump models, this control is the upper limit control of the compressor speed and takes priority over the lower limit control of four way valve operation compensation.

Details

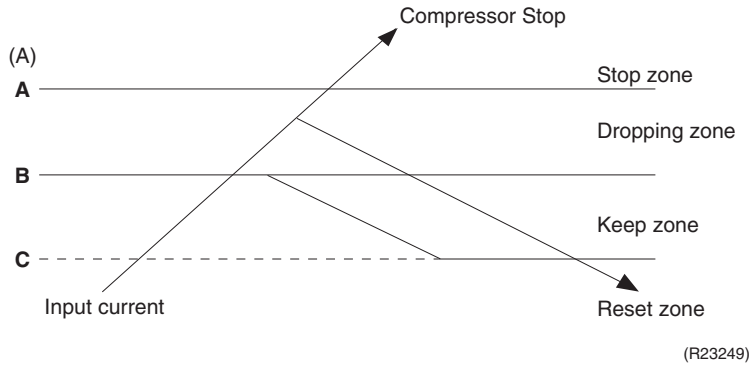

Compressor speed control in each zone

Stop zone

- After the input current remains in the stop zone for 2.5 seconds, the compressor is stopped.

Dropping zone

- The upper limit of the compressor speed is defined as operation compressor speed – 2 rps.
- After this, the output compressor speed is lowered by 2 rps every second until it reaches the keep zone.

Keep zone

- The present maximum compressor speed goes on.

Reset zone

- Limit of the compressor speed is canceled.

	2MXM		3MXM		4MXM		5MXM	
	Cooling	Heating	Cooling	Heating	Cooling	Heating	Cooling	Heating
A (A)	13.0	15.0	19.0	19.0	19.0	19.5	27.5	29.0
B (A)	11.5	14.0	16.0	17.0	17.0	18.5	25.5	27.0
C (A)	10.5	13.0	15.0	16.0	16.0	17.5	24.5	26.0

	2MXT(H)		3MXT(H)		4MXT(H)		5MXT(H)	
	Cooling	Heating	Cooling	Heating	Cooling	Heating	Cooling	Heating
A (A)	19.0	19.0	27.0	27.0	27.5	29.0	27.5	29.0
B (A)	14.0	17.0	25.0	25.0	25.5	27.0	25.5	27.0
C (A)	13.0	16.0	24.0	24.0	24.5	26.0	24.5	26.0

Limitation of current dropping and stop value according to the outdoor temperature

- The current drops when outdoor temperature becomes higher than a certain level (depending on the model).

2.7 Freeze-up Protection Control

Outline

During cooling operation, the signal sent from the indoor unit determines the compressor speed upper limit and prevents freezing of the indoor heat exchanger. The signals from the indoor unit are divided into zones.

Details

The operating compressor speed limitation is judged with the indoor heat exchanger temperature.

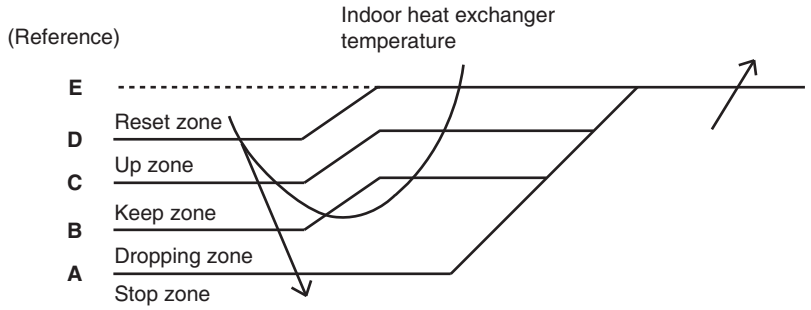

R4003891

	°C	°F
A	0	32
B	3	37.4
C	3.5	38.3
D	4	39.2
E	13	55.4

2.8 Heating Peak-cut Control

Outline

During heating operation, the indoor heat exchanger temperature determines the compressor speed upper limit to prevent abnormal high pressure.

Details

- The operating compressor speed is judged with the indoor heat exchanger temperature 2 minutes after the operation starts and **F** seconds after the number of the rooms in operation is changed.
- The maximum value of the indoor heat exchanger temperature controls the following (excluding the rooms not in operation).

Zone	Control
Stop zone	When the temperature reaches the stop zone, the compressor stops.
Dropping zone	The upper limit of compressor speed decreases.
Keep zone	The upper limit of compressor speed is kept.
Up zone	The upper limit of compressor speed increases.
Reset zone	The upper limit of compressor speed is canceled.

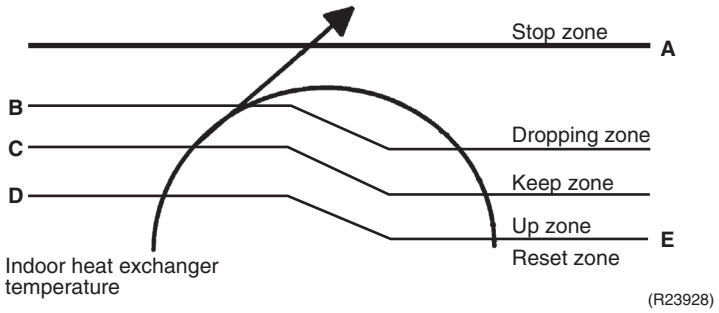

	2/3/4MXM 2MXT(H)		5MXM 3/4/5MXT(H)	
	°C	°F	°C	°F
A	59	138.2	59	138.2
B	55	131	54	129.2
C	54	129.2	53	127.4
D	52	125.6	51	123.8
E	50	122	49	120.2

		All outdoor units
F (seconds)	When increasing	30
	When decreasing	2

2.9 High Pressure Protection Control

Outline

In order to prevent abnormal high pressures in the system and hence avoiding activation of the high pressure safety device the below control function will be activated.

Details

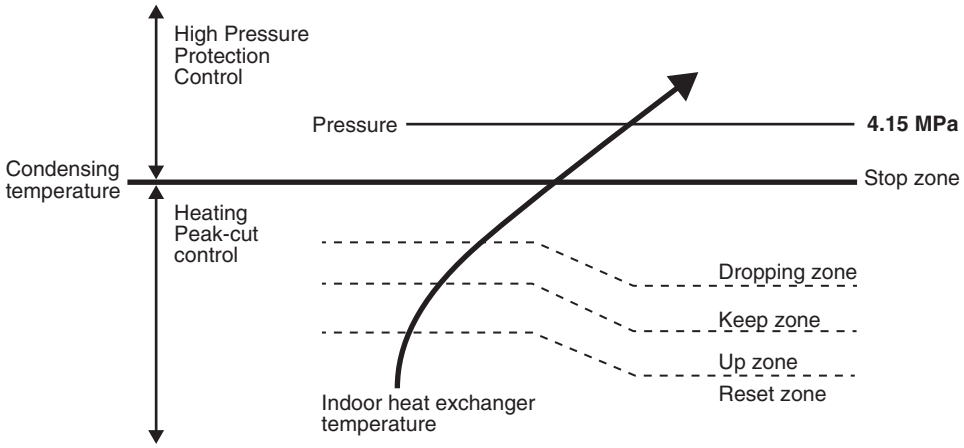

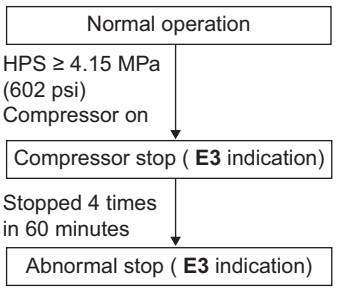

2.10 Outdoor Fan Control

1. **Fan OFF control during defrosting**
   The outdoor fan is turned OFF while defrosting.

2. **Fan OFF delay when stopped**
   The outdoor fan is turned OFF 60 seconds after the compressor stops.

3. **Fan speed control for pressure difference upkeep**
   The rotation speed of the outdoor fan is controlled for keeping the pressure difference during cooling operation with low outdoor temperature.
   - When the pressure difference is low, the rotation speed of the outdoor fan is reduced.
   - When the pressure difference is high, the rotation speed of the outdoor fan is controlled as well as normal operation.

4. **Fan control when the number of heating room decreases**
   When the outdoor temperature is more than 10°C (50°F), the fan is turned off for 30 seconds.

5. **Fan speed control during forced cooling operation**
   The outdoor fan is controlled as well as normal operation during forced cooling operation.

6. **Fan speed control for POWERFUL operation**
   The rotation speed of the outdoor fan is increased during POWERFUL operation.

7. **Fan speed control during indoor/outdoor unit quiet operation**
   The rotation speed of the outdoor fan is reduced by the command of the indoor/outdoor unit quiet operation.

8. **Fan ON/OFF control when operation (cooling, heating, dry) starts/stops**
   The outdoor fan is turned ON when the operation starts. The outdoor fan is turned OFF when the operation stops.

2.11 Liquid Compression Protection Function

Outline

The compressor stops according to the outdoor temperature for protection.

Details

Operation stops depending on the outdoor temperature.
The compressor turns off under the conditions that the system is in cooling operation and the outdoor temperature is below –12°C (10.4°F).

2.12 Defrost Control

Outline

Defrosting is carried out by the cooling cycle (reverse cycle). The defrosting time or outdoor heat exchanger temperature must be more than a certain value to finish defrosting.

Details

Conditions for Starting Defrost

- The starting conditions are determined with the outdoor temperature and the outdoor heat
- exchanger temperature. (For details, refer to the table on the follow pages. (P. 64, 65, 66))
- The system is in heating operation.
- The compressor operates for 6 minutes.
- More than **A** minutes of accumulated time have passed after the start of the operation or ending the previous defrosting.
- Furthermore, even if the above conditions are not met, if heating operation accumulates for approximately **S** hours under conditions where the outdoor temperature is below **T** °C and the outdoor heat exchanger temperature is below **U** °C, the system starts defrosting.

Conditions for Canceling Defrost

The judgment is made with the outdoor heat exchanger temperature. (**B**°C (**C**°F))

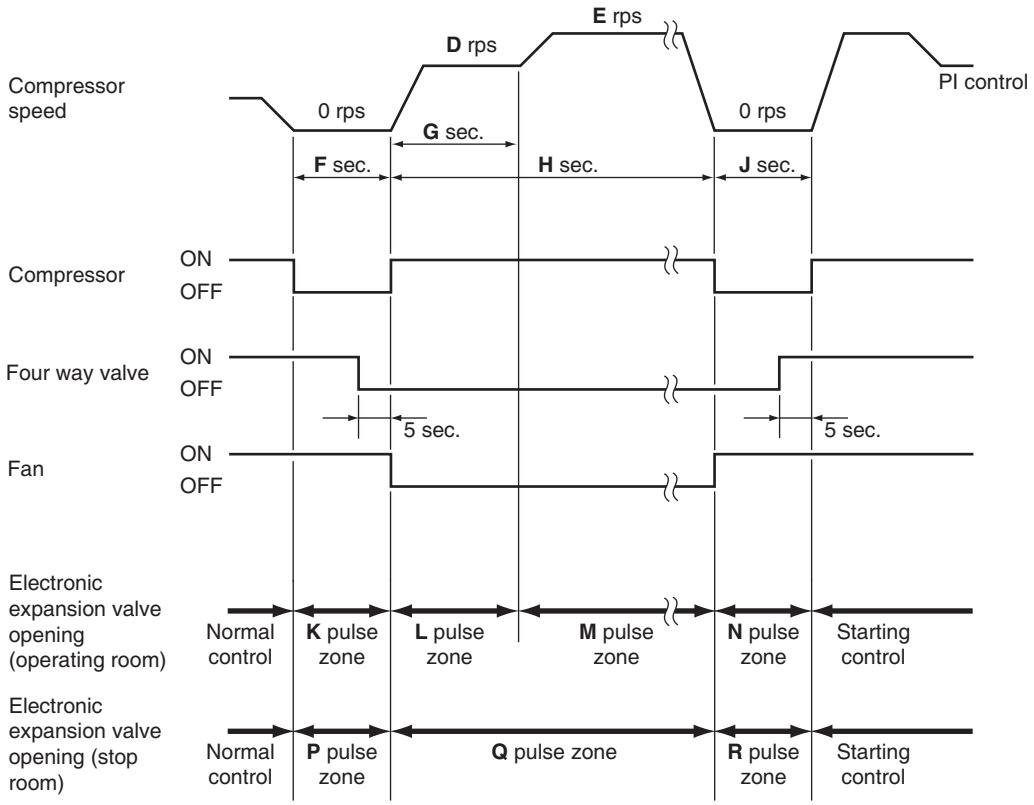

R4004140

	2MXM	3/4MXM	5MXM	2MXT(H)	3/4/5MXT(H)
A (minutes)	33	26	30	26	30
B (°C)	4 ~ 12	4 ~ 12	4 ~ 12	4 ~ 12	4 ~ 12
C (°F)	39.2 ~ 53.6	39.2 ~ 53.6	39.2 ~ 53.6	39.2 ~ 53.6	39.2 ~ 53.6
D (rps)	54	39	45	39	45
E (rps)	79	63	72	63	72
F (seconds)	90	60	60	60	60
G (seconds)	120	120	120	120	120
H (seconds)	530	530	530	530	530
J (seconds)	60	60	60	60	60
K (pulse)	480	480	480	480	480
L (pulse)	250	400	480	400	480
M (pulse)	300	400	480	400	480
N (pulse)	300	400	480	400	480
P (pulse)	160	160	240	160	240
Q (pulse)	50	50	190	50	190
R (pulse)	50	0	240	0	240
S (hours)	6	6	12	6	12
T (°C)	0	0	2	0	2
U (°C)	0	0	0	0	0

2MXM

Outdoor heat exchanger temperature of Defrost **IN**

Compressor speed [rps]	Outdoor temperature (°F)					
	5.0	14.0	19.4	32.0	35.6	44.6
6	3.5	10.1	14.1	23.3	26.0	28.4
8	3.3	9.9	13.9	23.1	25.8	28.4
10	3.1	9.7	13.7	22.9	25.6	28.4
12	2.9	9.5	13.5	22.7	25.4	28.4
14	2.7	9.3	13.3	22.5	25.2	28.4
16	2.5	9.1	13.1	22.3	25.0	28.4
18	2.3	8.9	12.9	22.1	24.8	28.4
20	2.1	8.7	12.7	21.9	24.6	28.4
22	1.9	8.5	12.5	21.7	24.4	28.4
24	1.7	8.3	12.3	21.5	24.2	28.4
26	1.5	8.1	12.1	21.3	24.0	28.4
28	1.3	7.9	11.9	21.1	23.8	28.4
30	1.1	7.7	11.7	20.9	23.6	28.4
32	0.9	7.5	11.5	20.8	23.4	28.4
34	0.7	7.3	11.3	20.6	23.2	28.4
36	0.5	7.1	11.1	20.4	23.0	28.4
38	0.3	6.9	10.9	20.2	22.8	28.4
40	0.1	6.7	10.7	20.0	22.6	28.4
42	–0.1	6.5	10.5	19.8	22.4	28.4
44	–0.3	6.4	10.3	19.6	22.2	28.4
46	–0.5	6.2	10.1	19.4	22.0	28.4
48	–0.7	6.0	9.9	19.2	21.8	28.4
50	–0.9	5.8	9.7	19.0	21.6	28.2
52	–1.0	5.6	9.5	18.8	21.4	28.0
54	–1.2	5.4	9.3	18.6	21.2	27.8
56	–1.4	5.2	9.1	18.4	21.0	27.6
58	–1.6	5.0	8.9	18.2	20.8	27.4
60	–1.8	4.8	8.7	18.0	20.6	27.2
62	–2.0	4.6	8.5	17.8	20.4	27.1
64	–2.2	4.4	8.3	17.6	20.2	26.9
66	–2.4	4.2	8.2	17.4	20.0	26.7
68	–2.6	4.0	8.0	17.2	19.9	26.5
70	–2.8	3.8	7.8	17.0	19.7	26.3
72	–3.0	3.6	7.6	16.8	19.5	26.1
74	–3.2	3.4	7.4	16.6	19.3	25.9
76	–3.4	3.2	7.2	16.4	19.1	25.7
78	–3.6	3.0	7.0	16.2	18.9	25.5
80	–3.8	2.8	6.8	16.0	18.7	25.3
82	–4.0	2.6	6.6	15.8	18.5	25.1
84	–4.2	2.4	6.4	15.6	18.3	24.9
86	–4.4	2.2	6.2	15.4	18.1	24.7
88	–4.6	2.0	6.0	15.2	17.9	24.5
90	–4.8	1.8	5.8	15.0	17.7	24.3
92	–5.0	1.6	5.6	14.8	17.5	24.1
94	–5.2	1.4	5.4	14.6	17.3	23.9
96	–5.4	1.2	5.2	14.5	17.1	23.7
98	–5.6	1.0	5.0	14.3	16.9	23.5
100	–5.8	0.8	4.8	14.1	16.7	23.3
102	–6.0	0.6	4.6	13.9	16.5	23.1
104	–6.2	0.4	4.4	13.7	16.3	22.9
106	–6.4	0.2	4.2	13.5	16.1	22.7
108	–6.6	0.1	4.0	13.3	15.9	22.5
110	–6.8	–0.1	3.8	13.1	15.7	22.3
112	–7.0	–0.3	3.6	12.9	15.5	22.1
114	–7.2	–0.5	3.4	12.7	15.3	21.9

Outdoor heat exchanger temperature of Defrost **OUT**

Outdoor temperature (°F)	Outdoor heat exchanger temperature (°F)
44.6	48.3
42.8	49.6
41.0	50.9
39.2	52.1
37.4	53.4
35.6	53.6
33.8	53.6
32.0	53.6
30.2	53.6
28.4	53.6
26.6	53.6
24.8	53.6
23.0	53.6
21.2	53.6
19.4	53.6
17.6	53.6
15.8	53.6
14.0	53.6
12.2	53.6
10.4	53.6
8.6	53.6
6.8	53.6
5.0	53.6

2MXT(H)

Outdoor heat exchanger temperature of Defrost **IN**

Compressor speed [rps]	Outdoor temperature (°F)							
	–13.0	–11.2	–3.1	14.0	19.4	32.0	35.6	44.6
6	–10.2	–8.9	–2.9	9.6	13.6	22.8	25.5	28.4
8	–10.6	–9.2	–3.3	9.3	13.2	22.5	25.1	28.4
10	–10.9	–9.6	–3.6	8.9	12.9	22.1	24.8	28.4
12	–11.3	–9.9	–4.0	8.6	12.5	21.8	24.4	28.4
14	–11.6	–10.3	–4.3	8.2	12.2	21.4	24.1	28.4
16	–12.0	–10.6	–4.7	7.9	11.8	21.1	23.7	28.4
18	–12.3	–11.0	–5.0	7.5	11.5	20.7	23.4	28.4
20	–12.7	–11.3	–5.4	7.2	11.1	20.4	23.0	28.4
22	–13.0	–11.7	–5.7	6.8	10.8	20.0	22.7	28.4
24	–13.4	–12.0	–6.1	6.5	10.4	19.7	22.3	28.4
26	–13.7	–12.4	–6.4	6.1	10.1	19.3	22.0	28.4
28	–14.1	–12.7	–6.8	5.8	9.7	19.0	21.6	28.2
30	–14.4	–13.1	–7.2	5.4	9.4	18.6	21.3	27.9
32	–14.8	–13.5	–7.5	5.1	9.0	18.3	20.9	27.5
34	–15.1	–13.8	–7.9	4.7	8.7	17.9	20.6	27.2
36	–15.5	–14.2	–8.2	4.4	8.3	17.6	20.2	26.8
38	–15.8	–14.5	–8.6	4.0	8.0	17.2	19.9	26.5
40	–16.2	–14.9	–8.9	3.7	7.6	16.9	19.5	26.1
42	–16.5	–15.2	–9.3	3.3	7.3	16.5	19.2	25.8
44	–16.9	–15.6	–9.6	2.9	6.9	16.2	18.8	25.4
46	–17.2	–15.9	–10.0	2.6	6.6	15.8	18.5	25.1
48	–17.6	–16.3	–10.3	2.2	6.2	15.5	18.1	24.7
50	–17.9	–16.6	–10.7	1.9	5.9	15.1	17.8	24.4
52	–18.3	–17.0	–11.0	1.5	5.5	14.8	17.4	24.0
54	–18.6	–17.3	–11.4	1.2	5.2	14.4	17.1	23.7
56	–19.0	–17.7	–11.7	0.8	4.8	14.1	16.7	23.3
58	–19.3	–18.0	–12.1	0.5	4.5	13.7	16.3	23.0
60	–19.7	–18.4	–12.4	0.1	4.1	13.4	16.0	22.6
62	–20.0	–18.7	–12.8	–0.2	3.7	13.0	15.6	22.3
64	–20.4	–19.1	–13.1	–0.6	3.4	12.7	15.3	21.9
66	–20.7	–19.4	–13.5	–0.9	3.0	12.3	14.9	21.6
68	–21.1	–19.8	–13.8	–1.3	2.7	11.9	14.6	21.2
70	–21.5	–20.1	–14.2	–1.6	2.3	11.6	14.2	20.8
72	–21.8	–20.5	–14.5	–2.0	2.0	11.2	13.9	20.5
74	–22.0	–20.8	–14.9	–2.3	1.6	10.9	13.5	20.1
76	–22.0	–21.2	–15.2	–2.7	1.3	10.5	13.2	19.8
78	–22.0	–21.5	–15.6	–3.0	0.9	10.2	12.8	19.4
80	–22.0	–21.9	–15.9	–3.4	0.6	9.8	12.5	19.1
82	–22.0	–22.0	–16.3	–3.7	0.2	9.5	12.1	18.7
84	–22.0	–22.0	–16.6	–4.1	–0.1	9.1	11.8	18.4
86	–22.0	–22.0	–17.0	–4.4	–0.5	8.8	11.4	18.0
88	–22.0	–22.0	–17.3	–4.8	–0.8	8.4	11.1	17.7
90	–22.0	–22.0	–17.7	–5.1	–1.2	8.1	10.7	17.3
92	–22.0	–22.0	–18.0	–5.5	–1.5	7.7	10.4	17.0
94	–22.0	–22.0	–18.4	–5.8	–1.9	7.4	10.0	16.6
96	–22.0	–22.0	–18.8	–6.2	–2.2	7.0	9.7	16.3
98	–22.0	–22.0	–19.1	–6.5	–2.6	6.7	9.3	15.9
100	–22.0	–22.0	–19.5	–6.9	–2.9	6.3	9.0	15.6
102	–22.0	–22.0	–19.8	–7.2	–3.3	6.0	8.6	15.2
104	–22.0	–22.0	–20.2	–7.6	–3.6	5.6	8.3	14.9
106	–22.0	–22.0	–20.5	–8.0	–4.0	5.3	7.9	14.5
108	–22.0	–22.0	–20.9	–8.3	–4.3	4.9	7.6	14.2
110	–22.0	–22.0	–21.2	–8.7	–4.7	4.6	7.2	13.8
112	–22.0	–22.0	–21.6	–9.0	–5.0	4.2	6.9	13.5
114	–22.0	–22.0	–21.9	–9.4	–5.4	3.9	6.5	13.1

Outdoor heat exchanger temperature of Defrost **OUT**

Outdoor temperature (°F)	Outdoor heat exchanger temperature (°F)
44.6	48.3
42.8	49.6
41.0	50.9
39.2	52.1
37.4	53.4
35.6	53.6
33.8	53.6
32.0	53.6
30.2	53.6
28.4	53.6
26.6	53.6
24.8	53.6
23.0	53.6
21.2	53.6
19.4	53.6
17.6	53.6
15.8	53.6
14.0	53.6
12.2	53.6
10.4	53.6
8.6	53.6
6.8	53.6
5.0	53.6
3.2	53.6
1.4	53.6
–0.4	53.6
–2.2	53.6
–4.0	53.6
–5.8	53.6
–7.6	53.6
–9.4	53.6
–11.2	53.6
–13.0	53.6

3/4MXM

Outdoor heat exchanger temperature of Defrost **IN**

Compressor speed [rps]	Outdoor temperature (°F)					
	5.0	14.0	19.4	32.0	35.6	44.6
6	3.0	9.6	13.6	22.8	25.5	28.4
8	2.7	9.3	13.2	22.5	25.1	28.4
10	2.3	8.9	12.9	22.1	24.8	28.4
12	2.0	8.6	12.5	21.8	24.4	28.4
14	1.6	8.2	12.2	21.4	24.1	28.4
16	1.3	7.9	11.8	21.1	23.7	28.4
18	0.9	7.5	11.5	20.7	23.4	28.4
20	0.6	7.2	11.1	20.4	23.0	28.4
22	0.2	6.8	10.8	20.0	22.7	28.4
24	–0.1	6.5	10.4	19.7	22.3	28.4
26	–0.5	6.1	10.1	19.3	22.0	28.4
28	–0.9	5.8	9.7	19.0	21.6	28.2
30	–1.2	5.4	9.4	18.6	21.3	27.9
32	–1.6	5.1	9.0	18.3	20.9	27.5
34	–1.9	4.7	8.7	17.9	20.6	27.2
36	–2.3	4.4	8.3	17.6	20.2	26.8
38	–2.6	4.0	8.0	17.2	19.9	26.5
40	–3.0	3.7	7.6	16.9	19.5	26.1
42	–3.3	3.3	7.3	16.5	19.2	25.8
44	–3.7	2.9	6.9	16.2	18.8	25.4
46	–4.0	2.6	6.6	15.8	18.5	25.1
48	–4.4	2.2	6.2	15.5	18.1	24.7
50	–4.7	1.9	5.9	15.1	17.8	24.4
52	–5.1	1.5	5.5	14.8	17.4	24.0
54	–5.4	1.2	5.2	14.4	17.1	23.7
56	–5.8	0.8	4.8	14.1	16.7	23.3
58	–6.1	0.5	4.5	13.7	16.3	23.0
60	–6.5	0.1	4.1	13.4	16.0	22.6
62	–6.8	–0.2	3.7	13.0	15.6	22.3
64	–7.2	–0.6	3.4	12.7	15.3	21.9
66	–7.5	–0.9	3.0	12.3	14.9	21.6
68	–7.9	–1.3	2.7	11.9	14.6	21.2
70	–8.2	–1.6	2.3	11.6	14.2	20.8
72	–8.6	–2.0	2.0	11.2	13.9	20.5
74	–8.9	–2.3	1.6	10.9	13.5	20.1
76	–9.3	–2.7	1.3	10.5	13.2	19.8
78	–9.6	–3.0	0.9	10.2	12.8	19.4
80	–10.0	–3.4	0.6	9.8	12.5	19.1
82	–10.3	–3.7	0.2	9.5	12.1	18.7
84	–10.7	–4.1	–0.1	9.1	11.8	18.4
86	–11.0	–4.4	–0.5	8.8	11.4	18.0
88	–11.4	–4.8	–0.8	8.4	11.1	17.7
90	–11.7	–5.1	–1.2	8.1	10.7	17.3
92	–12.1	–5.5	–1.5	7.7	10.4	17.0
94	–12.5	–5.8	–1.9	7.4	10.0	16.6
96	–12.8	–6.2	–2.2	7.0	9.7	16.3
98	–13.2	–6.5	–2.6	6.7	9.3	15.9
100	–13.5	–6.9	–2.9	6.3	9.0	15.6
102	–13.9	–7.2	–3.3	6.0	8.6	15.2
104	–14.2	–7.6	–3.6	5.6	8.3	14.9
106	–14.6	–8.0	–4.0	5.3	7.9	14.5
108	–14.9	–8.3	–4.3	4.9	7.6	14.2
110	–15.3	–8.7	–4.7	4.6	7.2	13.8
112	–15.6	–9.0	–5.0	4.2	6.9	13.5
114	–16.0	–9.4	–5.4	3.9	6.5	13.1

Outdoor heat exchanger temperature of Defrost **OUT**

Outdoor temperature (°F)	Outdoor heat exchanger temperature (°F)
44.6	48.3
42.8	49.6
41.0	50.9
39.2	52.1
37.4	53.4
35.6	53.6
33.8	53.6
32.0	53.6
30.2	53.6
28.4	53.6
26.6	53.6
24.8	53.6
23.0	53.6
21.2	53.6
19.4	53.6
17.6	53.6
15.8	53.6
14.0	53.6
12.2	53.6
10.4	53.6
8.6	53.6
6.8	53.6
5.0	53.6

5MXM

Outdoor heat exchanger temperature of Defrost **IN**

Compressor speed [rps]	Outdoor temperature (°F)					
	5.0	14.0	19.4	32.0	35.6	44.6
6	4.6	12.4	17.0	27.9	28.4	28.4
8	4.5	12.2	16.8	27.7	28.4	28.4
10	4.3	12.0	16.7	27.5	28.4	28.4
12	4.1	11.8	16.5	27.3	28.4	28.4
14	3.9	11.7	16.3	27.1	28.4	28.4
16	3.7	11.5	16.1	26.9	28.4	28.4
18	3.6	11.3	15.9	26.8	28.4	28.4
20	3.4	11.1	15.7	26.6	28.4	28.4
22	3.2	10.9	15.6	26.4	28.4	28.4
24	3.0	10.7	15.4	26.2	28.4	28.4
26	2.8	10.6	15.2	26.0	28.4	28.4
28	2.6	10.4	15.0	25.8	28.4	28.4
30	2.5	10.2	14.8	25.7	28.4	28.4
32	2.3	10.0	14.6	25.5	28.2	28.4
34	2.1	9.8	14.5	25.3	28.0	28.4
36	1.9	9.6	14.3	25.1	27.9	28.4
38	1.7	9.5	14.1	24.9	27.7	28.4
40	1.5	9.3	13.9	24.7	27.5	28.4
42	1.4	9.1	13.7	24.6	27.3	28.4
44	1.2	8.9	13.6	24.4	27.1	28.4
46	1.0	8.7	13.4	24.2	27.0	28.4
48	0.8	8.5	13.2	24.0	26.8	28.4
50	0.6	8.4	13.0	23.8	26.6	28.4
52	0.4	8.2	12.8	23.6	26.4	28.4
54	0.3	8.0	12.6	23.5	26.2	28.4
56	0.1	7.8	12.5	23.3	26.0	28.4
58	–0.1	7.6	12.3	23.1	25.9	28.4
60	–0.3	7.4	12.1	22.9	25.7	28.4
62	–0.5	7.3	11.9	22.7	25.5	28.4
64	–0.7	7.1	11.7	22.6	25.3	28.4
66	–0.8	6.9	11.5	22.4	25.1	28.4
68	–1.0	6.7	11.4	22.2	24.9	28.4
70	–1.2	6.5	11.2	22.0	24.8	28.4
72	–1.4	6.4	11.0	21.8	24.6	28.4
74	–1.6	6.2	10.8	21.6	24.4	28.4
76	–1.8	6.0	10.6	21.5	24.2	28.4
78	–1.9	5.8	10.4	21.3	24.0	28.4
80	–2.1	5.6	10.3	21.1	23.8	28.4
82	–2.3	5.4	10.1	20.9	23.7	28.4
84	–2.5	5.3	9.9	20.7	23.5	28.4
86	–2.7	5.1	9.7	20.5	23.3	28.4
88	–2.8	4.9	9.5	20.4	23.1	28.4
90	–3.0	4.7	9.3	20.2	22.9	28.4
92	–3.2	4.5	9.2	20.0	22.7	28.4
94	–3.4	4.3	9.0	19.8	22.6	28.4
96	–3.6	4.2	8.8	19.6	22.4	28.4
98	–3.8	4.0	8.6	19.4	22.2	28.4
100	–3.9	3.8	8.4	19.3	22.0	28.4
102	–4.1	3.6	8.2	19.1	21.8	28.4
104	–4.3	3.4	8.1	18.9	21.7	28.4
106	–4.5	3.2	7.9	18.7	21.5	28.4
108	–4.7	3.1	7.7	18.5	21.3	28.2
110	–4.9	2.9	7.5	18.3	21.1	28.0
112	–5.0	2.7	7.3	18.2	20.9	27.8
114	–5.2	2.5	7.2	18.0	20.7	27.6

Outdoor heat exchanger temperature of Defrost **OUT**

Outdoor temperature (°F)	Outdoor heat exchanger temperature (°F)
44.6	48.3
42.8	49.6
41.0	50.9
39.2	52.1
37.4	53.4
35.6	53.6
33.8	53.6
32.0	53.6
30.2	53.6
28.4	53.6
26.6	53.6
24.8	53.6
23.0	53.6
21.2	53.6
19.4	53.6
17.6	53.6
15.8	53.6
14.0	53.6
12.2	53.6
10.4	53.6
8.6	53.6
6.8	53.6
5.0	53.6

3/4/5MXT(H)

Outdoor heat exchanger temperature of Defrost **IN**

Compressor speed [rps]	Outdoor temperature (°F)							
	–13.0	–11.2	–3.1	14.0	19.4	32.0	35.6	44.6
6	–10.8	–9.3	–2.3	12.4	17.0	27.9	28.4	28.4
8	–11.0	–9.5	–2.5	12.2	16.8	27.7	28.4	28.4
10	–11.2	–9.6	–2.7	12.0	16.7	27.5	28.4	28.4
12	–11.4	–9.8	–2.9	11.8	16.5	27.3	28.4	28.4
14	–11.6	–10.0	–3.0	11.7	16.3	27.1	28.4	28.4
16	–11.7	–10.2	–3.2	11.5	16.1	26.9	28.4	28.4
18	–11.9	–10.4	–3.4	11.3	15.9	26.8	28.4	28.4
20	–12.1	–10.6	–3.6	11.1	15.7	26.6	28.4	28.4
22	–12.3	–10.7	–3.8	10.9	15.6	26.4	28.4	28.4
24	–12.5	–10.9	–4.0	10.7	15.4	26.2	28.4	28.4
26	–12.6	–11.1	–4.1	10.6	15.2	26.0	28.4	28.4
28	–12.8	–11.3	–4.3	10.4	15.0	25.8	28.4	28.4
30	–13.0	–11.5	–4.5	10.2	14.8	25.7	28.4	28.4
32	–13.2	–11.7	–4.7	10.0	14.6	25.5	28.2	28.4
34	–13.4	–11.8	–4.9	9.8	14.5	25.3	28.0	28.4
36	–13.6	–12.0	–5.1	9.6	14.3	25.1	27.9	28.4
38	–13.7	–12.2	–5.2	9.5	14.1	24.9	27.7	28.4
40	–13.9	–12.4	–5.4	9.3	13.9	24.7	27.5	28.4
42	–14.1	–12.6	–5.6	9.1	13.7	24.6	27.3	28.4
44	–14.3	–12.7	–5.8	8.9	13.6	24.4	27.1	28.4
46	–14.5	–12.9	–6.0	8.7	13.4	24.2	27.0	28.4
48	–14.7	–13.1	–6.2	8.5	13.2	24.0	26.8	28.4
50	–14.8	–13.3	–6.3	8.4	13.0	23.8	26.6	28.4
52	–15.0	–13.5	–6.5	8.2	12.8	23.6	26.4	28.4
54	–15.2	–13.7	–6.7	8.0	12.6	23.5	26.2	28.4
56	–15.4	–13.8	–6.9	7.8	12.5	23.3	26.0	28.4
58	–15.6	–14.0	–7.1	7.6	12.3	23.1	25.9	28.4
60	–15.8	–14.2	–7.2	7.4	12.1	22.9	25.7	28.4
62	–15.9	–14.4	–7.4	7.3	11.9	22.7	25.5	28.4
64	–16.1	–14.6	–7.6	7.1	11.7	22.6	25.3	28.4
66	–16.3	–14.8	–7.8	6.9	11.5	22.4	25.1	28.4
68	–16.5	–14.9	–8.0	6.7	11.4	22.2	24.9	28.4
70	–16.7	–15.1	–8.2	6.5	11.2	22.0	24.8	28.4
72	–16.9	–15.3	–8.3	6.4	11.0	21.8	24.6	28.4
74	–17.0	–15.5	–8.5	6.2	10.8	21.6	24.4	28.4
76	–17.2	–15.7	–8.7	6.0	10.6	21.5	24.2	28.4
78	–17.4	–15.9	–8.9	5.8	10.4	21.3	24.0	28.4
80	–17.6	–16.0	–9.1	5.6	10.3	21.1	23.8	28.4
82	–17.8	–16.2	–9.3	5.4	10.1	20.9	23.7	28.4
84	–18.0	–16.4	–9.4	5.3	9.9	20.7	23.5	28.4
86	–18.1	–16.6	–9.6	5.1	9.7	20.5	23.3	28.4
88	–18.3	–16.8	–9.8	4.9	9.5	20.4	23.1	28.4
90	–18.5	–17.0	–10.0	4.7	9.3	20.2	22.9	28.4
92	–18.7	–17.1	–10.2	4.5	9.2	20.0	22.7	28.4
94	–18.9	–17.3	–10.4	4.3	9.0	19.8	22.6	28.4
96	–19.0	–17.5	–10.5	4.2	8.8	19.6	22.4	28.4
98	–19.2	–17.7	–10.7	4.0	8.6	19.4	22.2	28.4
100	–19.4	–17.9	–10.9	3.8	8.4	19.3	22.0	28.4
102	–19.6	–18.0	–11.1	3.6	8.2	19.1	21.8	28.4
104	–19.8	–18.2	–11.3	3.4	8.1	18.9	21.7	28.4
106	–20.0	–18.4	–11.5	3.2	7.9	18.7	21.5	28.4
108	–20.1	–18.6	–11.6	3.1	7.7	18.5	21.3	28.2
110	–20.3	–18.8	–11.8	2.9	7.5	18.3	21.1	28.0
112	–20.5	–19.0	–12.0	2.7	7.3	18.2	20.9	27.8
114	–20.7	–19.1	–12.2	2.5	7.2	18.0	20.7	27.6

Outdoor heat exchanger temperature of Defrost **OUT**

Outdoor temperature (°F)	Outdoor heat exchanger temperature (°F)
44.6	48.3
42.8	49.6
41.0	50.9
39.2	52.1
37.4	53.4
35.6	53.6
33.8	53.6
32.0	53.6
30.2	53.6
28.4	53.6
26.6	53.6
24.8	53.6
23.0	53.6
21.2	53.6
19.4	53.6
17.6	53.6
15.8	53.6
14.0	53.6
12.2	53.6
10.4	53.6
8.6	53.6
6.8	53.6
5.0	53.6
3.2	53.6
1.4	53.6
–0.4	53.6
–2.2	53.6
–4.0	53.6
–5.8	53.6
–7.6	53.6
–9.4	53.6
–11.2	53.6
–13.0	53.6

2.13 Low Compressor Speed High Pressure Limit

Outline

The system controls the upper limit of the compressor speed to prevent abnormal high pressure while the compressor speed is low. Control is carried out according to three zones.

Details

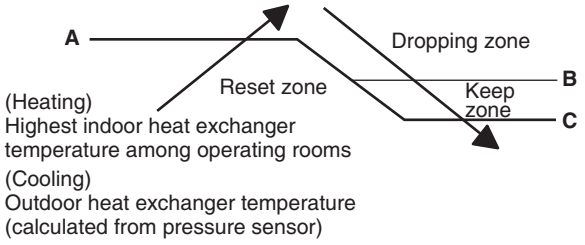

R4004267

Cooling

A (°C) = **D** × target compressor speed + **E** × Lowest indoor heat exchanger temperature among operating rooms + **F**

Heating

A (°C) = **G** × target compressor speed + **H** × outdoor heat exchanger + **J**

A ≤ 56°C (When the above is 56°C or higher)
B (°C): A – 1 (°C)
C (°C): A – 4 (°C)

■ **2MXM**

	Target Compressor speed < 8	16 ≤ Target Compressor speed < 14	21 ≤ Target Compressor speed < 30
D	224/256	546/256	96/256
E	0/256	0/256	0/256
F	34.5	24.5	49
G	224/256	546/256	96/256
H	0/256	0/256	0/256
J	34.5	24.5	49

■ **3/4MXM, 2MXT(H)**

	Target Compressor speed < 15	16 ≤ Target Compressor speed < 20	21 ≤ Target Compressor speed < 25
D	0/256	312/256	512/256
E	0/256	0/256	0/256
F	43.5	25.5	10
G	0/256	312/256	512/256
H	0/256	0/256	0/256
J	43.5	25.5	10

■ **5MXM, 3/4/5MXT(H)**

	Target Compressor speed < 16	16 ≤ Target Compressor speed < 21	21 ≤ Target Compressor speed < 25
D	90/256	130/256	220/256
E	90/256	90/256	60/256
F	32.5	30.5	27.5
G	90/256	130/256	220/256
H	90/256	90/256	60/256
J	32.5	30.5	27.5

2.14 Electronic Expansion Valve Control

Outline

The following items are included in the electronic expansion valve control.

Electronic expansion valve is fully closed

1. Electronic expansion valve is fully closed when turning on the power.
2. Pressure equalizing control

Room Distribution Control

1. Gas pipe isothermal control
2. SC (subcooling) control
3. Liquid pipe temperature control (with all ports connected and all rooms being air-conditioned)
4. Liquid pipe temperature control for rooms not in operation
5. Dew prevention control for indoor rotor

Open Control

1. Electronic expansion valve control when starting operation
2. Electronic expansion valve control when the compressor speed changes
3. Electronic expansion valve control for defrosting
4. Electronic expansion valve control for oil recovery
5. Electronic expansion valve control when a discharge pipe temperature is abnormally high
6. Electronic expansion valve control when the discharge pipe thermistor is disconnected
7. Electronic expansion valve control for indoor unit anti-icing control

Feedback Control

Target discharge pipe temperature control

Details

The following are the examples of the electronic expansion valve control for each operation mode.

Operation pattern	● : Available — : Not available	Gas pipe isothermal control	SC (subcooling) control	Control when the compressor speed changes	Control for abnormally high discharge pipe temperature	Oil recovery control	Indoor anti-icing control	Liquid pipe temperature control	Liquid pipe temperature control for non-operating units	Dew prevention control for indoor rotor
When power is turned on	Fully closed when power is turned on	—	—	—	—	—	—	—	—	—
Cooling, 1 room operation	Open control when starting	—	—	—	●	●	●	—	—	—
	(Control of target discharge pipe temperature)	—	—	●	●	●	●	—	—	●
Cooling, 2 rooms operation to Cooling, 4 rooms operation	Control when the operating room is changed	—	—	—	●	●	●	—	—	●
	(Control of target discharge pipe temperature)	●	—	●	●	●	●	—	—	●
Stop	Pressure equalizing control	—	—	—	—	—	—	—	—	—
Heating, 1 room operation	Open control when starting	—	—	—	●	—	—	—	—	—
	(Control of target discharge pipe temperature)	—	● ★2	●	●	—	—	● ★1	● ★3	—
Heating, 2 rooms operation	Control when the operating room is changed	—	—	—	●	—	—	—	—	—
	(Control of target discharge pipe temperature)	—	● ★2	●	●	—	—	● ★1	● ★3	—
	(Defrost control)	—	—	—	—	—	—	—	—	—
Stop	Pressure equalizing control	—	—	—	—	—	—	—	—	—
Heating operation	Open control when starting	—	—	—	●	—	—	—	—	—
Discharge pipe thermistor disconnection control	Continue	—	● ★2	—	—	—	—	● ★1	● ★3	—
Stop	Pressure equalizing control	—	—	—	—	—	—	—	—	—

R4004269

★1: When all the indoor units are operating, liquid pipe temperature control is conducted.

★2: SC (subcooling) control is conducted for the operating indoor units, when some of the units are not operating.

★3: Liquid pipe temperature control for stopped room is conducted for the non-operating indoor units.

2.14.1 Initialization as Power Supply On

The electronic expansion valve is initialized (fully closed) when the power is turned on. Then, the valve opening position is set and the pressure is equalized.

2.14.2 Pressure Equalizing Control

When the compressor is stopped, the pressure equalizing control is activated. The electronic expansion valve opens, and develops the pressure equalization.

2.14.3 Opening Limit Control

The maximum and minimum opening of the electronic expansion valve are limited.

	2/3/4MXM 2MXT(H)	5MXM 3/4/5MXT(H)
Max. valve opening (pulse)	480	480
Min. valve opening (pulse)	42	44

* In the room the unit is in operation

The electronic expansion valve is fully closed in the room where cooling is stopped and is opened at a fixed degree during defrosting.

2.14.4 Starting Operation Control/Changing Operation Room

The electronic expansion valve opening is controlled when the operation starts, thus preventing superheating or liquid compression.

2.14.5 Control when the Compressor Speed Changes

When the target discharge pipe temperature control is active, if the target compressor speed changes to a specified value in a certain period of time, the target discharge pipe temperature control is canceled and the target opening of the electronic expansion valve is changed.

2.14.6 Oil Recovery Function

Outline

The electronic expansion valve opening for the room not in operation is set as to open for a certain time at a specified interval so that the oil for the room not in operation may not be accumulated.

Details

During cooling operation, the electronic expansion valve for the room not in operation is opened every 1 hour by 80 pulses for specified time.

2.14.7 High Discharge Pipe Temperature Control

When the compressor is operating, if the discharge pipe temperature exceeds a certain value, the electronic expansion valve opens and the refrigerant runs to the low pressure side.
This procedure lowers the discharge pipe temperature.

2.14.8 Discharge Pipe Thermistor Disconnection Control

Outline

The disconnection of the discharge pipe thermistor is detected by comparing the discharge pipe temperature with the condensing temperature. If the discharge pipe thermistor is disconnected, the electronic expansion valve opens according to the outdoor temperature and the operation compressor speed, operates for a specified time, and then stops.
After 3 minutes, the operation restarts and checks if the discharge pipe thermistor is disconnected. If the discharge pipe thermistor is disconnected, the system stops after operating for a specified time.
If the disconnection is detected repeatedly, the system is shut down. When the compressor runs for 60 minutes without any error, the error counter is reset.

Details

Determining thermistor disconnection
When the starting control (**A** seconds) finishes, the following adjustment is made.

1. When the operation mode is cooling
   When the following condition is fulfilled, the discharge pipe thermistor disconnection is ascertained.
   Discharge pipe temperature + 6°C (10.8°F) < outdoor heat exchanger temperature
2. When the operation mode is heating
   When the following condition is fulfilled, the discharge pipe thermistor disconnection is ascertained.
   Discharge pipe temperature + 6°C (10.8°F) < highest indoor heat exchanger temperature

	2MXM	3/4MXM 2MXT(H)	5MXM 3/4/5MXT(H)
A (seconds)	630	930	1,150

When the thermistor is disconnected
When the disconnection is ascertained, the compressor continues operation for 9 minutes and then stops.

2.14.9 Gas Pipe Isothermal Control During Cooling

When the units are operating in multiple rooms, the gas pipe temperature is detected and the electronic expansion valve opening is adjusted so that the temperature of the gas pipe in each room becomes equal.

- When the gas pipe temperature > the average gas pipe temperature,
  → the opening degree of electronic expansion valve for the corresponding room increases.
- When the gas pipe temperature < the average gas pipe temperature,
  → the opening degree of electronic expansion valve for the corresponding room decreases.

The temperatures are monitored every **A** seconds.

	2/3/4MXM 2MXT(H)	5MXM 3/4/5MXT(H)
A (seconds)	40	30

2.14.10 SC (Subcooling) Control

When the units are operating in multiple rooms, the gas pipe temperature is detected and the electronic expansion valve opening is adjusted so that the temperature of the gas pipe in each room becomes equal.

- When the gas pipe temperature > the average gas pipe temperature,
  → the opening degree of electronic expansion valve for the corresponding room increases.
- When the gas pipe temperature < the average gas pipe temperature,
  → the opening degree of electronic expansion valve for the corresponding room decreases.

The temperatures are monitored every **A** seconds.

	2MXM	3/4MXM	5MXM	2MXT(H)	3/4/5MXT(H)
A (seconds)	20	60	45	60	45

2.14.11 Target Discharge Pipe Temperature Control

The target discharge pipe temperature is obtained from the indoor and outdoor heat exchanger temperature, and the electronic expansion valve opening is adjusted so that the actual discharge pipe temperature becomes close to the target discharge pipe temperature. (Indirect SH (superheating) control using the discharge pipe temperature)

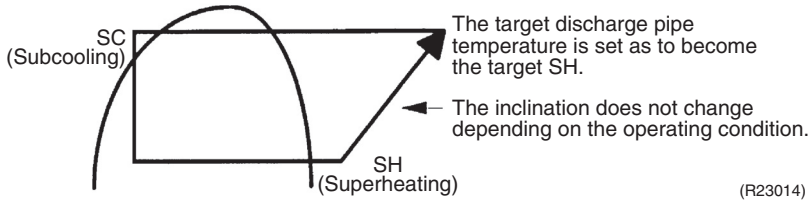

The electronic expansion valve opening and the target discharge pipe temperature are adjusted every **A** seconds. The target discharge pipe temperature is controlled by indoor heat exchanger temperature and outdoor heat exchanger temperature. The opening degree of the electronic expansion valve is adjusted by the following.

- Target discharge pipe temperature
- Actual discharge pipe temperature
- Previous discharge pipe temperature

	2/3/4MXM 2MXT(H)	5MXM 3/4/5MXT(H)
A (seconds)	20	15

2.15 Malfunctions

2.15.1 Sensor Malfunction Detection

Relating to Thermistor Malfunction

1. Outdoor heat exchanger thermistor
2. Discharge pipe thermistor
3. Radiation fin thermistor
4. Gas pipe thermistor
5. Outdoor temperature thermistor
6. Liquid pipe thermistor

2.15.2 Detection of Overcurrent and Overload

Outline

In order to protect the inverter, an excessive output current is detected and the OL temperature is observed to protect the compressor.

Details

- If the inverter current exceeds **A** A, the system shuts down the compressor.
- If the OL (Compressor head) temperature exceeds **B**°C (°F), the compressor stops.

		2MXM	3/4MXM	5MXM	2MXT(H)	3MXT(H)	4/5MXT(H)
A (A)	Cooling	13.0	19.0	27.5	19.0	27.0	27.5
	Heating	15.0	19.0	29.0	19.0	27.0	29.0
B	(°C)	125	125	125	125	125	125
	(°F)	257	257	257	257	257	257

2.15.3 Anti-icing Function

During cooling, if the indoor heat exchanger temperature in the room not in operation becomes below the specified temperature for the specified time, the electronic expansion valve is opened in the operation stopped room as specified, and the fully closed operation is carried out. After this, if freezing abnormality occurs longer than specified time, the system shuts down as the system abnormality.

Part 5
Remote Controller

1. Applicable Remote Controller 77
2. ARC480A83 78
3. BRC073A6 80
4. BRC944B2 84

1. Applicable Remote Controller

Model Name	Wireless R/C	Reference Page	Wired R/C	Reference Page
CTXV07AVJU9	ARC480A83	78	BRC073A6 BRC944B2	80 84
FTXV09AVJU9				
FTXV12AVJU9				
FTXV15AVJU9				
FTXV18AVJU9				
FTXV24AVJU9				

Note

Refer to the operation manual of applicable model for details. You can download operation manuals from Daikin Business Portal:
Daikin Business Portal → Document Search → Item Category → Installation/Operation Manual
(URL: https://global1d.daikin.com/business_portal/login/)

2. ARC480A83

Signal transmitter

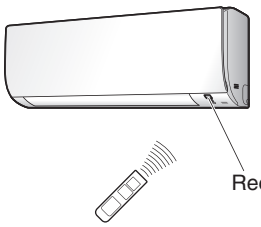

- To use the remote controller, aim the transmitter at the indoor unit. If there is anything blocking the signals between the unit and the remote controller, such as a curtain, the unit may not operate.
- The maximum transmission distance is about 23 ft. (7 m).

AUTO button

- Selects an appropriate operation mode (COOL or HEAT) automatically based on the indoor temperature and starts the operation.

Direct operation buttons

- Starts the COOL, DRY, HEAT or FAN ONLY operation.

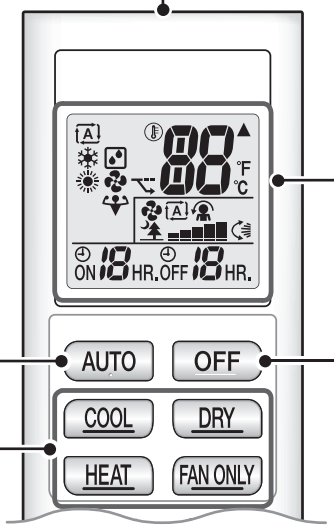

Display (LCD)

- Displays the current settings. (In this illustration, each section is shown with all its displays on for the purpose of explanation.)

OFF button

- Press this button once to stop the operation.

R5000453

TEMPERATURE adjustment buttons

- Changes the temperature setting.

: AUTO	18 ~ 30 °C (64 ~ 86 °F)
: DRY	Not available
: COOL	18 ~ 32 °C (64 ~ 90 °F)
: HEAT	10 ~ 30 °C (50 ~ 86 °F)
: FAN	Not available

FAN setting button

- Selects the airflow rate setting every time you press this button.

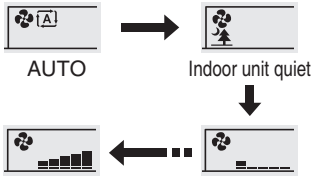

- In indoor unit quiet operation, operation sound becomes weak. (The airflow rate also decreases.)
- In DRY operation, the airflow rate setting is not available.

COMFORT button*1

- Starts COMFORT AIRFLOW operation.

ECONO*4 button

- Starts ECONO operation.

POWERFUL*2 button and Wireless LAN*3 button (push 5 seconds)

- Starts POWERFUL operation.
- Wireless LAN connection.

SWING*5 buttons

- Adjusts the airflow direction.
- When you press **SWING** button, the flap moves up and down. The flap stops when you press **SWING** button again.

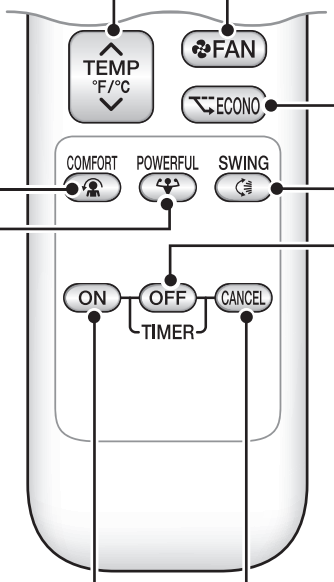

OFF TIMER button (NIGHT SET mode)

- Adjusts the OFF TIMER setting.
- The timer can be set 1 ~ 12 hours.

ON TIMER button

- Adjusts the ON TIMER setting.
- The time can be set 1 ~ 12 hours.

TIMER CANCEL button

- Cancels the timer setting.

R5000461

Reference Refer to the following pages for details.

★1 COMFORT AIRFLOW operation	P.37
★2 POWERFUL operation	P.43
★3 Wireless LAN connection	P.45
★4 ECONO operation	P.42
★5 Auto-swing	P.36

3. BRC073A6

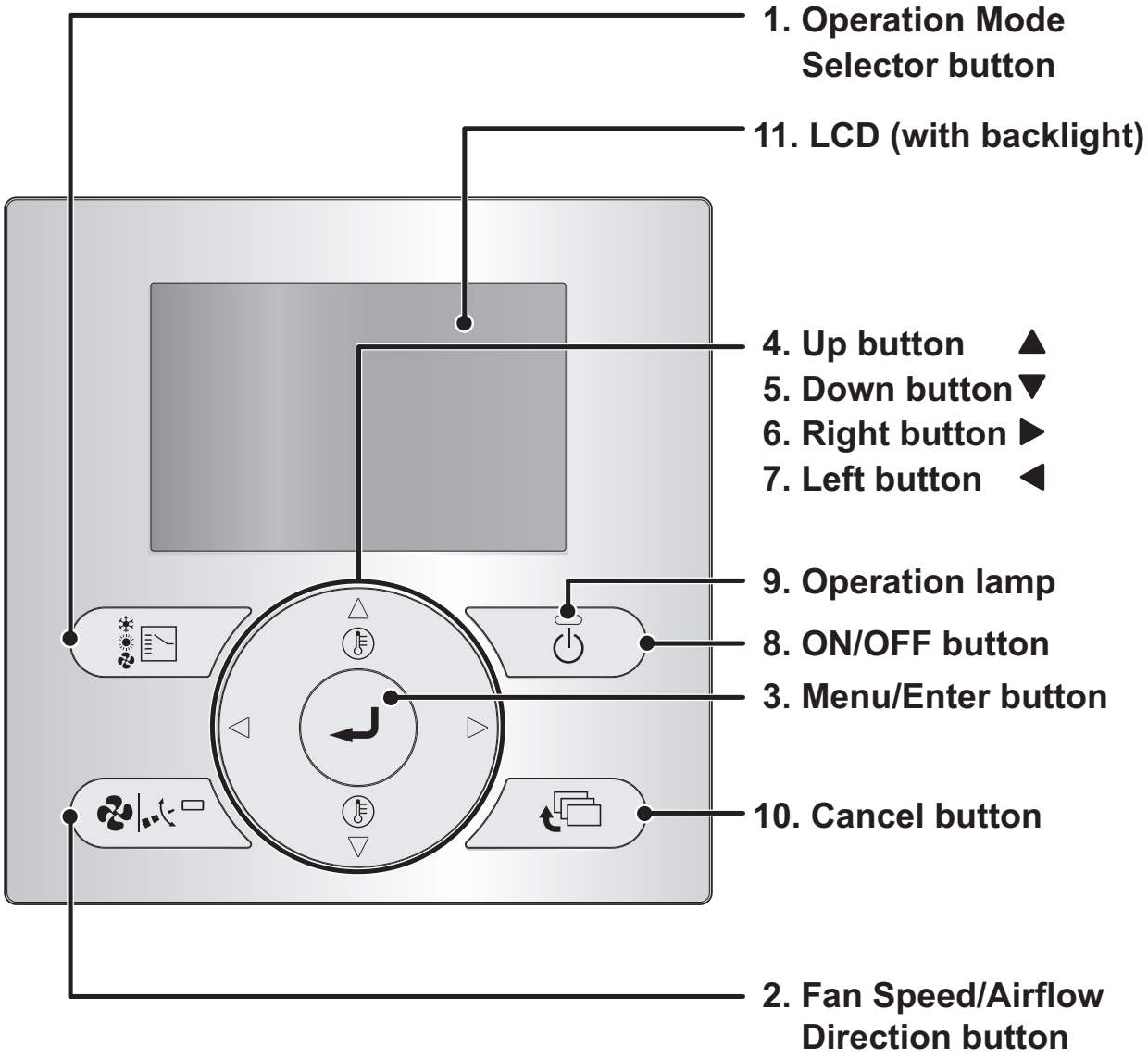
1. Operation Mode Selector button
11. LCD (with backlight)
4. Up button ▲
5. Down button ▼
6. Right button ▶
7. Left button ◀
9. Operation lamp
8. ON/OFF button
3. Menu/Enter button
10. Cancel button
2. Fan Speed/Airflow Direction button

1. Operation Mode Selector button

- Press this button to select the operation mode of your preference.
- Available modes may vary with the connected model.

2. Fan Speed/Airflow Direction button

- Used to change the fan speed and airflow direction.
- Available fan speeds and airflow directions may vary with the connected model.

3. Menu/Enter button

- This button is enabled by default.
- Used to display the Main Menu or enter the selected item.

4. Up button ▲

- Used to raise the set temperature.
- The next item on the upper side will be highlighted.
  (Keep pressing the button to cycle through the values or items).
- Used to change the selected item.

5. Down button ▼

- Used to lower the set temperature.
- The next item on the lower side will be highlighted.
  (Keep pressing the button to cycle through the values or items).
- Used to change the selected item.

6. Right button ▶

- Used to highlight the next items on the right-hand side.
- The display contents are changed to the next screen.

7. Left button ◀

- Used to highlight the next items on the left-hand side.
- The display contents are changed to the previous screen.

8. ON/OFF button

- Press to start or stop the air conditioner.

9. Operation lamp (Green)

- This lamp lights up during operation.
- This lamp is not lit when the unit operation is OFF.
- This lamp blink if an error or mode conflict occurs.

10. Cancel button

- This button is enabled by default.
- Used to return to the previous screen.

11. LCD (with backlight)

- The backlight will be lit for approximately 30 seconds when one of the buttons is pressed.
- The actions linked to the buttons, except for the ON/OFF button, are not carried out when the backlight is not lit.

Liquid Crystal Display

- There are four display methods for the liquid crystal display (LCD) available. The Standard display, which is used by default, and the Detailed display. There is also the possibility to use only Icon or Icon and Text mode (see the Installation manual).
- To change the active display method, select the desired display method in the Display Method screen.
- The displayed contents on the screen may vary with the operation mode of the connected models. (E.g.: The following display will appear when the air conditioner is in heating operation).

Standard display

With icons	With icons and text (default)
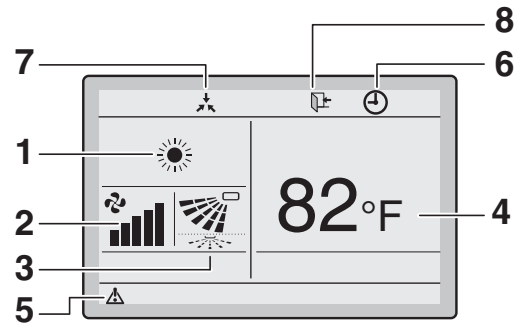	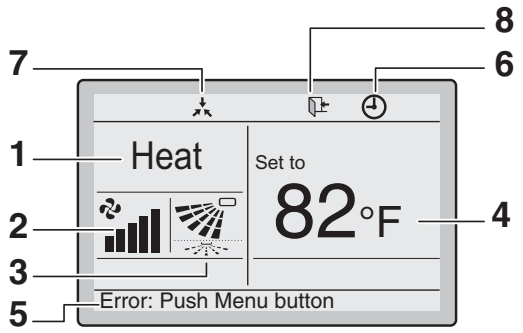

Detailed display

■ The clock and Detailed selection items appear on the Detailed display in addition to the items appearing on the Standard display.

With icons	With icons and text
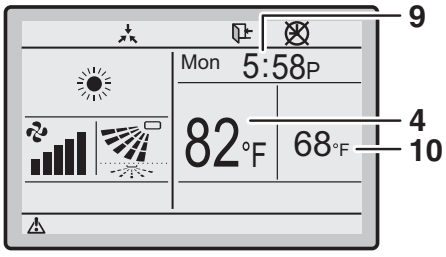	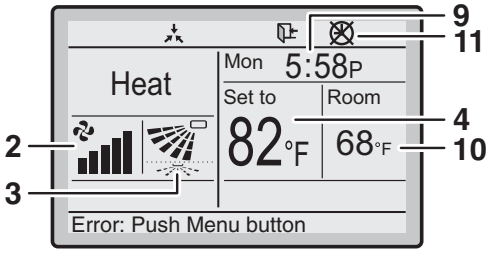

1. Operation mode

- Indicates the current operation mode.

Operation Mode		
Cool	Heat	Auto (Heat)
		
Fan	Dry	Auto (Cool)
		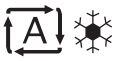

2. Fan Speed

- Indicates the fan speed that is set for the air conditioner.
- The fan speed will not be displayed if the air conditioner does not have the fan speed control function.

3. Airflow direction

- Displayed only when the air conditioner is in operation.
- Indicates the airflow direction that is set for the air conditioner.
- The possible directions depend on the indoor unit.

4. Set/Setback temperature display

- When the unit is turned ON, the temperature that is set for the air conditioner is displayed.
- When the unit is turned OFF and Setback is disabled, the temperature that is set for the air conditioner is displayed.
- When the unit is turned OFF and Setback is enabled, the temperature that is set for the setback function is displayed in smaller digits.

5. Error "⚠"

- Indicates a unit error.

6. Timer enabled "🕘"

- Indicates that the schedule timer or the OFF timer is enabled.

7. Under Centralised control "⛓"

- Indicates that the air conditioner is under the management of central control equipment (optional accessories) and the operation of the system through the remote controller is prohibited.

8. Setback "⏎"

- The setback icon flashes when the unit is turned on under the setback control.

9. Clock (12/24 hours real time clock)

- Indicates that the clock is set.
- If the clock is not set, "-- : --" will be displayed.

10. Detailed selection

- Displayed when the detailed display mode is selected.
- No detailed items are selected by default.

11. Timer problem "⊠"

- Indicates that the clock needs to be set again.
- The schedule timer function will not work unless the clock is set again.

4. BRC944B2

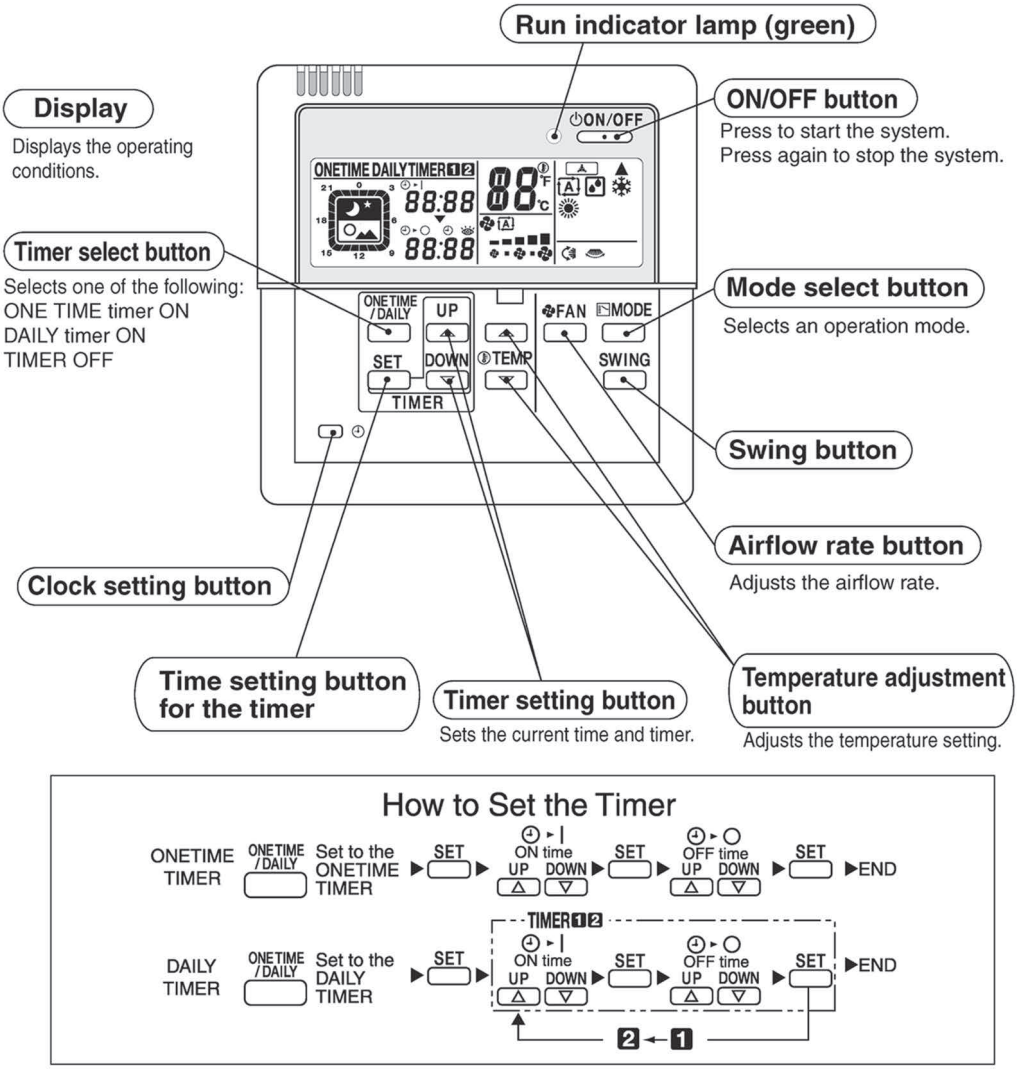

R5000214

Caution This remote controller cannot be used together with a standard wireless remote controller. Otherwise, what appears on this remote controller's display may fail to correspond to actual operating conditions.

Part 6
Service Diagnosis

1. General Problem Symptoms and Check Items 87
2. Troubleshooting with LED 88
   2.1 Indoor Unit 88
   2.2 Outdoor Unit 89
3. Service Diagnosis 90
   3.1 ARC480 Series 90
   3.2 BRC073A6 93
4. Code Indication on Remote Controller 95
   4.1 Indoor Unit 95
   4.2 Outdoor Unit 96
5. Troubleshooting for Indoor Unit 97
   5.1 Indoor Unit PCB Abnormality 97
   5.2 Freeze-up Protection Control/Heating Peak-cut Control 98
   5.3 Indoor Fan Motor (DC Motor) or Related Abnormality 99
   5.4 Indoor Heat Exchanger Thermistor or Related Abnormality 101
   5.5 Room Temperature Sensor Abnormality/Humidity Sensor Abnormality 102
   5.6 Signal Transmission Error (Between Indoor Unit and Outdoor Unit) 103
   5.7 Unspecified Voltage (Between Indoor Unit and Outdoor Unit) 105
6. Troubleshooting for Outdoor Unit 106
   6.1 Refrigerant Shortage 106
   6.2 Low-voltage Detection or Over-voltage Detection 109
   6.3 Wiring Error Check Unexecuted 111
   6.4 Unspecified Voltage (Between Indoor Unit and Outdoor Unit), Anti-icing Control in Other Rooms 112
   6.5 Anti-icing Control for Indoor Unit 113
   6.6 Outdoor Unit PCB Abnormality 115
   6.7 Actuation of High Pressure Switch 116
   6.8 OL Activation (Compressor Overload) 117
   6.9 Compressor Lock 119
   6.10 DC Fan Lock 121
   6.11 Input Overcurrent Detection 122
   6.12 Electronic Expansion Valve Coil Abnormality 124
   6.13 Four Way Valve Abnormality 125
   6.14 Discharge Pipe Temperature Control 127
   6.15 High Pressure Control in Cooling 128
   6.16 System Shutdown due to Temperature Abnormality in the Compressor 130
   6.17 Compressor Sensor System Abnormality 131
   6.18 High Pressure Switch System Abnormality 133
   6.19 Position Sensor Abnormality 134
   6.20 Thermistor or Related Abnormality (Outdoor Unit) 136

6.21 High Pressure Sensor Abnormality 138
6.22 Electrical Box Temperature Rise 139
6.23 Radiation Fin Temperature Rise 141
6.24 Output Overcurrent Detection 143
7. Check 146
7.1 Thermistor Resistance Check 146
7.2 Indoor Fan Motor Connector Check 147
7.3 Power Supply Waveform Check 147
7.4 Electronic Expansion Valve Check 148
7.5 Four Way Valve Performance Check 149
7.6 Inverter Unit Refrigerant System Check 149
7.7 Inverter Analyzer Check 150
7.8 Outdoor Fan Motor Check 151
7.9 Installation Condition Check 152
7.10 Discharge Pressure Check 152
7.11 Outdoor Fan System Check 153
7.12 Main Circuit Short Check 153
7.13 Capacitor Voltage Check 155
7.14 Power Module Check 156
7.15 High Pressure Sensor Check 158

1. General Problem Symptoms and Check Items

Symptom	Check Item	Details	Reference Page
None of the units operates.	Check the power supply.	Check if the rated voltage is supplied.	—
	Check the types of the indoor units.	Check if the indoor unit type is compatible with the outdoor unit.	—
	Check the outdoor temperature.	Heating/cooling operations are not available when the outdoor temperature is out of the operation limit. Check the reference page for the operation limit.	194
	Diagnose with remote controller indication	—	95, 96
	Check the wireless remote controller addresses.	Check if address settings for the wireless remote controller and indoor unit are correct.	166
Operation sometimes stops.	Check the power supply.	A power failure of 2 to 10 cycles can stop air conditioner operation. (Operation lamp OFF)	—
	Check the outdoor temperature.	Heating/cooling operations are not available when the outdoor temperature is out of the operation limit. Check the reference page for the operation limit.	194
	Diagnose with remote controller indication.	—	95, 96
Some indoor units do not operate.	Check the type of the indoor units.	Check if the indoor unit type is compatible with the outdoor unit.	—
	Diagnose with remote controller indication	—	95, 96
Units operate but do not cool, or do not heat.	Check for wiring and piping errors in the connection between the indoor and outdoor units.	Check the piping. Conduct the wiring error check described on the product diagnosis nameplate.	—
	Check for thermistor detection errors.	Check if the thermistor is mounted securely.	—
	Check for faulty operation of the electronic expansion valve.	Set all the units to cooling operation, and compare the temperatures of the liquid pipes to see if the each electronic expansion valve works.	—
	Diagnose with remote controller indication.	—	95, 96
	Diagnose by service port pressure and operating current.	Check for refrigerant shortage.	106
Large operating noise and vibrations	Check the installation condition.	Check if the required spaces for installation (specified in the installation manual) are provided.	—

2. Troubleshooting with LED

2.1 Indoor Unit

Operation Lamp

The operation lamp blinks when any of the following errors is detected.

1. When a protection device of the indoor or outdoor unit is activated, or when the thermistor malfunctions.
2. When a signal transmission error occurs between the indoor and outdoor units.

In either case, conduct the diagnostic procedure described in the following pages.

07/09/12 class

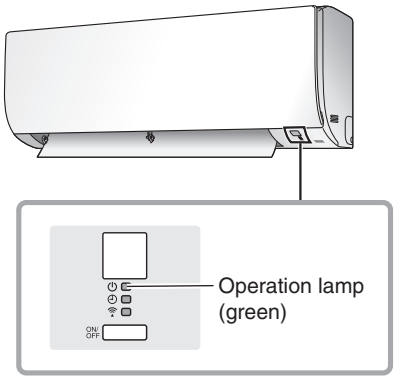

R6001149

15/18/24 class

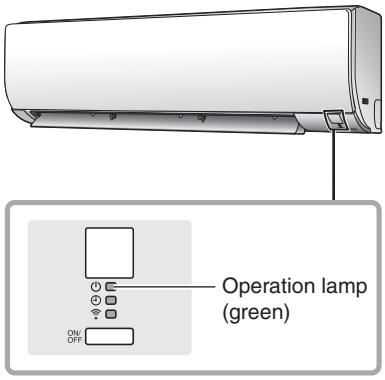

R6001150

2.2 Outdoor Unit

The outdoor unit has a green LED (LED A) and red LEDs (LED 1 ~ LED 5) on the PCB.
When the microcomputer works in order, the LED A blinks, and when the system is in normal condition, the red LEDs are OFF.
Even after the error is canceled and the unit operates in normal condition, the LED indication remains.

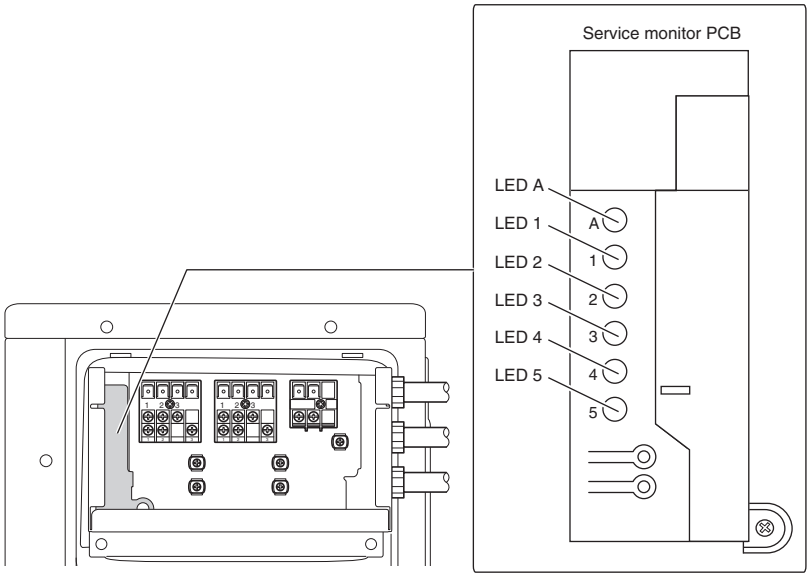

R6001151

★This illustration is for the 4MXM-A series as a representative.

Reference Refer to page 28 for the location of LED.

3. Service Diagnosis

3.1 ARC480 Series

3.1.1 Method 1

1. When **TIMER CANCEL** button is held down for 5 seconds, **00** is displayed on the temperature display screen.
2. Press **TIMER CANCEL** button repeatedly until a long beep sounds.

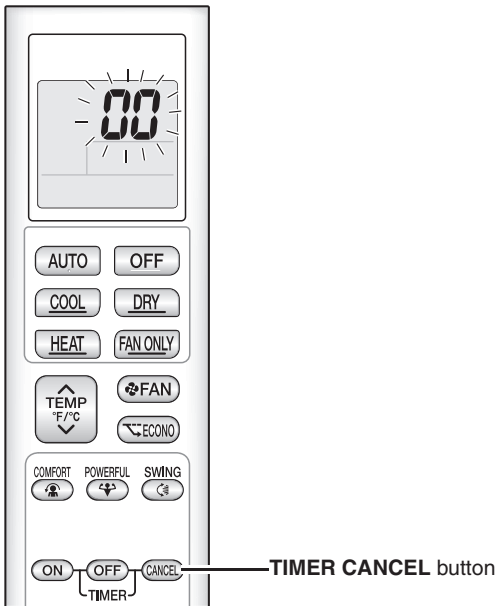

< ARC480 Series >

R6001152

Note(s)

1. A short beep or two consecutive beeps indicate non-corresponding codes.
2. To return to the normal mode, hold **TIMER CANCEL** button down for 5 seconds. When the remote controller is left untouched for 60 seconds, it also returns to the normal mode.
3. Not all the error codes are displayed. When you cannot find the error code, try method 2. Refer to page 91.

■ The code indication changes in the sequence shown below.

ARC480A83

No.	Code	No.	Code	No.	Code
1	**00**	16	**A3**	31	**UF**
2	**A5**	17	**H8**	32	**UH**
3	**E7**	18	**H9**	33	**P4**
4	**F3**	19	**C9**	34	**H7**
5	**F6**	20	**CC**	35	**U2**
6	**L3**	21	**C4**	36	**EA**
7	**L4**	22	**C5**	37	**AH**
8	**L5**	23	**J3**	38	**E9**
9	**U4**	24	**J6**	39	**FA**
10	**E6**	25	**J8**	40	**E8**
11	**H6**	26	**E5**	41	**CH**
12	**H0**	27	**A1**	42	**J9**
13	**A6**	28	**E1**	43	**E3**
14	**U0**	29	**UA**	44	**H3**
15	**C7**	30	**U3**	45	**F8**

3.1.2 Method 2

1. Press the center of **TEMP** button and **OFF** button at the same time.

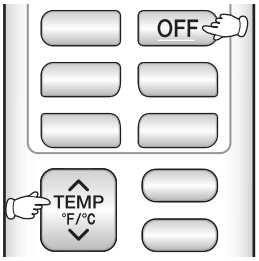

R6001161

SC is displayed on the LCD.

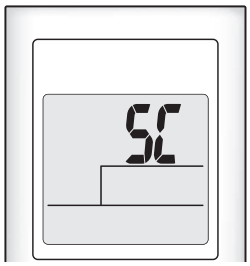

R6001158

2. Select **SC** (service check) with **TEMP ▲** or **TEMP ▼** button.
3. Press **FAN** button to enter the service check mode.

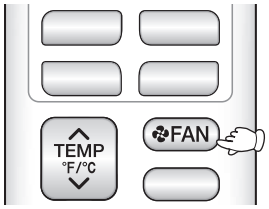

R6001162

00 is displayed and the left-side number blinks.

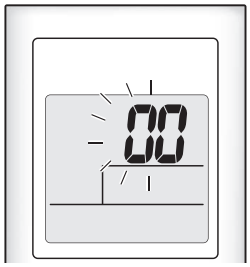

R6001159

4. Press **TEMP ▲** or **TEMP ▼** button and change the number until you hear the two consecutive beeps or the long beep.

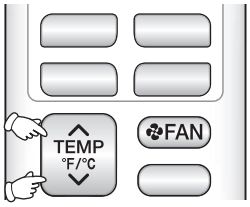

R6001163

5. Diagnose by the sound.
   - Beep: The left-side number does not correspond with the error code.
   - Two consecutive beeps: The left-side number corresponds with the error code but the right-side number does not.
   - Long beep: Both the left-side and right-side numbers correspond with the error code. The numbers indicated when you hear the long beep are the error code.
     Refer to Error codes and description on page 95.

6. Press **FAN** button.

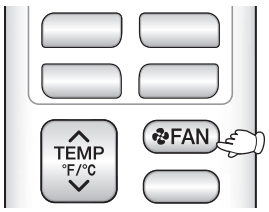

R6001162

The right-side number blinks.

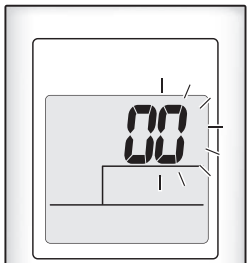

R6001160

7. Press **TEMP ▲** or **TEMP ▼** button and change the number until you hear the long beep.

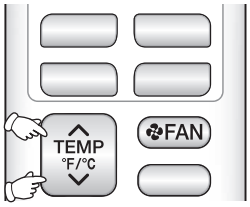

R6001163

8. Diagnose by the sound.
   - Beep: The left-side number does not correspond with the error code.
   - Two consecutive beeps: The left-side number corresponds with the error code but the right-side number does not.
   - Long beep: Both the left-side and right-side numbers correspond with the error code.

9. Determine the error code.
   The numbers indicated when you hear the long beep are the error code.
   Refer to Error codes and description on page 95.

10. Press **FAN** button for 5 seconds to exit from the service check mode.
    When the remote controller is left untouched for 60 seconds, it returns to the normal mode also.

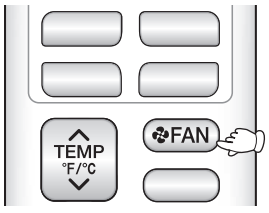

R6001162

3.2 BRC073A6

Relations Between Modes

On power-up, the message “**Checking the connection. Please standby**.” will be displayed on the remote controller screen temporarily and then the basic screen will be displayed. To access a mode from the basic screen, refer to the figure below.
When any of the operation buttons are pressed, the backlight will come on and remain lit for about 30 seconds. Be sure to press a button while the backlight is on.

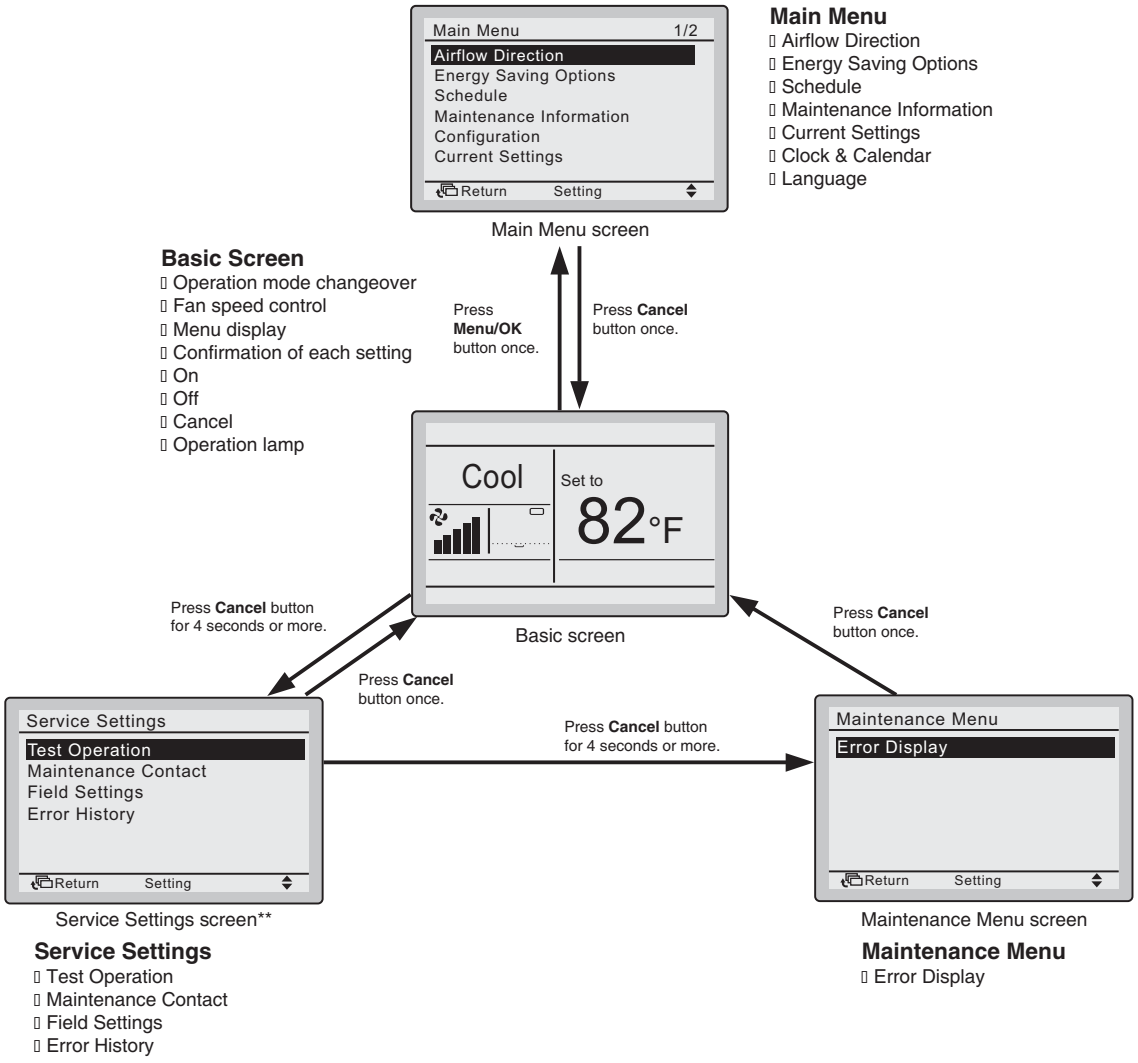

★ The items shown on the remote controller are different depending on the connected indoor unit.
** Not displayed in multi-split system.

R6001167

Service Diagnosis

The following message is displayed on the screen when an error occurs during operation. Check the error code and take the corrective action specified for the particular model.

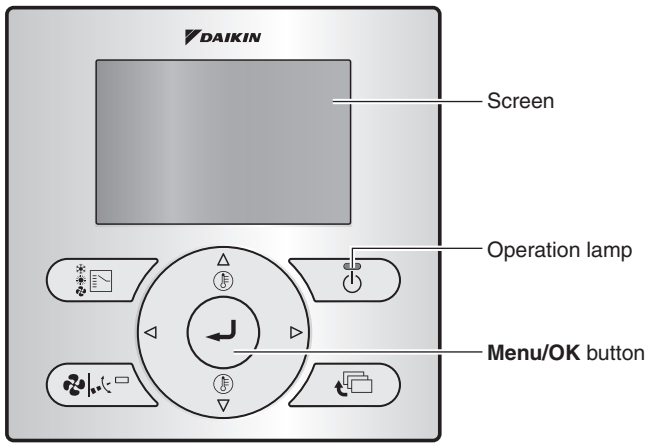

Operation Method

1

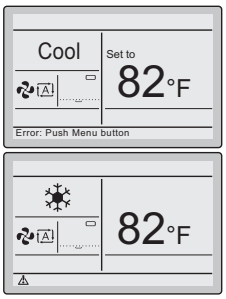

- If an error occurs, the error message or error icon and the operation lamp will blink.
- To display the error code and contact information, the Menu/Enter button needs to be enabled.
- Press the Menu/Enter button.

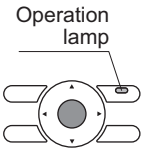

2

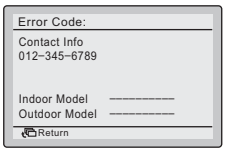

- The error code blinks and the contact address will appear.
- Notify your Daikin dealer of the Error code and Model name.

4. Code Indication on Remote Controller

4.1 Indoor Unit

Error Codes	Description	Reference Page
00	Normal condition	—
A1	Indoor unit PCB abnormality	97
A5	Freeze-up protection control/heating peak-cut control	98
A6	Indoor fan motor (DC motor) or related abnormality	99
C4	Indoor heat exchanger thermistor or related abnormality	101
C9	Room temperature sensor or related abnormality	102
CC	Humidity sensor abnormality	102
U4	Signal transmission error (between indoor unit and outdoor unit)	103
UA	Unspecified voltage (between indoor unit and outdoor unit)	105

4.2 Outdoor Unit

☼: ON, ●: OFF, ◑: Blinks

Outdoor Unit LED Indication						Error Codes	Description	Reference Page
Green	Red							
A	1	2	3	4	5			
◑	●	●	●	●	●	**00**	Normal condition	—
						UA	Unspecified voltage (between indoor unit and outdoor unit)	112
						UH	Anti-icing control in other rooms	112
◑	●	●	☼	☼	●	**(U0)**	Refrigerant shortage	106
◑	☼	●	●	☼	●	**U2**	Low-voltage detection or over-voltage detection	109
◑	●	☼	●	●	●	**U3**	Wiring error check unexecuted	111
◑	☼	●	☼	☼	●	**A5**	Anti-icing control for indoor unit	113
◑	☼	☼	☼	●	●	**E1**	Outdoor unit PCB abnormality	115
◑	☼	●	●	●	●	**E3**	Actuation of high pressure switch	116
◑	☼	●	☼	●	●	**(E5)**	OL activation (compressor overload)	117
◑	●	☼	☼	●	●	**(E6)**	Compressor lock	119
◑	☼	☼	☼	☼	●	**E7**	DC fan lock	121
◑	●	☼	●	☼	●	**E8**	Input overcurrent detection	121
◑	●	●	●	●	☼	**E9**	Electronic expansion valve abnormality	124
◑	☼	●	●	●	●	**EA**	Four way valve abnormality	125
◑	☼	●	☼	●	●	**F3**	Discharge pipe temperature control	127
◑	☼	●	☼	☼	●	**F6**	High pressure control in cooling	128
◑	●	●	☼	☼	●	**F8**	System shutdown due to temperature abnormality in the compressor	130
◑	☼	☼	●	●	●	**H0**	Master circuit malfunction	131
						H3	High pressure switch system abnormality	133
						H6	Position sensor abnormality	134
						H9	Outdoor temperature thermistor or related abnormality	136
						JA	High pressure sensor abnormality	138
						(J3)	Discharge pipe thermistor or related abnormality	136
						J6	Outdoor heat exchanger thermistor or related abnormality	136
						J8	Liquid pipe thermistor or related abnormality	136
						J9	Gas pipe thermistor or related abnormality	136
						P4	Radiation fin thermistor or related abnormality	136
◑	☼	☼	●	☼	●	**L3**	Electrical box temperature rise	139
◑	●	●	●	☼	●	**L4**	Radiation fin temperature rise	141
◑	●	●	☼	●	●	**L5**	Output overcurrent detection	143
☼	—	—	—	—	—	—	See the note 4.	—
●	—	—	—	—	—	—	Check the power supply.	—

Notes

1. The error codes in the parenthesis ( ) are displayed only when the system is shut down.
2. When a sensor error occurs, check the remote controller display to determine which sensor is malfunctioning.
   If the remote controller does not indicate the error code, conduct the following procedure.
   - Turn the power off and then on again. If the same LED indication appears again immediately after the power is turned on, the fault is in the thermistor.
   - If the above condition does not result, the fault is in the CT.
3. The indoor unit error code may take the precedence in the remote controller display.
4. Turn the power off and then on again. If the same LED indication appears again, outdoor unit PCB is faulty. Replace the outdoor unit PCB.

5. Troubleshooting for Indoor Unit

5.1 Indoor Unit PCB Abnormality

Error Code

A1

Method of Error Detection

The system checks if the circuit works properly within the microcomputer of the indoor unit.

Error Decision Conditions

The system cannot set the internal settings.

Supposed Causes

- Wrong models interconnected
- Defective indoor unit PCB
- Disconnection of connector
- Reduction of power supply voltage

Troubleshooting

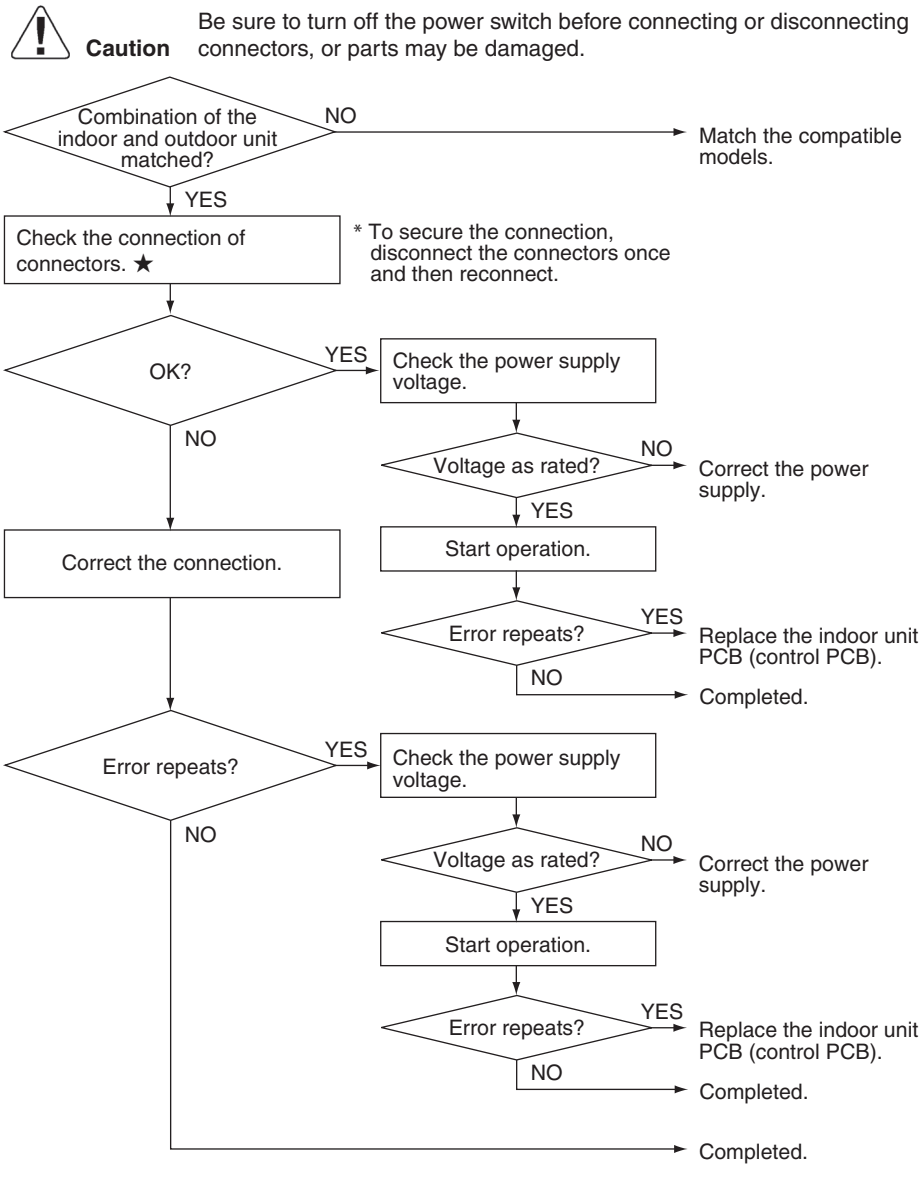

Note ★ Wire Harness (Connector): Terminal strip ~ Control PCB (S1)

5.2 Freeze-up Protection Control/Heating Peak-cut Control

Error Code **A5**

Method of Error Detection

- Freeze-up protection control
  During cooling operation, the freeze-up protection control (operation halt) is activated according to the temperature detected by the indoor heat exchanger thermistor.
- Heating peak-cut control
  During heating operation, the temperature detected by the indoor heat exchanger thermistor is used for the heating peak-cut control (operation halt, outdoor fan stop, etc.)

Error Decision Conditions

- Freeze-up protection control
  During cooling operation, the indoor heat exchanger temperature is below 0°C (32°F).
- Heating peak-cut control
  During heating operation, the indoor heat exchanger temperature is above 59 ~ 60°C (138.2 ~ 140°F).

Supposed Causes

- Short-circuited air
- Clogged air filter of the indoor unit
- Dust accumulation on the indoor heat exchanger
- Defective indoor heat exchanger thermistor
- Defective indoor unit PCB

Troubleshooting

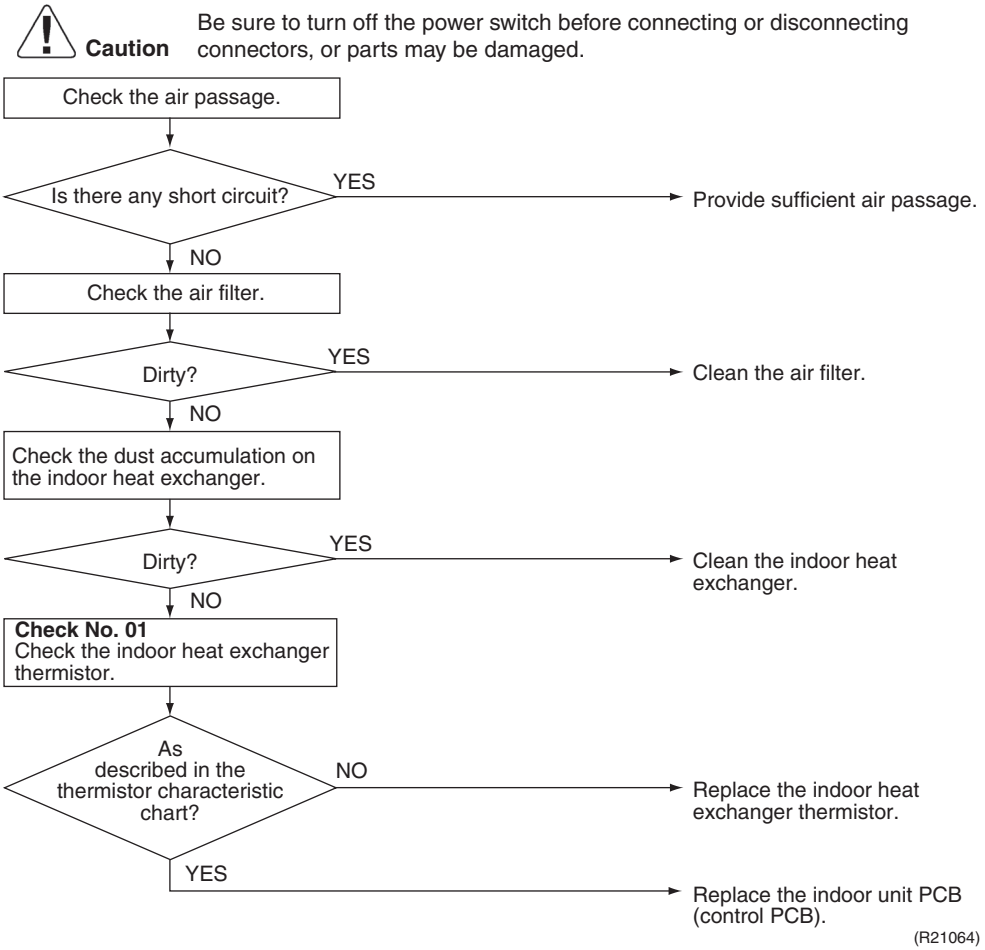

Reference **Check No.01** Refer to P.146

5.3 Indoor Fan Motor (DC Motor) or Related Abnormality

Error Code

A6

Method of Error Detection

The rotation speed detected by the Hall IC during fan motor operation determines abnormal fan motor operation.

Error Decision Conditions

The detected rotation speed does not reach the demanded rotation speed of the target tap, and is less than 50% of the maximum fan motor rotation speed.

Supposed Causes

- Remarkable decrease in power supply voltage
- Layer short inside the fan motor winding
- Breaking of wire inside the fan motor
- Breaking of the fan motor lead wires
- Defective capacitor of the fan motor
- Defective indoor unit PCB

Troubleshooting

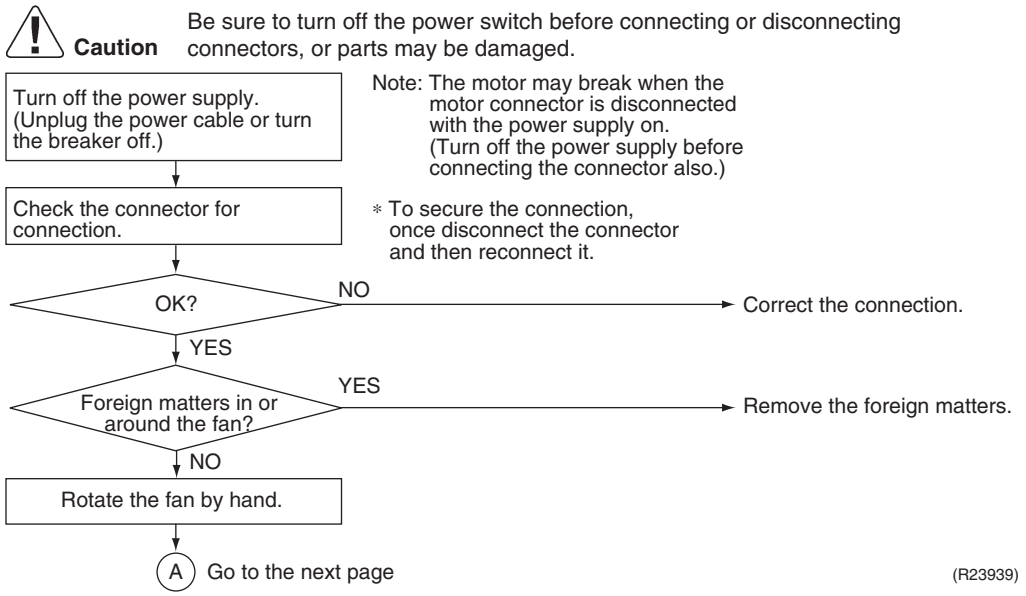

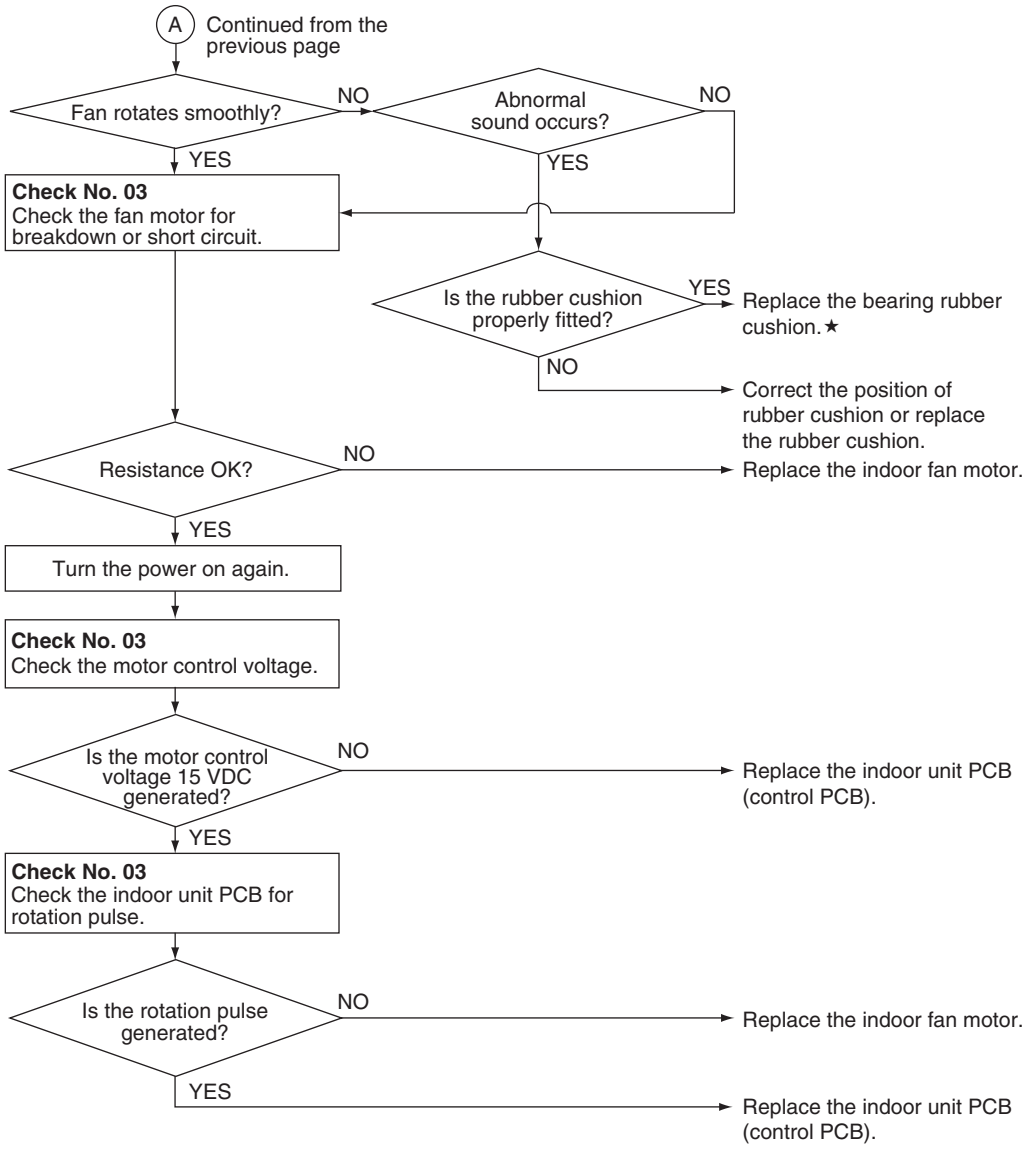

(R24945)

★Rubber cushion

07/09/12 class

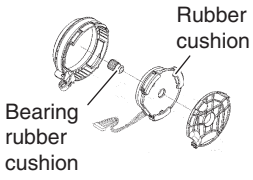

R6000581

15/18/24 class

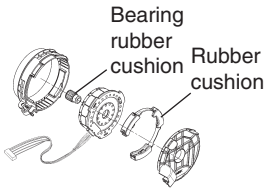

R6000306

Reference **Check No.03** Refer to P.147

5.4 Indoor Heat Exchanger Thermistor or Related Abnormality

Error Code

C4

Method of Error Detection

The temperatures detected by the thermistors determine thermistor errors.

Error Decision Conditions

The voltage between the both ends of the thermistor is either 4.96 V or more, or 0.04 V or less with the power on.

Supposed Causes

- Disconnection of connector
- Defective thermistor(s)
- Defective indoor unit PCB

Troubleshooting

Caution Be sure to turn off the power switch before connecting or disconnecting connectors, or parts may be damaged.

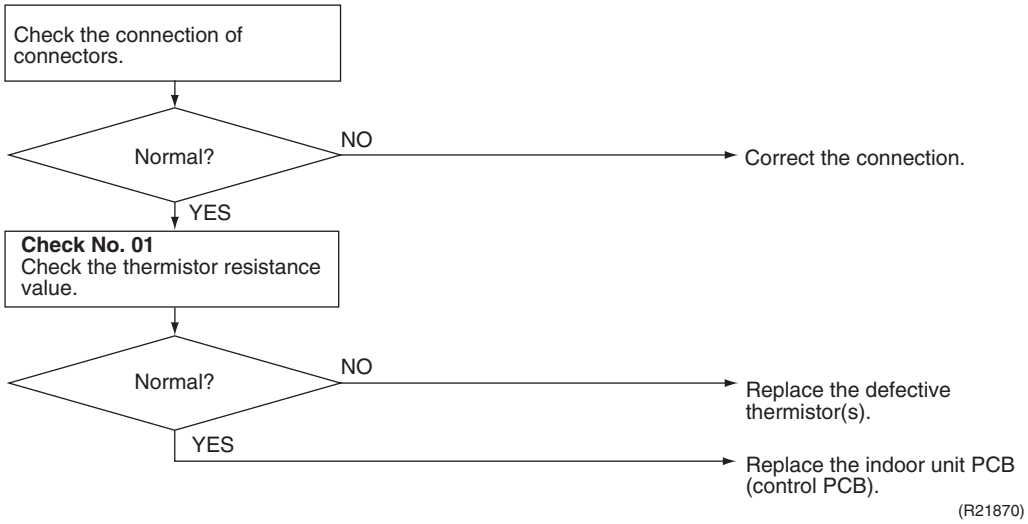

C4 : Indoor heat exchanger thermistor

Reference **Check No.01** Refer to P.146

5.5 Room Temperature Sensor Abnormality/Humidity Sensor Abnormality

Error Code

C9, CC

Method of Error Detection

Sensor abnormality is detected by input value.

Error Decision Conditions

The input from the humidity sensor is 4.96 V and more or 0.04 V and less.

Supposed Causes

- Disconnection of connector
- Defective humidity sensor
- Defective indoor unit PCB

Troubleshooting

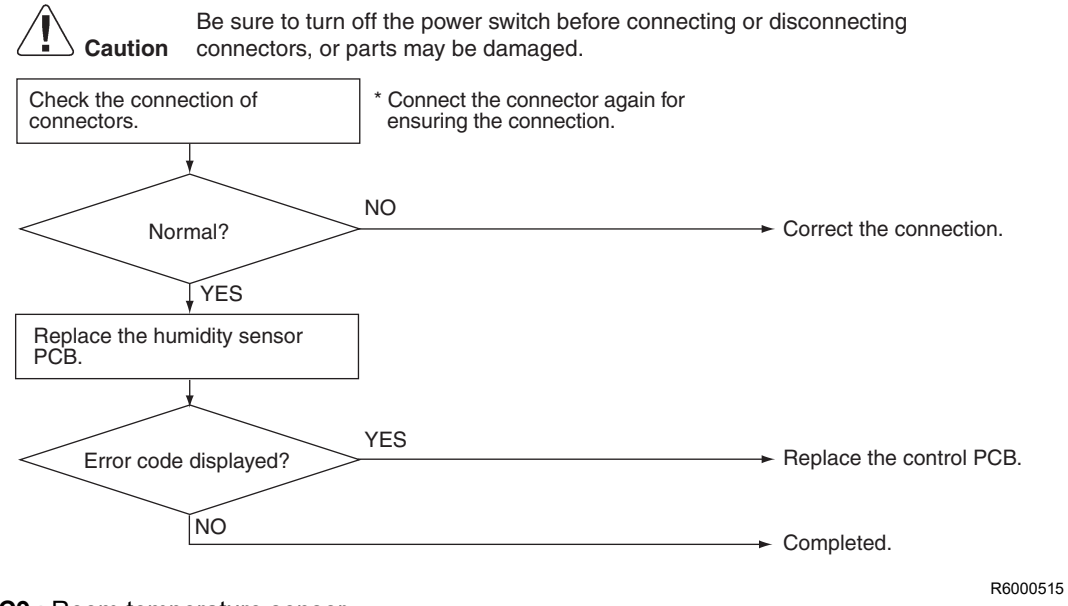

C9 : Room temperature sensor
CC : Humidity sensor

5.6 Signal Transmission Error (Between Indoor Unit and Outdoor Unit)

Error Code	**U4**
Method of Error Detection	The signal transmission data received from the outdoor unit is checked whether it is normal.
Error Decision Conditions	The data sent from the outdoor unit cannot be received normally, or the content of the data is abnormal.
Supposed Causes	■ Reduction of power supply voltage ■ Wiring error ■ Breaking of the connection wires between the indoor and outdoor units (wire No. 3) ■ Defective outdoor unit PCB ■ Short circuit inside the fan motor winding ■ Defective indoor unit PCB ■ Disturbed power supply waveform

Troubleshooting

Caution Be sure to turn off the power switch before connecting or disconnecting connectors, or parts may be damaged.

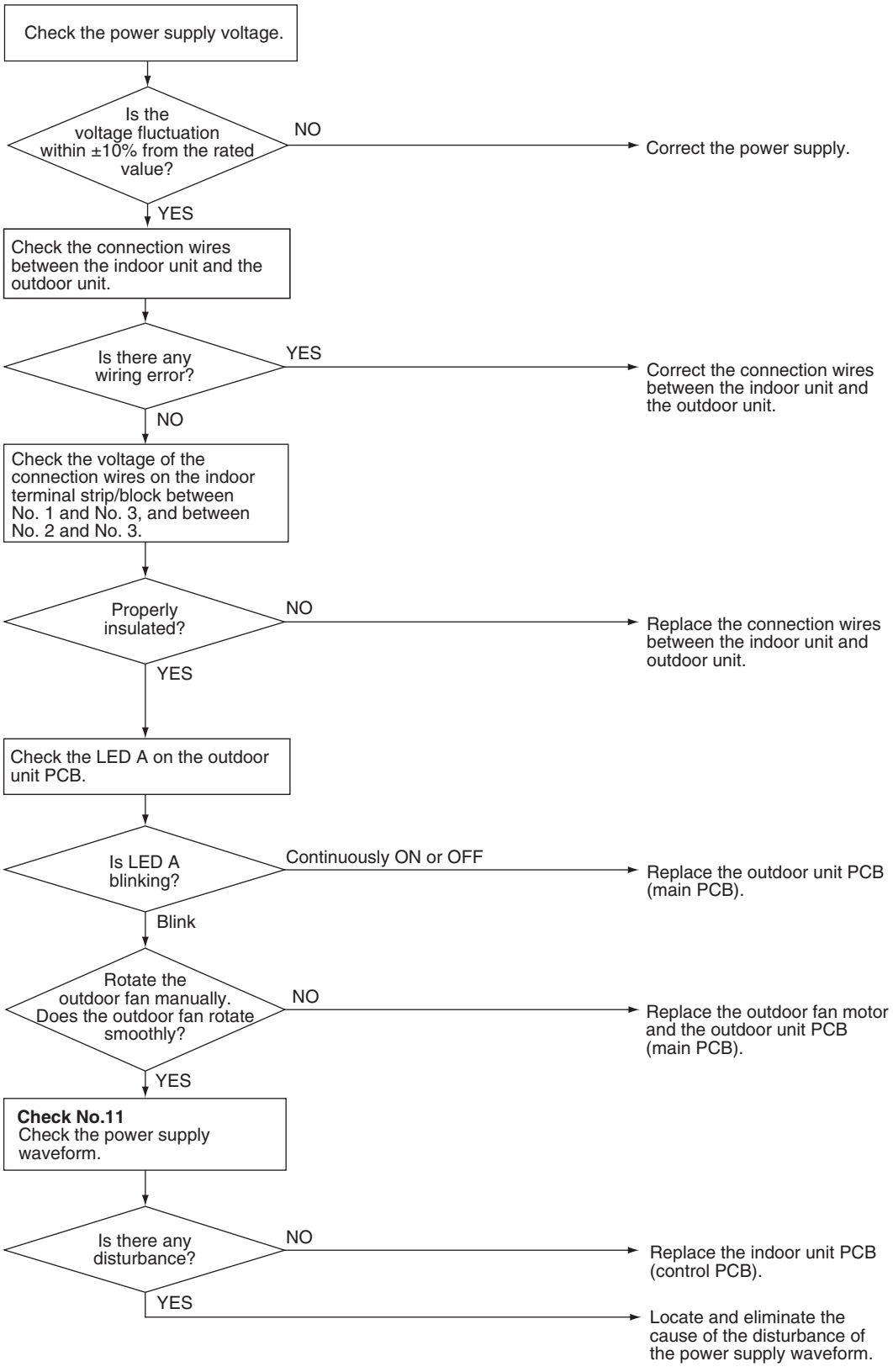

(R24621)

Reference **Check No.11** Refer to P.147

5.7 Unspecified Voltage (Between Indoor Unit and Outdoor Unit)

Error Code

UA

Method of Error Detection

The supply power is detected for its requirements (pair type is different from multi type) by the indoor/outdoor transmission signal.

Error Decision Conditions

The pair type and multi type are interconnected.

Supposed Causes

- Wrong models interconnected
- Wrong wiring of connecting wires
- Wrong indoor unit PCB or outdoor unit PCB mounted
- Defective indoor unit PCB
- Defective outdoor unit PCB

Troubleshooting

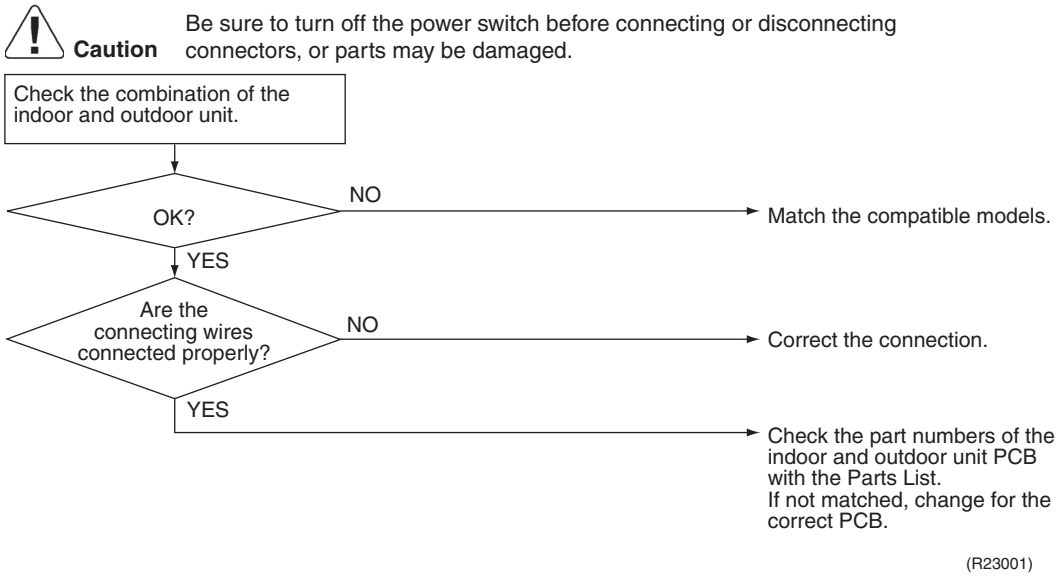

(R23001)

6. Troubleshooting for Outdoor Unit

6.1 Refrigerant Shortage

Error Code

U0

Outdoor Unit LED Display

A ◑ 1 ● 2 ● 3 ☼ 4 ☼ 5 ●

Method of Error Detection

Refrigerant shortage is detected by checking the input current value and the compressor running speed. If there is insufficient refrigerant, the input current tends to be lower than the normal value.

Error Decision Conditions

The following conditions continue for 7 minutes.

- Input current ≤ **A** × output compressor speed + **B**
- Output compressor speed > **C**

	2MXM	3/4MXM	2/3MXT(H)
A (coefficient)	10/1000	27/1000	27/1000
B (A)	0.3	2	2
C (rps)	40	40	40

- Power consumption ≤ **A** × output compressor speed + **B**
- Output compressor speed > **C**

A (coefficient)	2500/256
B (W)	50
C (rps)	40

- If the error repeats, the system is shut down.
- Reset condition: Continuous run for about 60 minutes without any other error

Supposed Causes

- The installation space not large enough
- Dirty outdoor heat exchanger
- Defective outdoor fan motor
- Disconnection of the discharge pipe thermistor, indoor or outdoor heat exchanger thermistor, room or outdoor temperature thermistor
- Closed stop valve
- Refrigerant shortage (refrigerant leakage)
- Poor compression performance of compressor
- Defective electronic expansion valve

Troubleshooting

Caution Be sure to turn off the power switch before connecting or disconnecting connectors, or parts may be damaged.

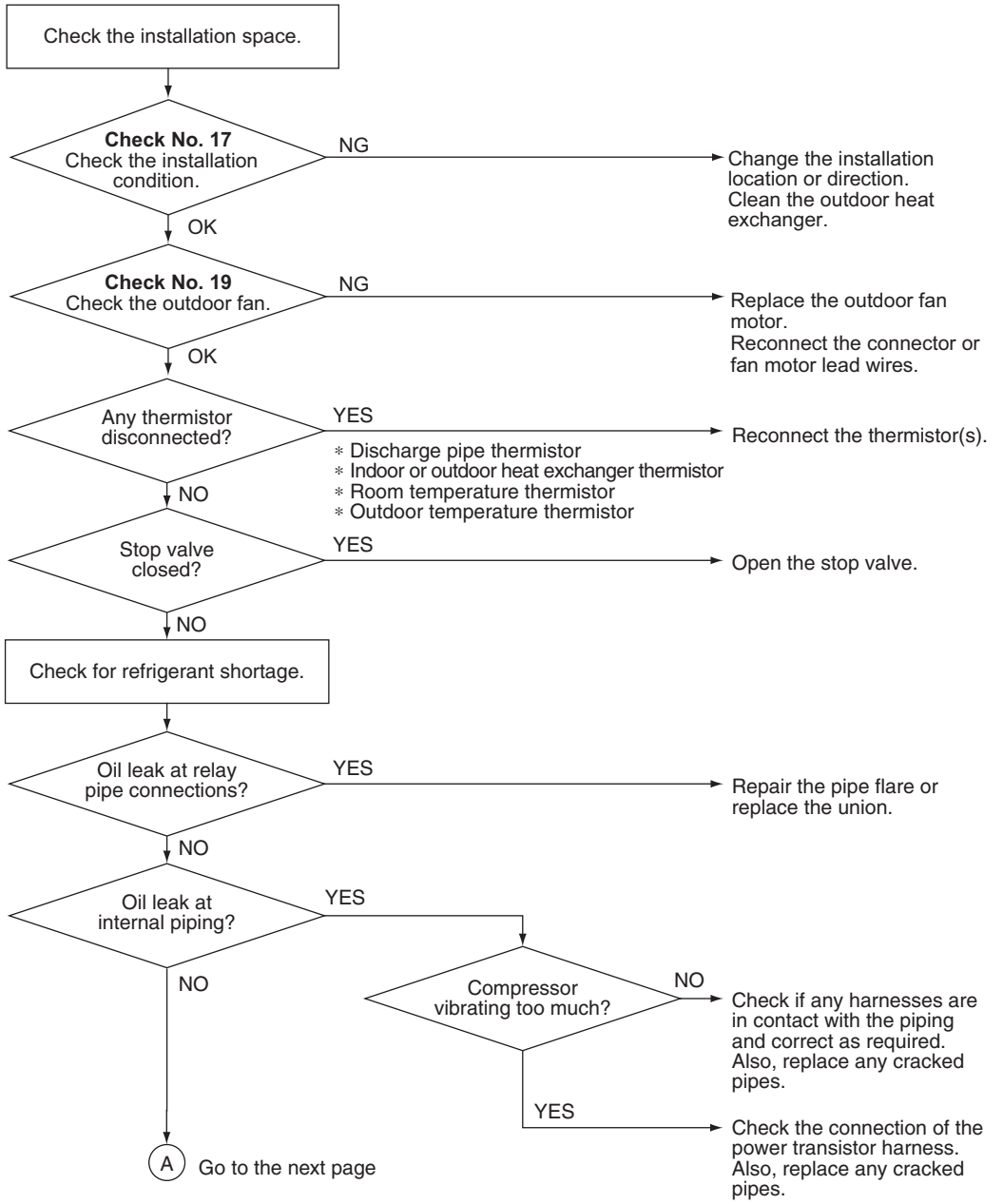

R6000442

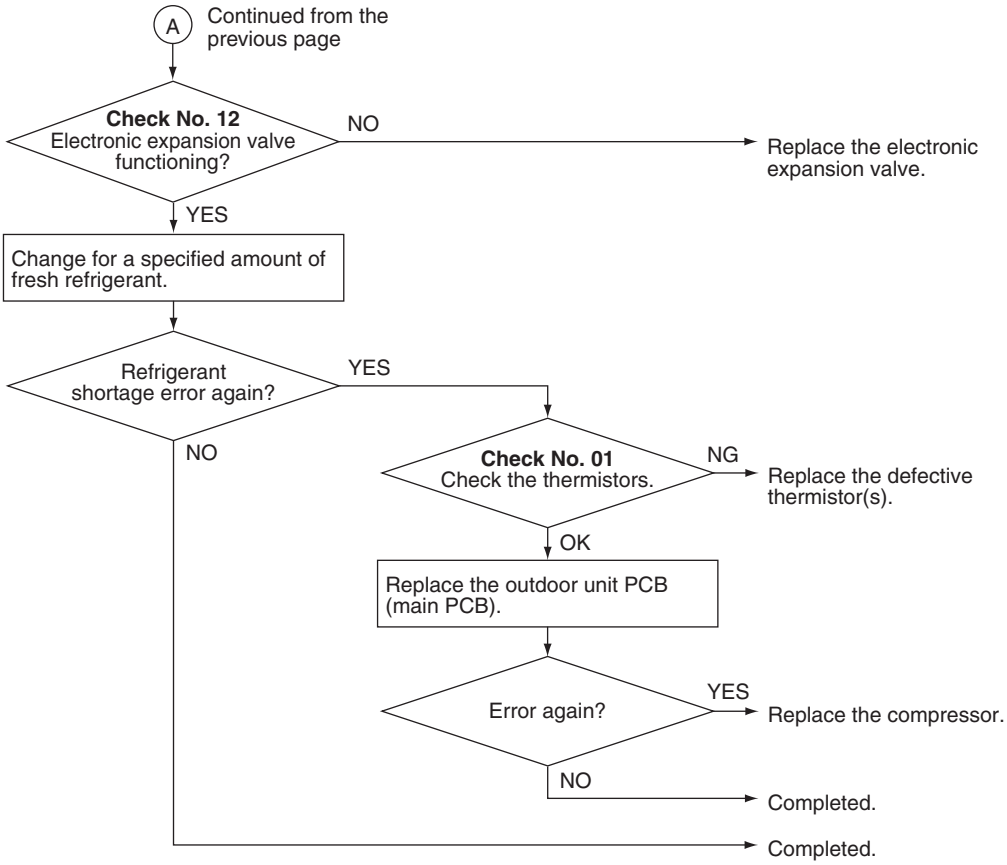

R6000552

Reference **Check No.01** Refer to P.146

Reference **Check No.12** Refer to P.148

Reference **Check No.17** Refer to P.152

Reference **Check No.19** Refer to P.153

6.2 Low-voltage Detection or Over-voltage Detection

Error Code

U2

Outdoor Unit LED Display

A ◑ 1 ☼ 2 ● 3 ● 4 ☼ 5 ●

Method of Error Detection

■ **Indoor Unit**

The zero-cross detection of the power supply is evaluated by the indoor unit PCB.

■ **Outdoor Unit**

Low-voltage detection:
An abnormal voltage drop is detected by the DC voltage detection circuit.

Over-voltage detection:
An abnormal voltage rise is detected by the over-voltage detection circuit.

Error Decision Conditions

■ **Indoor Unit**

There is no zero-cross detection in approximately 10 seconds.

■ **Outdoor Unit**

Low-voltage detection:
- The voltage detected by the DC voltage detection circuit is below **A** V for 0.1 second.
- If the error repeats, the system is shut down.
- Reset condition: Continuous run for about 60 minutes without any other error

A (V)	170

Over-voltage detection:
- An over-voltage signal is fed from the over-voltage detection circuit to the microcomputer.
- The compressor stops if the error occurs, and restarts automatically after 3-minute standby.

Supposed Causes

- Power supply voltage out of specification
- Defective DC voltage detection circuit
- Defective over-voltage detection circuit
- Defective PAM control part
- Disconnection of compressor harness
- Short circuit inside the fan motor winding
- Noise
- Momentary drop of voltage
- Momentary power failure
- Defective outdoor unit PCB
- Defective indoor unit PCB

Troubleshooting

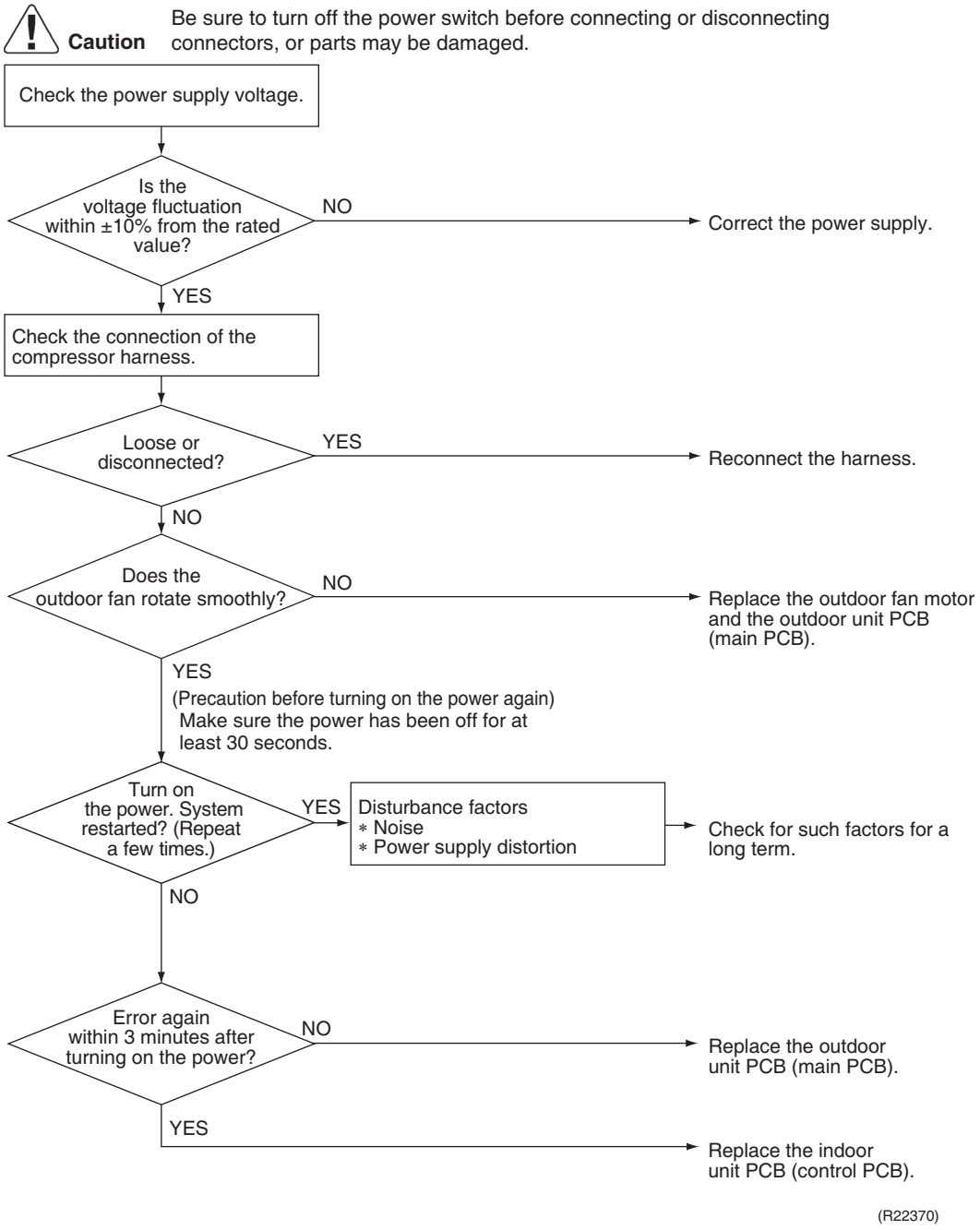

6.3 Wiring Error Check Unexecuted

Error Code

U3

Outdoor Unit LED Display

A ◑ 1 ● 2 ☼ 3 ● 4 ● 5 ●

Method of Error Detection

The system checks if wiring error check is executed after clearing the memory.

Error Decision Conditions

An error is determined when the unit is operated by the remote controller without executing wiring error check after the memory was cleared.

Supposed Causes

The wiring error switch (SW3) may have been pressed for 10 seconds or more and the memory may have been deleted. The unit cannot be operated unless wiring error check is executed.

Troubleshooting

Caution Be sure to turn off the power switch before connecting or disconnecting connectors, or parts may be damaged.

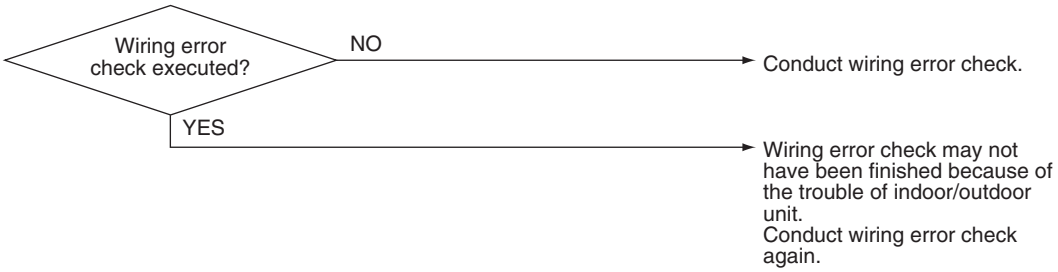

(R23952)

Reference Refer to Wiring Error Check Function on page 162 for details.

6.4 Unspecified Voltage (Between Indoor Unit and Outdoor Unit), Anti-icing Control in Other Rooms

Error Code

UA, UH

Outdoor Unit LED Display

A ◑ 1 ● 2 ● 3 ● 4 ● 5 ●

Method of Error Detection

A wrong connection is detected by checking the combination of indoor and outdoor units on the microcomputer.

Error Decision Conditions

- Anti-icing control in other rooms
- Unspecified internal and/or external voltages
- Mismatching of indoor and outdoor units

Supposed Causes

- Anti-icing function in other rooms
- Power supply voltage out of specification
- Wrong models interconnected
- Wrong indoor unit PCB or outdoor unit PCB mounted

Troubleshooting

Caution Be sure to turn off the power switch before connecting or disconnecting connectors, or parts may be damaged.

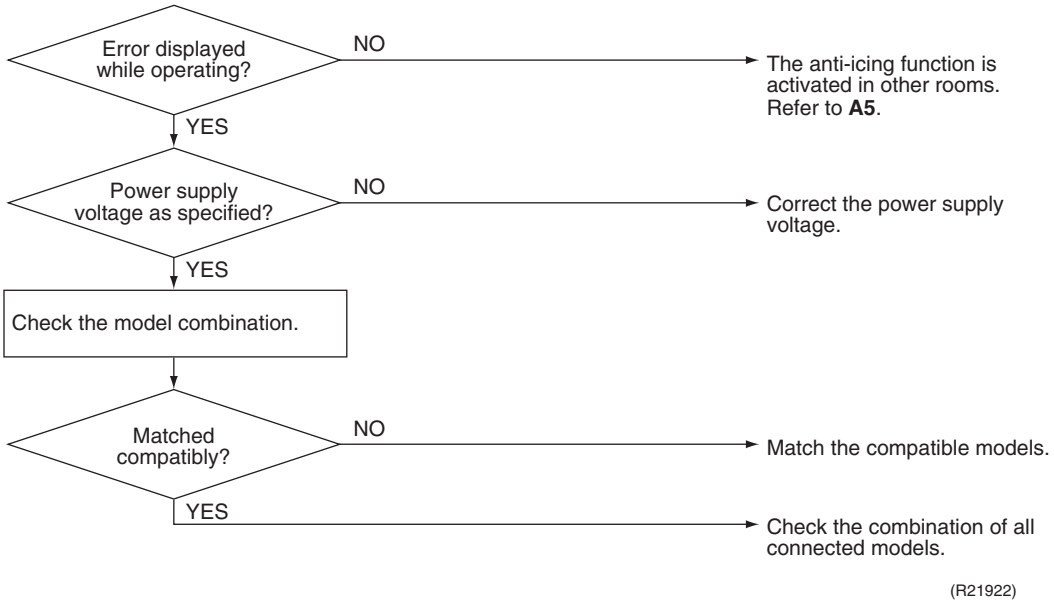

Note Refer to Anti-icing control for indoor unit on page 113 for details.

6.5 Anti-icing Control for Indoor Unit

Error Code	**A5**
Outdoor Unit LED Display	A ◑ 1 ☼ 2 ● 3 ☼ 4 ☼ 5 ●
Method of Error Detection	During cooling operation, indoor unit icing is detected by checking the temperatures sensed by the indoor heat exchanger thermistor and room temperature thermistor that are located in a shut-down room.
Error Decision Conditions	■ In cooling operation, the both conditions (A) and (B) are met for 5 minutes. (A) Room temperature – Indoor heat exchanger temperature ≥ 10°C (18°F) (B) Indoor heat exchanger temperature ≤ –1°C (30.2°F) ■ If the error repeats, the system is shut down. ■ Reset condition: 3-minute standby is over and the indoor heat exchanger temperature is above 0°C (32°F)
Supposed Causes	■ Wrong wiring or piping ■ Defective electronic expansion valve ■ Short-circuited air ■ Defective indoor heat exchanger thermistor ■ Defective room temperature thermistor

Troubleshooting

Caution Be sure to turn off the power switch before connecting or disconnecting connectors, or parts may be damaged.

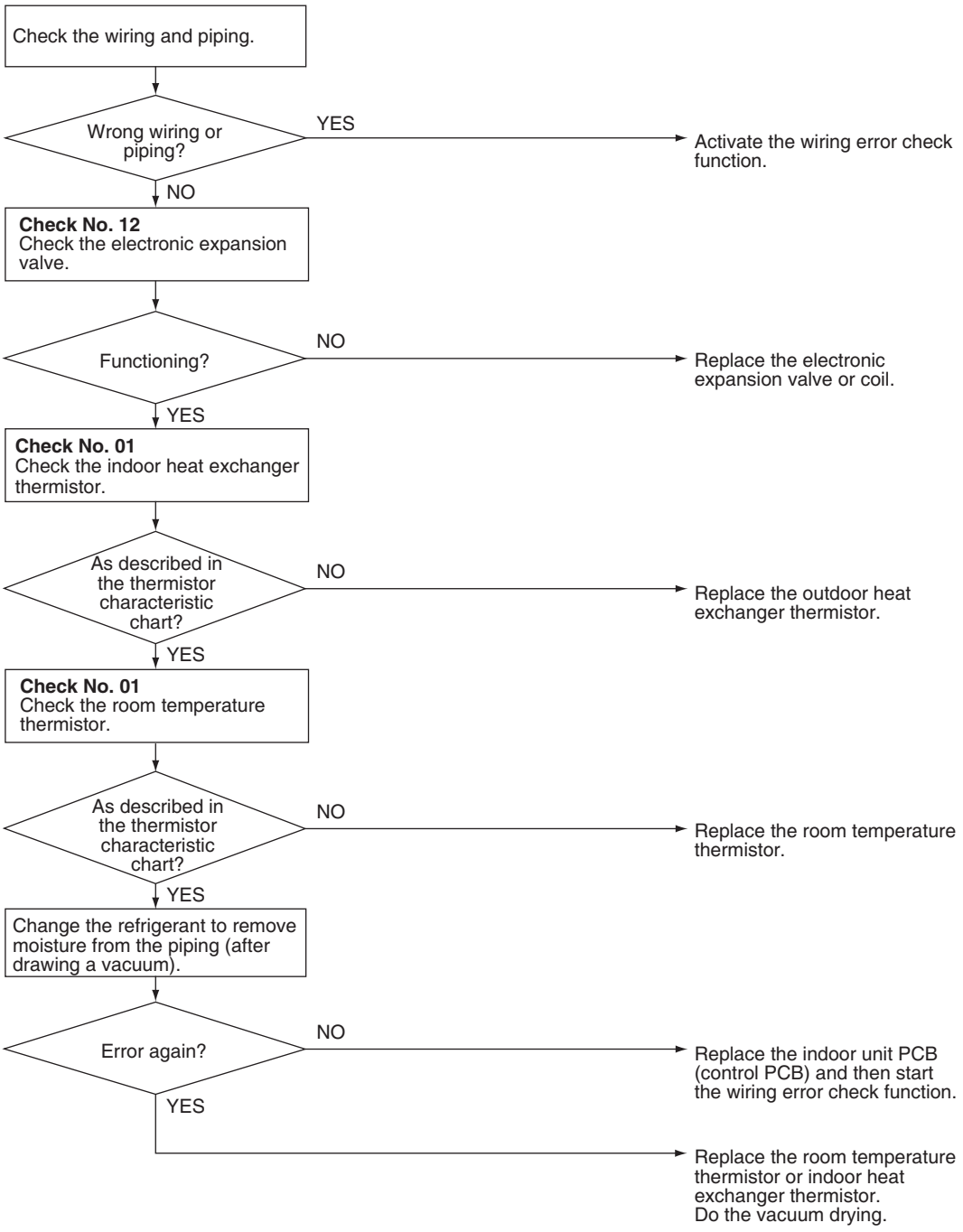

R6001320

Reference **Check No.01** Refer to P.146

Reference **Check No.12** Refer to P.148

6.6 Outdoor Unit PCB Abnormality

Error Code

E1

Outdoor Unit LED Display

A ◑ 1 ☼ 2 ☼ 3 ☼ 4 ● 5 ●

Method of Error Detection

Detect within the program of the microcomputer.

Error Decision Conditions

The program of the microcomputer is in abnormal running order.

Supposed Causes

- Defective outdoor unit PCB
- Defective electronic expansion valve driver
- Defective IGBT temperature detection thermistor circuit
- Defective Fan IPM temperature detection thermistor circuit
- Fan IPM temperature error
- IGBT temperature error
- ACS transmission error
- Communication error between PCBs
- Noise
- Momentary drop of voltage
- Momentary power failure

Troubleshooting

Caution Be sure to turn off the power switch before connecting or disconnecting connectors, or parts may be damaged.

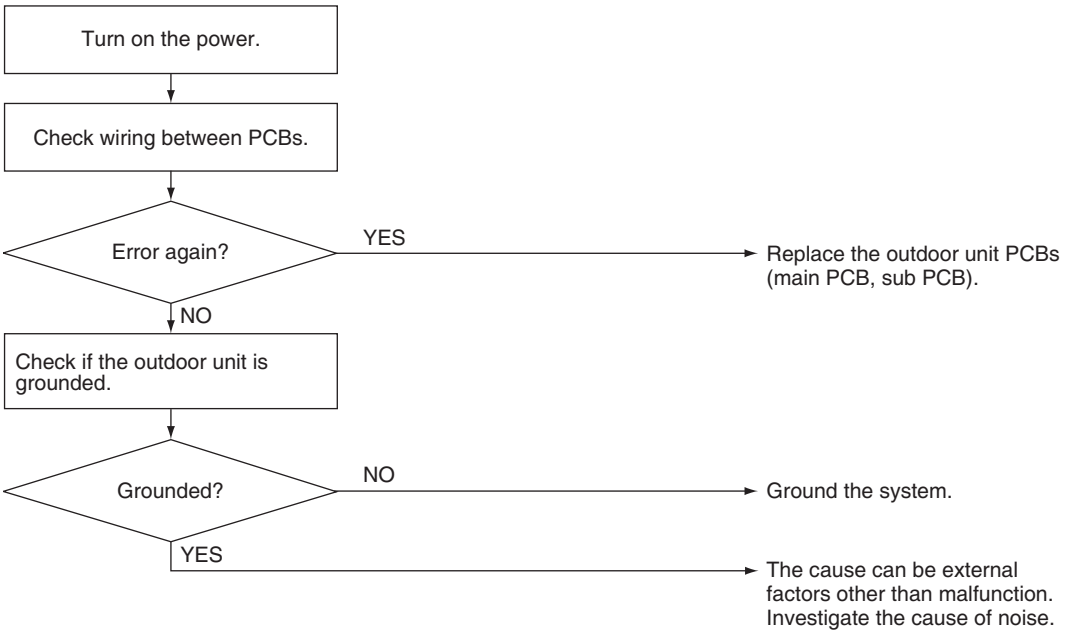

R6001191

6.7 Actuation of High Pressure Switch

Error Code

E3

Outdoor Unit LED Display

A ◑ 1 ☼ 2 ● 3 ● 4 ● 5 ●

Method of Error Detection

Abnormality is detected when the contact of the high pressure switch opens.

Error Decision Conditions

- High pressure switch (S1PH) activating pressure: 4.15 MPa
- High pressure switch (S1PH) recovery pressure: 3.2 MPa

Supposed Causes

- Actuation of high pressure switch (S1PH)
- Closed stop valve
- Disconnection of connector X820A or S40
- Disconnection of 2 terminals of high pressure switch (S1PH)
- Defective outdoor unit PCB
- Broken S1PH harness
- Defective high pressure switch (S1PH)

Troubleshooting

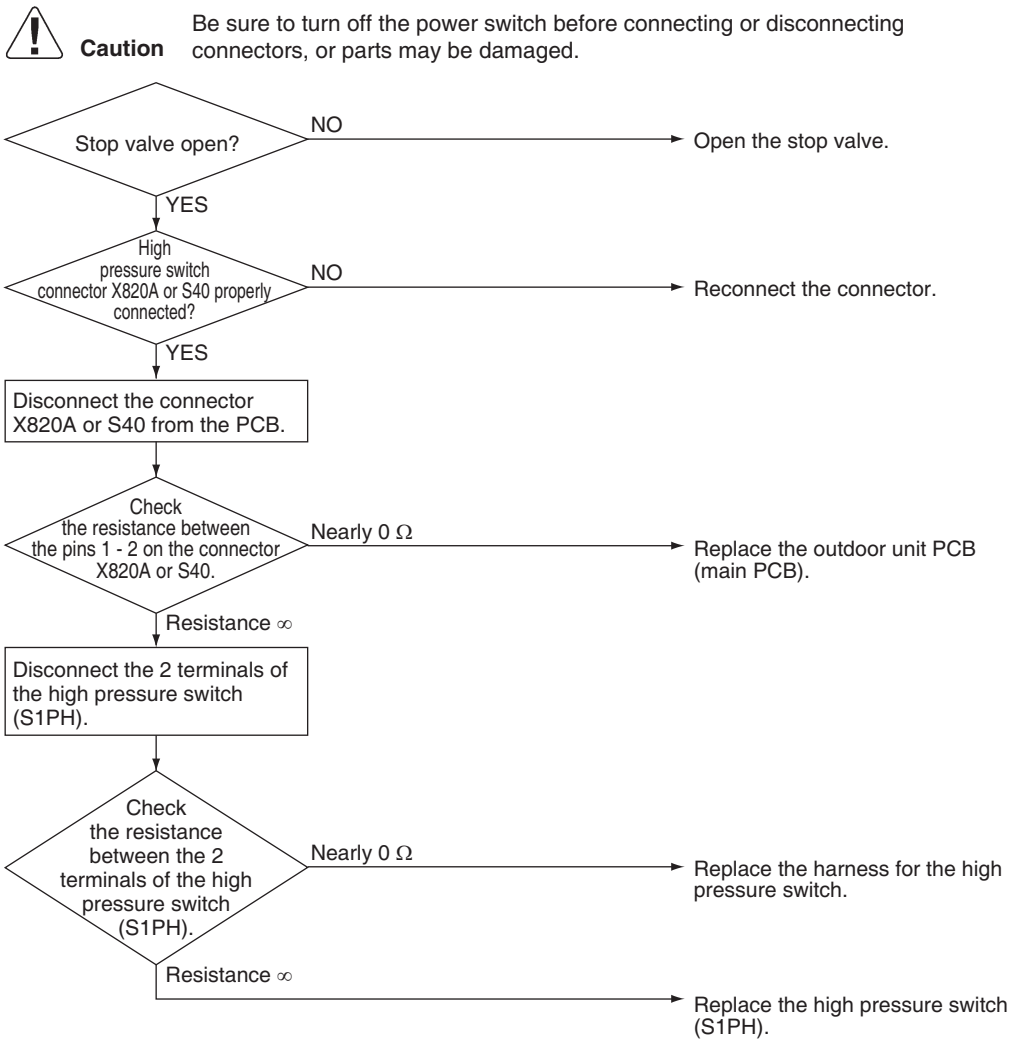

R6001170

6.8 OL Activation (Compressor Overload)

Error Code	**E5**
Outdoor Unit LED Display	A ◑ 1 ☼ 2 ● 3 ☼ 4 ● 5 ●
Method of Error Detection	A compressor overload is detected through compressor OL.
Error Decision Conditions	■ If the error repeats, the system is shut down. ■ Reset condition: Continuous run for about 60 minutes without any other error
Supposed Causes	■ Disconnection of discharge pipe thermistor ■ Defective discharge pipe thermistor ■ Disconnection of connector X820A or S40 ■ Disconnection of 2 terminals of OL (Q1M) ■ Defective OL (Q1M) ■ Broken OL harness ■ Defective electronic expansion valve or coil ■ Defective four way valve or coil ■ Defective outdoor unit PCB ■ Refrigerant shortage ■ Water mixed in refrigerant ■ Defective stop valve

Troubleshooting

Caution Be sure to turn off the power switch before connecting or disconnecting connectors, or parts may be damaged.

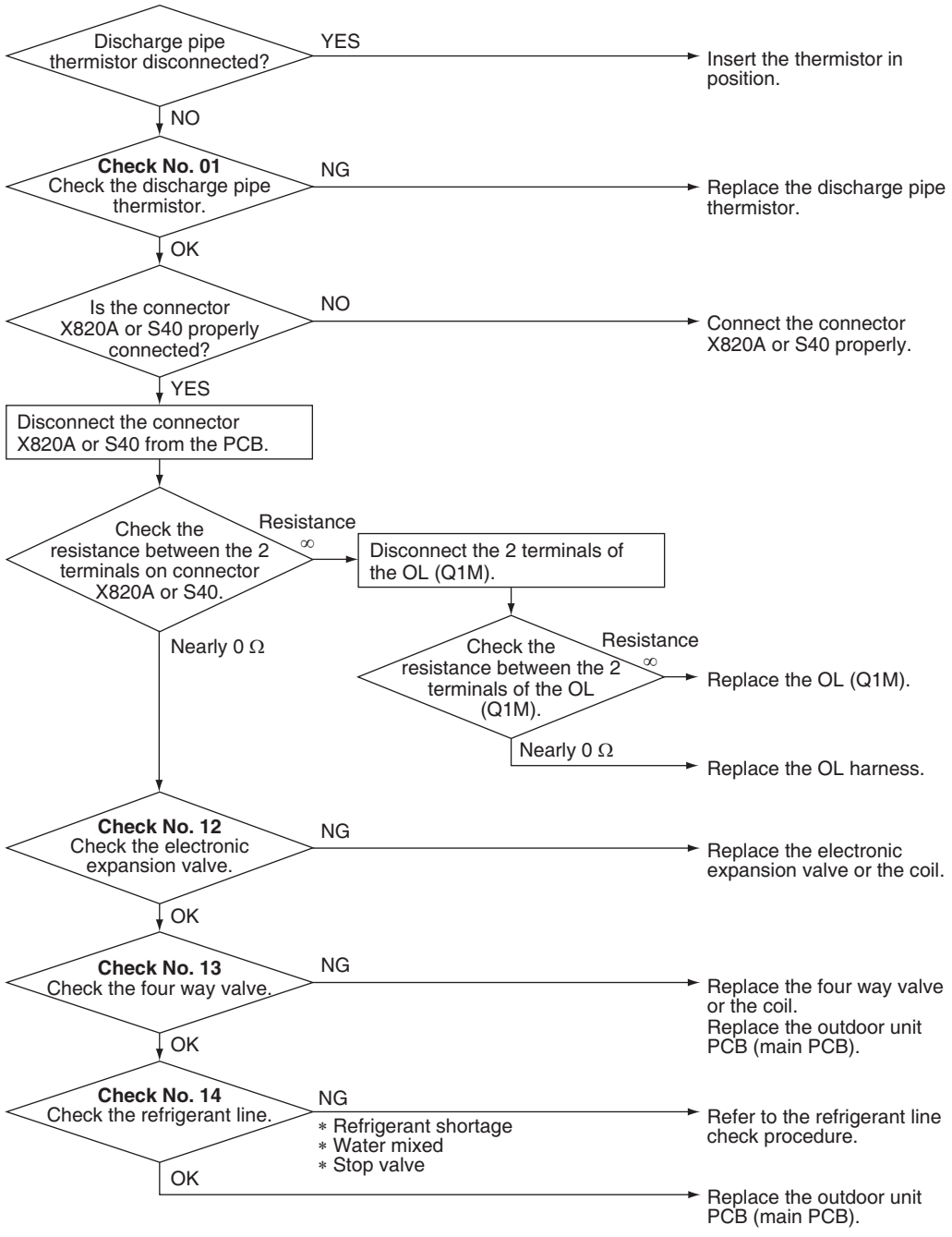

R6001171

Notes
OL (Q1M) activating temperature: 125°C (257°F)
OL (Q1M) activating temperature: 110°C (230°F)

Reference **Check No.01** Refer to P.146

Reference **Check No.12** Refer to P.148

Reference **Check No.13** Refer to P.149

Reference **Check No.14** Refer to P.149

6.9 Compressor Lock

Error Code	**E6**
Outdoor Unit LED Display	A ◑ 1 ● 2 ☼ 3 ☼ 4 ● 5 ●
Method of Error Detection	A compressor lock is detected by checking the compressor running condition through the position detection circuit.
Error Decision Conditions	■ Judging from the current waveform generated when high-frequency voltage is applied to the compressor. ■ If the error repeats, the system is shut down. ■ Reset condition: Continuous run for about 5 minutes without any other error
Supposed Causes	■ Closed stop valve ■ Defective outdoor unit PCB ■ Defective compressor ■ Defective electronic expansion valve

Troubleshooting

Caution Be sure to turn off the power switch before connecting or disconnecting connectors, or parts may be damaged.

(Precaution before turning on the power again)
Make sure the power has been off for at least 30 seconds.

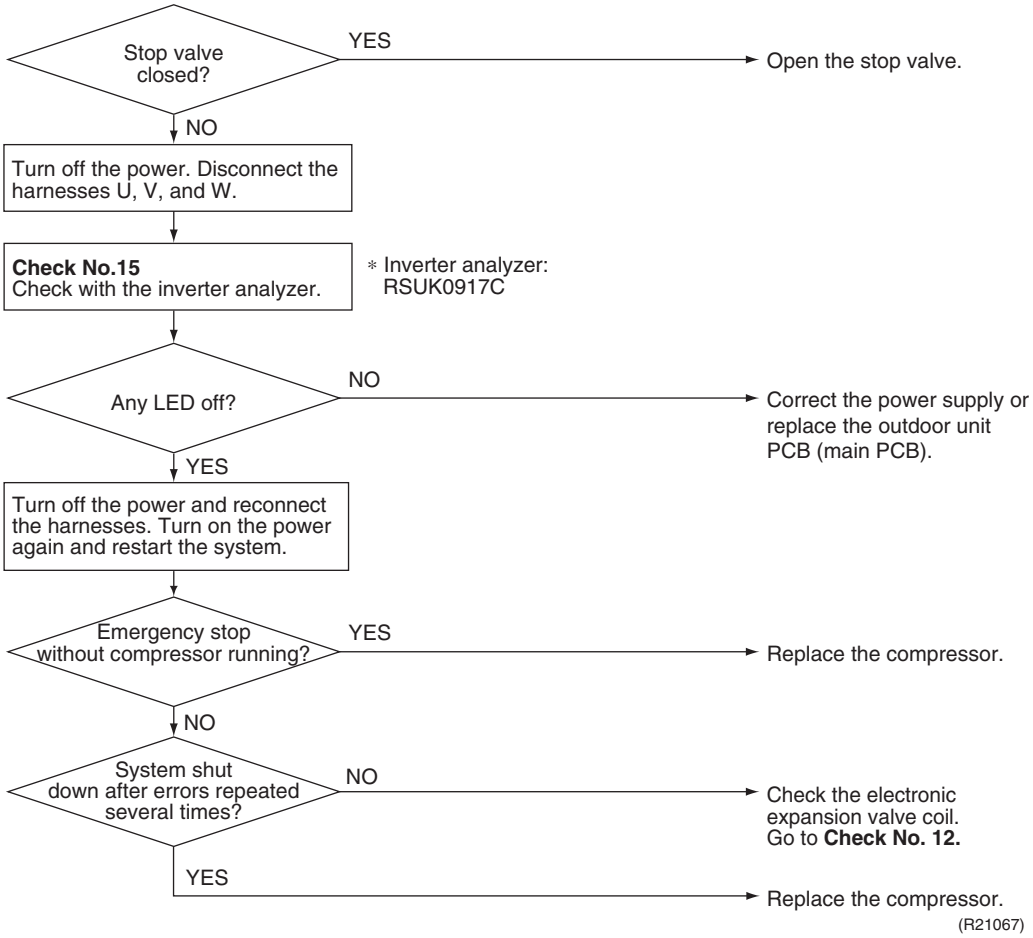

(R21067)

Reference **Check No.12** Refer to P.148

Reference **Check No.15** Refer to P.150

6.10 DC Fan Lock

Error Code **E7**

Outdoor Unit LED Display A ◑ 1 ☼ 2 ☼ 3 ☼ 4 ☼ 5 ●

Method of Error Detection An error is determined when actual rotation speed per second (rps) is significantly apart from instructed rotation speed.

Error Decision Conditions
- The fan does not start in 30 seconds even when the fan motor is running.
- If the error repeats, the system is shut down.
- Reset condition: Continuous run for about 5 minutes without any other error

Supposed Causes
- Disconnection of the fan motor
- Foreign matter stuck in the fan
- Defective fan motor
- Defective outdoor unit PCB

Troubleshooting

Caution Be sure to turn off the power switch before connecting or disconnecting connectors, or parts may be damaged.

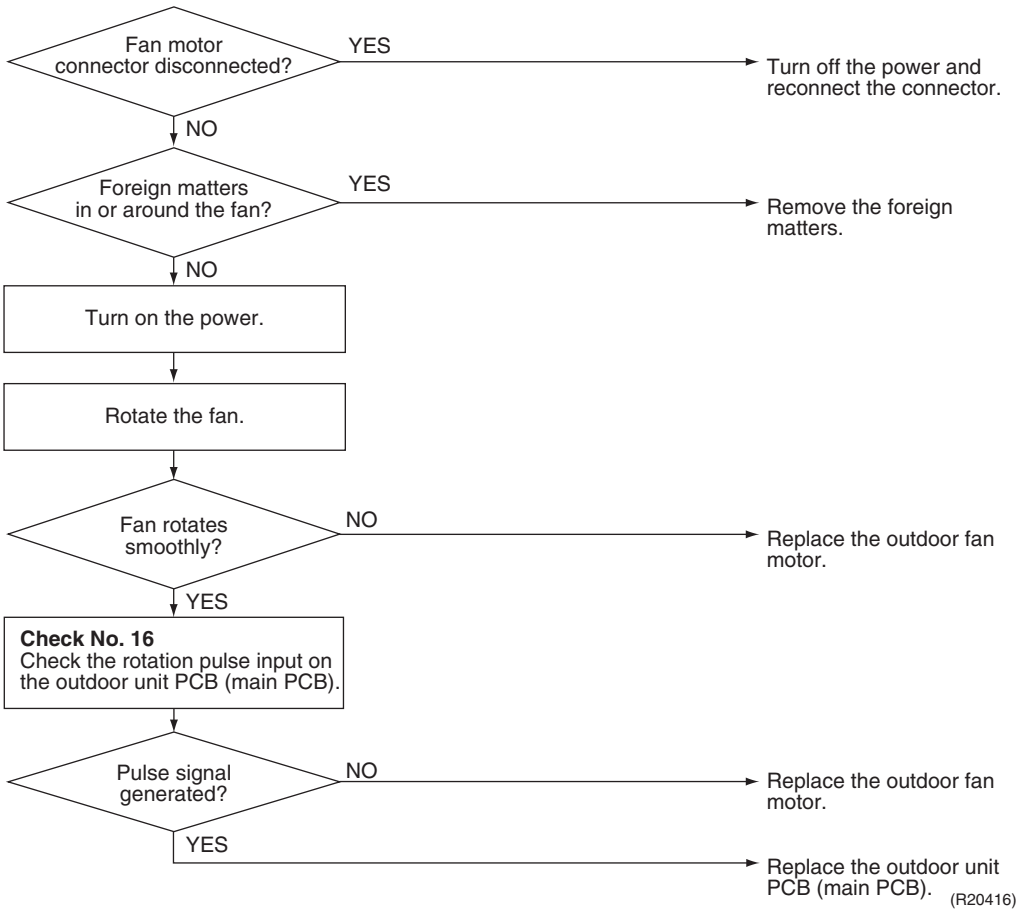

Reference **Check No.16** Refer to P.151

6.11 Input Overcurrent Detection

Error Code	**E8**
Outdoor Unit LED Display	A ◑ 1 ● 2 ☼ 3 ● 4 ☼ 5 ●
Method of Error Detection	Detected by checking the input current value
Error Decision Conditions	■ The input current is at a certain value (depending on the condition) for 2.5 seconds. ■ The compressor halts if the error occurs, and restarts automatically after 3-minute standby.
Supposed Causes	■ Outdoor temperature is out of operation range. ■ Defective compressor ■ Defective power module ■ Defective outdoor unit PCB ■ Short circuit

Troubleshooting

Caution Be sure to turn off the power switch before connecting or disconnecting connectors, or parts may be damaged.

* An input overcurrent may result from wrong internal wiring. If the system is interrupted by an input overcurrent after the wires have been disconnected and reconnected for part replacement, check the wiring again.

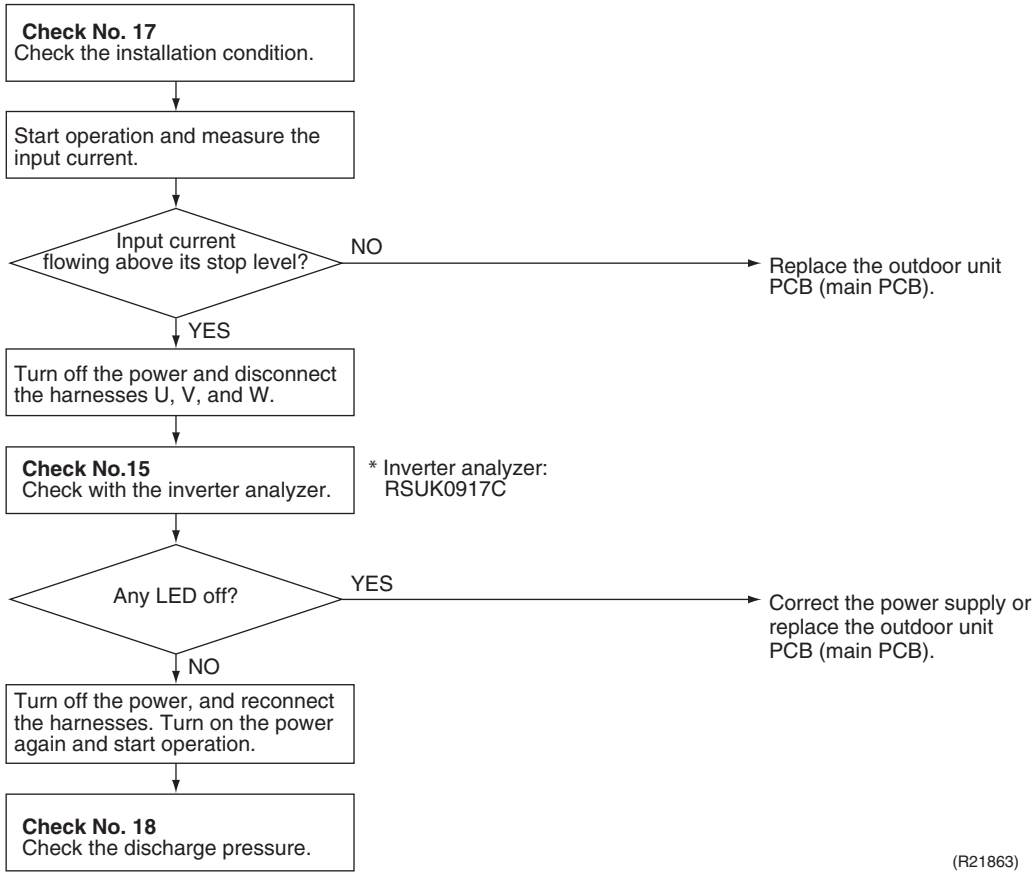

Reference **Check No.15** Refer to P.150

Reference **Check No.17** Refer to P.152

Reference **Check No.18** Refer to P.152

6.12 Electronic Expansion Valve Coil Abnormality

Error Code **E9**

Outdoor Unit LED Display A ◑ 1 ● 2 ● 3 ● 4 ● 5 ☼

Method of Error Detection Detect errors based on check of continuity of the electronic expansion valve.

Error Decision Conditions
- High input voltage from electronic expansion valve to the microcomputer due to overcurrent.
- Low input voltage from electronic expansion valve to the microcomputer due to disconnected connectors.

Supposed Causes
- Defective electronic expansion coil
- Broken harness of electronic expansion coil
- Defective connection of electronic expansion coil connector
- Defective outdoor unit main PCB

Troubleshooting

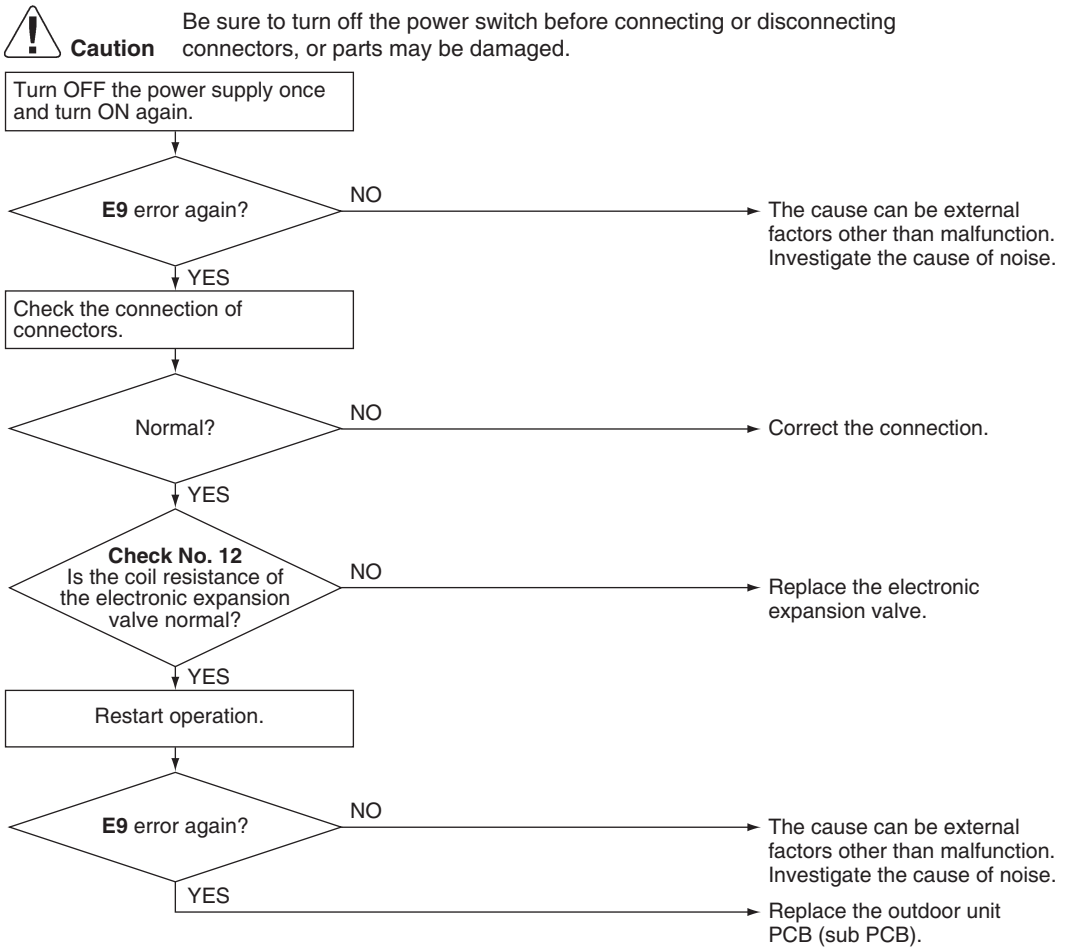

R6001181

Reference **Check No.12** Refer to P.148

6.13 Four Way Valve Abnormality

Error Code

EA

Outdoor Unit LED Display

A ◑ 1 ☼ 2 ● 3 ● 4 ● 5 ●

Method of Error Detection

Detects whether the four-way valve is switching normally by the indoor heat exchanger temperature.

Error Decision Conditions

The following condition continues for **A** seconds after the compressor has started.

- Cooling operation
  The lowest indoor heat exchanger temperature > 45°C (113°F)
- Heating operation
  The highest indoor heat exchanger temperature < 0°C (32°F)

			2/3/4MXM 2MXT(H)	5MXM 3/4/5MXT(H)
A (seconds)	Cooling		240	680
	Heating	outdoor temperature ≥ –15°C (5°F)	240	680
		outdoor temperature < –15°C (5°F)	460	680

Tde: outdoor heat exchanger temperature

Supposed Causes

- Disconnection of four way valve coil
- Defective four way valve, coil, or harness
- Defective outdoor unit PCB
- Defective thermistor
- Refrigerant shortage
- Water mixed in refrigerant
- Defective stop valve

Troubleshooting

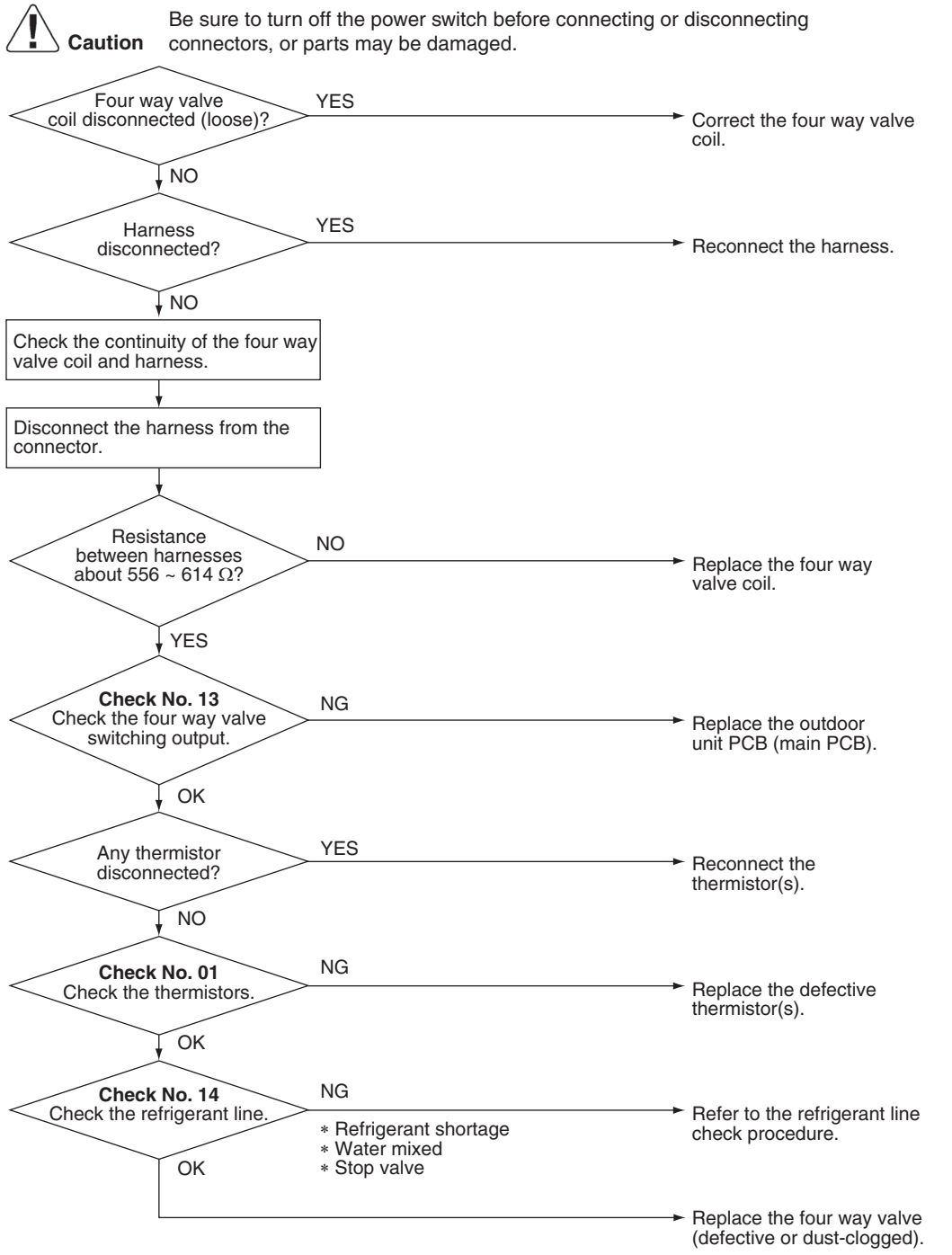

R6001164

Reference **Check No.01** Refer to P.146

Reference **Check No.13** Refer to P.149

Reference **Check No.14** Refer to P.149

6.14 Discharge Pipe Temperature Control

Error Code

F3

Outdoor Unit LED Display

A ◑ 1 ☼ 2 ● 3 ☼ 4 ● 5 ●

Method of Error Detection

An error is determined with the temperature detected by the discharge pipe thermistor.

Error Decision Conditions

- If the temperature detected by the discharge pipe thermistor rises above **A**, the compressor stops.
- The error is cleared when the discharge pipe temperature is dropped below **B**.
- If the error repeats, the system is shut down.
- Reset condition: Continuous run for about 60 minutes without any other error

	°C	°F
A	120	248
B	107	224.6

Supposed Causes

- Defective discharge pipe thermistor
  (Defective outdoor heat exchanger thermistor or outdoor temperature thermistor)
- Defective electronic expansion valve or coil
- Refrigerant shortage
- Defective four way valve
- Water mixed in refrigerant
- Defective stop valve
- Defective outdoor unit PCB

Troubleshooting

Caution Be sure to turn off the power switch before connecting or disconnecting connectors, or parts may be damaged.

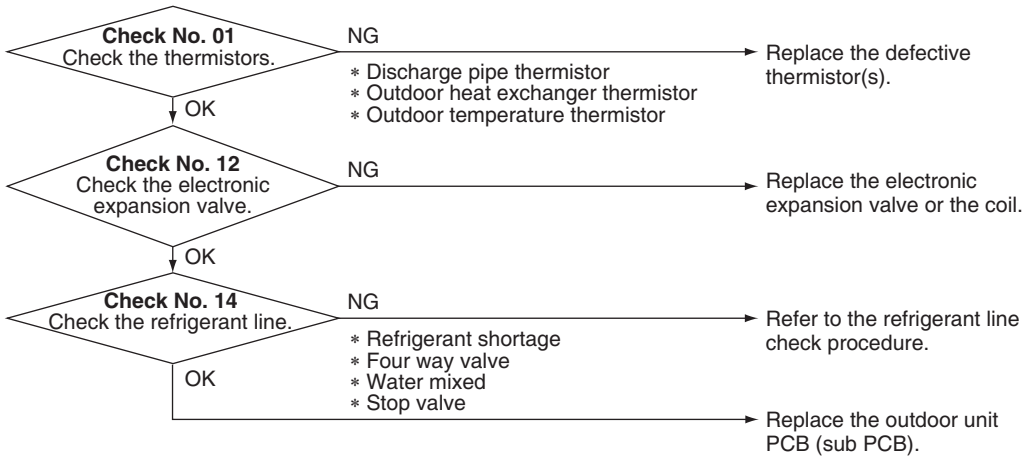

R6001193

Reference **Check No.01** Refer to P.146

Reference **Check No.12** Refer to P.148

Reference **Check No.14** Refer to P.149

6.15 High Pressure Control in Cooling

Error Code

F6

Outdoor Unit LED Display

A ◑ 1 ☼ 2 ● 3 ☼ 4 ☼ 5 ●

Method of Error Detection

High pressure control (operation halt, compressor speed drop, etc.) is activated in cooling operation if the temperature sensed by the outdoor heat exchanger thermistor exceeds the limit.

Error Decision Conditions

- The temperature sensed by the outdoor heat exchanger thermistor rises above about **A**.
- The error is cleared when the temperature drops below about **B**.

	°C	°F
A	59	138.2
B	50	122

Supposed Causes

- The installation space not large enough
- Dirty outdoor heat exchanger
- Defective outdoor fan motor
- Defective stop valve
- Defective electronic expansion valve or coil
- Defective outdoor heat exchanger thermistor
- Defective outdoor unit PCB

Troubleshooting

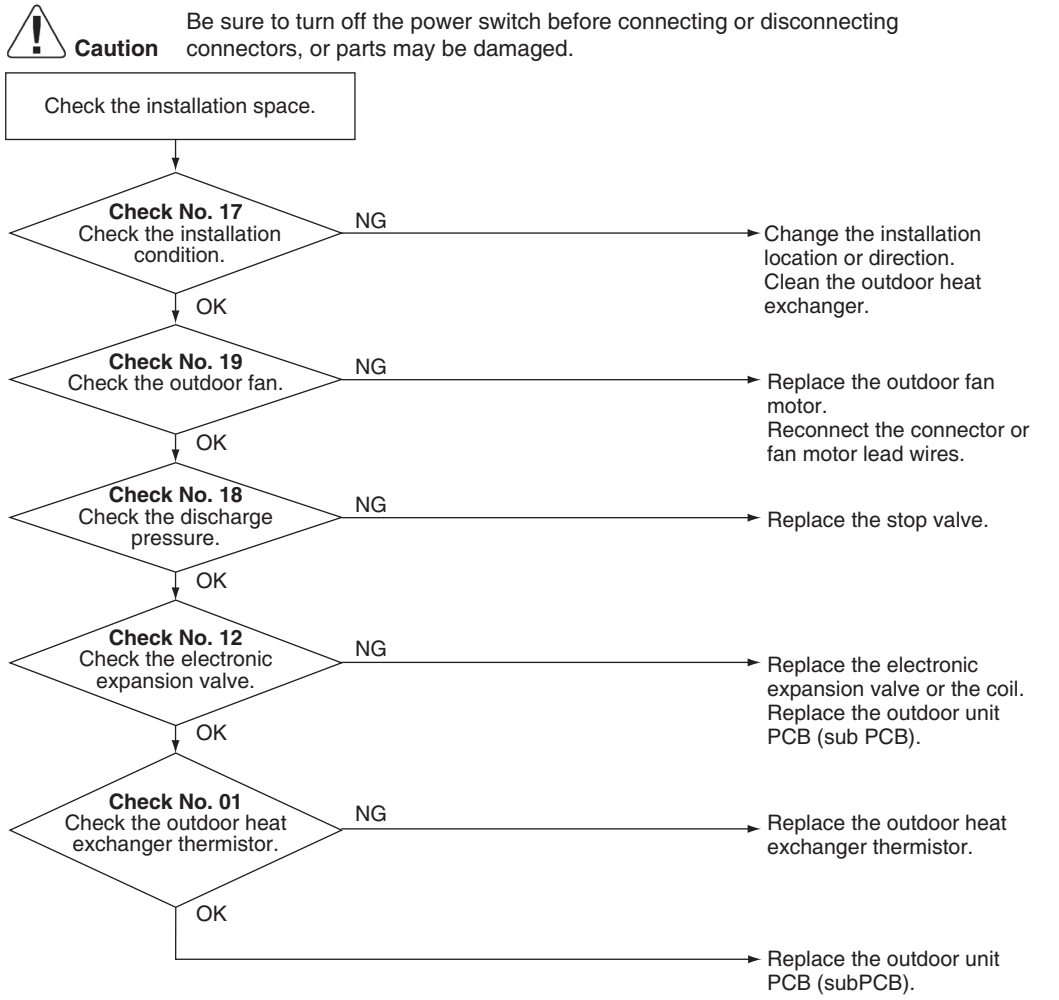

Reference **Check No.01** Refer to P.146

Reference **Check No.12** Refer to P.148

Reference **Check No.17** Refer to P.152

Reference **Check No.18** Refer to P.152

Reference **Check No.19** Refer to P.153

6.16 System Shutdown due to Temperature Abnormality in the Compressor

Error Code **F8**

Outdoor Unit LED Display A ◑ 1 ● 2 ● 3 ☼ 4 ☼ 5 ●

Method of Error Detection Operation is halted when the temperature detected by the discharge pipe thermistor exceeds the determined limit.

Error Decision Conditions Temperature exceeds the detection threshold of 127.5°C (261.5°F) during forced cooling operation.

Supposed Causes
- Abnormal operation due to air intrusion
- Defective discharge pipe thermistor

Troubleshooting

Caution Be sure to turn off the power switch before connecting or disconnecting connectors, or parts may be damaged.

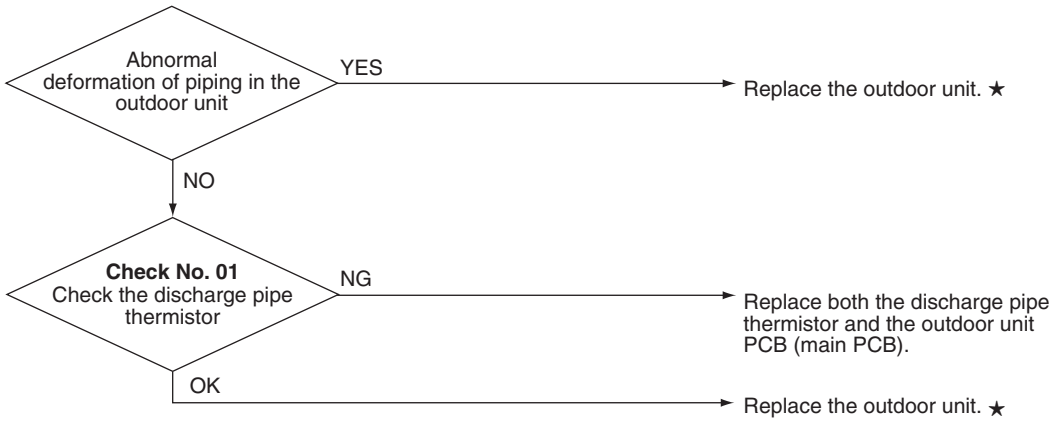

★ Replace the unit as directed in the installation manual, making sure that air does not intrude into the refrigerant piping.

(R23655)

Reference **Check No.01** Refer to P.146

6.17 Compressor Sensor System Abnormality

Error Code

H0

Outdoor Unit LED Display

A ◑ 1 ☼ 2 ☼ 3 ● 4 ● 5 ●

Method of Error Detection

- The system checks the power supply voltage and the DC voltage before the compressor starts.
- The system checks the DC current of the compressor right after the compressor starts.

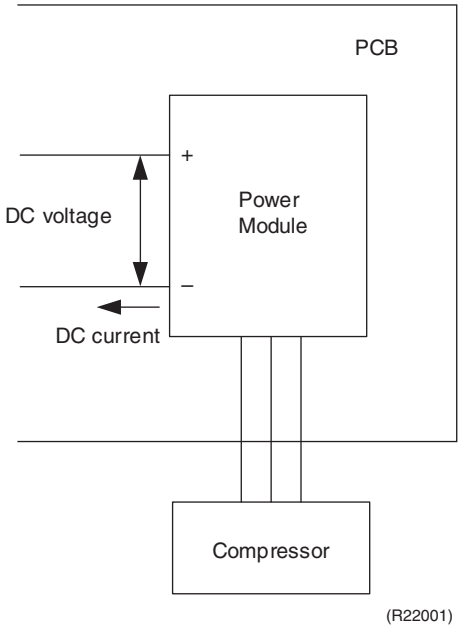

Error Decision Conditions

- The power supply voltage and the DC voltage is obviously low or high.
- The DC current of the compressor does not flow when the compressor starts.

Supposed Causes

- Disconnection of reactor
- Disconnection of compressor harness
- Defective outdoor unit PCB
- Defective compressor

Troubleshooting

Caution Be sure to turn off the power switch before connecting or disconnecting connectors, or parts may be damaged.

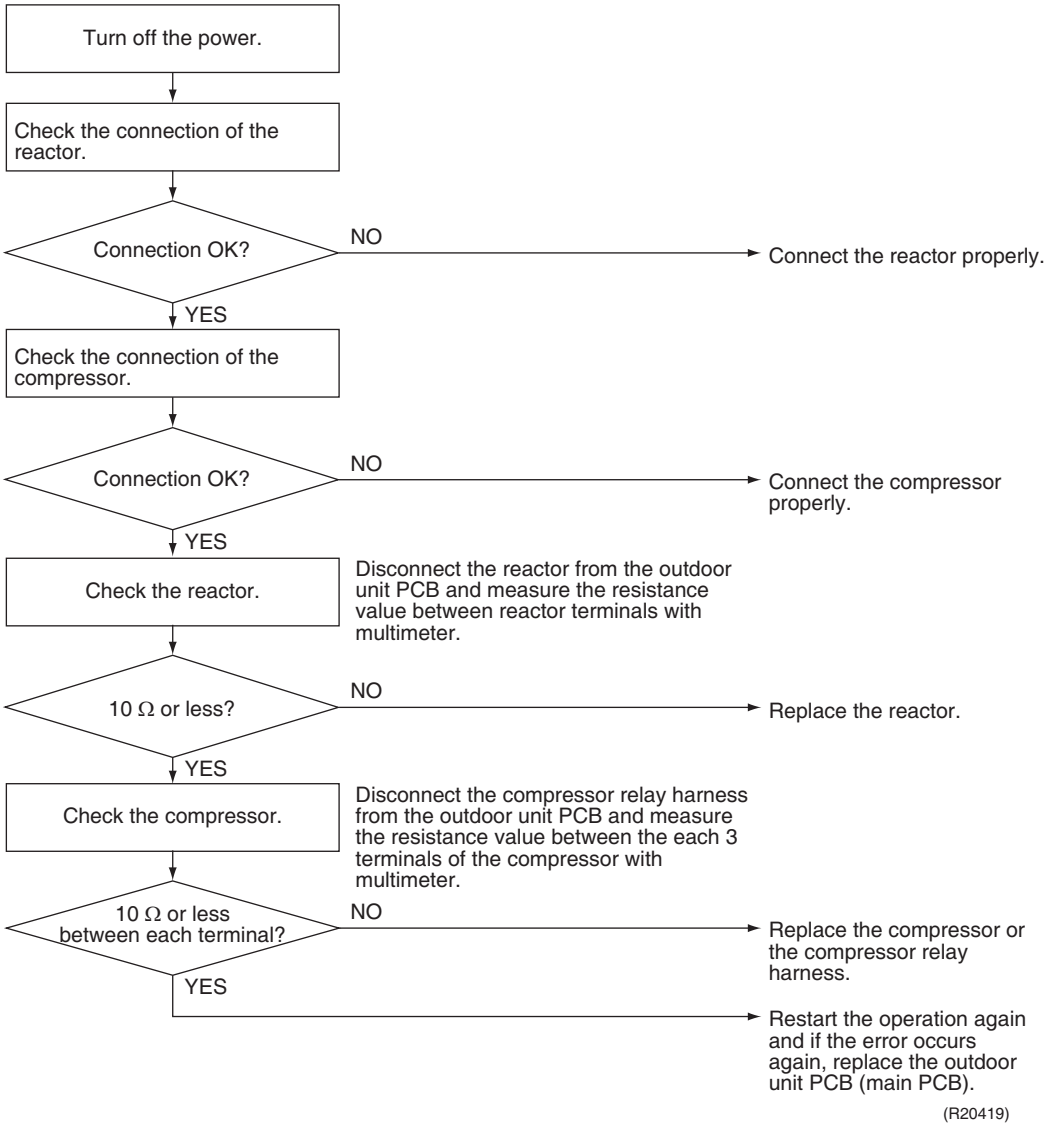

(R20419)

6.18 High Pressure Switch System Abnormality

Error Code **H3**

Outdoor Unit LED Display A ◑ 1 ☼ 2 ☼ 3 ● 4 ● 5 ●

Method of Error Detection The protection device circuit cheeks continuity in the high pressure switch.

Error Decision Conditions There is no continuity in the high pressure switch when the compressor stops operating.

Supposed Causes

- Defective high pressure switch
- Defective connection of high pressure switch connector
- Defective outdoor unit main PCB
- Disconnected lead wire

Troubleshooting

Caution Be sure to turn off the power switch before connecting or disconnecting connectors, or parts may be damaged.

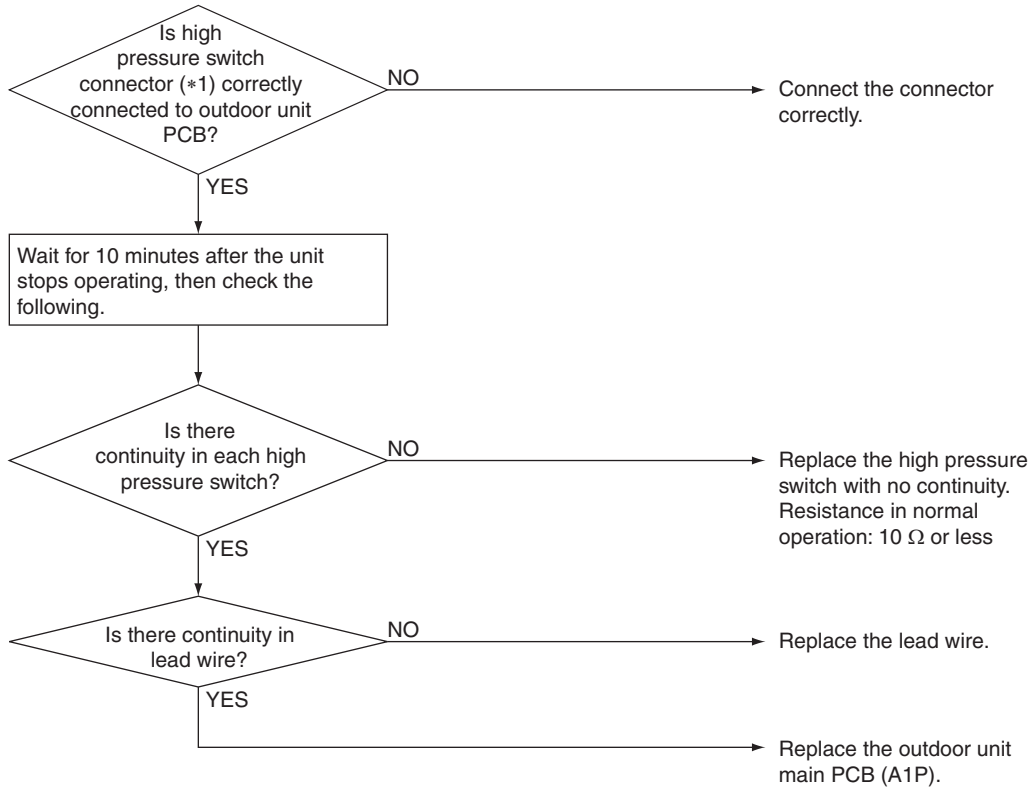

R6001112

Note(s) ∗1. Connector and high pressure switch

High pressure switch	Connector for high pressure switch	Activation pressure
S1PH	X820A or S40	4.15 MPa

6.19 Position Sensor Abnormality

Error Code **H6**

Outdoor Unit LED Display A ◑ 1 ☼ 2 ☼ 3 ● 4 ● 5 ●

Method of Error Detection A compressor start-up failure is detected by checking the compressor running condition through the position detection circuit.

Error Decision Conditions
- If the error repeats, the system is shut down.
- Reset condition: Continuous run for about 5 minutes without any other error

Supposed Causes
- Power supply voltage out of specification
- Disconnection of the compressor harness
- Defective compressor
- Defective outdoor unit PCB
- Start-up failure caused by the closed stop valve
- Input voltage outside the specified range

Troubleshooting

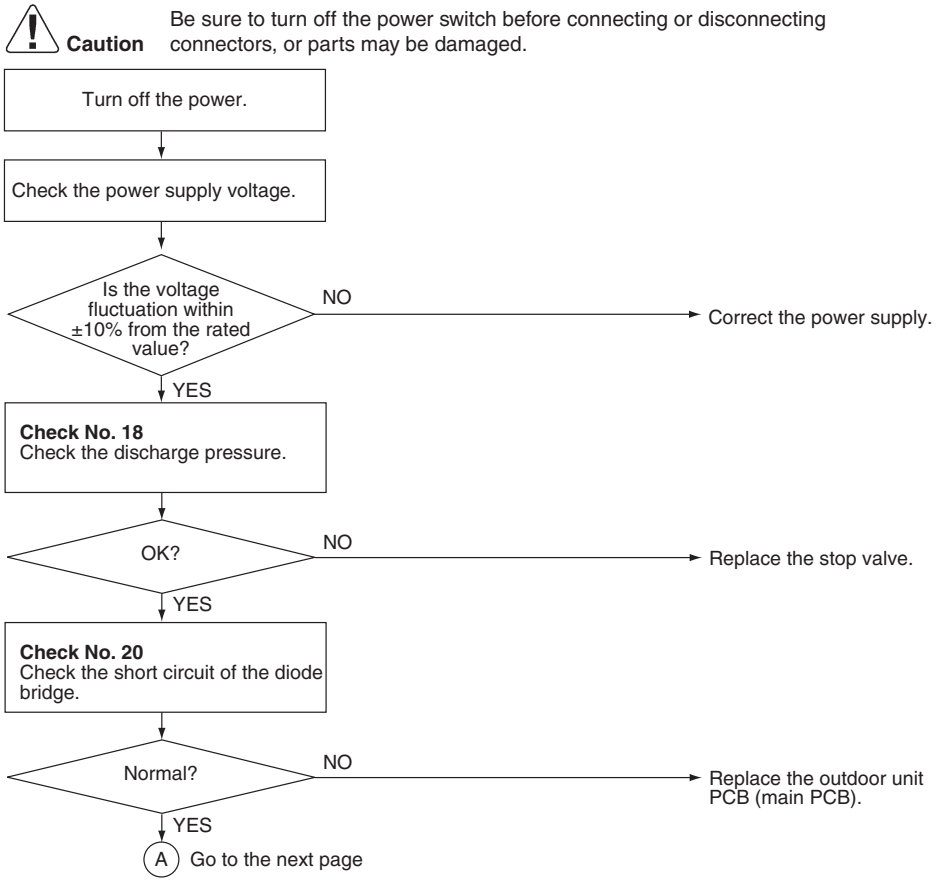

R6001174

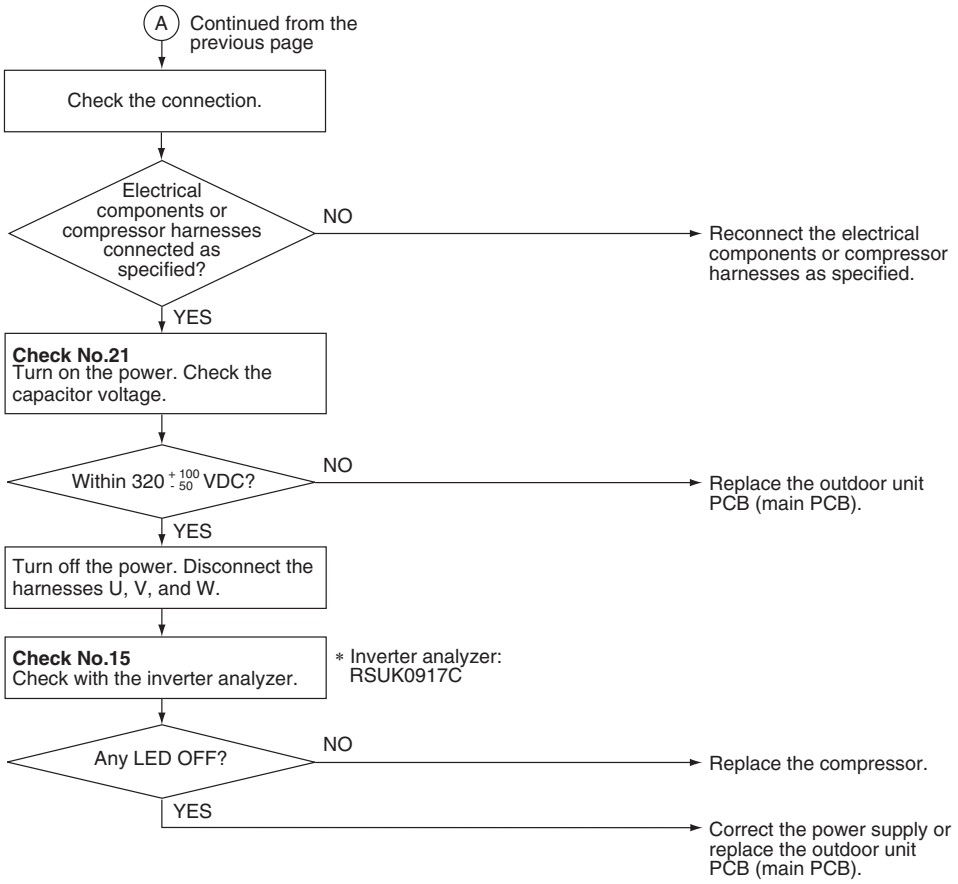

R6001175

Reference **Check No.15** Refer to P.150

Reference **Check No.18** Refer to P.152

Reference **Check No.20** Refer to P.153

Reference **Check No.21** Refer to P.155

6.20 Thermistor or Related Abnormality (Outdoor Unit)

Error Code

H9, J3, J6, J8, J9, P4

Outdoor Unit LED Display

A ◑ 1 ☼ 2 ☼ 3 ● 4 ● 5 ●

Method of Error Detection

This fault is identified based on the thermistor input voltage to the microcomputer.
A thermistor fault is identified based on the temperature sensed by each thermistor.

Error Decision Conditions

- The voltage between the both ends of the thermistor is above 4.96 V or below 0.04 V with the power on.
- **J3** error is judged if the discharge pipe temperature is lower than the heat exchanger temperature.
- The system is shut down if all the units are judged as the **J8** error.

Supposed Causes

- Disconnection of the connector for the thermistor
- Defective thermistor(s)
- Defective heat exchanger thermistor in the case of **J3** error (outdoor heat exchanger thermistor in cooling operation, or indoor heat exchanger thermistor in heating operation)
- Defective outdoor unit PCB

Troubleshooting

In case of P4

Caution Be sure to turn off the power switch before connecting or disconnecting connectors, or parts may be damaged.

Replace the outdoor unit PCB (main PCB).

P4 : Radiation fin thermistor

Troubleshooting

In case of H9, J3, J6, J8, J9

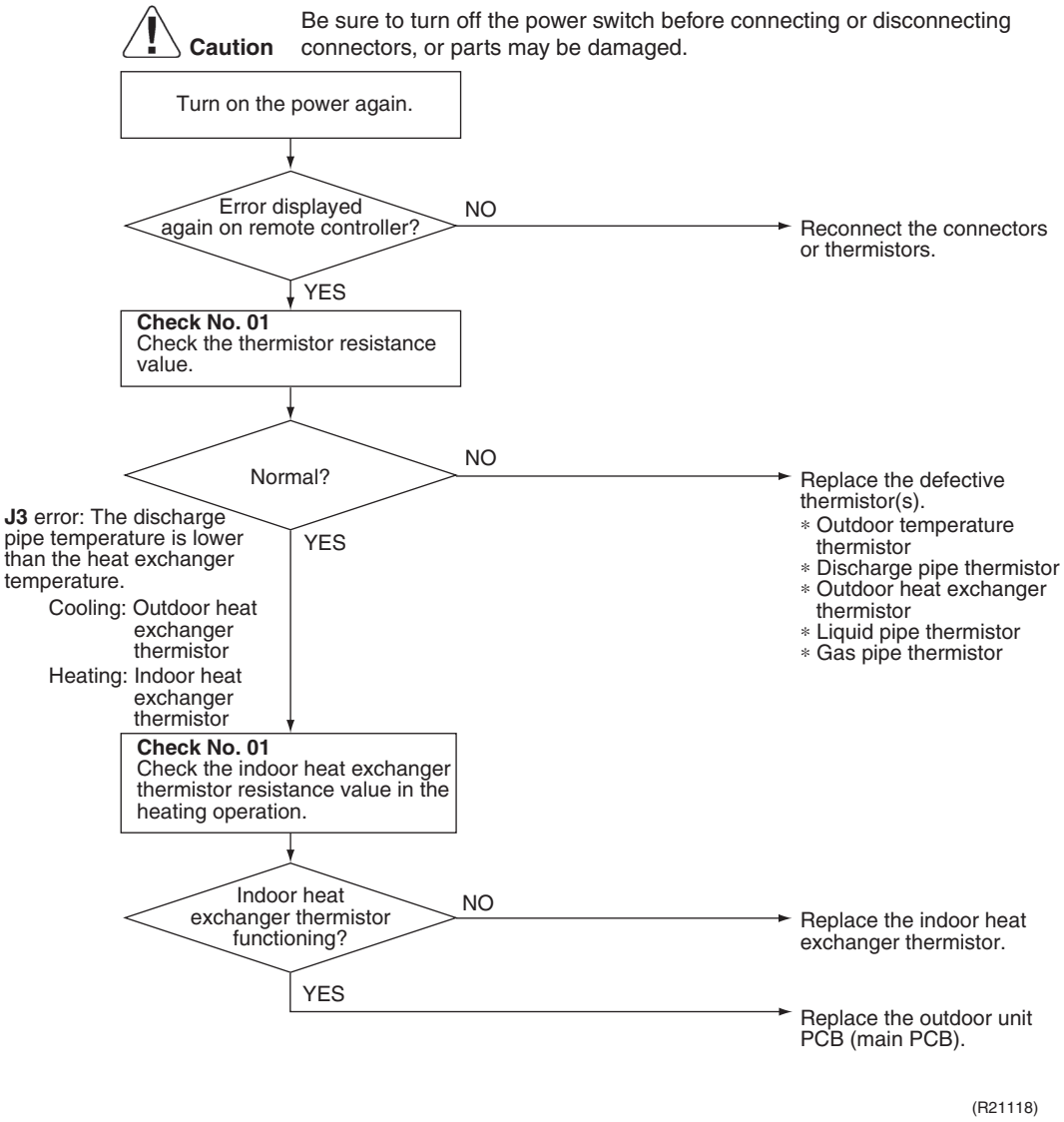

H9 : Outdoor temperature thermistor
J3 : Discharge pipe thermistor
J6 : Outdoor heat exchanger thermistor
J8 : Liquid pipe thermistor
J9 : Gas pipe thermistor

Reference **Check No.01** Refer to P.146

6.21 High Pressure Sensor Abnormality

Applicable Models
5MXM48AVJU9
3MXT(H)24AVJU9, 4MXT(H)36AVJU9, 5MXT(H)40AVJU9

Error Code
JA

Outdoor Unit LED Display
A ◑ 1 ☼ 2 ☼ 3 ● 4 ● 5 ●

Method of Error Detection
Error is detected from the pressure detected by the high pressure sensor.

Error Decision Conditions
The high pressure sensor is short circuited or open circuited.
Pressure range: 0 - 4.17 MPa

Supposed Causes
- Defective high pressure sensor
- Connection of low pressure sensor with wrong connection
- Defective outdoor unit PCB
- Disconnection of high pressure sensor

Troubleshooting

Caution Be sure to turn off the power switch before connecting or disconnecting connectors, or parts may be damaged.

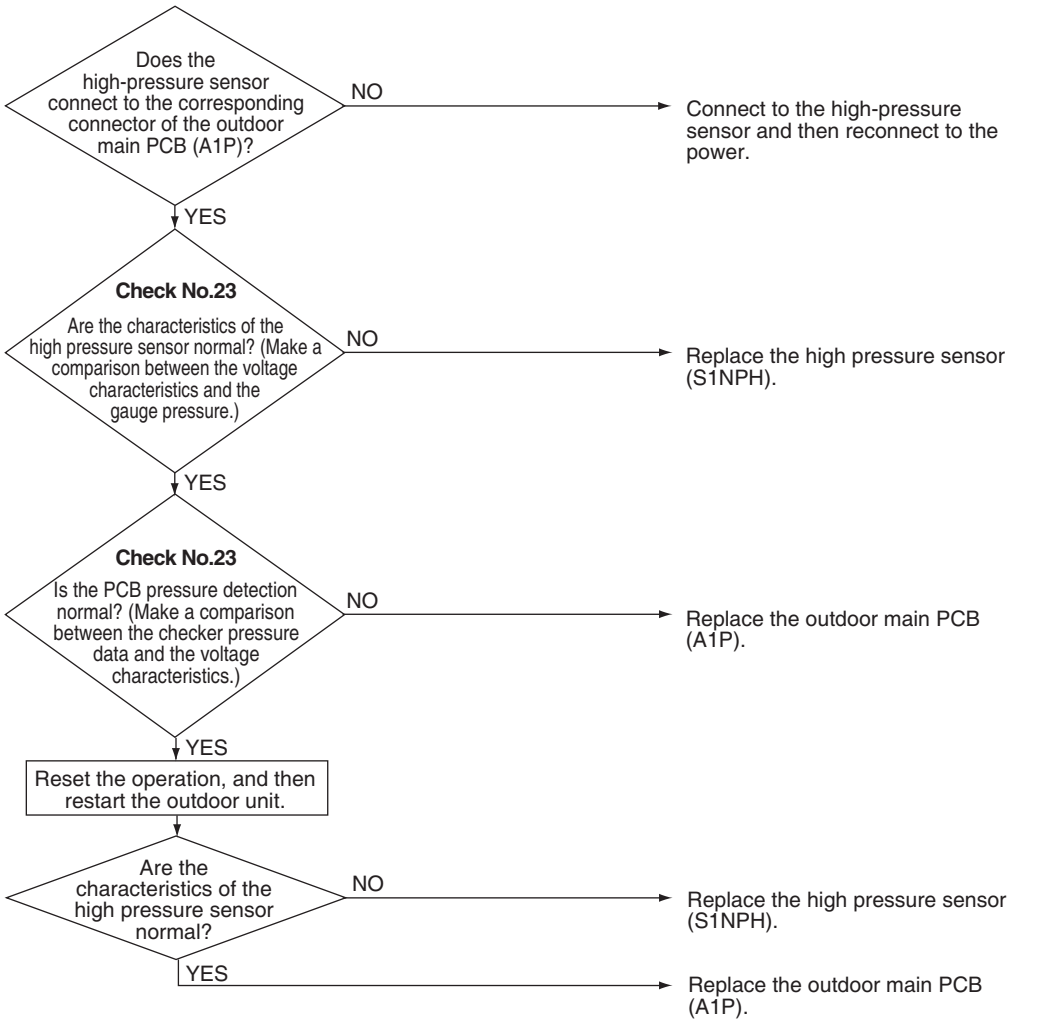

R6001351

Reference **Check No.23** Refer to P.158

6.22 Electrical Box Temperature Rise

Error Code

L3

Outdoor Unit LED Display

A ◑ 1 ☼ 2 ☼ 3 ● 4 ☼ 5 ●

Method of Error Detection

An electrical box temperature rise is detected by checking the radiation fin thermistor with the compressor off.

Error Decision Conditions

- With the compressor off, the radiation fin temperature is above **A**.
- The error is cleared when the temperature drops below **B**.
- To cool the electrical components, the outdoor fan starts when the radiation fin temperature rises above **C** and stops when the radiation fin temperature drops below **B**.

2/3/4MXM, 2MXT(H)

	°C	°F
A	100	212
B	70	158
C	85	185

5MXM, 3/4/5MXT(H)

Normal operation

	°C	°F
A	70	158
B	60	140

After completion of forced cooling operation until next compressor startup

	°C	°F
A	74	165.2
B	60	140

Supposed Causes

- Defective outdoor fan motor
- Short circuit
- Defective radiation fin thermistor
- Disconnection of connector
- Defective outdoor unit PCB

Troubleshooting

Caution Be sure to turn off the power switch before connecting or disconnecting connectors, or parts may be damaged.

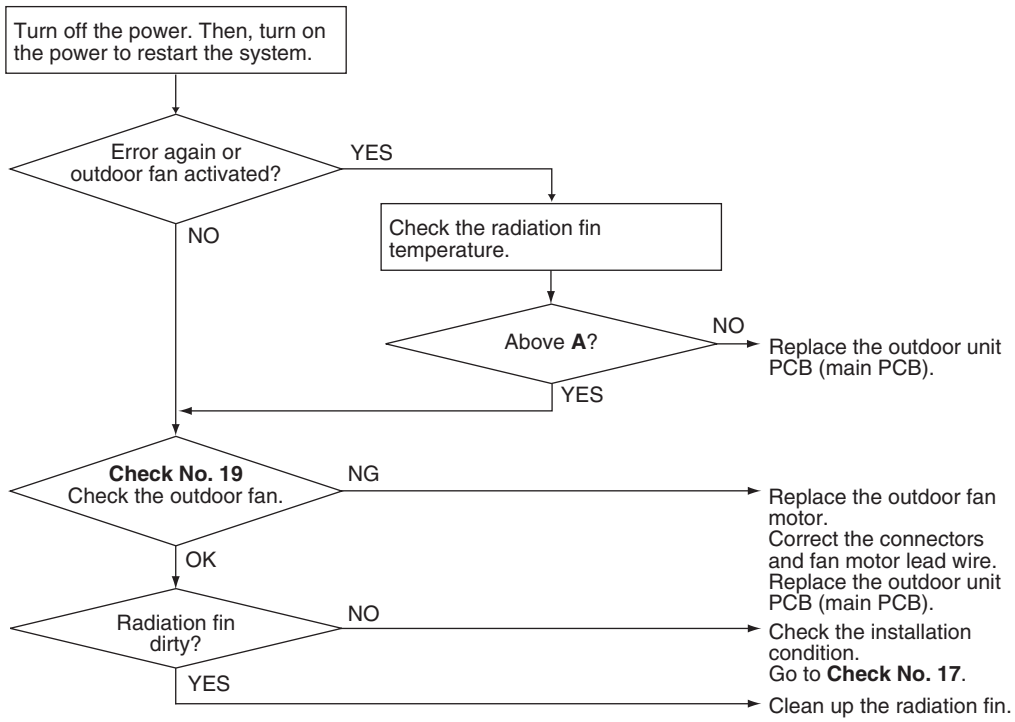

R6000426

Reference **Check No.17** Refer to P.152

Reference **Check No.19** Refer to P.153

6.23 Radiation Fin Temperature Rise

Error Code

L4

Outdoor Unit LED Display

A ◑ 1 ● 2 ● 3 ● 4 ☼ 5 ●

Method of Error Detection

A radiation fin temperature rise is detected by checking the radiation fin temperature with the compressor on.

Error Decision Conditions

- The radiation fin temperature with the compressor on is above **A**.
- The error is cleared when the temperature drops below **B**.
- If the error repeats, the system is shut down.
- Reset condition: Continuous run for about 60 minutes without any other error

2/3/4MXM, 2MXT(H)

	°C	°F
A	95	203
B	85	185

5MXM, 3/4/5MXT(H)

Normal operation

	°C	°F
A	70	158
B	64	147.2

In forced cooling operation

	°C	°F
A	74	165.2
B	64	147.2

Supposed Causes

- Defective outdoor fan motor
- Short circuit
- Disconnection of connector
- Defective outdoor unit PCB
- Silicone grease not applied properly on the radiation fin after replacing the outdoor unit PCB

Troubleshooting

Caution Be sure to turn off the power switch before connecting or disconnecting connectors, or parts may be damaged.

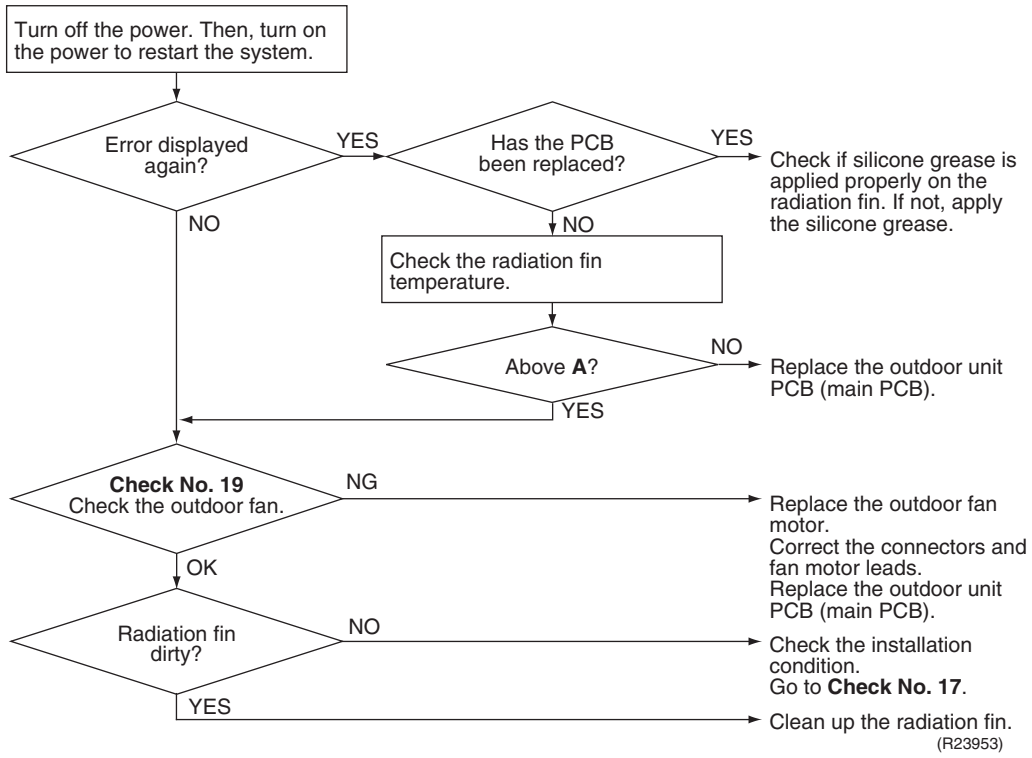

Note Refer to Silicone Grease on Power Transistor/Diode Bridge on page 175 for details.

Reference **Check No.17** Refer to P.152

Reference **Check No.19** Refer to P.153

6.24 Output Overcurrent Detection

Error Code	**L5**
Outdoor Unit LED Display	A ◑ 1 ● 2 ● 3 ☼ 4 ● 5 ●
Method of Error Detection	An output overcurrent is detected by checking the current that flows in the inverter DC section.
Error Decision Conditions	■ A position signal error occurs while the compressor is running. ■ A rotation speed error occurs while the compressor is running. ■ An output overcurrent signal is fed from the output overcurrent detection circuit to the microcomputer. ■ If the error repeats, the system is shut down. ■ Reset condition: Continuous run for about 5 minutes without any other error
Supposed Causes	■ Poor installation condition ■ Closed stop valve ■ Defective power module ■ Wrong internal wiring ■ Abnormal power supply voltage ■ Defective outdoor unit PCB ■ Supply voltage out of specification ■ Defective compressor

Troubleshooting

Caution Be sure to turn off the power switch before connecting or disconnecting connectors, or parts may be damaged.

* An output overcurrent may result from wrong internal wiring. If the system is interrupted by an output overcurrent after the wires have been disconnected and reconnected for part replacement, check the wiring again.

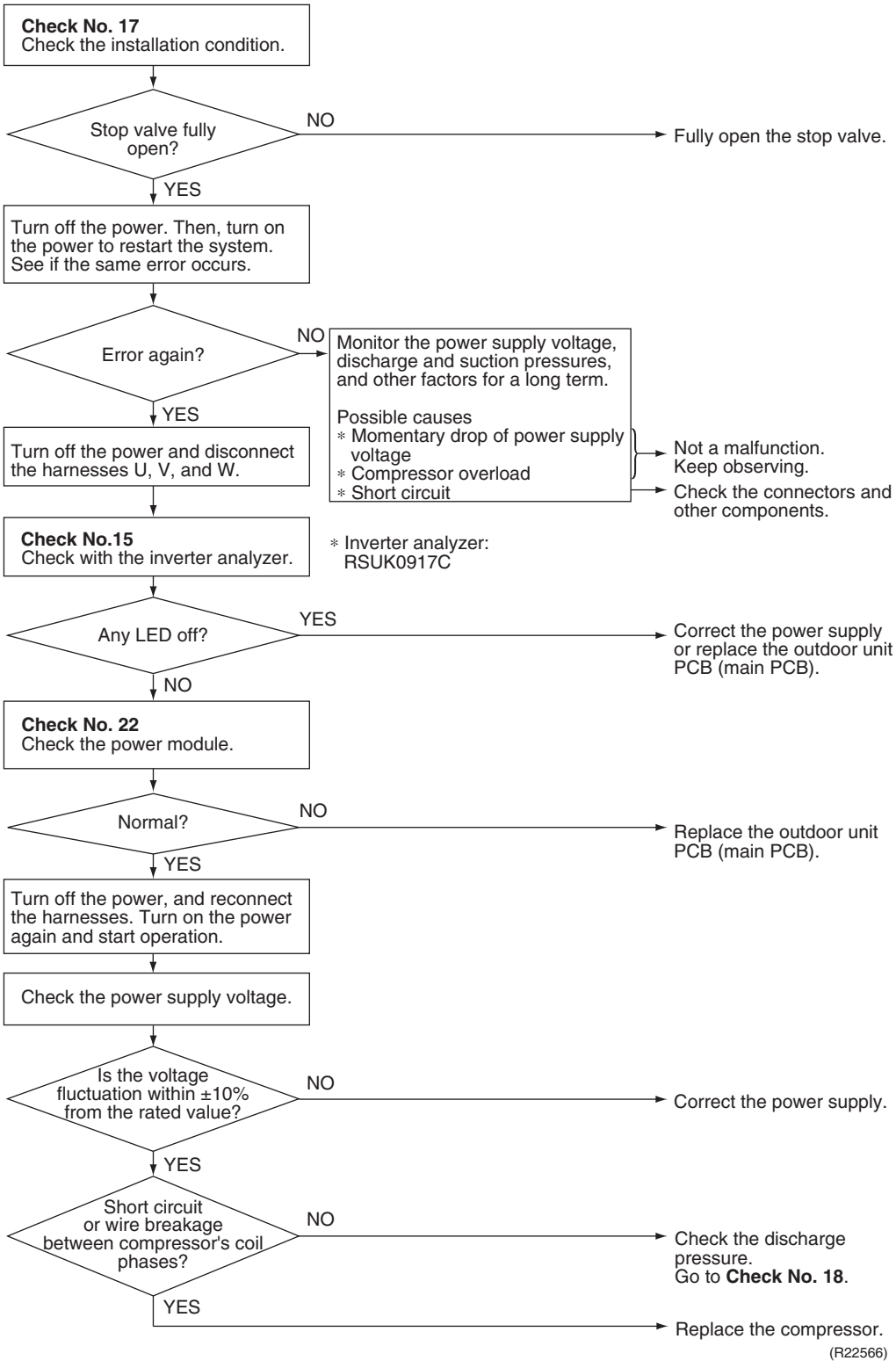

(R22566)

Reference **Check No.15** Refer to P.150

Reference **Check No.17** Refer to P.152

Reference **Check No.18** Refer to P.152

Reference **Check No.22** Refer to P.156

7. Check

7.1 Thermistor Resistance Check

Check No.01

Measure the resistance of each thermistor using multimeter.
The resistance values are defined by below table.
If the measured resistance value does not match the listed value, the thermistor must be replaced.

- Disconnect the connector of thermistor ASSY from the PCB to measure the resistance between the pins using multimeter.
- To check the thermistor soldered on a PCB, disconnect the PCB from other PCB/parts, and measure the resistance between the both ends of soldered thermistor.

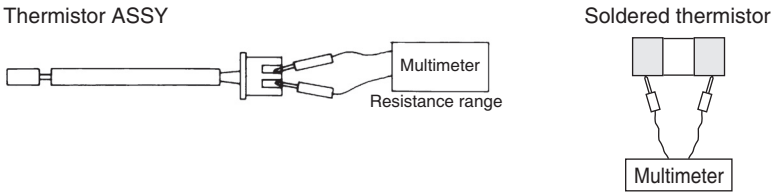

Thermistor temperature		Resistance (kΩ)
°C	°F	R(25°C / 77°F) = 20 kΩ B = 3950 K
–20	–4	197.8
–15	5	148.2
–10	14	112.1
–5	23	85.60
0	32	65.93
5	41	51.14
10	50	39.99
15	59	31.52
20	68	25.02
25	77	20.00
30	86	16.10
35	95	13.04
40	104	10.62
45	113	8.707
50	122	7.176

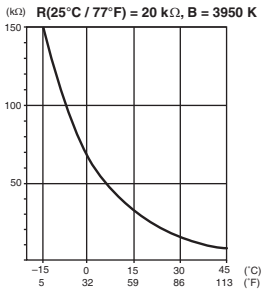

R6001195

Notes

- When replacing the defective thermistor(s), replace the thermistor as ASSY.
- Thermistors of some models are fixed to piping with a thermal insulation tube and clamp as in the figure. After thermistors are removed, attach them in the original position with caution not to contact the surrounding objects.

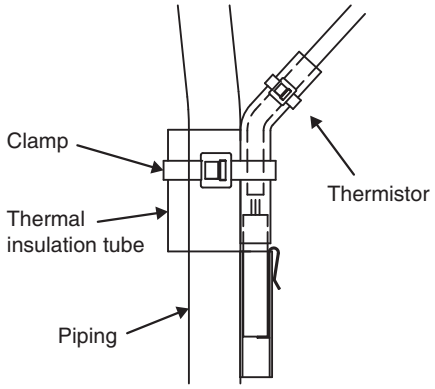

7.2 Indoor Fan Motor Connector Check

Check No.03

- Check the connection of connector.

1. Check connector the for connection.
2. Turn the power off.
3. Check if each resistance at the phases U - V and V - W is within specified rage in the table below.

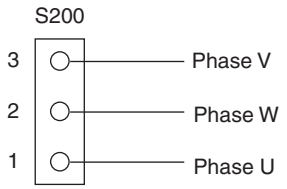

R6001148

	U - V/V - W Resistance (Ω)
07/09/12 class	70.9 ~ 78.3
15/18/24 class	42.9 ~ 47.5

7.3 Power Supply Waveform Check

Check No.11

Measure the power supply waveform between No. 1 and No. 2 on the terminal strip, and check the waveform disturbance.

- Check if the power supply waveform is a sine wave (Fig.1).
- Check if there is waveform disturbance near the zero-cross (sections circled in Fig.2).

[Fig.1]

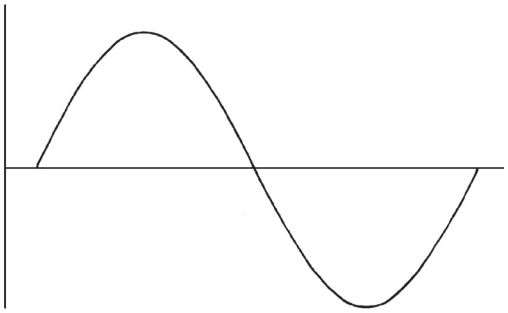

(R1736)

[Fig.2]

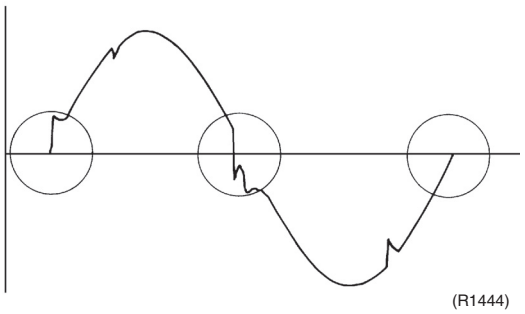

(R1444)

7.4 Electronic Expansion Valve Check

Check No.12

Conduct the followings to check the electronic expansion valve (EV).

1. Check if the EV connector is correctly inserted in the PCB. Match the EV unit number and the connector number.
2. Turn the power off and on again, and check if all the EVs generate latching sound.
3. If any of the EVs does not generate latching sound in the above step 2, disconnect that connector and check the continuity using a multimeter.
   Check the continuity between the pins 5 - 1, 5 - 2, 5 - 3, 5 - 4. If there is no continuity between the pins, the EV coil is faulty.
4. If no EV generates a latching sound in the above step 2, the outdoor unit PCB is faulty.
5. If the continuity is confirmed in the above step 3, mount a good coil (which generated latching sound) in the EV unit that did not generate a latching sound, and check if that EV generates a latching sound.
   * If a latching sound is generated, the outdoor unit PCB is faulty.
   * If a latching sound is not generated, the EV unit is faulty.

If the system keeps operating with a defective electronic expansion valve, the following problem may occur.

<table>
<tr><th>Valve opening position</th><th>Possible problem</th><th>Check method</th></tr>
<tr><td rowspan="2">Open</td><td>Cooling:
■ Flowing noise of refrigerant in the unit which is not in operation
■ Water leakage at the unit which is not in operation
■ Operation half due to anti-icing function</td><td rowspan="2">Reset power supply and conduct cooling operation unit by unit.
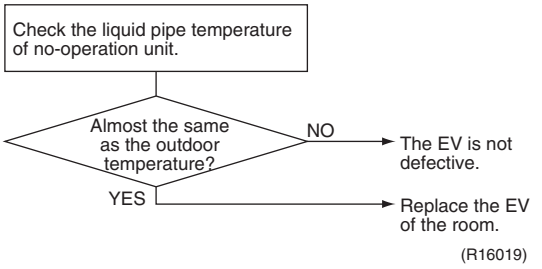

(R16019)</td></tr>
<tr><td>Heating:
■ Flowing noise of refrigerant in the unit which is not in operation
■ The unit does not heat the room.</td></tr>
<tr><td rowspan="2">Close</td><td>Cooling:
■ The problem unit does not cool the room.
■ Only the problem unit is in operation, the unit starts pump down.
(The low pressure of the unit becomes vacuum.)
■ Abnormal discharge pipe temperature</td><td rowspan="2">Reset power supply and conduct cooling operation unit by unit.
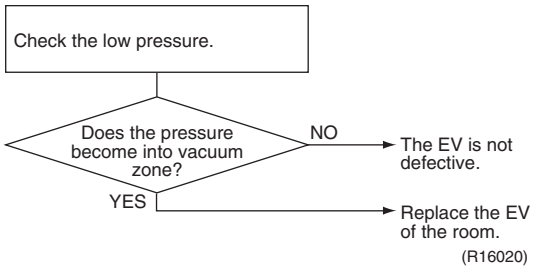

(R16020)</td></tr>
<tr><td>Heating:
■ Refrigerant shortage due to stagnation of liquid refrigerant inside the faulty indoor unit
■ The unit does not heat the room.
■ Abnormal discharge pipe temperature</td></tr>
</table>

7.5 Four Way Valve Performance Check

Check No.13

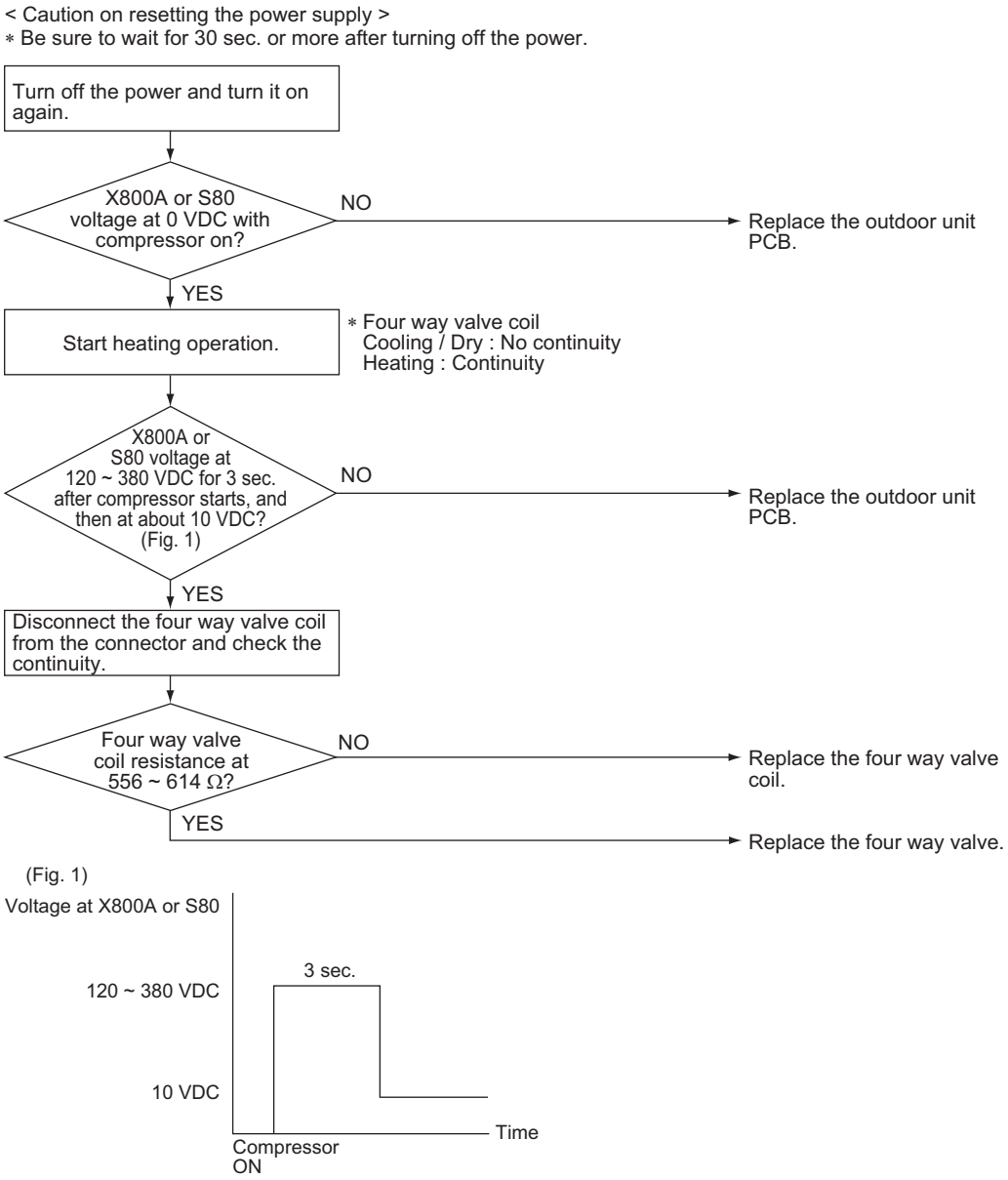

(Fig. 1)

R6001165

7.6 Inverter Unit Refrigerant System Check

Check No.14

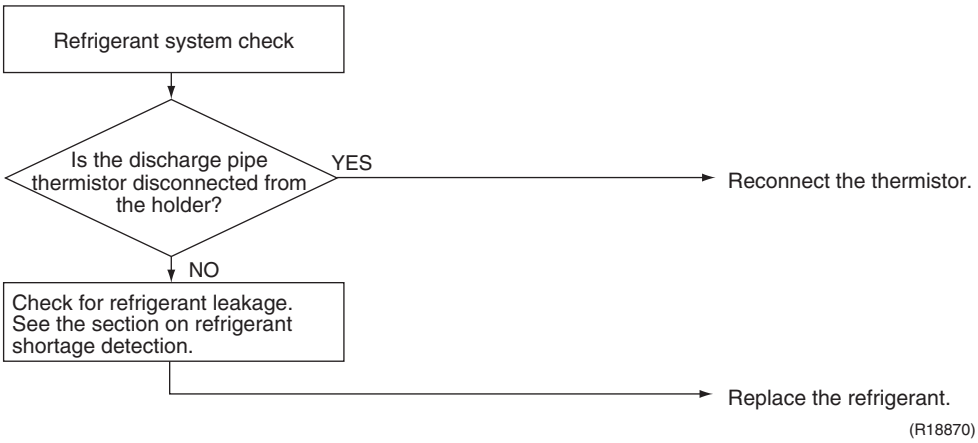

(R18870)

7.7 Inverter Analyzer Check

Check No.15

■ Characteristics

Inverter analyzer: RSUK0917C

If an abnormal stop occurs due to compressor startup failure or overcurrent output when using an inverter unit, it is difficult to judge whether the stop is caused by the compressor failure or some other failure (main PCB, power module, etc.). The inverter analyzer makes it possible to judge the cause of trouble easily and securely. Connect an inverter analyzer as a quasi-compressor instead of compressor and check the output of the inverter.

■ Operation Method

Step 1
Be sure to turn the power off.

Step 2
Install an inverter analyzer instead of a compressor.

Note:
Make sure the charged voltage of the built-in smoothing electrolytic capacitor drops to 10 VDC or below before carrying out the service work.

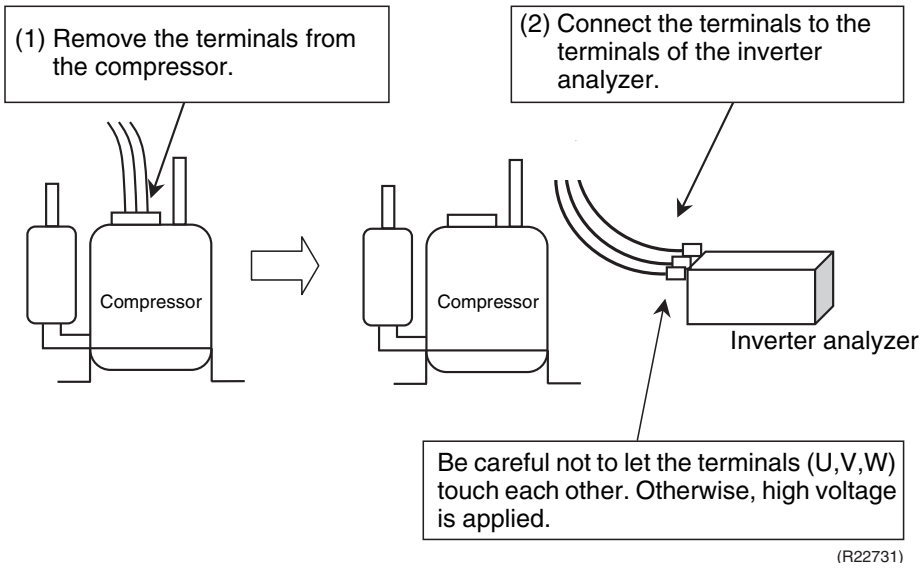

Reference:
If the terminals of the compressor are not FASTON terminals (difficult to remove the wire on the terminals), it is possible to connect wires available on site to the outdoor unit from output side of PCB. Do not connect them to the compressor at the same time, otherwise it may result in incorrect detection.

Step 3
Activate the power transistor test operation from the outdoor unit.
Press the forced cooling operation **ON/OFF** switch for 5 seconds.
(Refer to page 161 for the position.)
→ Power transistor test operation starts.

■ Diagnose method (Diagnose according to 6 LEDs lighting status.)

1. If all the LEDs are lit uniformly, the compressor is defective.
   → Replace the compressor.
2. If the LEDs are not lit uniformly, check the power module.
   → Refer to **Check No.22**.

3. If NG in **Check No.22**, replace the power module.
   (Replace the main PCB. The power module (IPM1) is united with the main PCB.)
   If OK in **Check No.22**, check if there is any solder cracking on the PCB.
4. If any solder cracking is found, replace the PCB or repair the soldered section.
   If there is no solder cracking, replace the PCB.

Caution

1. When the output compressor speed is low, the LEDs blink slowly. As the output compressor speed increases, the LEDs blink quicker. (The LEDs look like they are lit.)
2. On completion of the inverter analyzer diagnosis, be sure to re-crimp the FASTON terminals. Otherwise, the terminals may be burned due to loosening.

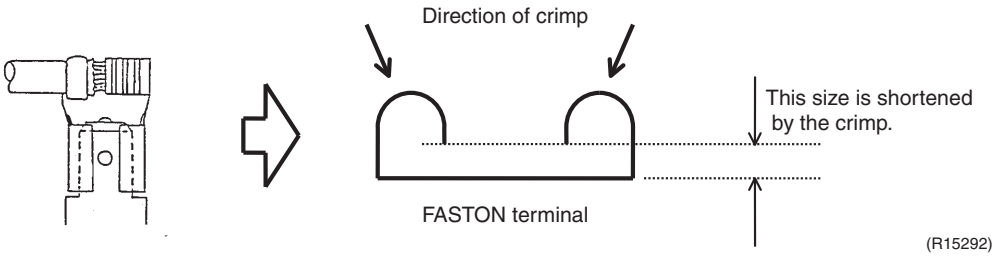

7.8 Outdoor Fan Motor Check

Check No.16 Outdoor fan motor

■ **2/3/4MXM, 2MXT(H)**

Check if the sinusoidal voltage is generated between pins 1 - 3 and 3 - 5 when the fan motor is manually rotated once.

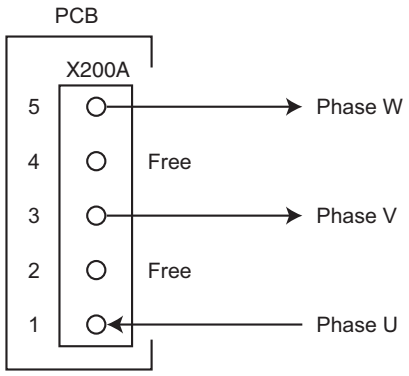

■ **5MXM, 3/4/5MXT(H)**

Check if the sinusoidal voltage is generated between pins 1 - 2 and 2 - 3 when the fan motor is manually rotated once.

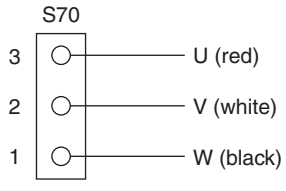

7.9 Installation Condition Check

Check No.17

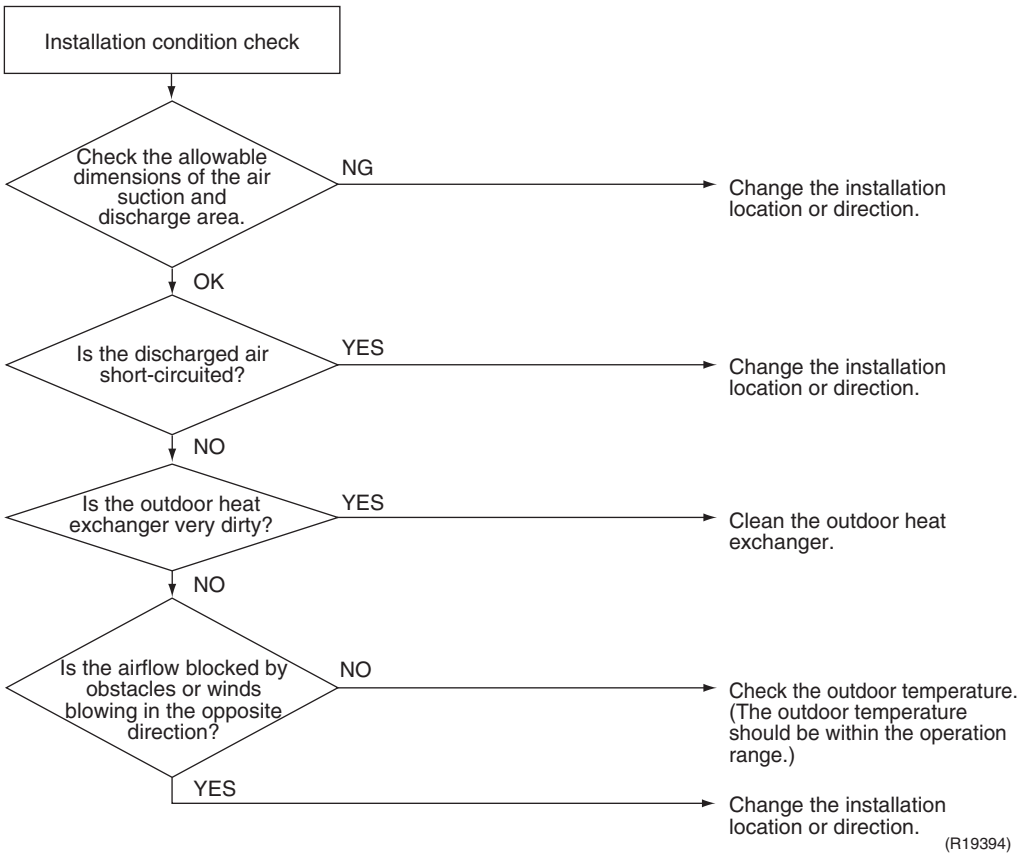

7.10 Discharge Pressure Check

Check No.18

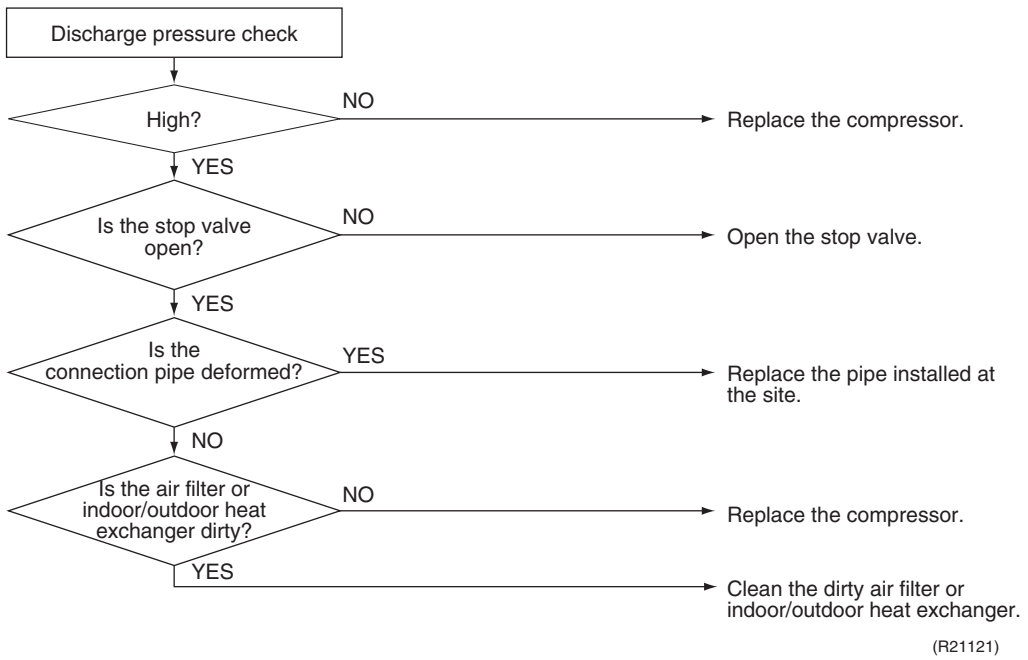

7.11 Outdoor Fan System Check

Check No.19 **DC motor**

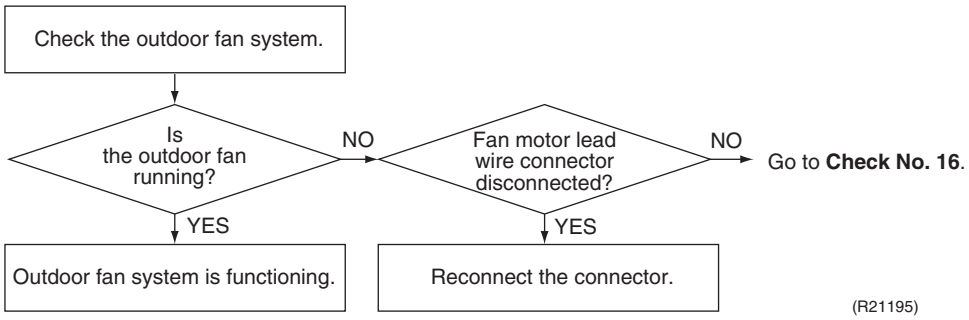

7.12 Main Circuit Short Check

Check No.20 Check to make sure that the voltage between (+) and (–) of the diode bridge (DB1) is about 0 V before checking

- Measure the resistance between the pins of the DB1 referring to the table below.
- If the resistance is ∞ or less than 1 kΩ, short circuit occurs on the main circuit.

Positive terminal (+) of digital multimeter	~ (2, 3)	+ (4)	~ (2, 3)	– (1)
Negative terminal (–) of digital multimeter	+ (4)	~ (2, 3)	– (1)	~ (2, 3)
Resistance is OK.	several kΩ ~ several MΩ			
Resistance is NG.	0 Ω or ∞			

■ **2/3/4MXM, 2MXT**

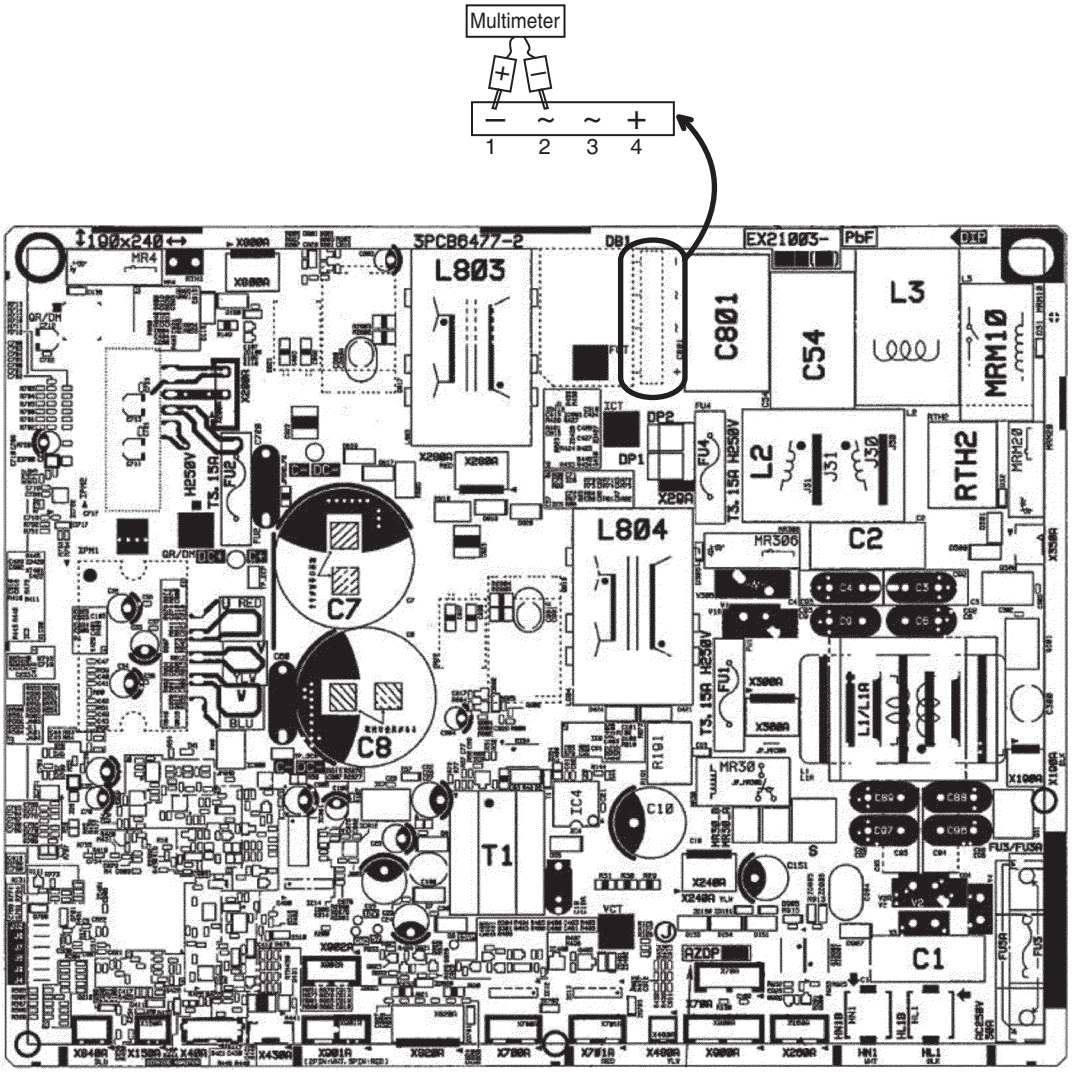

R6001176

■ **5MXM, 3/4/5MXT, 3/4/5MXTH**

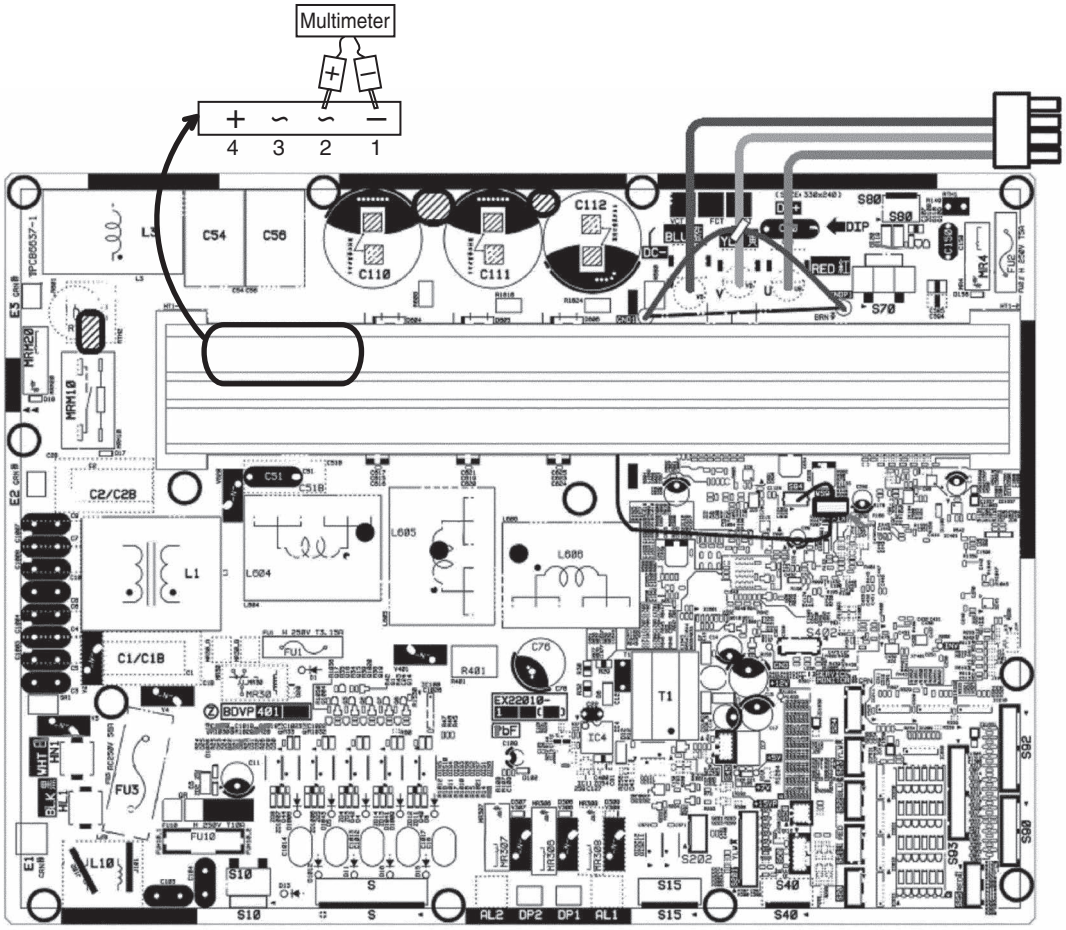

R6001314

7.13 Capacitor Voltage Check

Check No.21

Before this check, turn the circuit breaker off and wait for 10 minutes for prevention of electric shock.

■ **2/3/4MXM, 2MXT(H)**

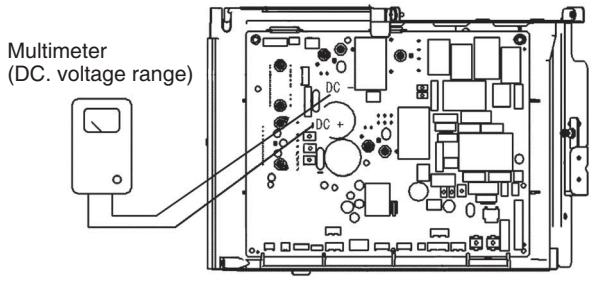

R6001172

- To prevent electrical shock, use a multimeter to check that the voltage between DC + and DC – is 50 V or less.
- The surface of the test points (DC +, DC –) may be covered with the coating. Be sure to make firm contact between the multimeter probes and the test points.

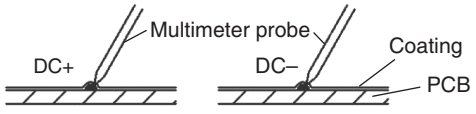

R6001173

■ **5MXM, 3/4/5MXT(H)**

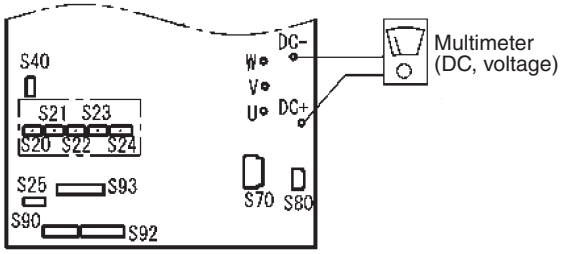

R6000525

- To prevent an electrical shock, use a multimeter to check that the voltage between DC + and DC – is 50 V or less.
- The surface of the test points (DC +, DC –) may be covered with the coating. Be sure to make firm contact between the multimeter probes and the test points.

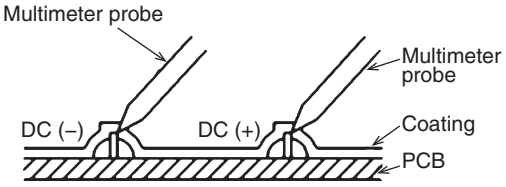

R6000551

7.14 Power Module Check

Check No.22

Check to make sure that the voltage between (+) and (–) of the power module is about 0 V before checking.

■ Disconnect the compressor harness connector from the outdoor unit PCB. To disengage the connector, press the protrusion on the connector.

■ Follow the procedure below to measure resistance between the (+) or (–) terminal of the power module and the U, V, or W terminal of the compressor with a multimeter. Evaluate the measurement results referring to the following table.

Positive terminal (+) of digital multimeter	Power module (+)	UVW	Power module (–)	UVW
Negative terminal (–) of digital multimeter	UVW	Power module (+)	UVW	Power module (–)
Resistance is OK.	several kΩ ~ several MΩ			
Resistance is NG.	0 Ω or ∞			

■ **2/3/4MXM, 2MXT**

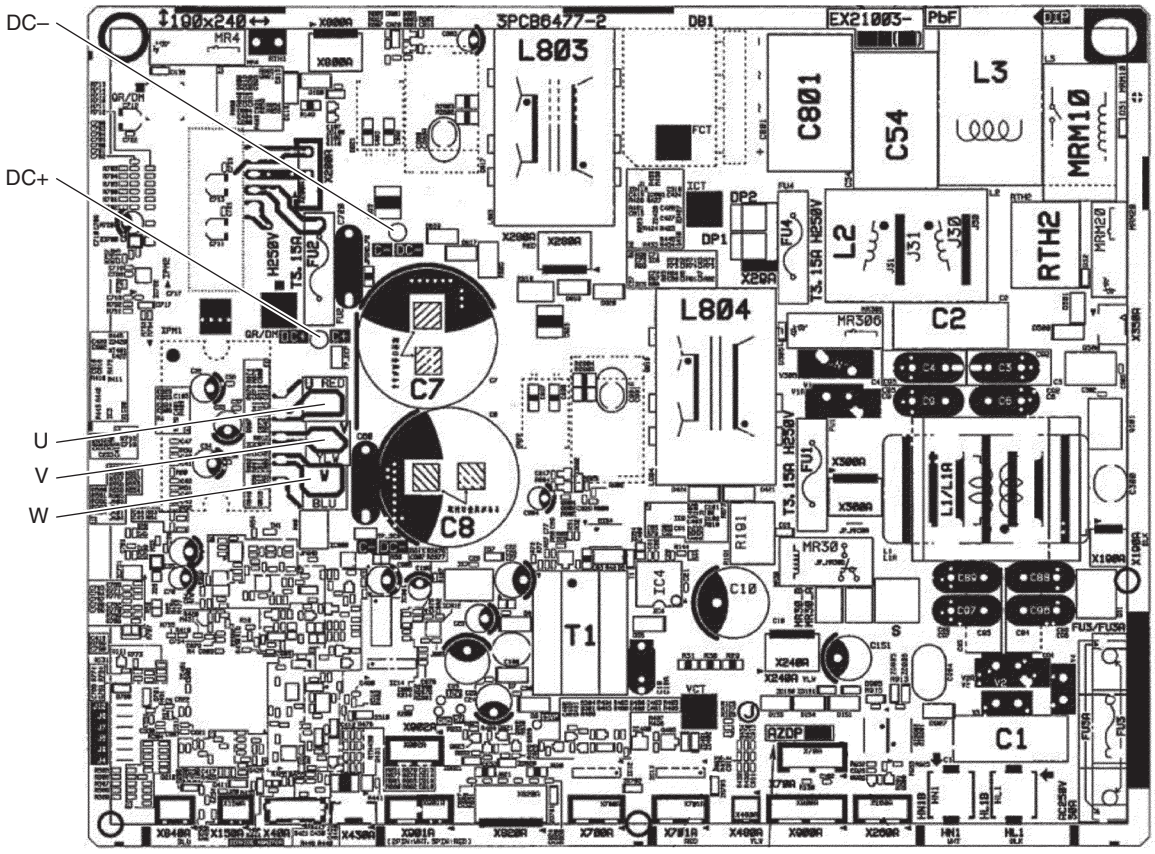

R6001177

■ **5MXM, 3/4/5MXT, 3/4/5MXTH**

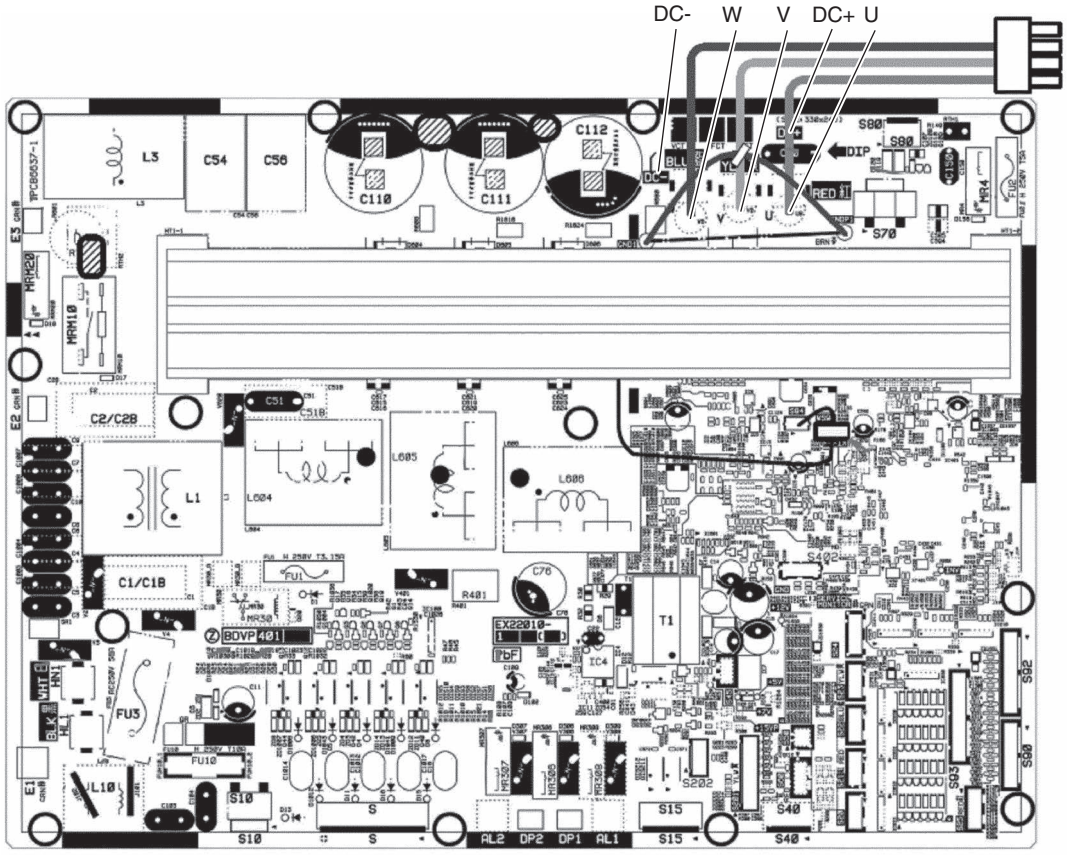

R6001315

7.15 High Pressure Sensor Check

Check No.23 **High pressure sensor**

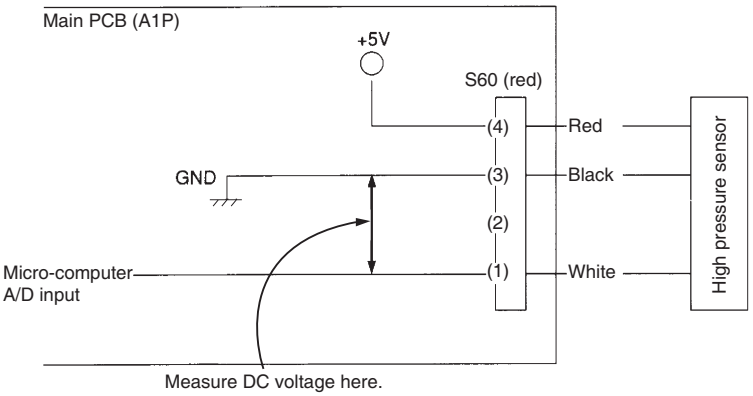

R6001352

Pressure sensor and voltage characteristics

- Detected pressure
  0 ~ 4.15 MPaG

- Output voltage
  0.5 V at 0 MPaG
  3.5 V at 4.15 MPaG

Part 7
Trial Operation and Field Settings

1. Pump Down Operation 160
2. Forced Cooling Operation 161
3. Wiring Error Check Function 162
4. Trial Operation 164
5. Field Settings 166
   5.1 Indoor Unit 166
   5.2 Outdoor Unit 172
6. Silicone Grease on Power Transistor/Diode Bridge 175

1. Pump Down Operation

Outline

In order to protect the environment, be sure to conduct pump down operation when relocating or disposing of the unit.

Details

■ **2/3/4MXM, 2MXT**

1. Remove the valve cap from liquid stop valve and gas stop valve.
2. Carry out forced cooling operation.
3. After 3 to 5 minutes, close the liquid stop valve with a hexagonal wrench.
4. After 3 to 4 minutes, close the gas stop valve and stop forced cooling operation.
5. Attach the valve caps once procedures are complete.

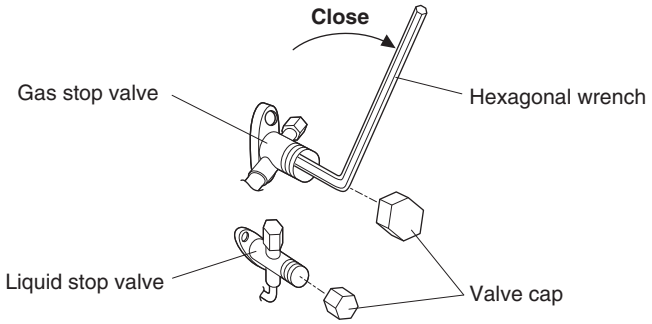

(R25062)

■ **5MXM, 3/4/5MXT, 3/4/5MXTH**

1. Remove the valve caps from the liquid stop valve and the gas stop valve.
2. Carry out forced cooling operation.
3. After 1 - 2 minutes, close the liquid stop valve with a hexagonal wrench.
4. After 3 - 4 minutes, close the gas stop valve and stop the forced cooling operation.
5. Attach the valve cap once procedures are complete.

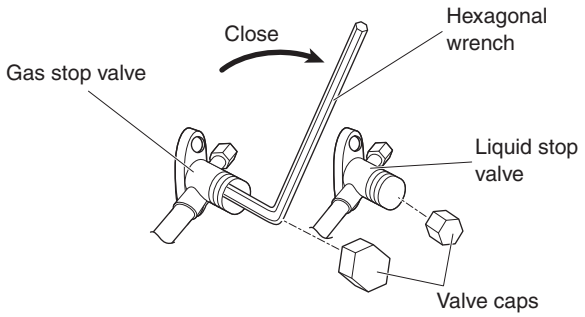

R7000216

Reference Refer to page 161 for details of forced cooling operation.

2. Forced Cooling Operation

Outline

The forced cooling operation is allowed when both the following conditions are met.
1. The outdoor unit is not abnormal and not in the 3-minute standby mode.
2. The outdoor unit is not operating.

Protection functions have priority over all other functions during forced cooling operation.

Procedure

■ **2/3/4MXM, 2MXT**

1. Turn off the power.
2. Remove the service lid (2 screws).
3. Remove the service monitor PCB switch cover (1 screw).
4. Switch SW5 and SW6 to off.
5. Turn the operation mode switch (SW2) to COOL.
6. Screw the service monitor PCB switch cover back on (1 screw).
7. Turn on the power.
8. Push the forced operation switch (SW1) above the service monitor PCB cover. (The operation will start.)
   - Forced cooling operation will stop automatically after about 11 ~ 15 minutes. To stop the operation, press the forced operation switch (SW1) again.

■ **5MXM, 3/4/5MXT, 3/4/5MXTH**

1. Turn off the power.
2. Remove the protection plate (right) (2 screws).
3. Remove the switch cover (1 screw).
4. Switch SW5 and SW6 to off.
5. Turn the operation mode switch (SW2) to COOL.
6. Screw the switch cover back on (1 screw).
7. Attach the protection plate (right) (2 screws).
8. Turn on the power.
9. Push the forced operation switch (SW1) above the service PCB cover. (The operation will start.)
   - Forced cooling operation will stop automatically after about 8 minutes. To stop the operation, push the forced operation switch (SW1) again.

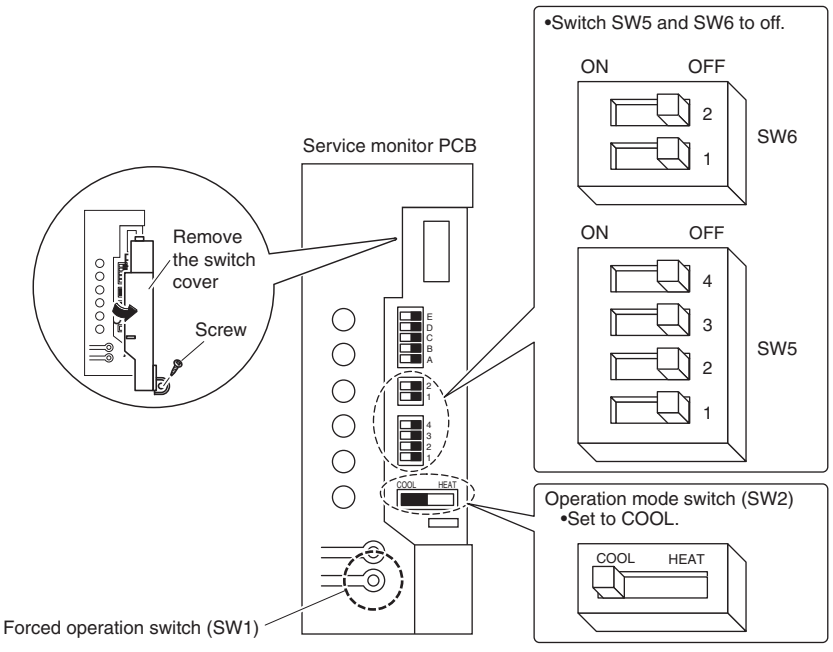

R7000217

3. Wiring Error Check Function

Outline

Wiring error check function is designed for the microcomputer to correct wiring errors itself. If local wiring is unclear in the case of buried piping, for example, just press the wiring error check switch on the outdoor unit. Even if the connections for Room A and Room B are confused, the system may run without a hassle.
Note that this check function does not work in the following cases.

- For 3-minute standby period after the power is turned on or after the compressor has stopped.
- When the outdoor temperature is below 5°C (41°F).
- If the indoor unit is in trouble (also in case of all-room transmission failure).

When the piping and wiring are perfect, there is no need to use this function.

Procedure

1. Press the wiring error check switch (SW3) on the service monitor PCB of the outdoor unit, and the wiring error check function is activated.
2. In about 15 ~ 20 minutes, the check finishes automatically.
3. When the check is over, the service monitor LED indicators start blinking.

LED	1	2	3	4	5	Judgment
Status	Blinking one after another					Self-correction completed
	All blinking					Self-correction impossible
	Any of the LEDs stay on					Emergency stop

- Self-correction complete…The LED indicators blink one after another (only connected parts).
- Self-correction impossible…The LED indicators blink all at the same time.
  - Transmission failure occurs at any of the indoor units.
  - The indoor unit heat exchanger thermistor is disconnected.
  - An indoor unit is in trouble (if a trouble occurs during the wiring error checking).
- Emergency stop…If any of the LED indicators stays on, follow the diagnostic procedure.

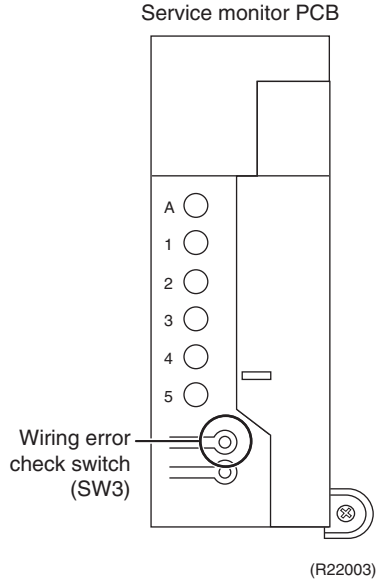

Details

- Wiring error check is realized by feeding refrigerant one by one through each piping port and detecting indoor heat exchanger temperature with the indoor heat exchanger thermistor in each room to see if the temperature changes in correct order.
- During wiring error check, freezing (cracking) noise may be heard from the indoor unit. This is not a malfunction. The noise is generated by the heat exchanger that is cooled below 0°C (32°F) to make temperature change more visible.
- Indoor fan motor turns on and off during wiring error check.

Wiring error check result is indicated using service monitor LEDs when all the checking procedures are completed. LEDs stop blinking when the system returns to the normal operation.

In a multi system with 2 ports (Port A and Port B), LED 1 and LED 2 indicate wiring to Room A and Room B respectively. The LED that blinks first and second indicate piping Port A and Port B respectively.

Ex: Suppose the LED indicators are blinking as follows.

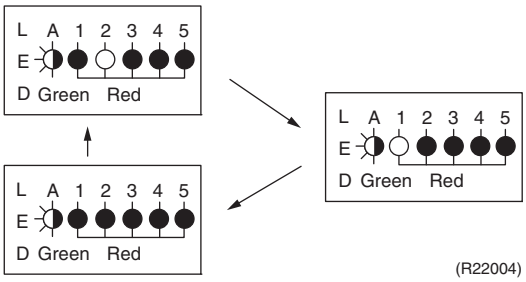

In this example, Port A and wiring to Room B are connected to the same room and Port B and wiring to Room A are connected to another room. Incorrect wiring is then corrected automatically.

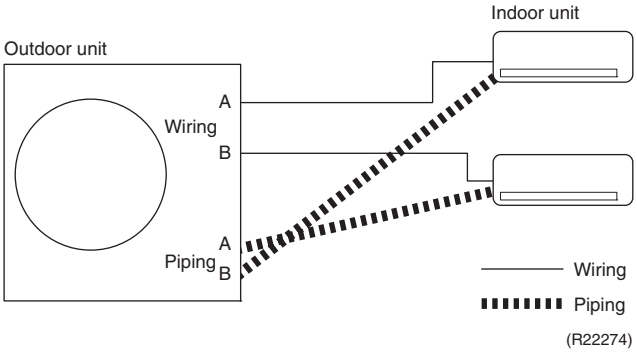

Notes

1. Wrongly connected liquid and gas pipes cannot be self-corrected. Be sure to make the liquid pipe and the gas pipe in pairs.
2. To cancel the wiring error check procedure halfway, press the wiring error check switch again.
   In this case, the memory of the microcomputer returns to its initial status (Room A wiring → Port A piping, Room B wiring → Port B piping).
3. When replacing the outdoor unit PCB, be sure to use this function.
4. Make the priority room setting after wiring error check. If you set the priority room before wiring error check, the prioritized room may be changed after self-correction.

4. Trial Operation

Outline

■ During the trial operation, first check the operation of each unit individually. After this, check the simultaneous operation of all indoor units. Check both COOL and HEAT operations.

1. Measure the supply voltage and make sure that it is within the specified range.
2. In COOL operation, select the lowest programmable temperature. In HEAT operation, select the highest programmable temperature.
   - When operating the air conditioner in COOL operation in winter, or HEAT operation in summer, activate trial operation mode by following the instructions in the installation manual for the indoor unit.
3. Carry out the trial operation following the instructions in the operation manual to ensure that all functions and parts, such as the movement of the flap, are working properly.
   - To protect the air conditioner, restart operation is disabled for 3 minutes after the system has been turned off.
   - When trial operation is conducted in heating operation directly after the circuit breaker is turned on, in some cases no air will be output for about 3 to 20 minutes in order to protect the air conditioner.
   - During COOL operation, frost may form on the gas stop valve or other parts. This is normal.
4. After running the unit for about 20 minutes, measure the temperatures at the indoor unit inlet and outlet.
   - If the measurements are above the values shown in the table below, then they are normal.

	COOL operation	HEAT operation
Temperature difference between inlet and outlet	About 14°F (8°C)	About 36°F (20°C)

(When running in one room)

5. After trial operation is complete, set the temperature to a normal level (78°F to 82°F (26°C to 28°C) in COOL operation, 68°F to 75°F (20°C to 24°C) in HEAT operation).

Procedure

When operating the air conditioner in cooling operation in winter, set it to the trial operation mode using the following method.

1. Press both of **TEMP** buttons and **OFF** button at the same time.
2. Press either of **TEMP** ▲ or **TEMP** ▼ button and select "**T**".
3. Press **FAN** button.
4. Press **COOL** or **HEAT** button. ("**T**" will be displayed and the unit will start forced cooling operation.)
5. Trial operation will stop automatically after about 30 minutes. To stop trial operation, press **OFF** button

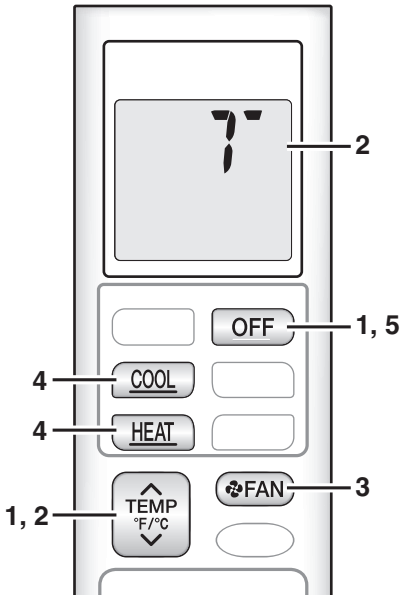

R7000445

Note(s)

- The air conditioner draws a small amount of power in its standby mode. If the system is not to be used for some time after installation, shut off the circuit breaker to eliminate unnecessary power consumption.
- If the circuit breaker trips to shut off the power to the air conditioner, the system will restores the original operation mode when the circuit breaker is opened again.

Test Items

Test items	Symptom
Indoor and outdoor units are installed securely.	Fall, vibration, noise
No refrigerant gas leaks.	Incomplete cooling/heating function
Refrigerant gas and liquid pipes and indoor drain hose extension are thermally insulated.	Water leakage
Draining line is properly installed.	Water leakage
System is properly earthed.	Electrical leakage
Only specified wires are used for all wiring and all wires connected correctly.	No operation or burn damage
Indoor or outdoor unit's air inlet or outlet are unobstructed.	Incomplete cooling/heating function
Stop valves are opened.	Incomplete cooling/heating function
Indoor unit properly receives remote controller commands.	No operation
Pipes and wires are connected to the corresponding terminal blocks/connection ports for the connected unit.	No cooling/heating
The priority room setting is set for only 1 room.	The priority room setting will not function.
Explain to the user that when using a smartphone for operation, it is necessary to prepare a repeater, or similar device, if the signal from the wireless LAN router is weak near the air conditioner.	Air conditioner not responding to smartphone

5. Field Settings

5.1 Indoor Unit

5.1.1 When 2 Units are Installed in 1 Room

Outline

When 2 indoor units are installed in one room, the 2 wireless remote controllers can be set for different addresses. Change the address setting of one of the 2 units.

Procedure

■ **ARC480A83 Wireless Remote Controller**

1. Remove the battery cover of the remote controller.
2. Cut the address jumper.
3. Press the center of **TEMP** button and **OFF** button on the remote controller at the same time.
4. Press **TEMP ▲** or **TEMP ▼** button to select **A** (address setting).
5. Press **FAN** button to enter the address setting mode.
   Then, the indoor unit OPERATION lamp will blink for about 1 minute.
6. Press the indoor unit **ON/OFF** switch while the OPERATION lamp is blinking.
7. Press **FAN** button on the remote controller for 5 seconds to return to the previous display.

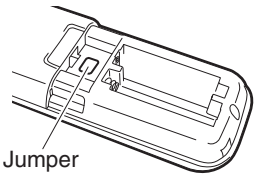

Jumper	Address
EXIST	1
CUT	2

R7000030

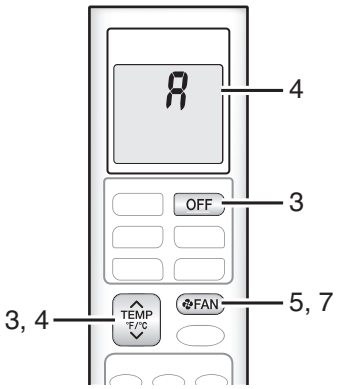

R7000447

Indoor Unit

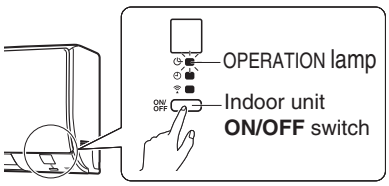

R7000448

Note(s)

If setting could not be carried out completely while the OPERATION lamp was blinking, carry out the setting process once again from the beginning.

Caution

Replace the remote controller if you cut a jumper unintentionally.
Jumpers are necessary for electronic circuit. Improper operation may occur if you cut any of them.

Procedure

■ BRC073A6 Wired Remote Controller

6-1 Press and hold the Cancel button for 4 seconds or longer. The Service Settings menu is displayed.

<Basic screen>

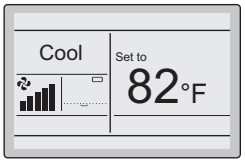

<Service Settings>

6-2 Select Field Settings and press the Menu/Enter button.

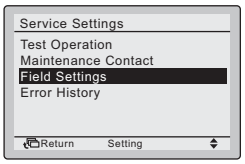

<Field settings>

6-3 Highlight the "Mode No.", and select the desired "Mode No." by using the ▲▼ (Up/Down) buttons.

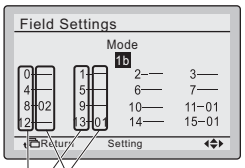

- The current settings are displayed.
- CODE NO. " -- " means that there is no function available.

6-4 Highlight the SECOND CODE. of the FIRST CODE NO. to be changed and select the desired SECOND CODE NO. by using the ▲▼ (Up/Down) buttons. Multiple identical mode number settings are available.

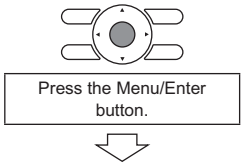

6-5 Press the Menu/Enter button. The confirmation screen is displayed.

6-6 Select Yes and press the Menu/Enter button. The settings are saved and the Field settings screen returns.

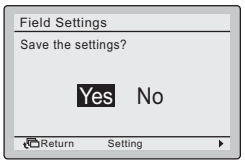

<Field Settings>

6-7 After all changes are completed, press the Cancel button twice.

6-8 The backlight goes out and "Checking the connection. Please stand by" is displayed during initialization. After the initialization, the Basic screen returns.

Mode No.	First Code No.	Description of the setting	Second code No.			
			01	02	03	04
1b	8	Daylight Saving Time	Disable	Enable*	—	—
	11	(Private use)	NA*	NA	—	—
	13	Basic screen display	Icon+Text*	Icon	—	—
	15	(Private use)	NA*	NA	—	—
1c	0	(Private use)	NA	NA*	—	—
	2	(Private use)	NA	NA*	—	—
	4	(Private use)	NA	NA*	—	—
	5	(Private use)	NA*	—	—	—
	6	(Private use)	NA*	—	—	—
	14	(Private use)	NA*	NA	—	—
1e	1	(Private use)	NA	NA*	—	—
	2	Setback function	Do not use	Heat only	Cool only	Cool and Heat*
	5	(Private use)	NA	NA*	—	—
	6	(Private use)	NA	NA*	—	—
	8	(Private use)	NA*	—	—	—
	9	(Private use)	NA	NA*	—	—
	a	(Private use)	NA*	—	—	—

* Factory default setting

5.1.2 Temperature Display Switch

ARC480A83

- You can select Fahrenheit or Celsius for temperature display.
- Press **TEMP ▲** button and **ON TIMER** buttons simultaneously for 5 seconds to change the unit of temperature display.

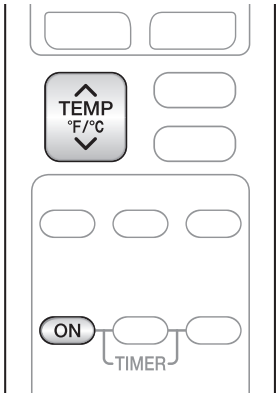

(R14477)

BRC073A6

You can select Fahrenheit or Celsius for temperature display.

- Display the Configuration menu.
- Press the ▲ or ▼ buttons to select "**Celsius / Fahrenheit**" and press the **Menu/Enter** button.

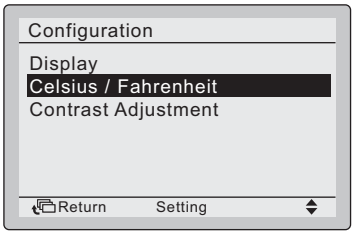

- Press the ▲ or ▼ buttons to select **Celsius** or **Fahrenheit.**
- Press the **Menu/Enter** button to confirm the settings and to return to the Basic Screen.

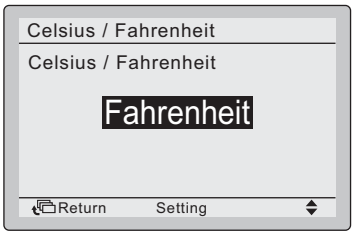

5.1.3 Service Mode of Wireless Remote Controller

The remote controller mode is hierarchized by special conditions and operation content. Refer below for the main hierarchy of the menu.

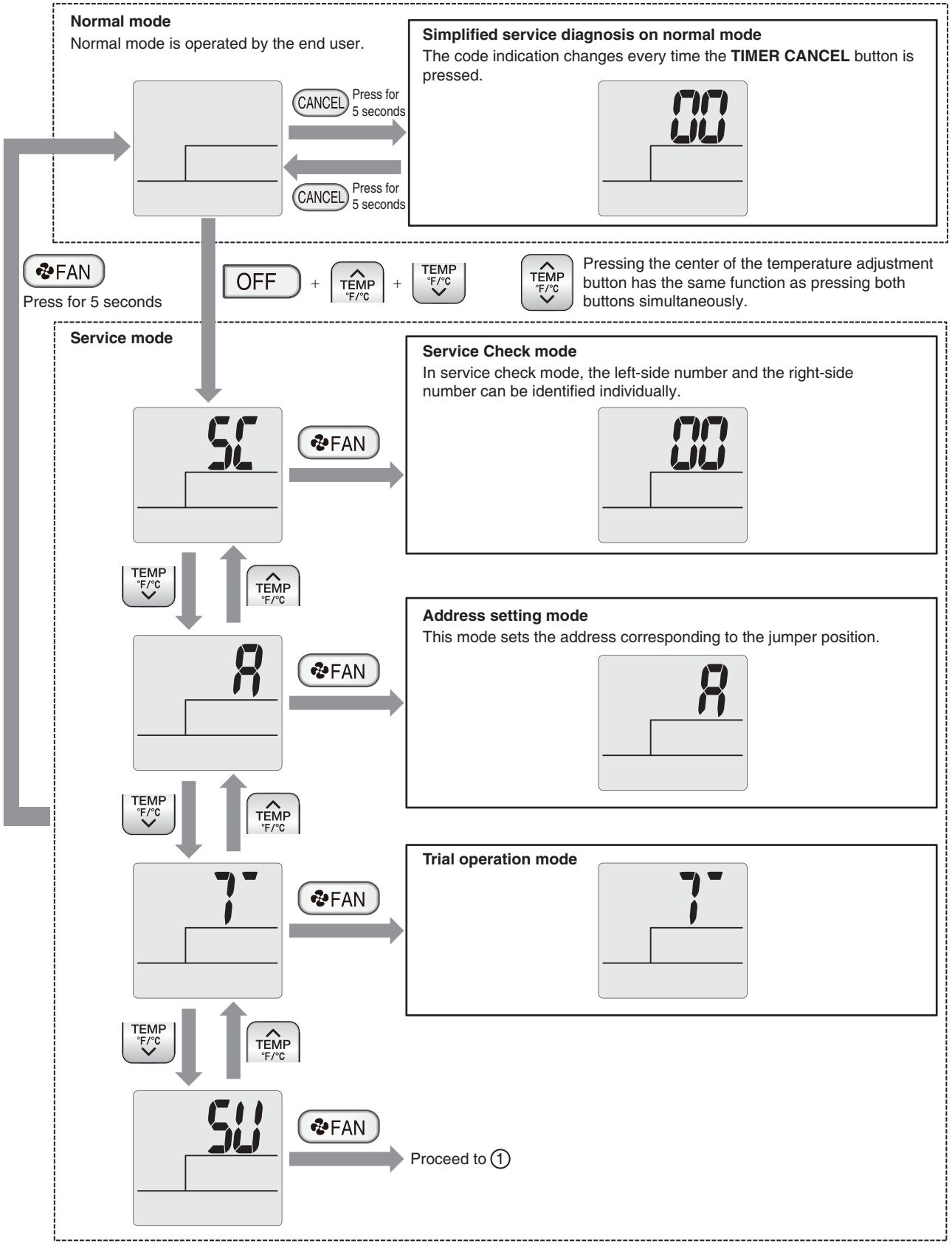

R5000463

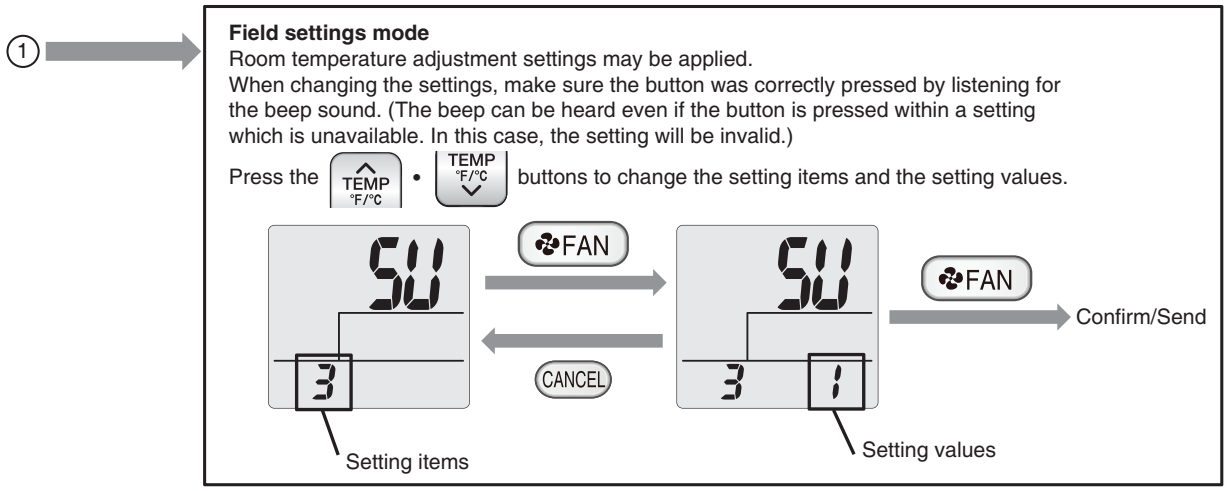

R5000462

Overview of Settings

Setting items		Setting options	Factory Setting	Contents
3	Suspend	0: OFF 1: ON	**1**	Activation/Deactivation of Standby electricity saving (suspend function) **0:** Power will still be supplied to the outdoor unit PCB after the unit operation stopped. **1:** Three minutes after the unit operation stops, the power supply to the outdoor unit PCB is shut off. (This function is only available on certain models.)
4	Dry keep	0: OFF 1: ON	**0**	Stops the airflow of indoor unit when the thermostat is OFF to prevent increase of room humidity. **0:** When thermostat is OFF, the fan rotor will still be OPERATING, hence there is airflow. **1:** When thermostat is OFF, the fan rotor will be STOPPED, hence there is no airflow.
5	Preheating control	0: OFF 1: ON	**0**	Activation/Deactivation of compressor preheating **0:** Deactivation of compressor preheating **1:** Activation of compressor preheating
6	Room temperature adjustment (cooling)	0: Low 2 (–2°C) 1: Low 1 (–1°C) 2: Standard (0°C) 3: High 1 (+1°C) 4: High 2 (+2°C)	**2**	Adjustment of indoor temperature thermistor in cooling operation. Used for adjustment of room temperature control.
7	Room temperature adjustment (heating)	0: Low 2 (–2°C) 1: Low 1 (–1°C) 2: Standard (0°C) 3: High 1 (+1°C) 4: High 2 (+2°C)	**2**	Adjustment of indoor temperature thermistor in heating operation. Used for adjustment of room temperature control.
10	Auto-restart	0: OFF 1: ON	**1**	This setting decides the operation of the unit when the power supply resumed after a power supply shutdown (i.e. power failure). **0:** When the power supply resumes, the unit remains in stopped operation. **1:** When the power supply resumes, the unit resumes the operation before the shutdown of power supply.
12	Warmer airflow setting	0: OFF 1: ON	**0**	This setting makes the discharge airflow temperature warmer.

Note(s)

After replacing the indoor unit PCB, all the values are returned to the factory settings.
Use the remote controller to change the settings again.
When only the remote controller is replaced, the values stored in the PCB remain the same.
There is no hassle to the end user.

5.2 Outdoor Unit

5.2.1 Priority Room Setting

Outline

The indoor unit for which priority room setting is applied takes priority in the following cases.

- Operation mode priority
  The operation mode of the prioritized room takes precedence. For example, when the prioritized indoor unit starts cooling operation, the other indoor units which have been in heating operation enter the standby mode. Heating operation will resume if the prioritized indoor unit stops cooling operation.

- Priority during POWERFUL operation
  The electronic expansion valves are controlled to provide more capacity to the prioritized room and the capacities for the other indoor units will be slightly reduced.

- OUTDOOR UNIT QUIET operation priority
  When the OUTDOOR UNIT QUIET operation is selected in the prioritized room, the outdoor unit runs quietly.
  Without priority room setting, OUTDOOR UNIT QUIET operation starts only when the function is set for all the operating indoor units.

Procedure

1. Turn the circuit breaker off before changing the setting.
2. Turn on the one of the switches of the SW4 on the service monitor PCB.
   Only one room can be set as the priority room.
3. Turn the power on.

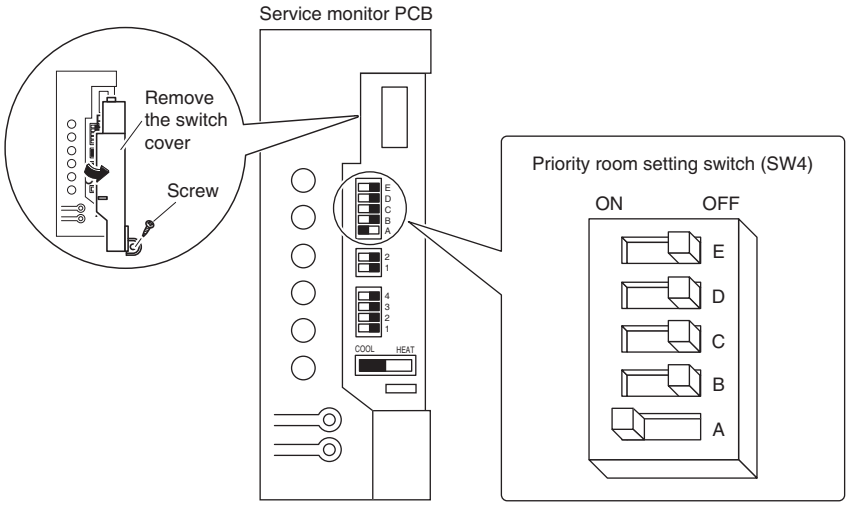

R7000367

5.2.2 COOL/HEAT Mode Lock

Use the X161A or S15 connector to set the unit to cooling only or heating only.
Setting to heating only (H): short-circuit the pins 1 and 3 of the connector X161A or S15.
Setting to cooling only (C): short-circuit the pins 3 and 5 of the connector X161A or S15.

The following specifications apply to the connector housing and pins.

- JST products:
  Housing: VHR-5N
  Pin: SVH-21T-P1.1

■ **2/3/4MXM, 2MXT(H)**

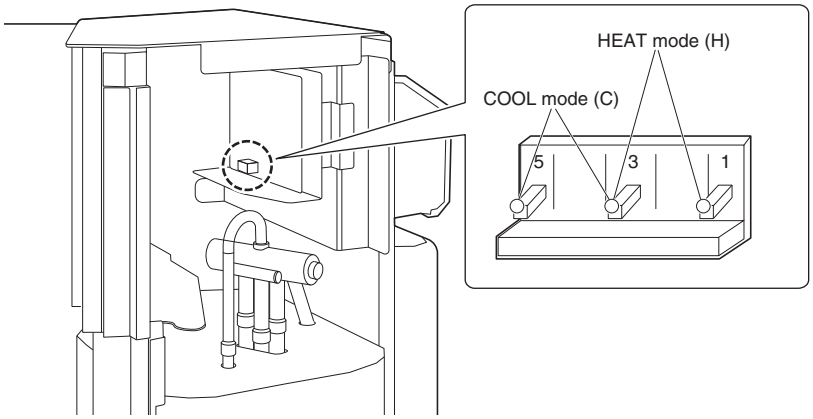

R7000449

■ **5MXM, 3/4/5MXT(H)**

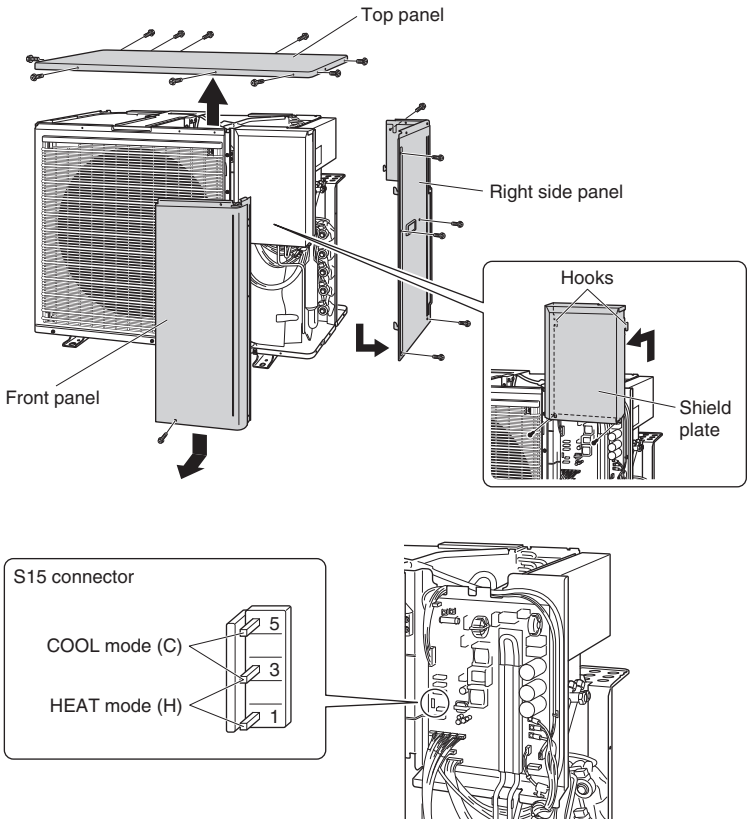

R7000163

Note(s) Forced operation is also possible in cooling/heating mode

5.2.3 NIGHT QUIET Mode

Outline

If NIGHT QUIET mode is to be used, initial settings must be made when the unit is installed. Explain the function of NIGHT QUIET mode, as described below, to the customer, and confirm whether or not the customer wants to use NIGHT QUIET mode.

NIGHT QUIET mode function reduces operating noise of the outdoor unit at nighttime. This function is useful if the customer is worried about the effects of the operating noise on the neighbors. However, if NIGHT QUIET mode is running, cooling capacity is reduced.

Procedure

Turn on the SW6-1 on the service monitor PCB of the outdoor unit.

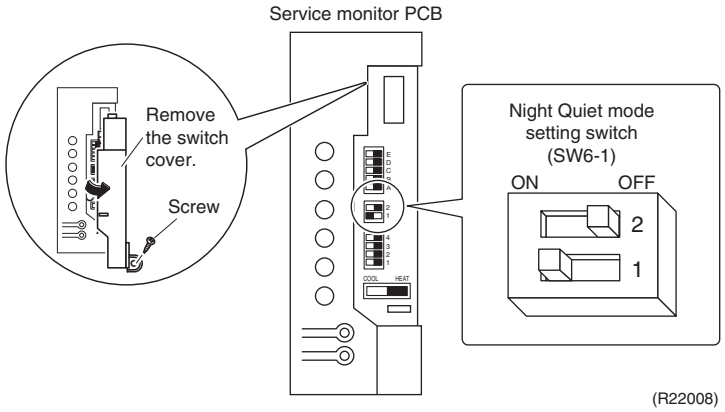

5.2.4 Drain Pan Heater

Applicable Models

2MXM18AVJU9, 3MXM24AVJU9, 4MXM36AVJU9, 5MXM48AVJU9
2MXT18AVJU9, 3MXT24AVJU9, 4MXT36AVJU9, 5MXT40AVJU9

Outline

In high humidity areas or heavy snow areas, it is recommended to attach a drain pan heater to prevent ice build-up from the bottom frame.
Field setting is necessary when attaching the optional drain pan heater.

Procedure

1. Attach the drain pan heater in accordance with the installation manual included with the drain pan heater.
2. Using a tool such as nippers, cut the jumper (J_DP) on the service monitor PCB.

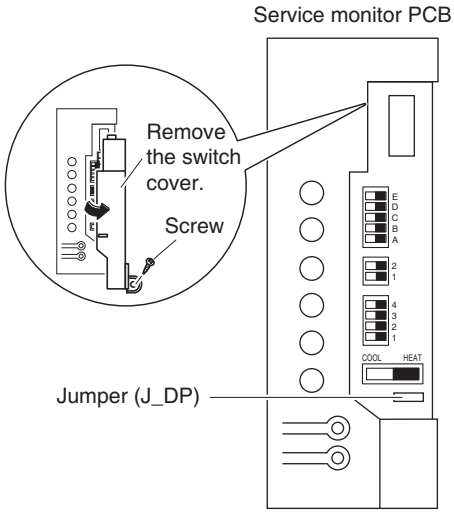

6. Silicone Grease on Power Transistor/Diode Bridge

Outline

Apply the specified silicone grease to the heat generation part of a power transistor/diode bridge when you replace an outdoor unit PCB. The silicone grease encourages the heat dissipation of a power transistor/diode bridge.

Details

1. Wipe off the old silicone grease on the refrigerant pipe completely.
2. Apply the silicone grease on the heat sink evenly. See the illustrations below for examples of application.
3. Tighten the screws of cover.
4. Make sure that the heat generation parts are firmly contacted to refrigerant pipe.

Note(s)

Smoke emission may be caused by bad heat radiation when the silicone grease is not appropriately applied.

- OK: Evenly applied

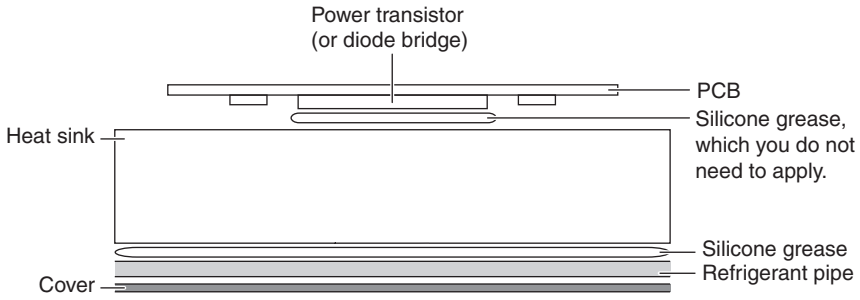

R7000168

- NG: Not evenly applied

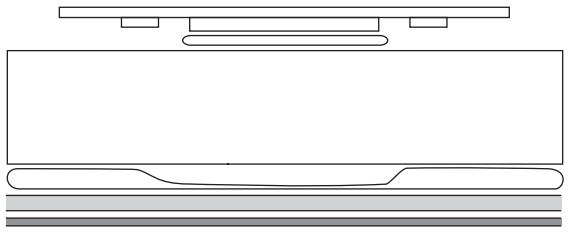

R7000158

- NG: Foreign matter is stuck.

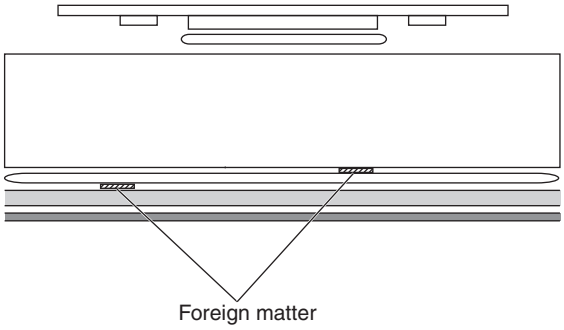

R7000159

Part 8
Appendix

1. Piping Diagrams 177
   1.1 Indoor Unit 177
   1.2 Outdoor Unit 178
2. Wiring Diagrams 182
   2.1 Indoor Unit 182
   2.2 Outdoor Unit 184
3. Operation Limit 194

1. Piping Diagrams

1.1 Indoor Unit

CTXV07AVJU9, FTXV09/12AVJU9

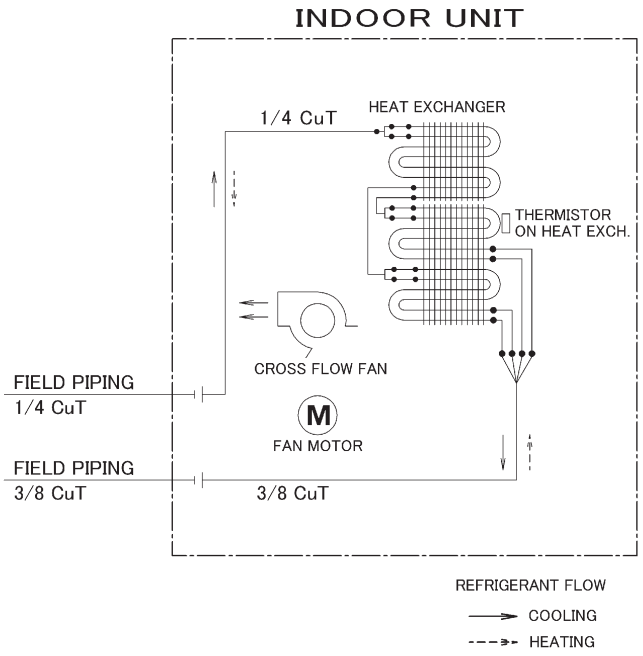

4D150950

FTXV15/18AVJU9

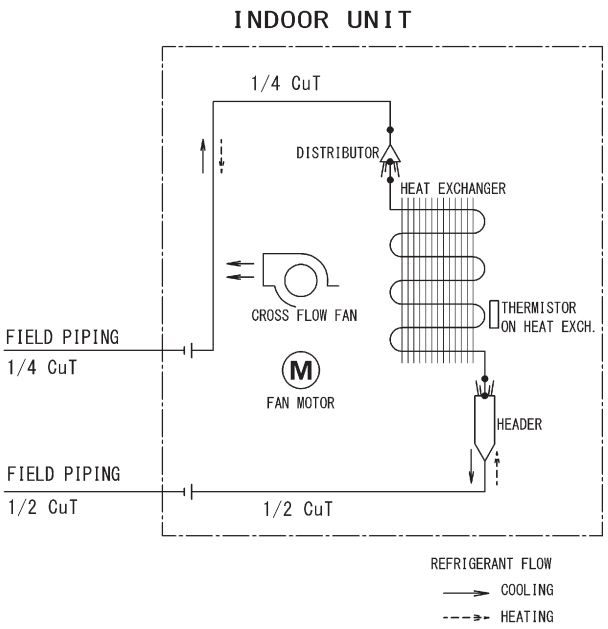

4D091769E

FTXV24AVJU9

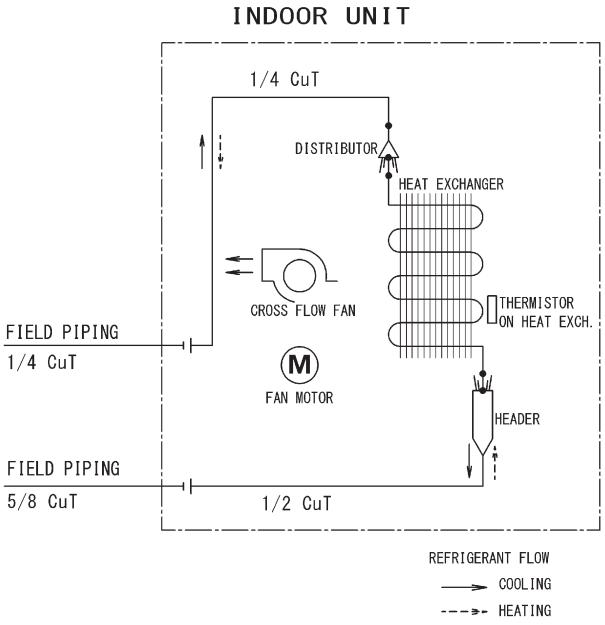

4D091768C

1.2 Outdoor Unit

2MXM18AVJU9

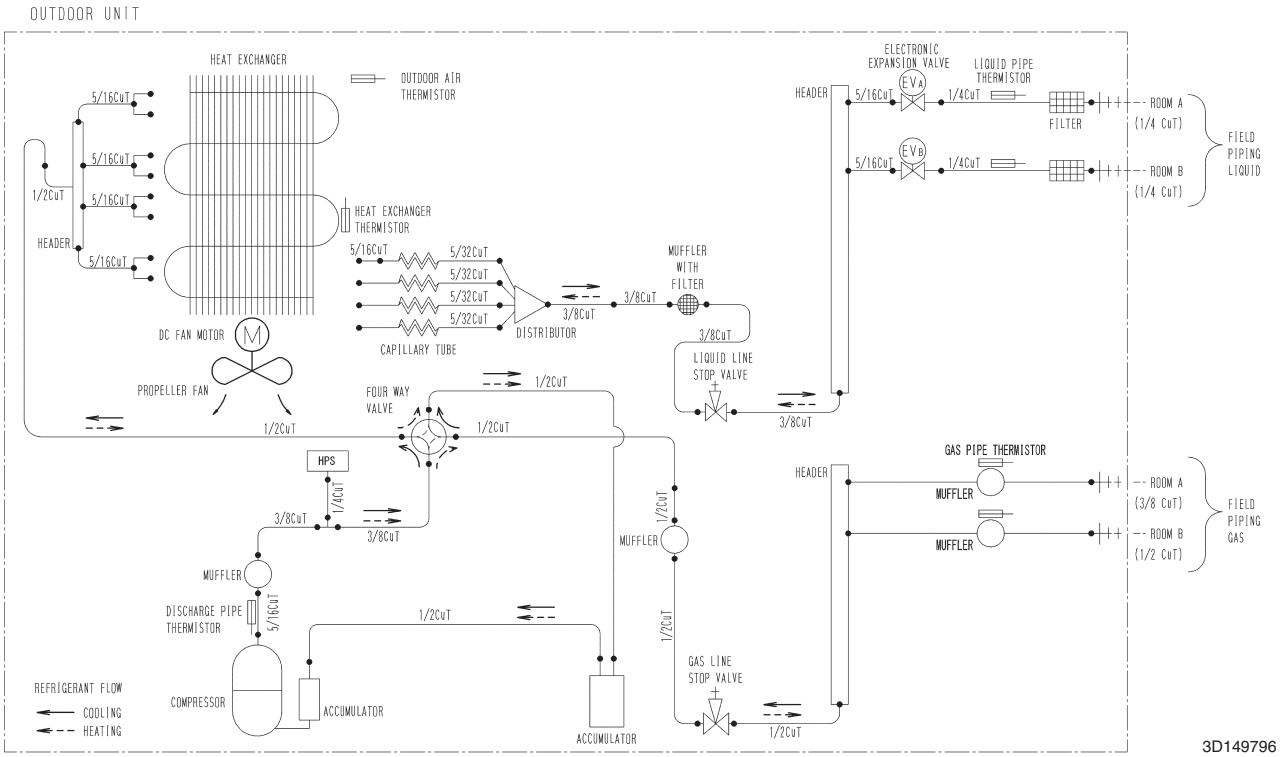

3MXM24AVJU9

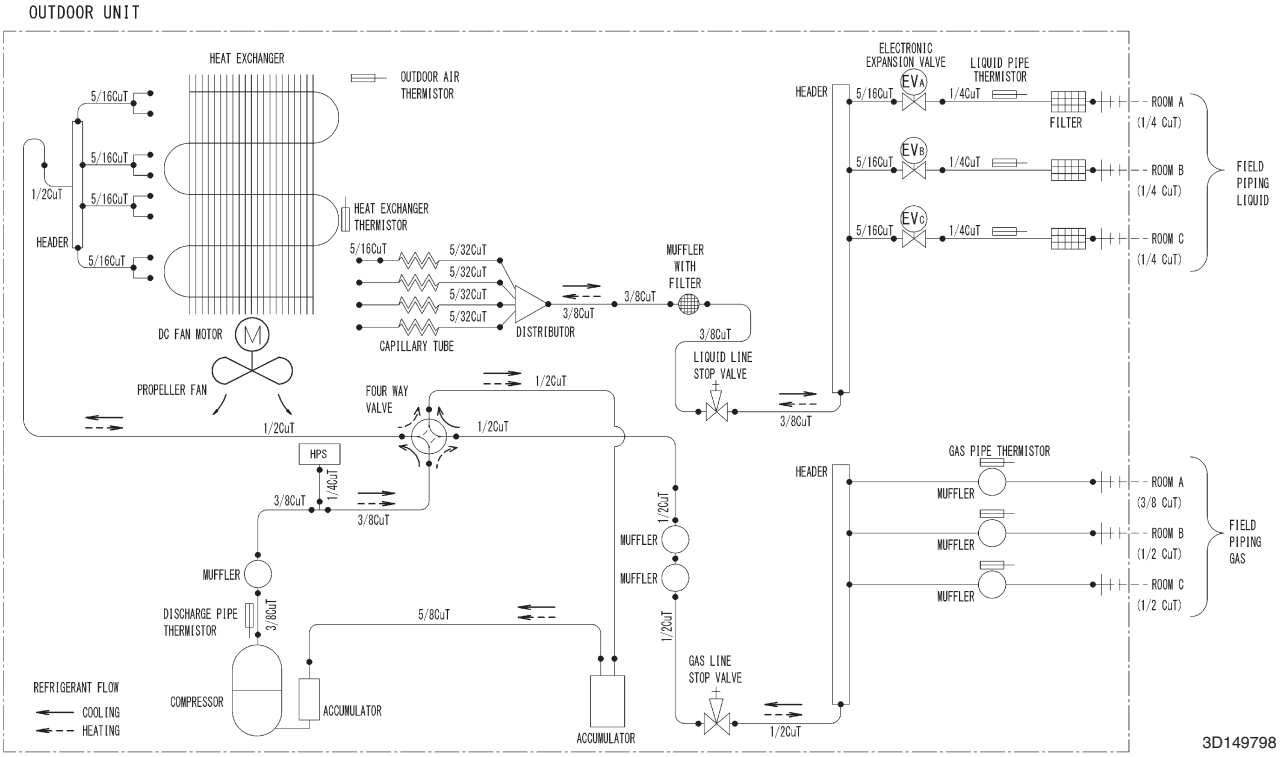

4MXM36AVJU9

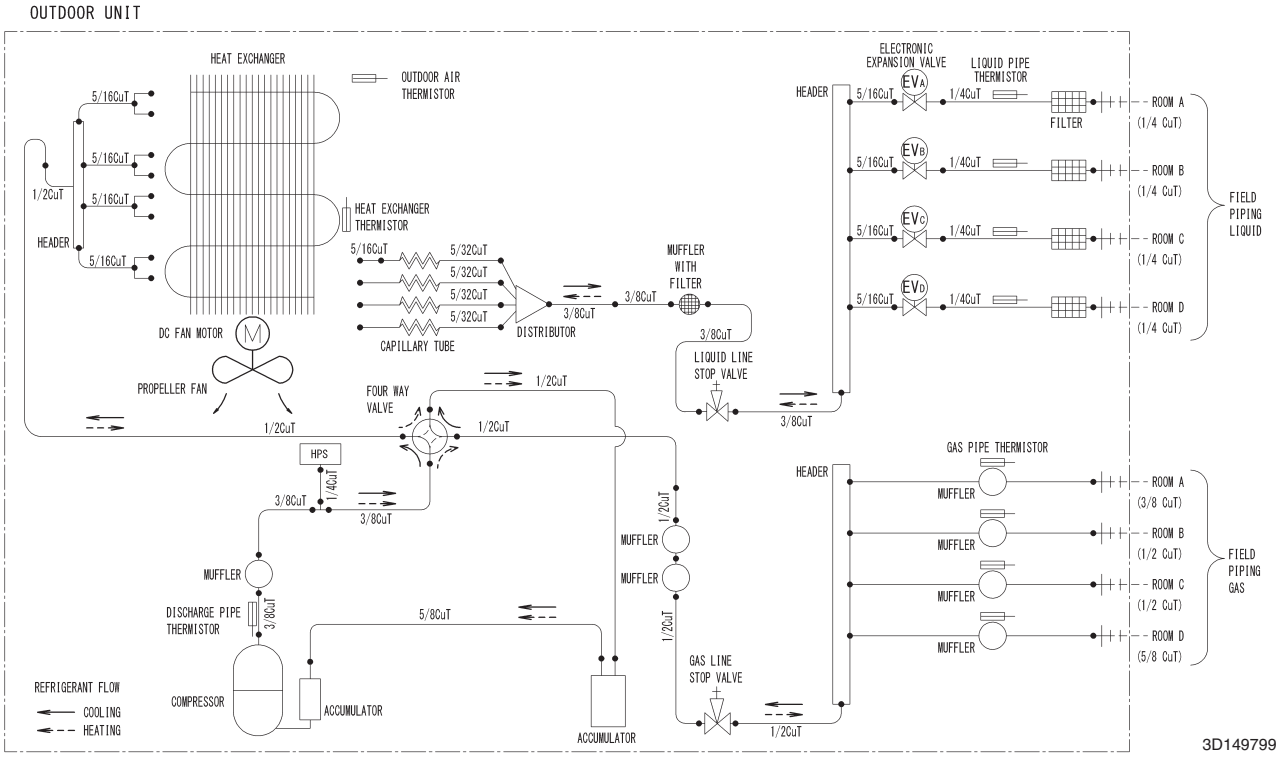

5MXM48AVJU9, 5MXT40AVJU9, 5MXTH40AVJU9

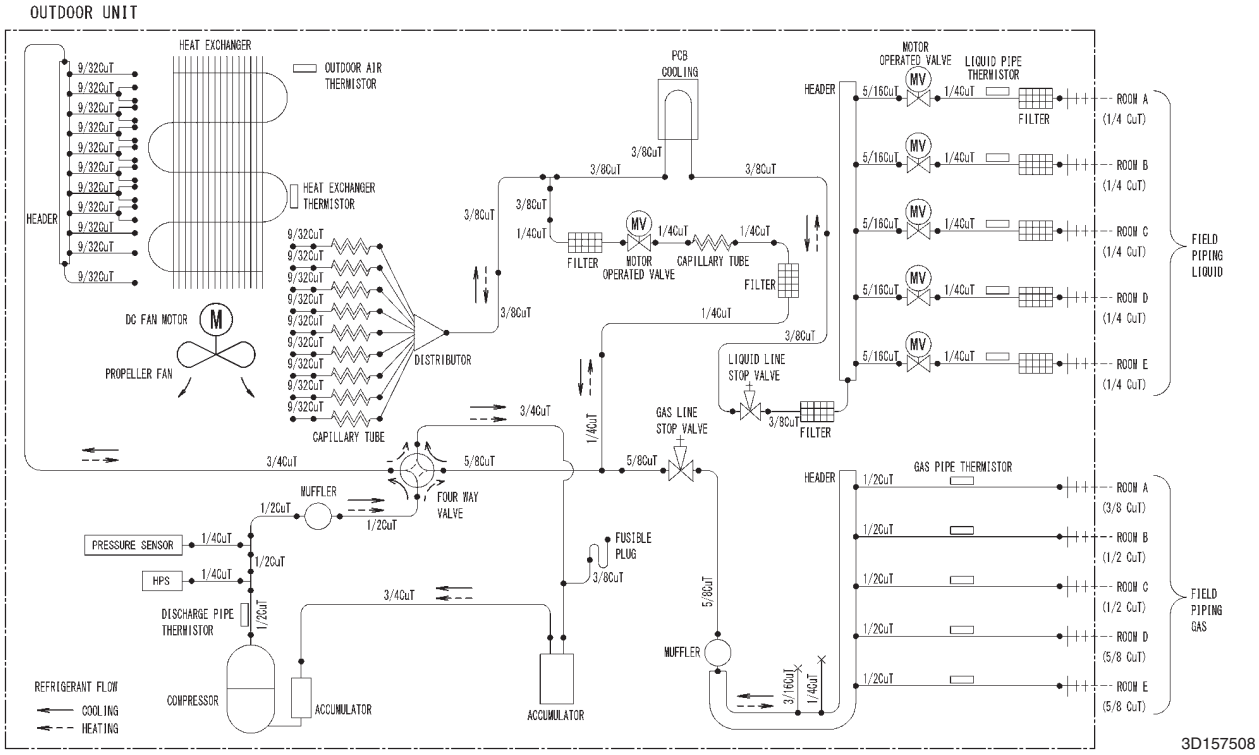

2MXT18AVJU9, 2MXTH18AVJU9

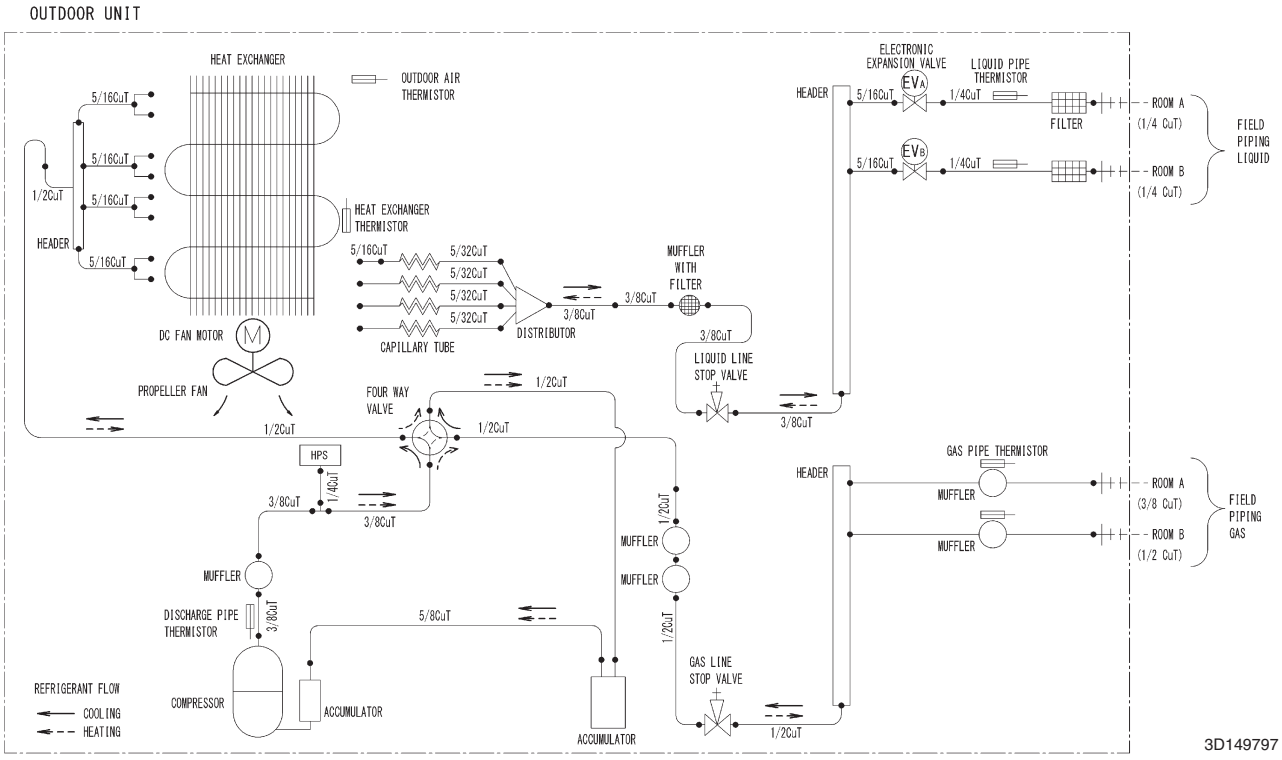

3MXT24AVJU9, 3MXTH24AVJU

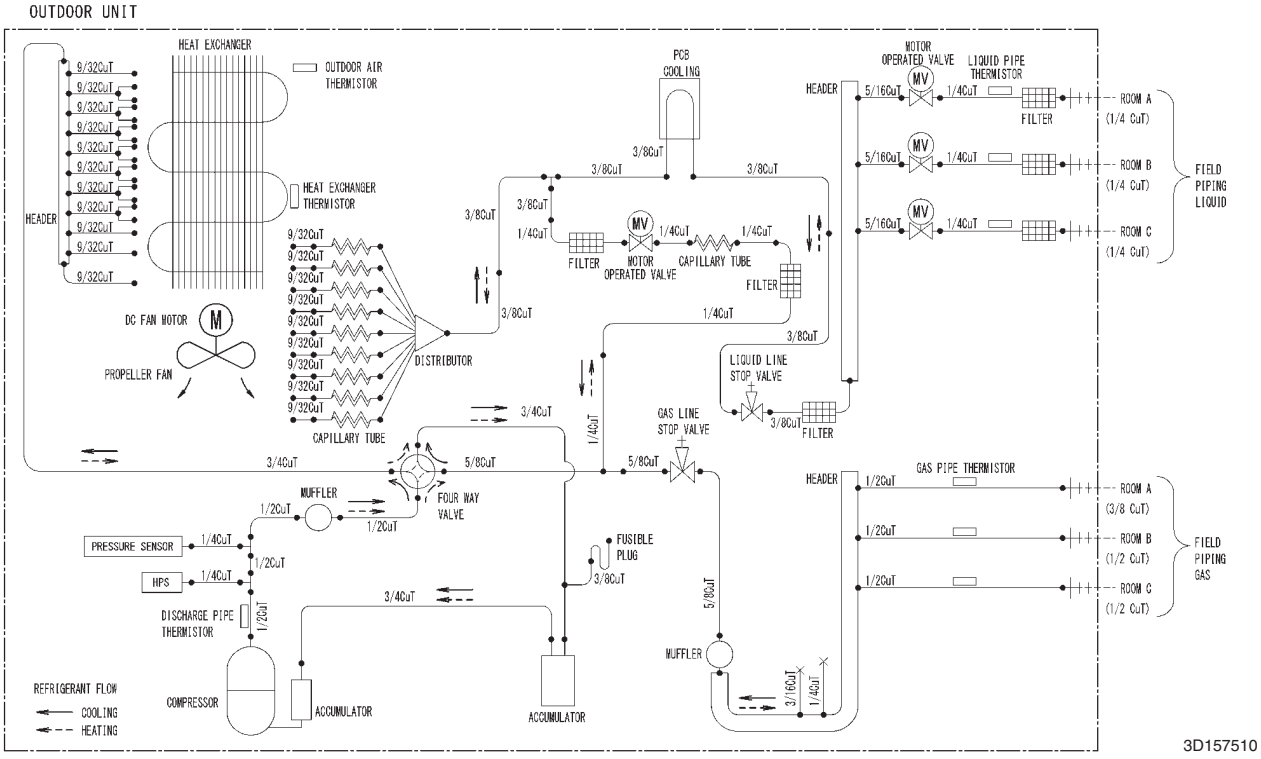

4MXT36AVJU9, 4MXTH36AVJU9

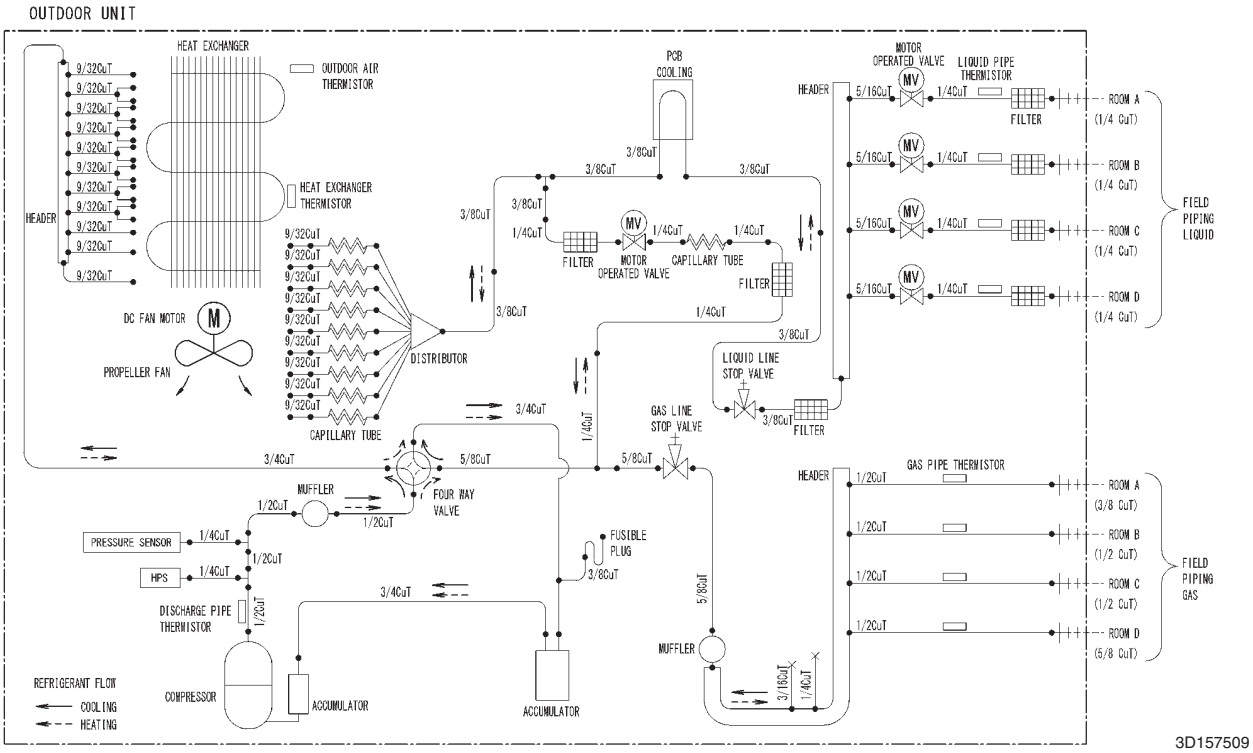

2. Wiring Diagrams

2.1 Indoor Unit

CTXV07AVJU9, FTXV09/12AVJU9

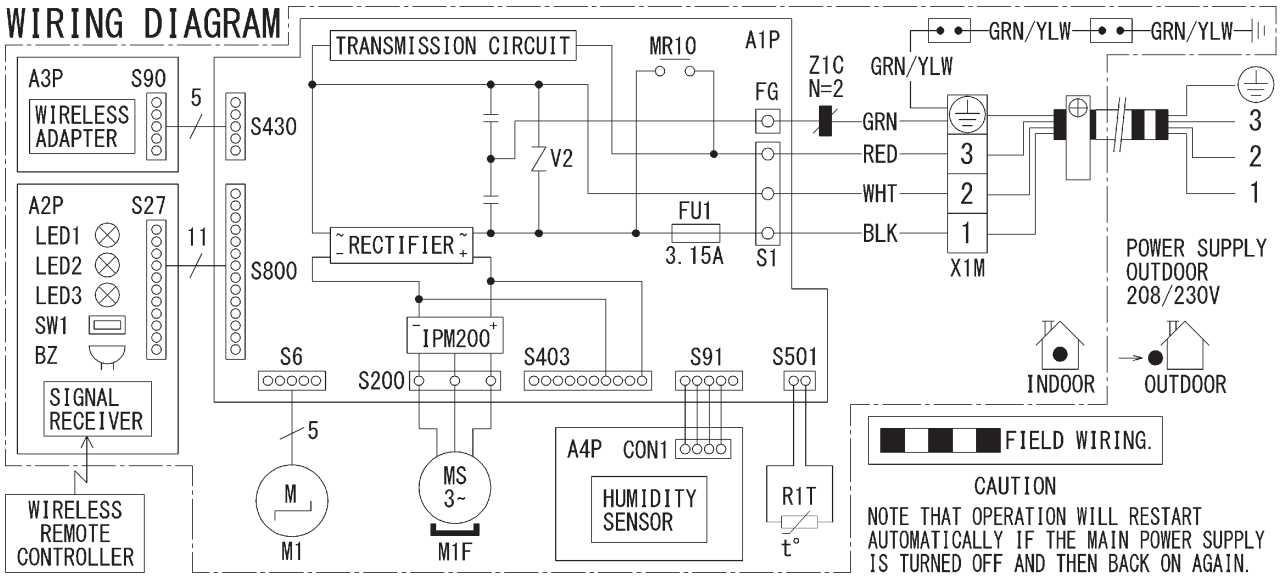

Note

A1P: Control PCB
A2P: Display/signal receiver PCB
A3P: Wireless LAN connection PCB
A4P: Humidity sensor PCB
Refer to page 26 for Printed Circuit Board Connector Wiring Diagram.

FTXV15/18/24AVJU9

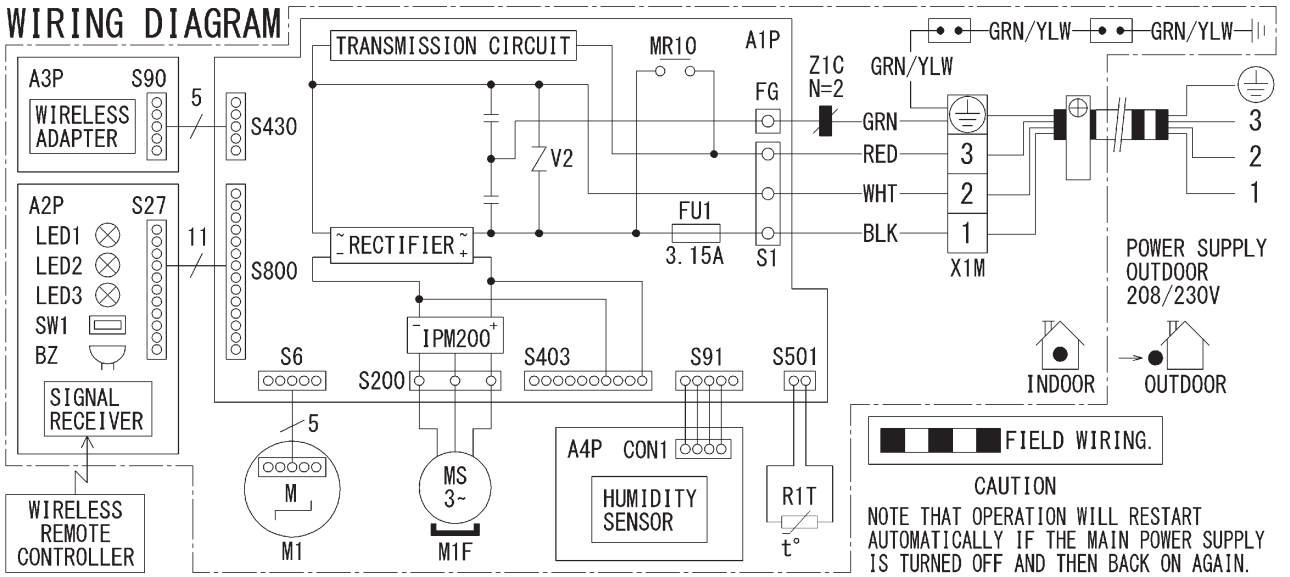

Note

A1P: Control PCB
A2P: Display/signal receiver PCB
A3P: Wireless LAN connection PCB
A4P: Humidity sensor PCB
Refer to page 26 for Printed Circuit Board Connector Wiring Diagram.

2.2 Outdoor Unit

2MXM18AVJU9, 2MXT18AVJU9

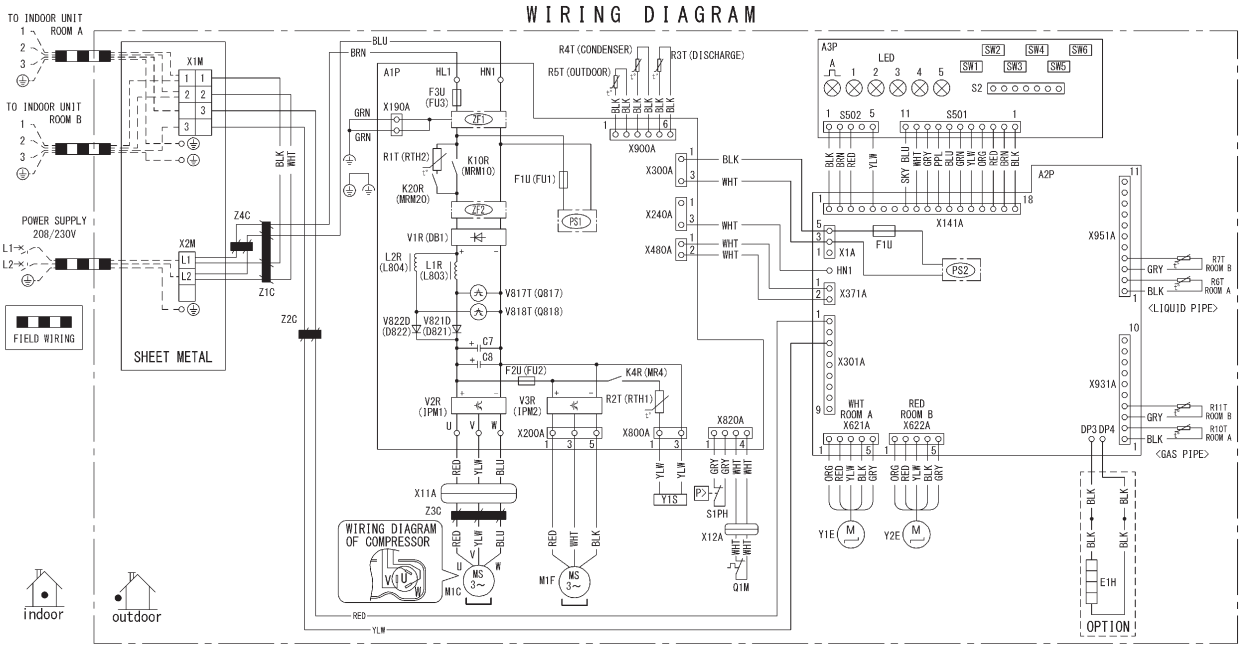

A1P～A3P	: PRINTED CIRCUIT BOARD	M1C	: COMPRESSOR MOTOR	SW3	: WIRING ERROR CHECK SW	X1M, X2M	: TERMINAL BLOCK
C7, C8	: CAPACITOR	M1F	: FAN MOTOR	SW4	: PRIORITY ROOM SETTING SW	Y1E, Y2E	: ELECTRONIC EXPANSION VALVE COIL
DP3, DP4, HL1, HN1 (A1P), HN1 (A2P), U, V, W	: TERMINAL	PS1, PS2	: SWITCHING POWER SUPPLY	SW5	: FUNCTION SW	Y1S	: REVERSING SOLENOID VALVE COIL
E1H	: HEATER	Q1M	: OVERLOAD PROTECTOR	SW6	: NIGHT QUIET MODE SETTING SW	Z1C～Z4C	: FERRITE CORE
F1U (A1P), F2U, F3U, F1U (A2P)	: FUSE	R1T～R11T	: THERMISTOR	S2～S502, X1A～X951A	: CONNECTOR	ZF1, ZF2	: NOISE FILTER
K4R, K1OR, K2OR	: MAGNETIC RELAY	S1PH	: HIGH PRESSURE SWITCH	V1R	: DIODE BRIDGE	⏚	: PROTECTIVE GROUND
L1, L2	: LIVE	SHEET METAL	: TERMINAL BLOCK FIXED PLATE	V2R, V3R	: INTELLIGENT POWER MODULE	⏚	: NOISELESS GROUND
L1R, L2R	: REACTOR	SW1	: FORCED OPERATION ON/OFF SW	V81T, V818T	: IGBT		
LED1～5, LEDA	: PILOT LAMP	SW2	: FORCED OPERATION MODE SELECT SW	V821D, V822D	: DIODE		

C: 3D149179

Note(s)

A1P: Main PCB
A2P: Sub PCB
A3P: Service monitor PCB
Refer to page 28 for Printed Circuit Board Connector Wiring Diagram.

3MXM24AVJU9

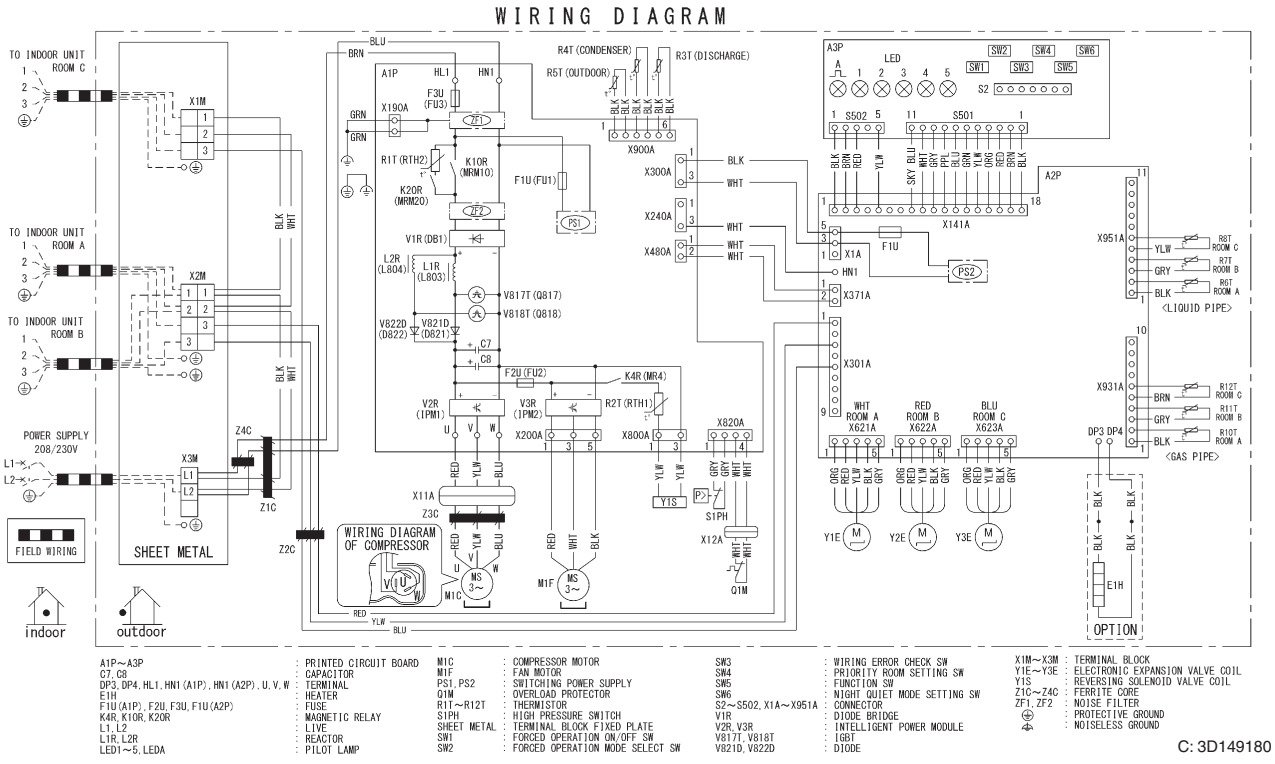

Note(s)

A1P: Main PCB
A2P: Sub PCB
A3P: Service monitor PCB
Refer to page 28 for Printed Circuit Board Connector Wiring Diagram.

4MXM36AVJU9

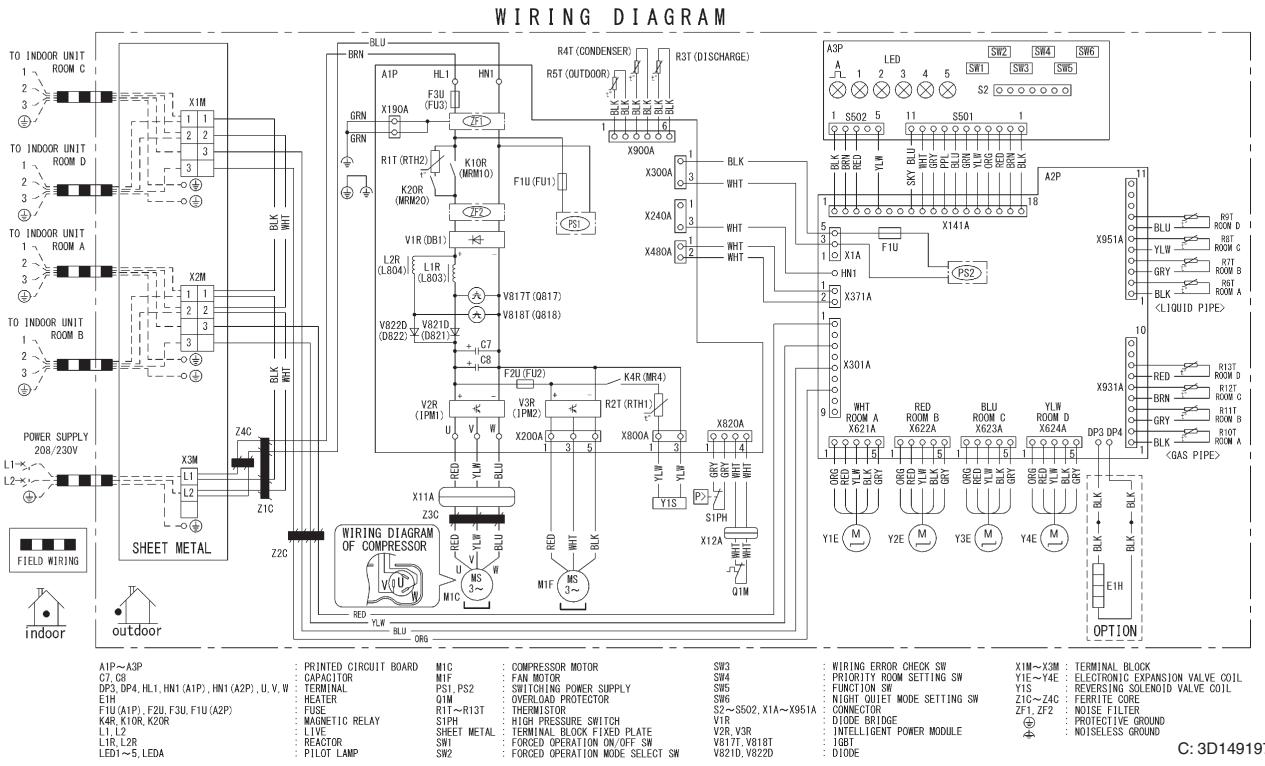

A1P～A3P	: PRINTED CIRCUIT BOARD	M1C	: COMPRESSOR MOTOR	SW3	: WIRING ERROR CHECK SW	X1M～X3M	: TERMINAL BLOCK
C7, C8	: CAPACITOR	M1F	: FAN MOTOR	SW4	: PRIORITY ROOM SETTING SW	Y1E～Y4E	: ELECTRONIC EXPANSION VALVE COIL
DP3, DP4, HL1, HN1 (A1P), HN1 (A2P), U, V, W	: TERMINAL	PS1, PS2	: SWITCHING POWER SUPPLY	SW5	: FUNCTION SW	Y1S	: REVERSING SOLENOID VALVE COIL
E1H	: HEATER	Q1M	: OVERLOAD PROTECTOR	SW6	: NIGHT QUIET MODE SETTING SW	Z1C～Z4C	: FERRITE CORE
F1U (A1P), F2U, F3U, F1U (A2P)	: FUSE	R1T～R13T	: THERMISTOR	S2～S502, X1A～X951A	: CONNECTOR	ZF1, ZF2	: NOISE FILTER
K4R, K1OR, K2OR	: MAGNETIC RELAY	S1PH	: HIGH PRESSURE SWITCH	V1R	: DIODE BRIDGE	⏚	: PROTECTIVE GROUND
L1, L2	: LIVE	SHEET METAL	: TERMINAL BLOCK FIXED PLATE	V2R, V3R	: INTELLIGENT POWER MODULE	⏚	: NOISELESS GROUND
L1R, L2R	: REACTOR	SW1	: FORCED OPERATION ON/OFF SW	V817T, V818T	: IGBT		
LED1～5, LEDA	: PILOT LAMP	SW2	: FORCED OPERATION MODE SELECT SW	V821D, V822D	: DIODE		

C: 3D149197

Note(s)

A1P: Main PCB
A2P: Sub PCB
A3P: Service monitor PCB
Refer to page 28 for Printed Circuit Board Connector Wiring Diagram.

5MXM48AVJU9, 5MXT40AVJU9

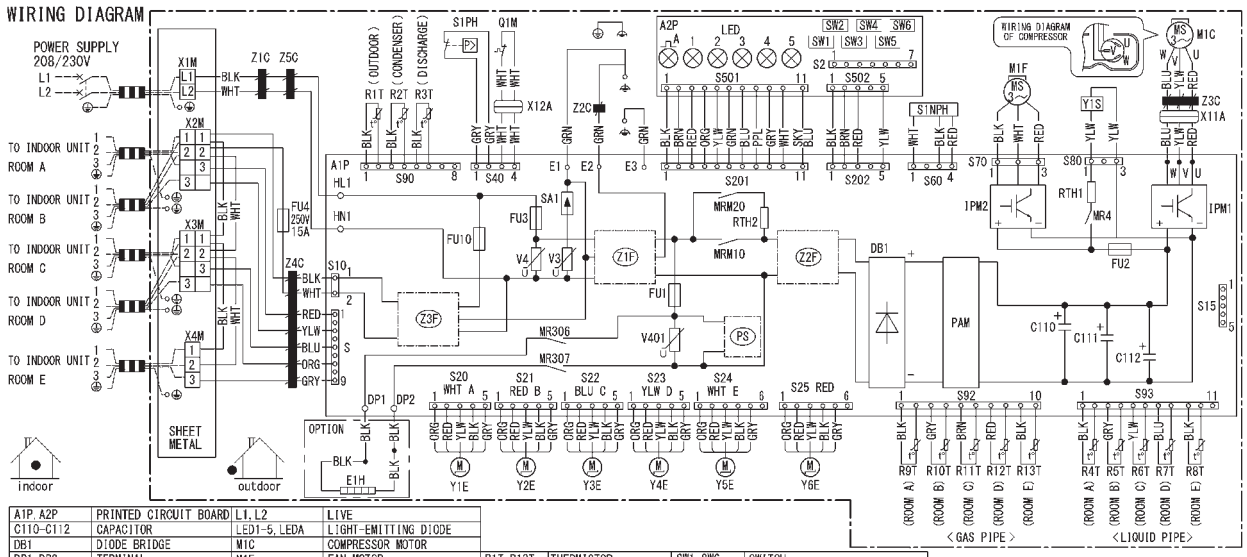

A1P, A2P	PRINTED CIRCUIT BOARD	L1, L2	LIVE						
C110–C112	CAPACITOR	LED1–5, LEDA	LIGHT-EMITTING DIODE						
DB1	DIODE BRIDGE	M1C	COMPRESSOR MOTOR						
DP1, DP2	TERMINAL	M1F	FAN MOTOR	R1T–R13T	THERMISTOR	SW1–SW6	SWITCH		
E1, E2, E3	TERMINAL	MR4, MR306, MR307	MAGNETIC RELAY	RTH1, RTH2	RESISTOR	V3, V4, V401	VARISTOR	Z1C–Z5C	FERRITE CORE
E1H	HEATER	MRM10, MRM20	MAGNETIC RELAY	S, S2–S502	CONNECTOR	X11A, X12A	CONNECTOR	Z1F–Z3F	NOISE FILTER
FU1–FU4, FU10	FUSE	PAM	PULSE AMPLITUDE MODULATION	S1NPH	PRESSURE SENSOR	X1M–X4M	TERMINAL BLOCK		FIELD WIRING
HL1, HN1	TERMINAL	PS	SWITCHING POWER SUPPLY	S1PH	HIGH PRESSURE SWITCH	Y1E–Y6E	ELECTRONIC EXPANSION VALVE COIL	⏚	PROTECTIVE GROUND
IPM1, IPM2	INTELLIGENT POWER MODULE	Q1M	OVERLOAD PROTECTOR	SA1	SURGE ARRESTOR	Y1S	REVERSING SOLENOID VALVE COIL	⏚	NOISELESS GROUND

C: 3D156355

Note(s)

A1P: Main PCB
A2P: Service monitor PCB
Refer to page 31 for Printed Circuit Board Connector Wiring Diagram.

2MXTH18AVJU9

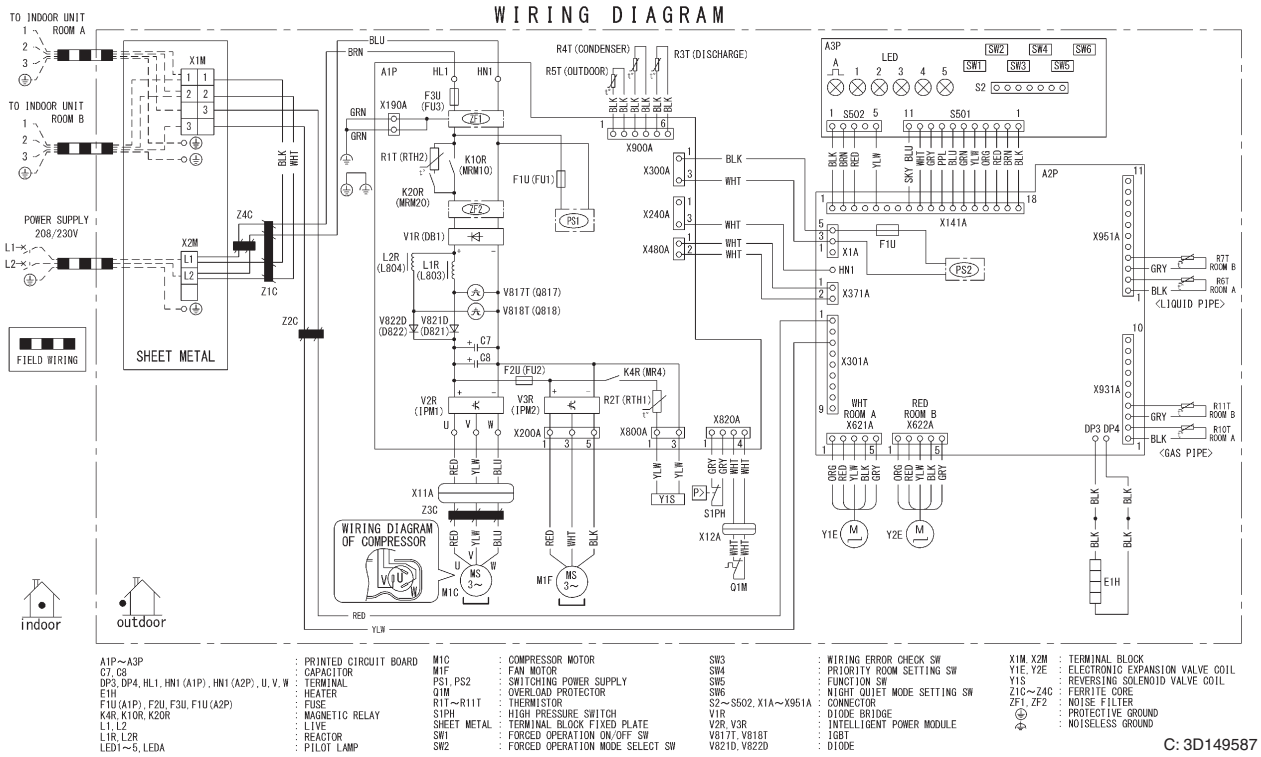

A1P～A3P	: PRINTED CIRCUIT BOARD	M1C	: COMPRESSOR MOTOR	SW3	: WIRING ERROR CHECK SW	X1M, X2M	: TERMINAL BLOCK
C7, C8	: CAPACITOR	M1F	: FAN MOTOR	SW4	: PRIORITY ROOM SETTING SW	Y1E, Y2E	: ELECTRONIC EXPANSION VALVE COIL
DP3, DP4, HL1, HN1 (A1P), HN1 (A2P), U, V, W	: TERMINAL	PS1, PS2	: SWITCHING POWER SUPPLY	SW5	: FUNCTION SW	Y1S	: REVERSING SOLENOID VALVE COIL
E1H	: HEATER	Q1M	: OVERLOAD PROTECTOR	SW6	: NIGHT QUIET MODE SETTING SW	Z1C～Z4C	: FERRITE CORE
F1U (A1P), F2U, F3U, F1U (A2P)	: FUSE	R1T～R11T	: THERMISTOR	S2～S502, X1A～X951A	: CONNECTOR	ZF1, ZF2	: NOISE FILTER
K4R, K1OR, K2OR	: MAGNETIC RELAY	S1PH	: HIGH PRESSURE SWITCH	V1R	: DIODE BRIDGE	⏚	: PROTECTIVE GROUND
L1, L2	: LIVE	SHEET METAL	: TERMINAL BLOCK FIXED PLATE	V2R, V3R	: INTELLIGENT POWER MODULE	⏚	: NOISELESS GROUND
L1R, L2R	: REACTOR	SW1	: FORCED OPERATION ON/OFF SW	V817T, V818T	: IGBT		
LED1～5, LEDA	: PILOT LAMP	SW2	: FORCED OPERATION MODE SELECT SW	V821D, V822D	: DIODE		

C: 3D149587

Note(s)

A1P: Main PCB
A2P: Sub PCB
A3P: Service monitor PCB
Refer to page 28 for Printed Circuit Board Connector Wiring Diagram.

3MXT24AVJU9

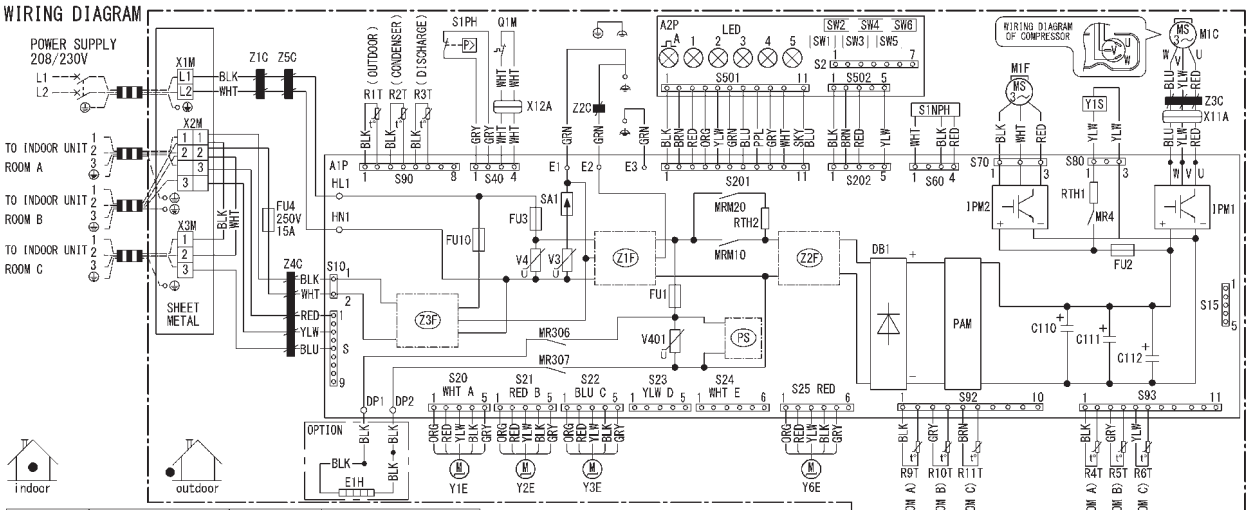

A1P, A2P	PRINTED CIRCUIT BOARD	L1, L2	LIVE						
C110-C112	CAPACITOR	LED1-5, LEDA	LIGHT-EMITTING DIODE						
DB1	DIODE BRIDGE	M1C	COMPRESSOR MOTOR						
DP1, DP2	TERMINAL	M1F	FAN MOTOR	R1T-R11T	THERMISTOR	SW1-SW6	SWITCH		
E1, E2, E3	TERMINAL	MR4, MR306, MR307	MAGNETIC RELAY	RTH1, RTH2	RESISTOR	V3, V4, V401	VARISTOR	Z1C-Z5C	FERRITE CORE
E1H	HEATER	MRM10, MRM20	MAGNETIC RELAY	S, S2-S502	CONNECTOR	X11A, X12A	CONNECTOR	Z1F-Z3F	NOISE FILTER
FU1-FU4, FU10	FUSE	PAM	PULSE AMPLITUDE MODULATION	S1NPH	PRESSURE SENSOR	X1M-X3M	TERMINAL BLOCK		FIELD WIRING
HL1, HN1	TERMINAL	PS	SWITCHING POWER SUPPLY	S1PH	HIGH PRESSURE SWITCH	Y1E-Y6E	ELECTRONIC EXPANSION VALVE COIL		PROTECTIVE GROUND
IPM1, IPM2	INTELLIGENT POWER MODULE	Q1M	OVERLOAD PROTECTOR	SA1	SURGE ARRESTOR	Y1S	REVERSING SOLENOID VALVE COIL		NOISELESS GROUND

C: 3D156320

Note(s)

A1P: Main PCB
A2P: Service monitor PCB
Refer to page 31 for Printed Circuit Board Connector Wiring Diagram.

3MXTH24AVJU9

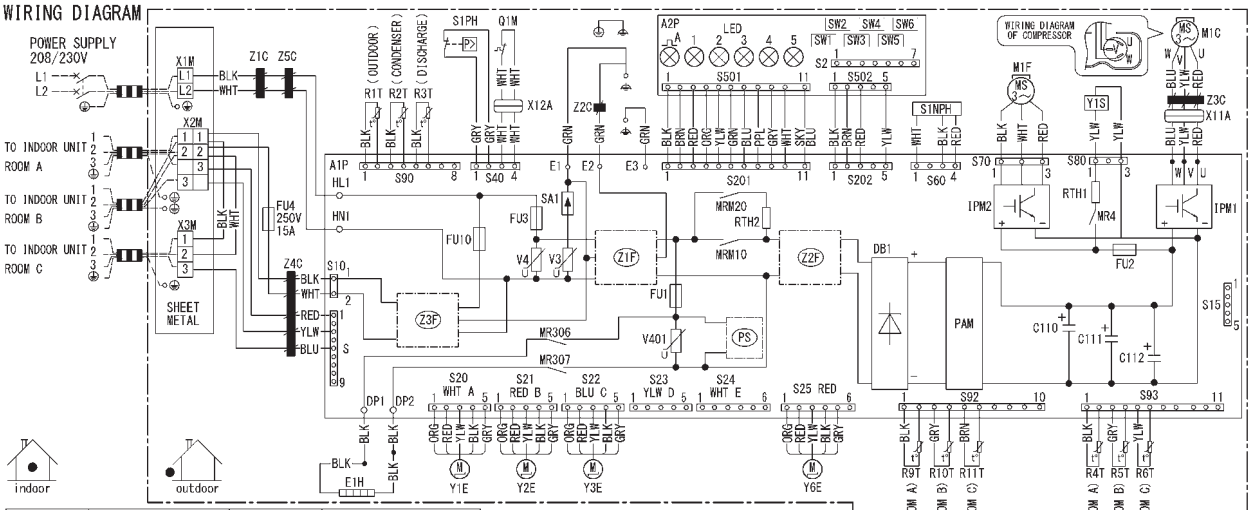

A1P, A2P	PRINTED CIRCUIT BOARD	L1, L2	LIVE						
C110–C112	CAPACITOR	LED1–5, LEDA	LIGHT-EMITTING DIODE						
DB1	DIODE BRIDGE	M1C	COMPRESSOR MOTOR						
DP1, DP2	TERMINAL	M1F	FAN MOTOR	R1T–R11T	THERMISTOR	SW1–SW6	SWITCH		
E1, E2, E3	TERMINAL	MR4, MR306, MR307	MAGNETIC RELAY	RTH1, RTH2	RESISTOR	V3, V4, V401	VARISTOR	Z1C–Z5C	FERRITE CORE
E1H	HEATER	MRM10, MRM20	MAGNETIC RELAY	S, S2–S502	CONNECTOR	X11A, X12A	CONNECTOR	Z1F–Z3F	NOISE FILTER
FU1–FU4, FU10	FUSE	PAM	PULSE AMPLITUDE MODULATION	S1NPH	PRESSURE SENSOR	X1M–X3M	TERMINAL BLOCK		FIELD WIRING
HL1, HN1	TERMINAL	PS	SWITCHING POWER SUPPLY	S1PH	HIGH PRESSURE SWITCH	Y1E–Y6E	ELECTRONIC EXPANSION VALVE COIL	⏚	PROTECTIVE GROUND
IPM1, IPM2	INTELLIGENT POWER MODULE	Q1M	OVERLOAD PROTECTOR	SA1	SURGE ARRESTOR	Y1S	REVERSING SOLENOID VALVE COIL	⏚	NOISELESS GROUND

C: 3D156321

Note(s)

A1P: Main PCB
A2P: Service monitor PCB
Refer to page 31 for Printed Circuit Board Connector Wiring Diagram.

4MXT36AVJU9

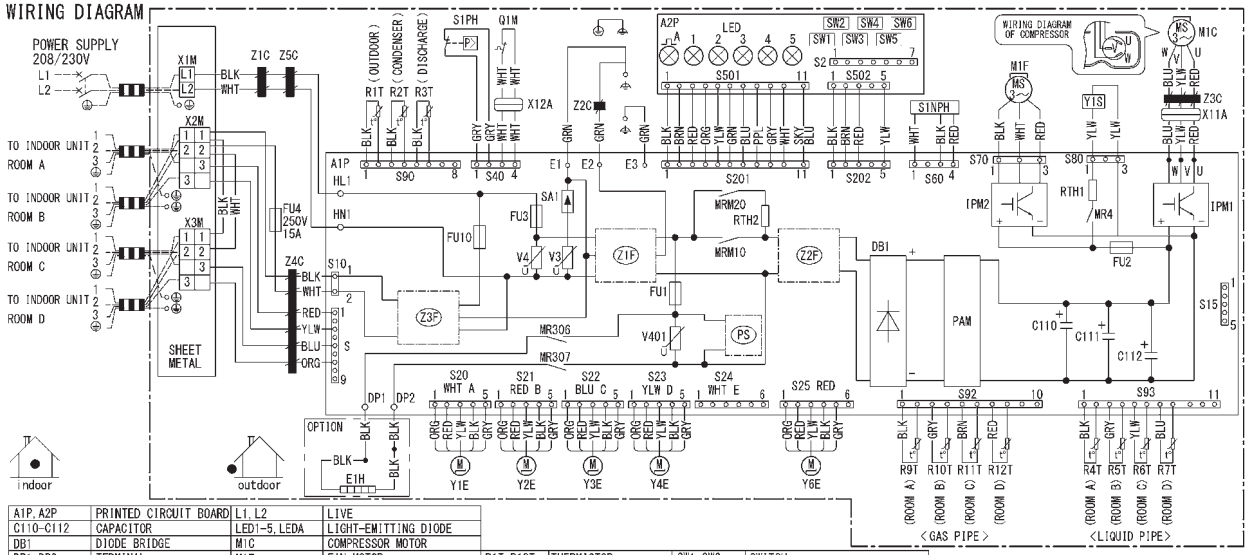

A1P, A2P	PRINTED CIRCUIT BOARD	L1, L2	LINE						
C110-C112	CAPACITOR	LED1-5, LEDA	LIGHT-EMITTING DIODE						
DB1	DIODE BRIDGE	M1C	COMPRESSOR MOTOR						
DP1, DP2	TERMINAL	M1F	FAN MOTOR	R1T-R12T	THERMISTOR	SW1-SW6	SWITCH		
E1, E2, E3	TERMINAL	MR4, MR306, MR307	MAGNETIC RELAY	RTH1, RTH2	RESISTOR	V3, V4, V401	VARISTOR	Z1C-Z5C	FERRITE CORE
E1H	HEATER	MRM10, MRM20	MAGNETIC RELAY	S, S2-S502	CONNECTOR	X11A, X12A	CONNECTOR	Z1F-Z3F	NOISE FILTER
FU1-FU4, FU10	FUSE	PAM	PULSE AMPLITUDE MODULATION	S1NPH	PRESSURE SENSOR	X1M-X3M	TERMINAL BLOCK		FIELD WIRING
HL1, HN1	TERMINAL	PS	SWITCHING POWER SUPPLY	S1PH	HIGH PRESSURE SWITCH	Y1E-Y6E	ELECTRONIC EXPANSION VALVE COIL	⏚	PROTECTIVE GROUND
IPM1, IPM2	INTELLIGENT POWER MODULE	Q1M	OVERLOAD PROTECTOR	SA1	SURGE ARRESTOR	Y1S	REVERSING SOLENOID VALVE COIL	⏚	NOISELESS GROUND

C: 3D156353

Note(s)

A1P: Main PCB
A2P: Service monitor PCB
Refer to page 31 for Printed Circuit Board Connector Wiring Diagram.

4MXTH36AVJU9

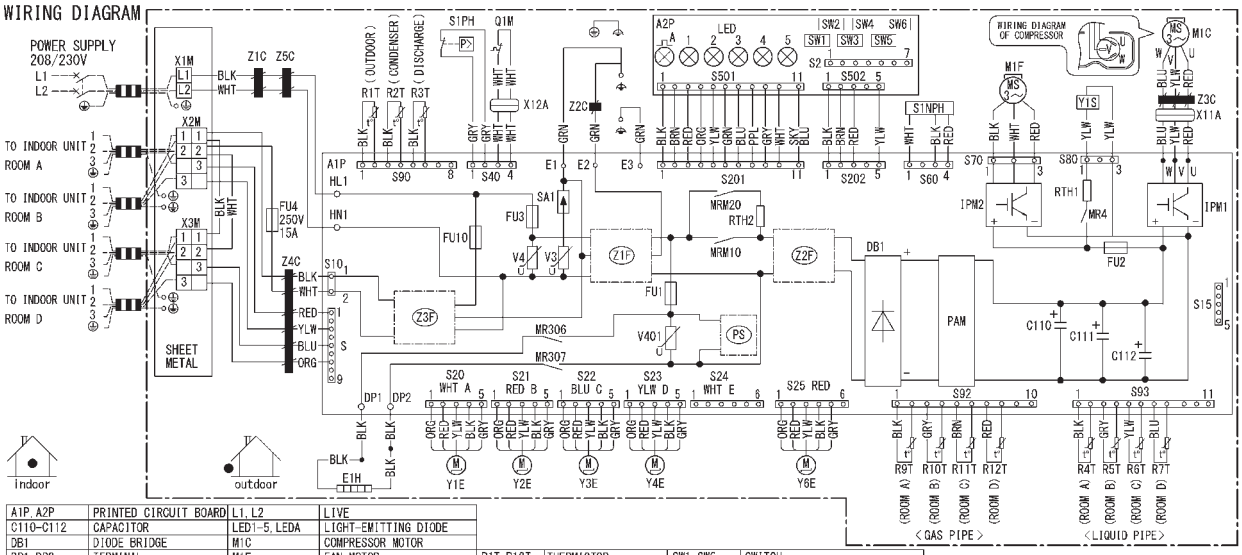

A1P, A2P	PRINTED CIRCUIT BOARD	L1, L2	LIVE						
C110–C112	CAPACITOR	LED1–5, LEDA	LIGHT-EMITTING DIODE						
DB1	DIODE BRIDGE	M1C	COMPRESSOR MOTOR						
DP1, DP2	TERMINAL	M1F	FAN MOTOR	R1T–R12T	THERMISTOR	SW1–SW6	SWITCH		
E1, E2, E3	TERMINAL	MR4, MR306, MR307	MAGNETIC RELAY	RTH1, RTH2	RESISTOR	V3, V4, V401	VARISTOR	Z1C–Z5C	FERRITE CORE
E1H	HEATER	MRM10, MRM20	MAGNETIC RELAY	S, S2–S502	CONNECTOR	X11A, X12A	CONNECTOR	Z1F–Z3F	NOISE FILTER
FU1–FU4, FU10	FUSE	PAM	PULSE AMPLITUDE MODULATION	S1NPH	PRESSURE SENSOR	X1M–X3M	TERMINAL BLOCK		FIELD WIRING
HL1, HN1	TERMINAL	PS	SWITCHING POWER SUPPLY	S1PH	HIGH PRESSURE SWITCH	Y1E–Y6E	ELECTRONIC EXPANSION VALVE COIL	⏚	PROTECTIVE GROUND
IPM1, IPM2	INTELLIGENT POWER MODULE	Q1M	OVERLOAD PROTECTOR	SA1	SURGE ARRESTOR	Y1S	REVERSING SOLENOID VALVE COIL	⏚	NOISELESS GROUND

C: 3D156354

Note(s)

A1P: Main PCB
A2P: Service monitor PCB
Refer to page 31 for Printed Circuit Board Connector Wiring Diagram.

5MXTH40AVJU9

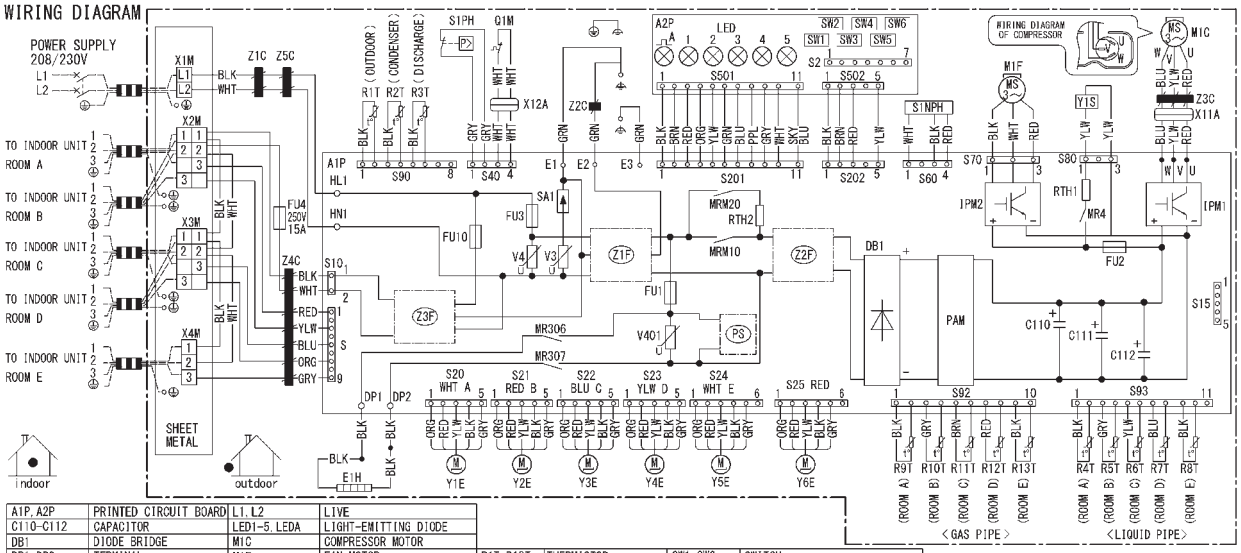

A1P, A2P	PRINTED CIRCUIT BOARD	L1, L2	LIVE						
C110-C112	CAPACITOR	LED1-5, LEDA	LIGHT-EMITTING DIODE						
DB1	DIODE BRIDGE	M1C	COMPRESSOR MOTOR						
DP1, DP2	TERMINAL	M1F	FAN MOTOR	R1T-R13T	THERMISTOR	SW1-SW6	SWITCH		
E1, E2, E3	TERMINAL	MR4, MR306, MR307	MAGNETIC RELAY	RTH1, RTH2	RESISTOR	V3, V4, V401	VARISTOR	Z1C-Z5C	FERRITE CORE
E1H	HEATER	MRM10, MRM20	MAGNETIC RELAY	S, S2-S502	CONNECTOR	X1!A, X12A	CONNECTOR	Z1F-Z3F	NOISE FILTER
FU1-FU4, FU10	FUSE	PAM	PULSE AMPLITUDE MODULATION	S1NPH	PRESSURE SENSOR	X1M-X4M	TERMINAL BLOCK		FIELD WIRING
HL1, HN1	TERMINAL	PS	SWITCHING POWER SUPPLY	S1PH	HIGH PRESSURE SWITCH	Y1E-Y6E	ELECTRONIC EXPANSION VALVE COIL		PROTECTIVE GROUND
IPM1, IPM2	INTELLIGENT POWER MODULE	Q1M	OVERLOAD PROTECTOR	SA1	SURGE ARRESTOR	Y1S	REVERSING SOLENOID VALVE COIL		NOISELESS GROUND

C: 3D156356

Note(s)

A1P: Main PCB
A2P: Service monitor PCB
Refer to page 31 for Printed Circuit Board Connector Wiring Diagram.

3. Operation Limit

2MXM18AVJU9, 3MXM24AVJU9, 4MXM36AVJU9

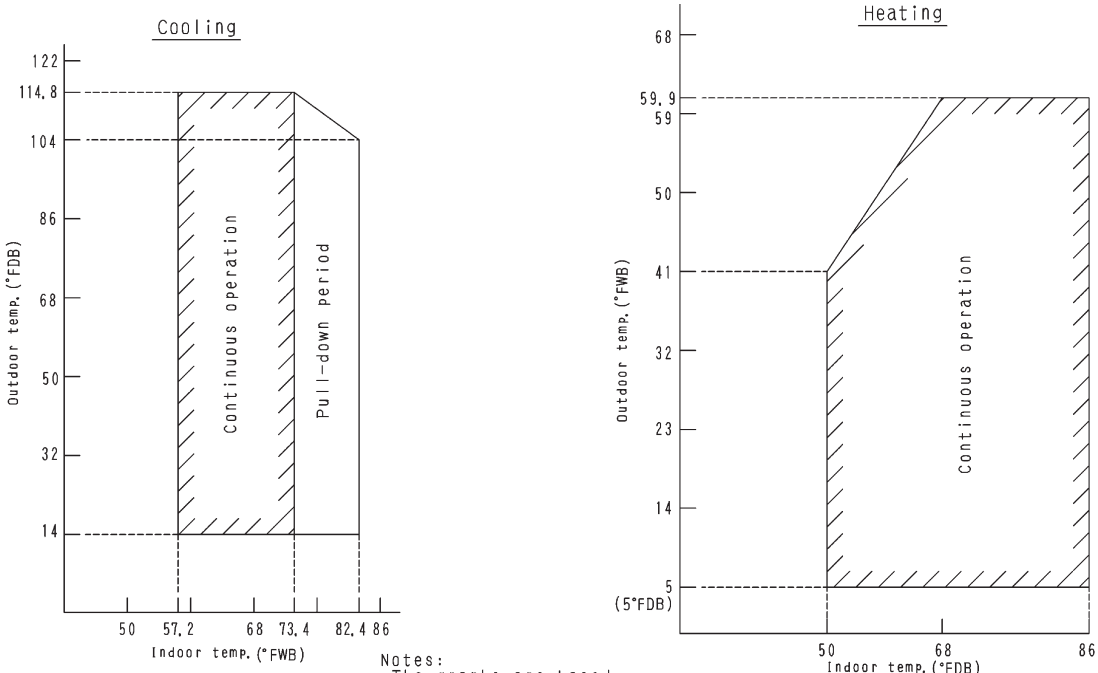

Notes:
The graphs are based on the following conditions.
- Equivalent piping length 25ft
- Level difference 0ft
- Air flow rate High

3D048149D

2MXT18AVJU9, 2MXTH18AVJU9

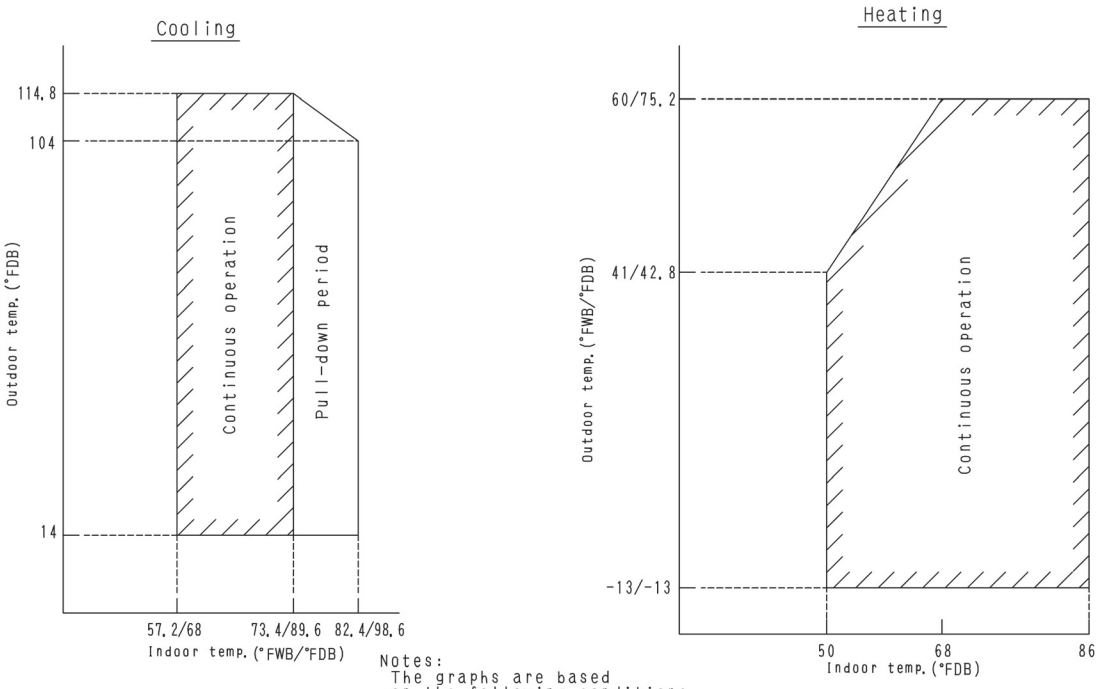

Notes:
The graphs are based on the following conditions.
- Equivalent piping length 25ft
- Level difference 0ft
- Air flow rate High

3D101428B

5MXM48AVJU

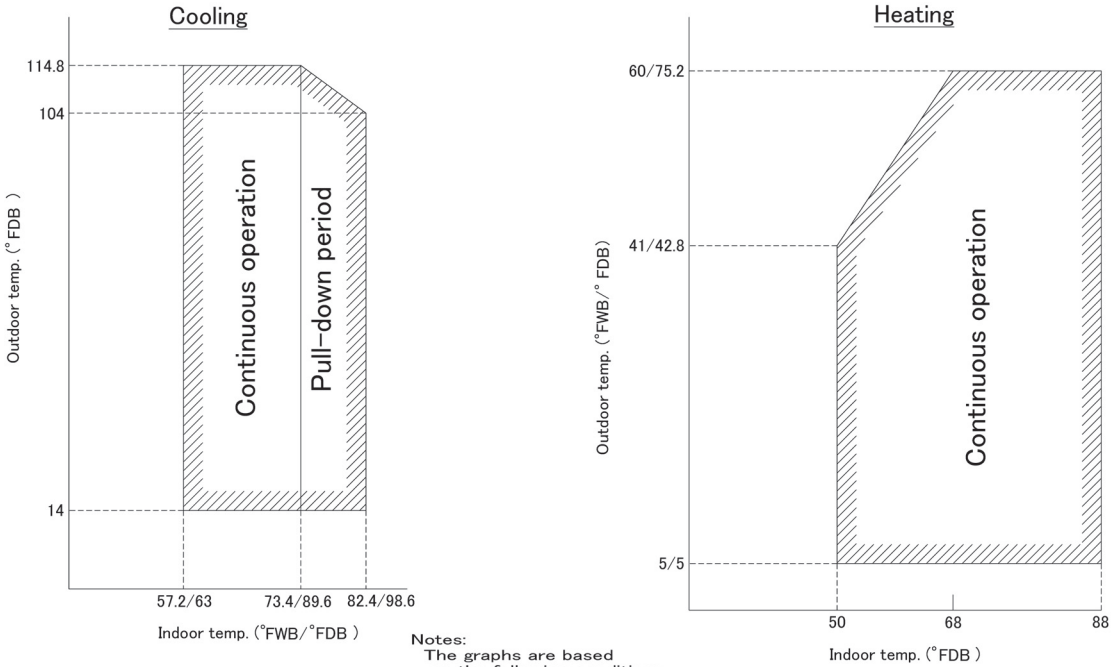

Notes:
The graphs are based on the following conditions.
- Equivalent piping length 25ft per room
- Level difference 0ft
- Air flow rate High
- All connection ports are connected to the indoor units.

3D158370

3MXT24AVJU, 3MXTH24AVJU, 4MXT36AVJU, 4MXTH36AVJU, 5MXT40AVJU, 5MXTH40AVJU

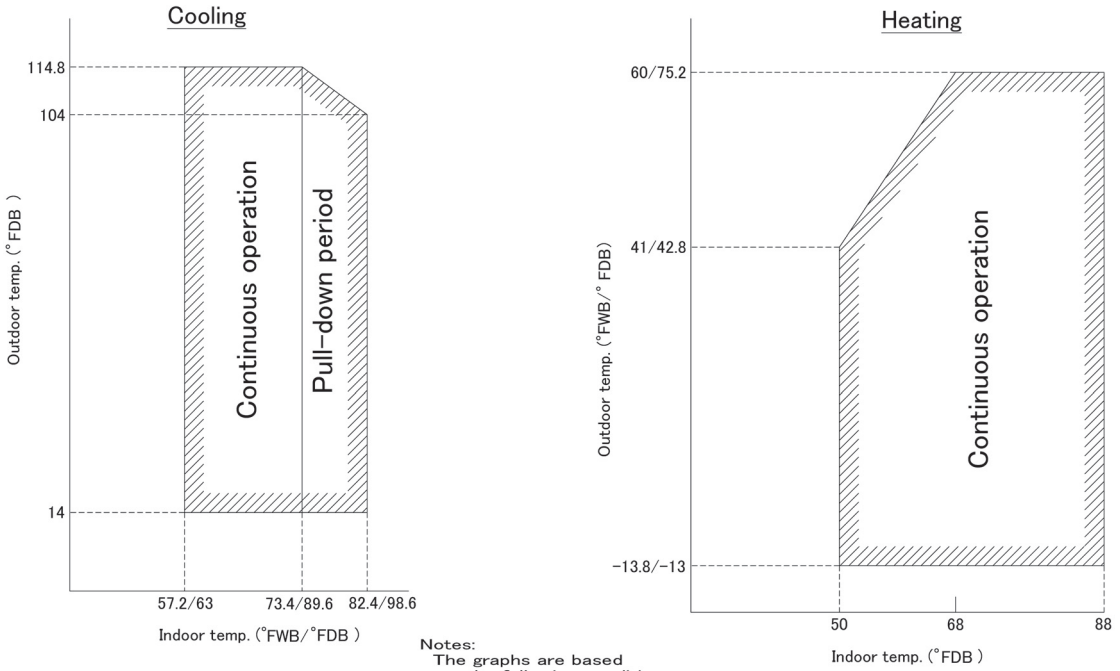

Notes:
The graphs are based on the following conditions.
- Equivalent piping length 25ft per room
- Level difference 0ft
- Air flow rate High
- All connection ports are connected to the indoor units.

3D158371

Warning

- Daikin products are manufactured for export to numerous countries throughout the world. Prior to purchase, please confirm with your local authorized importer, distributor and/or retailer whether this product conforms to the applicable standards, and is suitable for use, in the region where the product will be used. This statement does not purport to exclude, restrict or modify the application of any local legislation.
- Ask a qualified installer or contractor to install this product. Do not try to install the product yourself. Improper installation can result in water or refrigerant leakage, electrical shock, fire or explosion.
- Use only those parts and accessories supplied or specified by Daikin. Ask a qualified installer or contractor to install those parts and accessories. Use of unauthorized parts and accessories or improper installation of parts and accessories can result in water or refrigerant leakage, electrical shock, fire or explosion.
- Read the user's manual carefully before using this product. The user's manual provides important safety instructions and warnings. Be sure to follow these instructions and warnings.

If you have any inquiries, please contact your local importer, distributor and/or retailer.

Cautions on product corrosion

1. Air conditioners should not be installed in areas where corrosive gases, such as acid gas or alkaline gas, are produced.
2. If the outdoor unit is to be installed close to the sea shore, direct exposure to the sea breeze should be avoided. If you need to install the outdoor unit close to the sea shore, contact your local distributor.

© All rights reserved

●Specifications, designs and other content appearing in this brochure are current as of October 2025 but subject to change without notice.

SiUS122410EA
10/2025 AK.K