HONDA

Owner's Manual

GENERATOR

EG4000CL

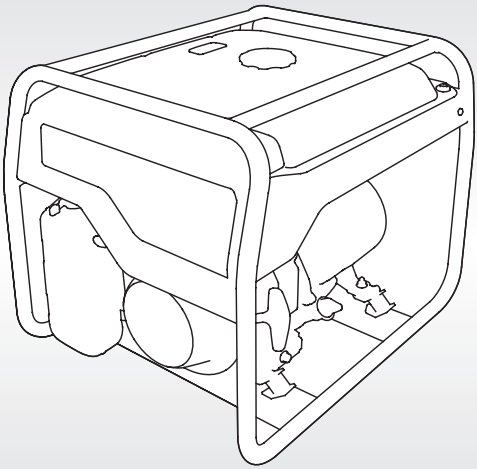

See page 12 for instructions on assembling your generator.
See page 15 for Initial Use Instructions.

ⓒ 2024 Honda Motor Co., Ltd. -All Rights Reserved

⚠ WARNING: ⚠

The engine exhaust from this product contains chemicals known to the State of California to cause cancer, birth defects or other reproductive harm.

⚠ WARNING

Exhaust contains poisonous carbon monoxide gas that can build up to dangerous levels in enclosed or partly enclosed areas.

Breathing carbon monoxide can cause unconsciousness or death.

Never run this product's engine in an enclosed, or even partly enclosed area.

Keep this owner's manual handy so that you can refer to it any time.
This owner's manual is considered a permanent part of the generator and should remain with the generator if resold.

The information and specifications included in this publication were in effect at the time of approval for printing. Honda Motor Co., Ltd. reserves the right, however, to discontinue or change specifications or design at any time without notice and without incurring any obligation whatsoever.

The illustration may vary according to the type.

INTRODUCTION

Thank you for purchasing a Honda generator.

We would like to help you get the best results from your new generator and to operate it safely. This manual contains the information on how to do that; please read it carefully.

We suggest you read the "Distributor's Limited Warranty" (see page 81) to fully understand its coverage and your responsibilities of ownership.

When your generator needs scheduled maintenance, keep in mind that your Honda servicing dealer is specially trained in servicing Honda generators and is supported by the parts and service divisions of American Honda. Your Honda servicing dealer is dedicated to your satisfaction and will be pleased to answer your questions and concerns.

INTRODUCTION

A FEW WORDS ABOUT SAFETY

Your safety and the safety of others are very important.

We have provided important safety messages in this manual and on the generator. This information alerts you to potential hazards that could hurt you or others. Please read these messages carefully.

Of course, it is not practical or possible to warn you about all the hazards associated with operating or maintaining a generator. You must use your own good judgment.

You will find important safety information in a variety of forms:

- **Safety Labels** — on the generator.
- **Instructions** — how to use this generator correctly and safely.
- **Safety Headings** — such as *IMPORTANT SAFETY INFORMATION*.
- **Safety Messages** — preceded by a safety alert symbol ⚠ and one of three signal words, DANGER, WARNING, or CAUTION.

  These signal words mean:

⚠ DANGER You WILL be KILLED or SERIOUSLY HURT if you do not follow instructions.

⚠ WARNING You CAN be KILLED or SERIOUSLY HURT if you do not follow instructions.

⚠ CAUTION You CAN be HURT if you do not follow instructions.

This entire book is filled with important safety information - please read it carefully.

DAMAGE PREVENTION MESSAGES

In addition to the above, you will find information preceded by a NOTICE symbol. That information is intended to help you avoid damage to your generator, other property, or the environment.

CONTENTS

INTRODUCTION 1

GENERATOR SAFETY 6
IMPORTANT SAFETY INFORMATION 6
Operator Responsibility 6
Carbon Monoxide Hazards 7
Electric Shock Hazards 8
Fire and Burn Hazards 8
Refuel With Care 9
Vehicles and Transportation Hazards 9
SAFETY LABEL LOCATIONS 10

ASSEMBLY 12
SAFETY 12
The Importance of Proper Assembly 12
ASSEMBLY 13
Handle Installation (Optional Parts) 13
Wheel Kit Installation (Optional Parts) 14

INITIAL USE INSTRUCTIONS 15
ENGINE OIL 15
ENGINE OIL RECOMMENDATIONS 16
FUEL 17
FUEL RECOMMENDATIONS 19

CONTROLS & FEATURES 20
COMPONENT & CONTROL LOCATIONS 20
CONTROLS 22
Engine Switch 22
Starter Grip 22
Fuel Valve Lever 23
Choke Lever 23
CO-MINDER (CO Shut-off System) 24
Voltage Selector Switch 26
AC Circuit Breaker 26
AC Circuit Protectors 27
Ground Fault Circuit Interrupter (GFCI) Receptacle 28
FEATURES 29
Oil Alert® System 29
Automatic Engine Stop Function 29
Fuel Gauge 30
Ground Terminal 30

CONTENTS

BEFORE OPERATION 31
ARE YOU READY TO GET STARTED? 31
Knowledge 31
IS YOUR GENERATOR READY TO GO? 31
Check the Engine 32
Check the GFCI 32
AC Appliance and Power Cord 32
ENGINE OIL LEVEL CHECK 33
AIR FILTER CHECK 34
SAFE OPERATING PRECAUTIONS 36

OPERATION 37
STARTING THE ENGINE 37
STOPPING THE ENGINE 40
HOW TO RESTART WHEN STOPPED BY CO-MINDER (CO SHUT-OFF SYSTEM) 41
GFCI OPERATION CHECK 42
AC OPERATION 45
AC Applications 47
AC Receptacle Selection 48
Power Producing Circuits 48
Voltage Selector Switch 49
STANDBY POWER 50
Connections to a Building's Electrical System 50
System Ground 50
Special Requirements 51

SERVICING YOUR GENERATOR 52
THE IMPORTANCE OF MAINTENANCE 52
MAINTENANCE SAFETY 53
Safety Precautions 53
MAINTENANCE SCHEDULE 54
Tools 54
ENGINE OIL CHANGE 55
AIR CLEANER SERVICE 56
Foam Air Filter Cleaning 56
SPARK PLUG SERVICE 57
SPARK ARRESTER SERVICE 59
SEDIMENT CUP CLEANING 60

STORAGE 61
STORAGE PREPARATION 61
Cleaning 61

Fuel 61
Engine Oil 64
Engine Cylinder 64
STORAGE PRECAUTIONS 65
REMOVAL FROM STORAGE 65

TRANSPORTING 66

TAKING CARE OF UNEXPECTED PROBLEMS 67
ENGINE WILL NOT START 67
ENGINE LACKS POWER 68
NO POWER AT THE AC RECEPTACLES 68
ENGINE AUTOMATICALLY STOP AND THE CO ALARM INDICATOR FLASHING 69
ENGINE AUTOMATICALLY STOP AND THE FAULT/CO SENSOR LIFE INDICATOR FLASHING 69
FAULT/CO SENSOR LIFE INDICATOR FLASHING WHEN RUNNING THE ENGINE 69

TECHNICAL INFORMATION 70
SERIAL NUMBER LOCATION 70
CARBURETOR MODIFICATION FOR HIGH ALTITUDE OPERATION 71
EMISSION CONTROL SYSTEM INFORMATION 72
SPECIFICATIONS 75
WIRING DIAGRAM 77

CONSUMER INFORMATION 79
DEALER LOCATOR INFORMATION 79
Honda PUBLICATIONS 79
CUSTOMER SERVICE INFORMATION 80
Distributor's Limited Warranty 81
Emission Control System Warranty 86
REGISTRATION 91
Please Register Your Generator 91

INDEX 92

QUICK REFERENCE INFORMATION ....inside back cover

GENERATOR SAFETY

IMPORTANT SAFETY INFORMATION

Honda generators are designed for use with electrical equipment that has suitable power requirements. Other uses can result in injury to the operator or damage to the generator and other property.

Most injuries or property damage can be prevented if you follow all instructions in this manual and on the generator. The most common hazards are discussed below, along with the best way to protect yourself and others.

Operator Responsibility

- Never attempt to modify the generator. It can cause an accident as well as damage to the generator and appliances.
- Know how to stop the generator quickly in case of emergency.
- Understand the use of all generator controls, output receptacles, and connections.
- Be sure that anyone who operates the generator receives proper instruction.
- Protect children by keeping them at a safe distance from the generator.
- Obey all applicable laws and regulations where the generator is used.

Carbon Monoxide Hazards
A generator's exhaust contains toxic carbon monoxide, which you cannot see or smell. Breathing carbon monoxide can KILL YOU IN MINUTES. To avoid carbon monoxide poisoning, follow these instructions when operating a generator:

- Only run a generator OUTSIDE, far away from windows, doors, and vents with engine exhaust directed away from occupied structures.
- Never operate a generator inside a house, garage, basement, crawl space, any type of vehicle, trailer, or boat, or any enclosed or partly enclosed space.
- Never operate a generator near open doors, windows, vents, or hatches.
- Get fresh air and seek medical attention immediately if you suspect you have inhaled carbon monoxide.

Early symptoms of carbon monoxide exposure include headache, fatigue, shortness of breath, nausea, and dizziness. Continued exposure to carbon monoxide can cause loss of muscular coordination, loss of consciousness, and then death.

To alert you to potentially dangerous levels of carbon monoxide coming from a generator operating outside or from other sources, install battery operated carbon monoxide alarms or plug-in carbon monoxide alarms with battery back-up on every level of your home, outside sleeping areas, inside any type of vehicle, trailer, or boat in accordance with the alarm's instructions.

CO-MINDER:
This generator is equipped with a CO-MINDER system that automatically stops the engine before the surrounding carbon monoxide concentration exceeds a certain concentration.
- Do not modify the CO-MINDER.
- The CO-MINDER cannot prevent all danger associated with or caused by carbon monoxide. Pay careful attention to the location of the generator (see page 24).

GENERATOR SAFETY

Electric Shock Hazards

The generator produces enough electric power to cause a serious shock or electrocution if misused.

- Do not use in wet conditions. Keep the generator dry.
  - Do not use in the rain or snow.
  - Do not use near pool or a sprinkler system.
  - Do not use when your hands are wet.

- If the generator is stored outdoors, unprotected from the weather, check all of the electrical components on the control panel before each use. Moisture or ice can cause a malfunction or short circuit in electrical components that could result in electrocution.

- Do not connect to a building's electrical system unless an isolation switch has been installed by a qualified electrician.

Fire and Burn Hazards

- The exhaust system gets hot enough to ignite some materials.
  - Keep the generator at least 3 feet (1 meter) away from buildings and any type of vehicle, trailer, boat, or other equipment during operation.
  - Do not enclose the generator in any structure.
  - Keep flammable materials away from the generator.
  - Generators with standard equipment transport wheels must not be operated with the wheels and/or stands removed.
  - Do not block intake or exhaust vents, hoses, ports, or restrict air into or away from generator.
  - Do not add, remove, or modify covers, panels, cowlings, or straps.

- The muffler becomes very hot during operation and remains hot for a while after stopping the engine. Be careful not to touch the muffler while it is hot. Let the engine cool before storing the generator.

- Do not pour the water directly on the generator to put out the fire when it occurs. Use an appropriate fire extinguisher specially designed for electric fire or oil fire.

Refuel With Care

Gasoline is highly flammable, and gasoline vapor can explode.

- Do not refuel during operation.
- Allow the engine to cool if it has been in operation.
- Refuel only outdoors in a well-ventilated area and on a level surface.
- Never smoke near gasoline, and keep other flames and sparks away.
- Do not overfill the fuel tank.
- Make sure that any spilled fuel has been wiped up and cleaned before starting the engine.
- Always store gasoline in an approved container.

Vehicles and Transportation Hazards

- Do not operate the generator while it is being transported or while it is mounted to any type vehicle, trailer, or boat.
- Do not operate the generator when it is in a storage, cargo, or security enclosure, including any RV generator bay.
- Always completely remove the generator from the vehicle, RV, truck, trailer, boat, other equipment or structure during operation.
- The generator must remain stationary while in operation.

SAFETY LABEL LOCATIONS

These labels warn you of potential hazards that can cause serious injury. Read them carefully.
If a label comes off or becomes hard to read, contact your Honda generator dealer for a replacement.

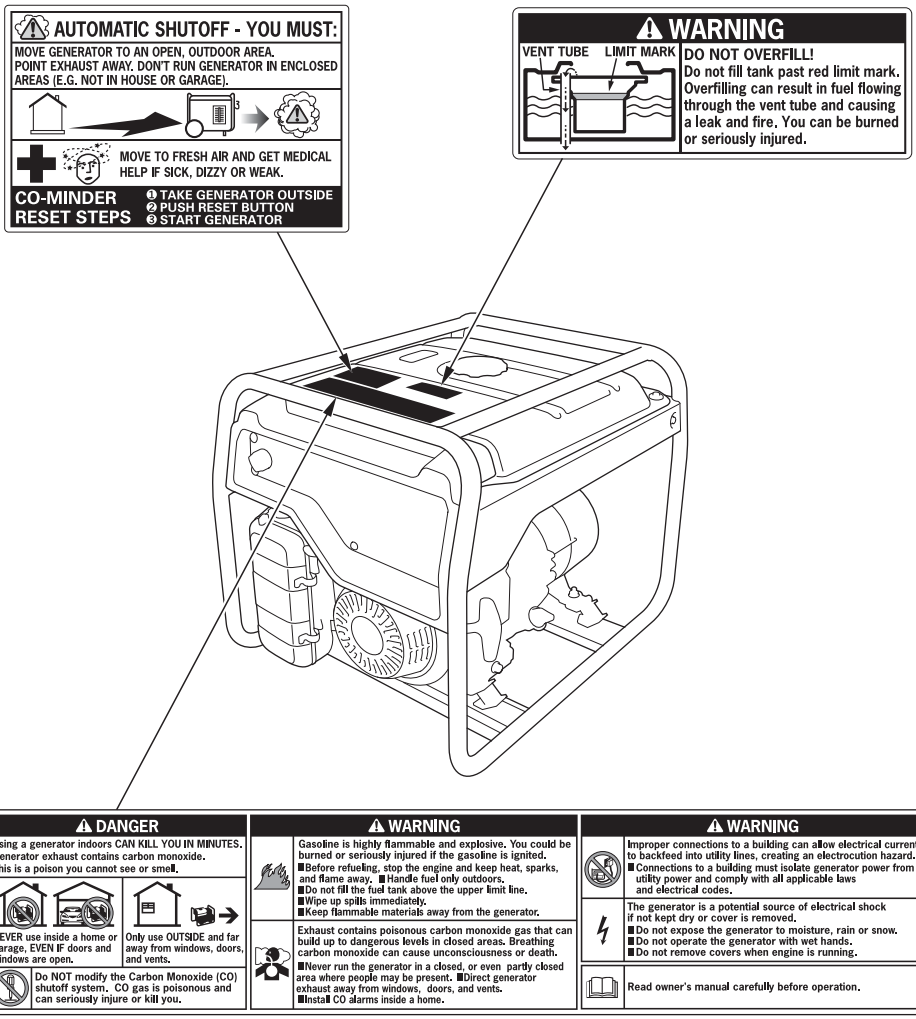

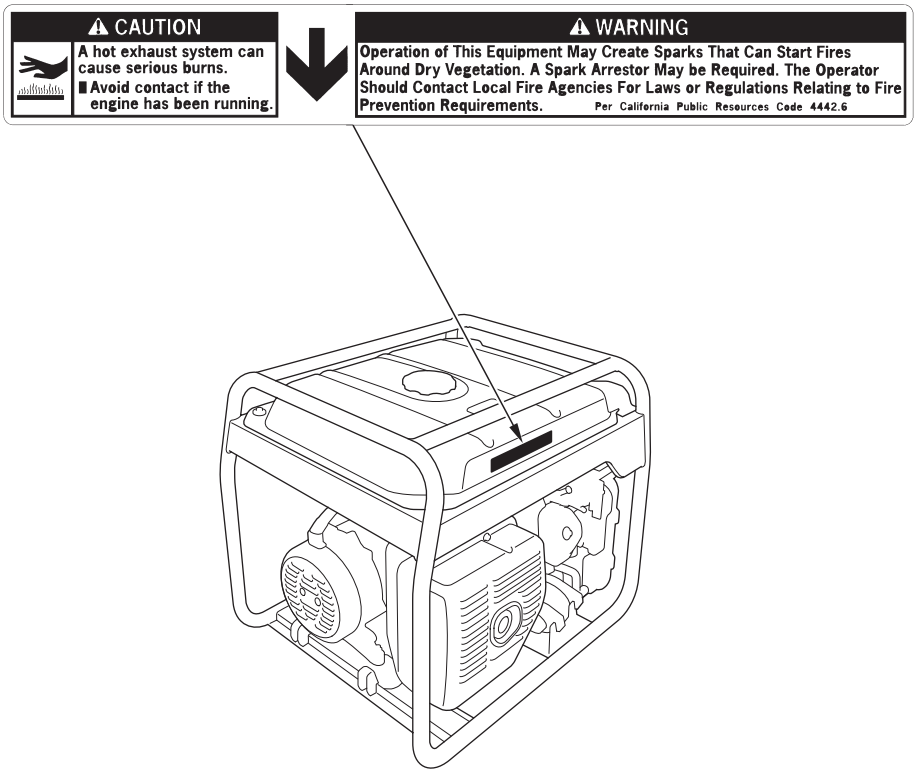
⚠ CAUTION
A hot exhaust system can cause serious burns.
Avoid contact if the engine has been running.
⚠ WARNING
Operation of This Equipment May Create Sparks That Can Start Fires Around Dry Vegetation. A Spark Arrestor May be Required. The Operator Should Contact Local Fire Agencies For Laws or Regulations Relating to Fire Prevention Requirements. Per California Public Resources Code 4442.6

ASSEMBLY

SAFETY

The Importance of Proper Assembly

Proper assembly is essential to operator safety and the reliability of the machine.

⚠ WARNING

Improper assembly can cause an unsafe condition.

Failure to properly follow assembly procedures can lead to serious injury or death.

Follow the procedures and precautions in this owner's manual carefully.

We cannot warn you of every conceivable hazard that can arise in performing this assembly. Only you can decide whether or not you should perform a given task.

ASSEMBLY

Handle Installation (Optional Parts)

Install the right and left handles on the generator upper frame using the handle brackets and four flange bolts.

Torque: 19.5 lbf·ft (26.5 N·m, 2.7 kgf·m)

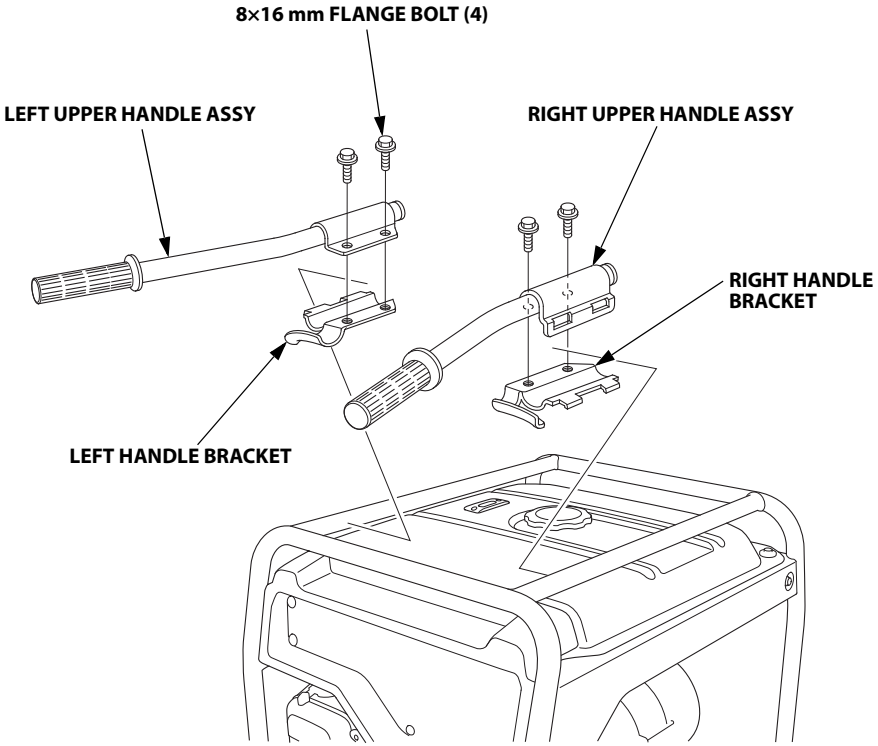

Wheel Kit Installation (Optional Parts)

1. Install the two stands on the under frame using four 8×16 mm flange bolts.

2. Install the two wheels on the axle shaft using the plain washers and split pins. After installing the split pins, bend the pins to ensure that the wheels are secured to the axle.

3. Install the axle assembly on the generator using four 8×16 mm flange bolts and 8 mm flange nuts.

   Torque: 19.5 lbf·ft (26.5 N·m, 2.7 kgf·m)

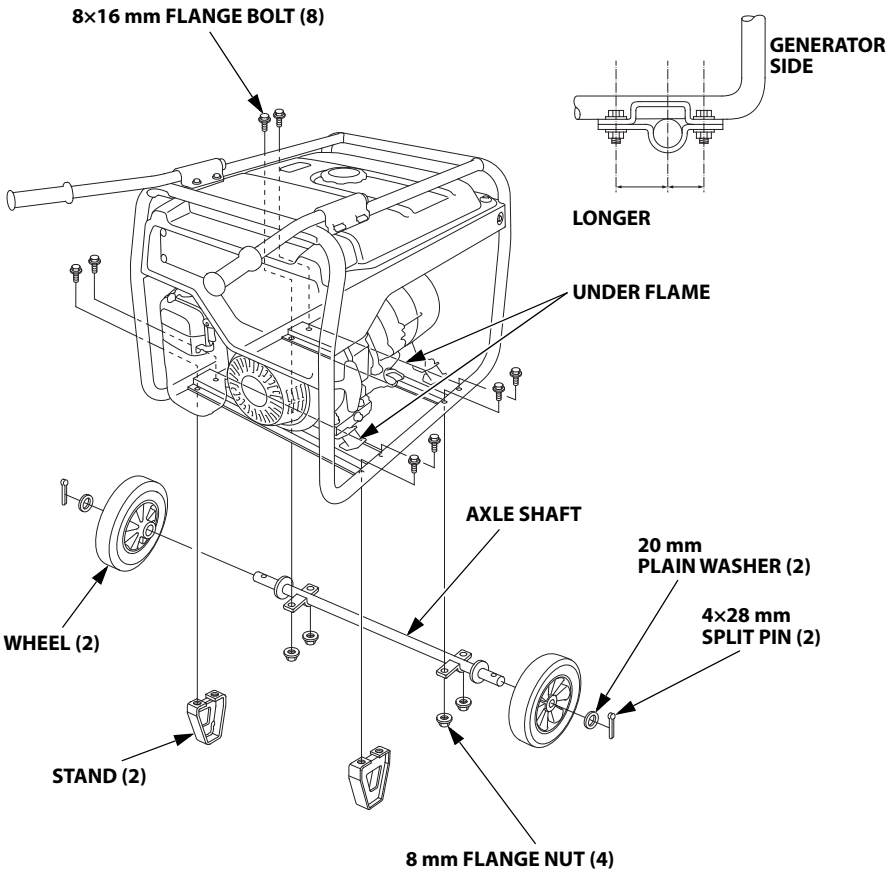

INITIAL USE INSTRUCTIONS

ENGINE OIL

The generator is shipped **WITHOUT OIL** in the engine.

1. Place the generator on a level surface.

2. Remove the oil filler cap by turning it counterclockwise.

3. Add enough oil to bring the oil level to the upper limit of the oil filler neck. SAE 10W-30 API service category SJ or later (or equivalent) is recommended for general use; for additional recommendations (see page 16).

   Maximum oil capacity: 1.2 US qt (1.1 L)

   Do not overfill the engine with oil. If the engine is overfilled, the excess oil may be transferred to the air cleaner housing and air filter.

4. Reinstall the oil filler cap securely.

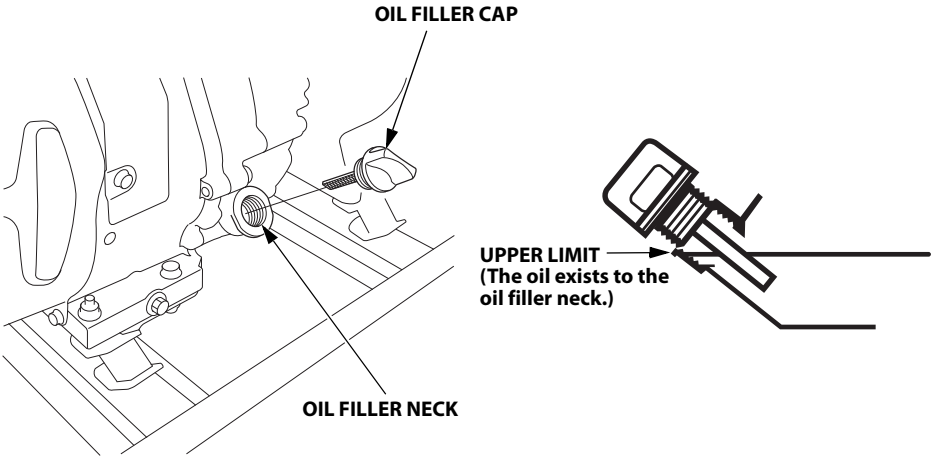

INITIAL USE INSTRUCTIONS

ENGINE OIL RECOMMENDATIONS

Oil is a major factor affecting performance and service life. Use 4-stroke automotive detergent oil.

SAE 10W–30 is recommended for general use. Other viscosities shown in the chart may be used when the average temperature in your area is within the recommended range.

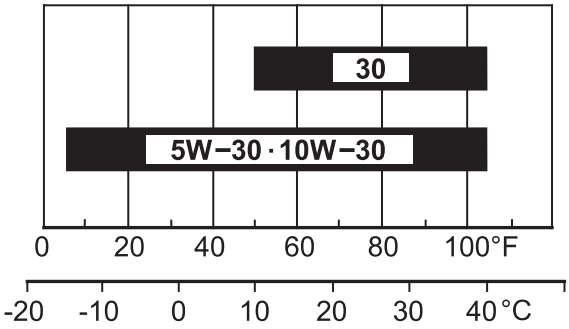

AMBIENT TEMPERATURE

Read the instructions on the oil container before use.

The SAE oil viscosity and service category are in the API label on the oil container. Honda recommends that you use API service category SJ or later (or equivalent) oil.

FUEL

Add fuel to the generator in a well-ventilated area. Fuel only outdoors. Keep gasoline away from appliance, such as pilot lights, barbecues, electric appliances, power tools, etc. Spilled fuel is not only a fire hazard, it causes environmental damage. Fuel carefully to avoid spilling fuel. Wipe up spills immediately. Do not fill the fuel tank above the upper level mark (red) on the fuel strainer. After fueling, reinstall the fuel tank cap securely.

When appropriate, with the engine stopped, check the fuel gauge for the fuel level. If the fuel level is low, wait for the generator to cool off and refill the fuel tank.

This engine is certified to operate on unleaded gasoline with a pump octane rating 86 or higher. Refer to "FUEL RECOMMENDATIONS" (see page 19) for additional fuel recommendations.

⚠ WARNING

Gasoline is highly flammable and explosive.

You can be burned or seriously injured when handling fuel.

- Stop the engine and let it cool before handling fuel.
- Keep heat, sparks, and flame away.
- Handle fuel only outdoors.
- Keep away from your vehicle.
- Wipe up spills immediately.

NOTICE

Fuel can damage paint and plastic. Be careful not to spill fuel when filling your fuel tank. Damage caused by spilled fuel is not covered under the Distributor's Limited Warranty.

INITIAL USE INSTRUCTIONS

1. Remove the fuel tank cap.

2. Fuel carefully to avoid spilling fuel. Do not fill the fuel tank above the upper level mark (red) on the fuel strainer.

3. After refueling, reinstall the fuel tank cap securely.

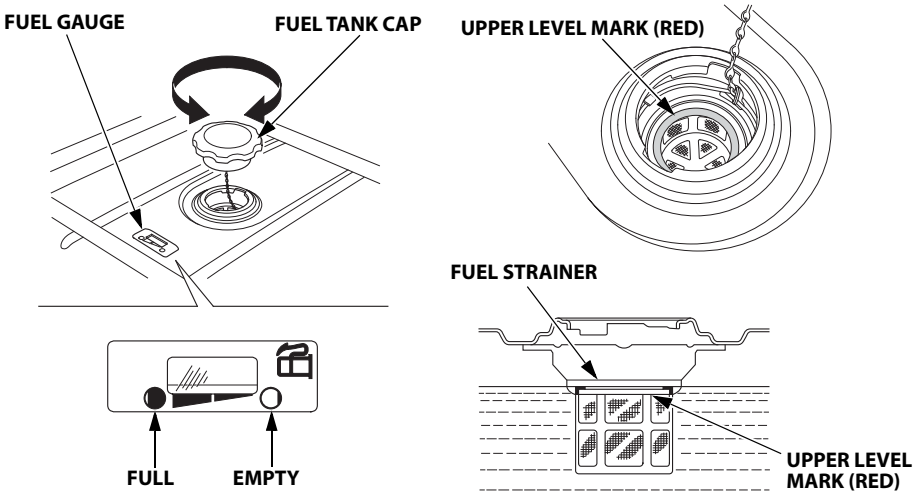

NOTICE

Fuel can damage paint and plastic. Be careful not to spill fuel when filling your fuel tank. Damage caused by spilled fuel is not covered under the Distributor's Limited Warranty.

Move the generator at least 10 feet (3 meters) away from the fueling source and site before starting the engine.

FUEL RECOMMENDATIONS

This engine is certified to operate on regular unleaded gasoline with a pump octane rating of 86 or higher.

Never use gasoline that is stale, contaminated, or mixed with oil. Avoid getting dirt or water in the fuel tank.

You may use regular unleaded gasoline containing no more than 10% ethanol (E10) or 5% methanol by volume. In addition, methanol must contain cosolvents and corrosion inhibitors.

Use of fuels with content of ethanol or methanol greater than shown above may cause starting and/or performance problems. It may also damage metal, rubber, and plastic parts of the fuel system.

Engine damage or performance problems that result from using a fuel with percentages of ethanol or methanol greater than shown above and leaded gasoline are not covered under the Distributor Limited Warranty.

If your equipment will be used on an infrequent basis, refer to the fuel section of "STORAGE" chapter (see page 61) for additional information regarding fuel deterioration.

CONTROLS & FEATURES

COMPONENT & CONTROL LOCATIONS

Use the illustrations on these pages to locate and identify the most frequently used controls.

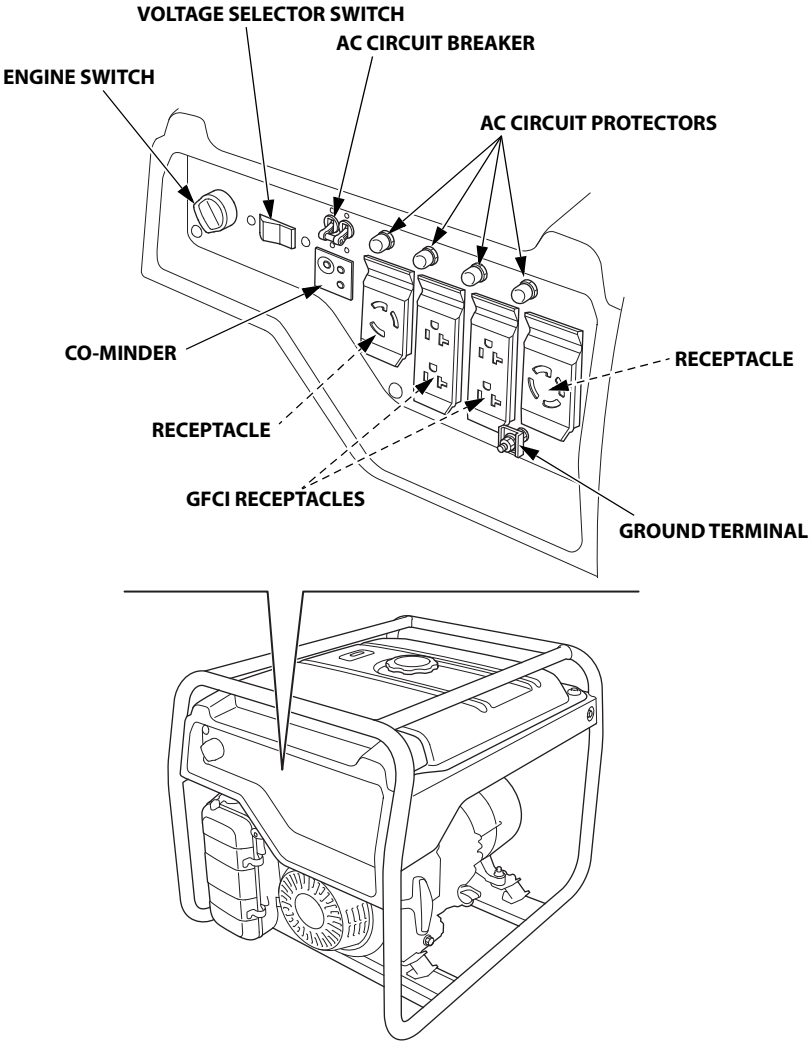

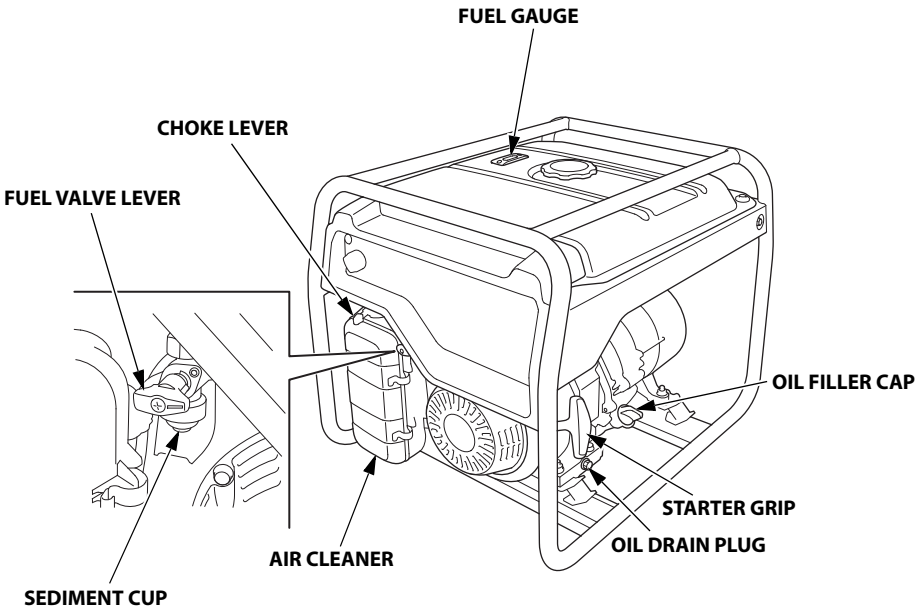
FUEL GAUGE
CHOKE LEVER
FUEL VALVE LEVER
OIL FILLER CAP
STARTER GRIP
OIL DRAIN PLUG
AIR CLEANER
SEDIMENT CUP

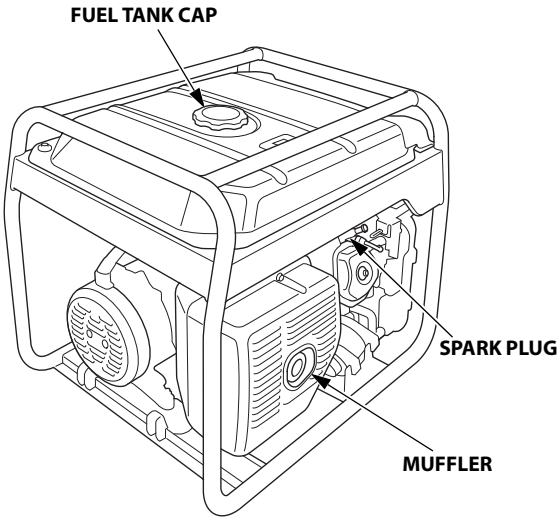
FUEL TANK CAP
SPARK PLUG
MUFFLER

CONTROLS

Engine Switch

The engine switch controls the ignition system.

OFF – Stops the engine.

ON – Running position, and for starting.

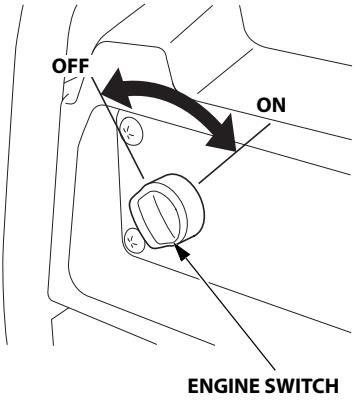

Starter Grip

Pulling the starter grip operates the recoil starter to crank the engine.

NOTICE

- *Do not allow the starter grip to snap back against the generator. Return it gently to prevent damage to the starter.*
- *Do not let the starter rope rub against the generator body, or the rope will wear out prematurely.*

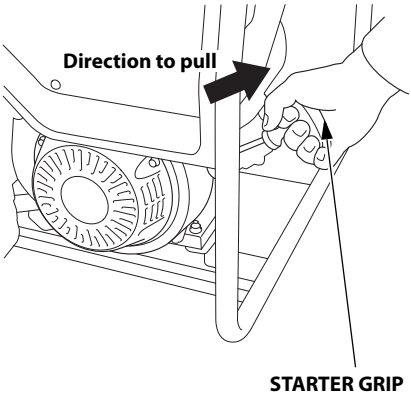

Fuel Valve Lever

The fuel valve lever is located between the fuel tank and carburetor.

The fuel valve lever must be in the ON position for the engine to run.

After stopping the engine, turn the fuel valve lever to the OFF position.

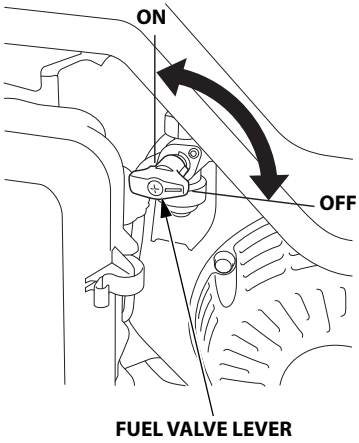

Choke Lever

The choke is used to provide proper starting mixture when the engine is cold. It can be opened and closed by operating the choke lever manually. Move the choke lever to the CLOSED position to enrich the mixture for cold starting.

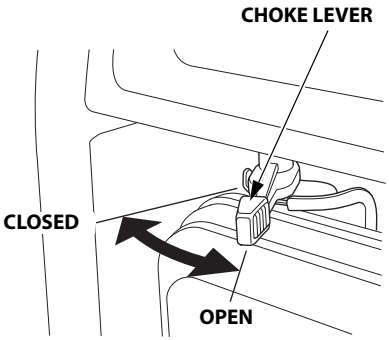

CO-MINDER (CO Shut-off System)
CO-MINDER is a system that automatically stops the engine before the surrounding carbon monoxide concentration exceeds a certain level.
If the CO-MINDER detects a high carbon monoxide concentration, the engine will stop and the CO ALARM indicator will flash for about five minutes.

Continuously using the generator in areas with high concentrations of carbon monoxide can cause serious health hazards due to carbon monoxide poisoning (see page 7). If you are in the same area as the generator, evacuate the area immediately. Get fresh air and seek medical attention immediately if you feel sick or suspect you have inhaled carbon monoxide. Ventilate the area or space where the generator is located.

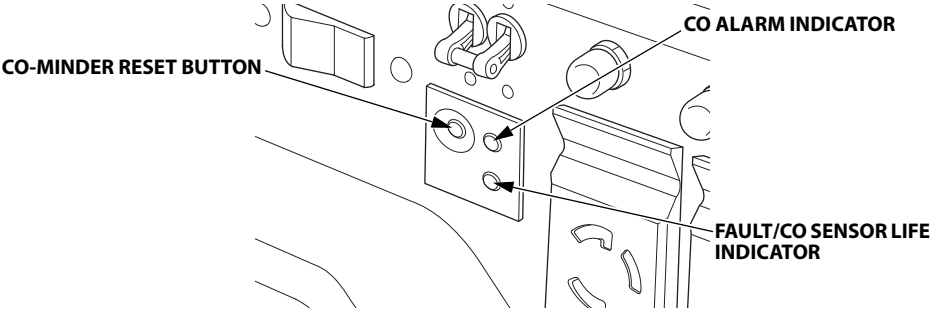

If the engine is stopped by the CO-MINDER system, change the operating location of the generator.

- Do not operate the generator in an enclosed or partly enclosed area such as a garage.
- Do not enclose or cover the generator with boards or a tent, even when it is outside and away from of a building.
- Place the generator so that the muffler is pointed in the same direction as the wind is blowing and the exhaust is directed away from buildings, other structures, or vehicles.
- Avoid placing the generator near devices that emit carbon monoxide, such as another generator.

RESTARTING THE ENGINE

When the engine is stopped automatically by CO-MINDER, press the CO-MINDER reset button to restart the engine.

If the engine is restarted without pressing the CO-MINDER reset button, the engine will automatically stop immediately after restarting and the CO ALARM indicator will flash for approximately five minutes.

Resetting the CO-MINDER is possible only after the CO ALARM indicator is turned off.

CO-MINDER MALFUNCTION DETECTION

If the CO-MINDER detects a system malfunction, the engine will stop automatically and the FAULT/CO SENSOR LIFE indicator will flash for approximately five minutes. Press the CO-MINDER reset button to turn off the FAULT/CO SENSOR LIFE indicator. If the engine will not remain running after attempting to restart it and the FAULT/CO SENSOR LIFE indicator comes on again, there may be a system malfunction. If this occurs, do not attempt to restart the generator more than two times. If the CO-MINDER system is malfunctioning, it cannot warn you of potential high concentrations of carbon monoxide. Move the generator to a well-ventilated location and consult an authorized Honda Power Equipment dealer.

CO SENSOR LIFE

If the FAULT/CO SENSOR LIFE indicator flashes when operating the generator, the CO-MINDER may be reaching the end of its useful lifespan and will eventually need replacement.

- If the indicator flashes once every four seconds, this means there is approximately six months to one year of life left in the CO-MINDER.
- If the indicator flashes once every two seconds, this means there is approximately six months of life or less left in the CO-MINDER.

NOTICE

- *The FAULT/CO SENSOR LIFE indicator indicates the estimated life left in the CO-MINDER.*
- *The generator stopping period and storage period are also included in the useful lifespan of the CO-MINDER.*
- *Contact an authorized Honda Power Equipment dealer for CO-MINDER replacement.*

Voltage Selector Switch

The voltage selector switch switches generator output to produce "120V ONLY" or "120V/240V." If a 240V appliance is connected to the 4-prong receptacle, the switch must be in the "120V/240V" position. If only a 120V appliance is being connected to any of the 120V 3-prong receptacles, select the "120V ONLY" position.

Select the voltage before starting the engine.

SWITCH POSITION

- 120V/240V: The 120V and 120V/240V receptacles can be used simultaneously.
- 120V ONLY: ONLY the 120V receptacles can be used.
  Do not use the 120V/240V receptacle in this position. The most power will be available at the 30A 120V locking plug receptacle.

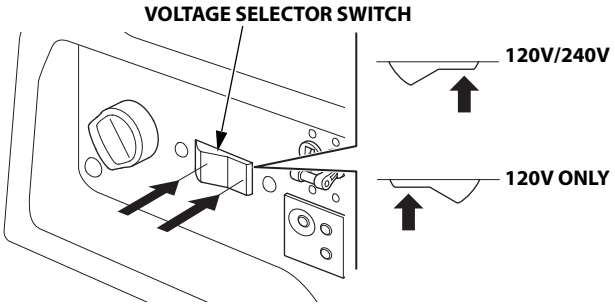

AC Circuit Breaker

The AC circuit breaker will automatically switch OFF if there is a short circuit or a significant overload at the receptacles.

The AC circuit breaker may be used to switch the generator power ON or OFF.

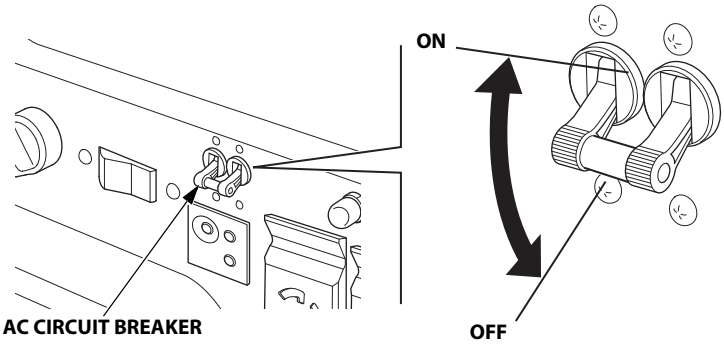

AC Circuit Protectors

The AC circuit protectors will automatically switch OFF if there is a short circuit or a significant overload of the generator at each receptacle. If an AC circuit protector switches OFF automatically, check that the appliance is working properly and does not exceed the rated load capacity of the circuit before resetting the AC circuit protector ON.

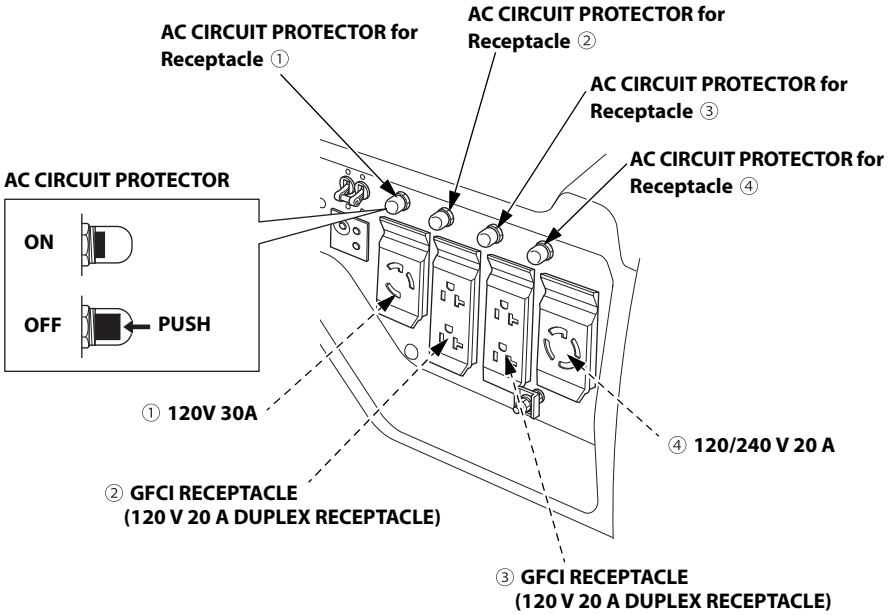

Ground Fault Circuit Interrupter (GFCI) Receptacle
Each 120 V 20 A duplex receptacle is protected by a Ground Fault Circuit Interrupter (GFCI) for protection against the shock hazard of ground-fault currents.

An example of ground-fault current is the current that would flow through a person who is using an appliance with faulty insulation and, at the same time, is in contact with an electrical ground such as a plumbing fixture, wet floor, or earth. The GFCI will protect against current flowing through that person.

The GFCI will not protect against short circuit or overloads.

GFCIs can be expected to interrupt power supply if there are ground faults or stray current imposed on the wiring by other electrical devices, wiring, or equipment. Due to the risk of a power interruption, this generator is not recommended for powering medical or life support equipment.

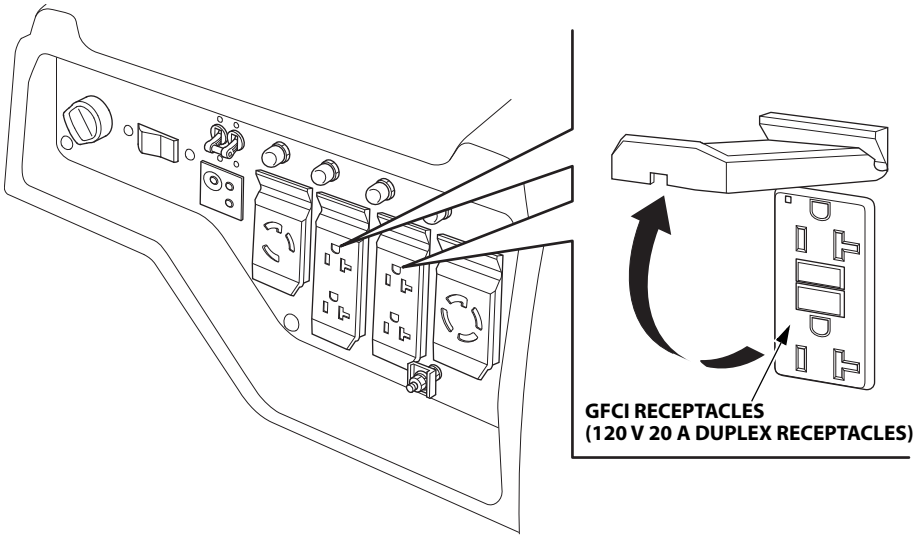

FEATURES

Oil Alert® System

The Oil Alert system is designed to prevent engine damage caused by an insufficient amount of oil in the crankcase. Before the oil level in the crankcase can fall below a safe limit, the Oil Alert system will automatically stop the engine (the engine switch will remain in the ON position).

If the engine stops and will not restart, check the engine oil level (see page 33) before troubleshooting in other areas.

Automatic Engine Stop Function

OIL ALERT FUNCTION
During operation, the engine will automatically stop if there is not enough oil in the tank. Moreover, if the generator is on a slope, the oil alert function may operate and stop the engine.

OVERSPEED DETECTION FUNCTION
To protect the engine from exceeding the engine load, the engine will automatically stop if the engine speed becomes abnormal.

ABNORMAL VOLTAGE DETECTION FUNCTION
The engine will automatically stop during generation when it detects abnormal voltage.

If the engine stops, make sure the oil level is correct. Wait a few minutes, and then try to restart the engine. If the engine still won't start, take the generator to your authorized servicing Honda Power Equipment dealer.

Fuel Gauge

The fuel gauge is a mechanical device that measures the fuel level in the tank. The red indicator in the window will reference the level in relation to full or empty. To provide increased operating time, start with a full tank before beginning operation. Check the fuel level with the generator on a level surface. Always refuel with the engine OFF and cool.

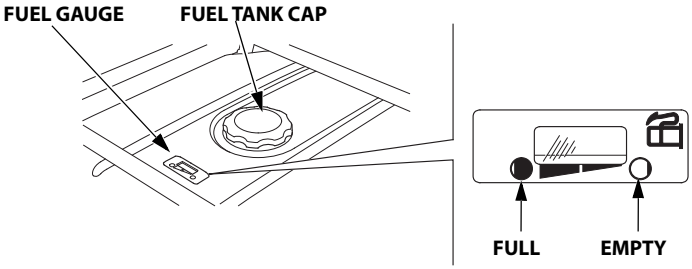

Ground Terminal

The generator ground terminal is connected to the frame of the generator, the metal non-current-carrying parts of the generator, and the ground terminals of each receptacle.

Before using the ground terminal, consult a qualified electrician, electrical inspector, or local agency having jurisdiction for local codes or ordinances that apply to the intended use of the generator.

NEUTRAL FLOATING:

- The generator (stator winding) is isolated from the frame and from the AC receptacle ground pin.
- Electrical devices that require a grounded receptacle pin connection will not function if the receptacle ground pin is not functional.

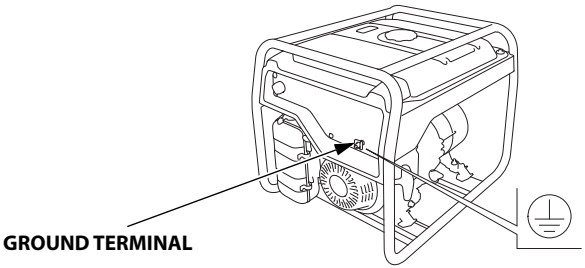

BEFORE OPERATION

ARE YOU READY TO GET STARTED?

Your safety is your responsibility. A little time spent in preparation will significantly reduce your risk of injury.

Knowledge
Read and understand this manual. Know what the controls do and how to operate them.

Familiarize yourself with the generator and its operation before you begin using it. Know how to quickly shut off the generator in case of an emergency.

If the generator is being used to power appliances, be sure that they do not exceed the generator's load rating (see page 47).

IS YOUR GENERATOR READY TO GO?

For your safety, to ensure compliance with environmental regulations, and to maximize the service life of your equipment, it is very important to take a few moments before you operate the generator to check its condition. Be sure to take care of any problem you find, or have your servicing dealer correct it, before you operate the generator.

⚠ WARNING

Failure to properly maintain this generator, or failing to correct a problem before operation, could result in a significant malfunction.

Some malfunctions can cause serious injuries or death.

Always perform a pre-operation inspection before each operation and correct any problems.

BEFORE OPERATION

To prevent a possible fire, keep the generator at least 3 feet (1 meter) away from building walls, vehicles, and other equipment during operation. Do not place flammable objects close to the engine or exhaust.

Before beginning your pre-operation checks, be sure the generator is on a level surface and the engine switch is in the OFF position.

Check the Engine

- Before each use, look around and underneath the engine for signs of oil or gasoline leaks.
- Check the engine oil level (see page 33). A low engine oil level will cause the Oil Alert system to shut down the engine.
- Check the air filters (see page 34). Dirty air filters will restrict air flow to the fuel system, reducing engine and generator performance.
- Check the fuel level (see page 17). Starting with a full tank will help to eliminate or reduce operating interruptions for refueling.

Check the GFCI

Check the GFCI operation (see page 42) after starting the engine.

AC Appliance and Power Cord

Before connecting an AC appliance or power cord to the generator:

- Use grounded 3-prong extension cords, tools, and appliances, or double-insulated tools and appliances.
- Inspect cords and plugs, and replace if damaged.
- Do not use cord lengths greater than 164 feet (50 meters), and do not use multiple tools and appliances with built-in noise filters. Such use may activate the GFCI and interrupt power supply.
- Make sure that the appliance is in good working order. Faulty appliances or power cords can create a potential for electric shock.
- Make sure the electrical rating of the tool or appliance does not exceed the rated power of the generator or the receptacle being used.
- Do not exceed the current limit specified for any one receptacle.

ENGINE OIL LEVEL CHECK

Check the engine oil level with the engine stopped and in a level position.

1. Remove the oil filler cap by turning it counterclockwise. Wipe the dipstick clean.

2. Insert the dipstick into the oil filler neck as shown, but do not screw it in, then remove it to check the oil level.

3. If the oil level is near or below the lower limit, fill with the recommended oil to the upper limit. Do not overfill.
   - "Upper limit" means the oil exists to the oil filler neck.
   - "Lower limit" means the oil is attached only to the lower end of the dipstick.

   Refer to "ENGINE OIL RECOMMENDATIONS" in page 16.

4. Reinstall the oil filler cap securely.

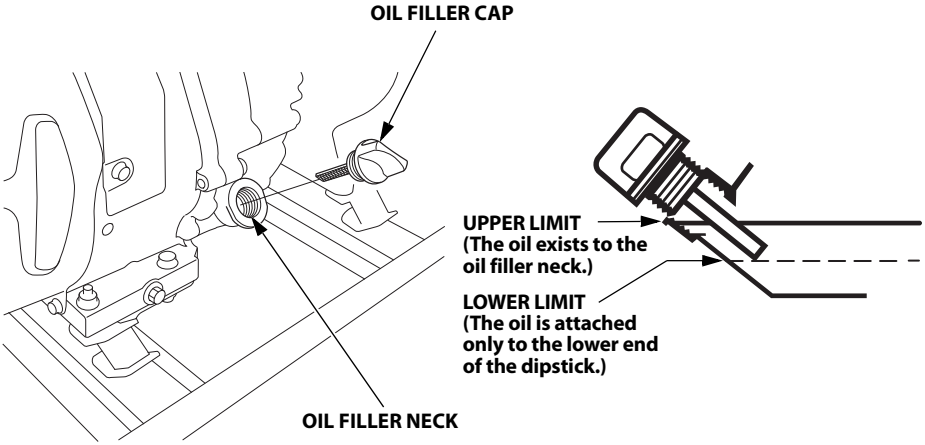

The Oil Alert system will automatically stop the engine before the oil level falls below safe limits. However, to avoid the inconvenience of an unexpected shutdown, check the oil level regularly.

AIR FILTER CHECK

1. Unsnap the air cleaner cover clips and open the air cleaner cover.
2. Free the hooks from the setting pins on the air cleaner case and remove the air cleaner cover to the right side of the frame pipe, taking care not to damage the air cleaner cover.
3. Remove the air cleaner element from the air cleaner case.
4. Check the air cleaner element to be sure it is clean and in good condition. If the air cleaner element is dirty, clean it as described on page 56. Replace the air cleaner element if it is damaged.

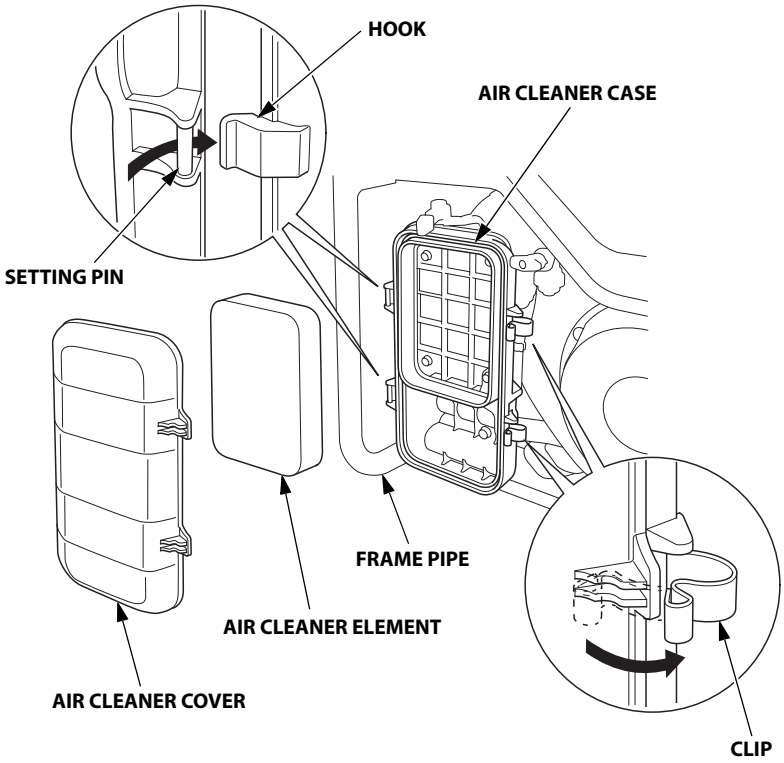

5. Reinstall the air cleaner element in the air cleaner case.

6. Set the hooks of the air cleaner cover to the setting pins securely, and then push the air cleaner cover to lock the clips.
   Be sure that the cover is set securely. There must be no clearance between the air cleaner cover and air cleaner case.

NOTICE

Operating the engine without the air filters, or with a damaged air filters, will allow dirt to enter the engine, causing rapid engine wear. This type of damage is not covered by the Distributor's Limited Warranty.

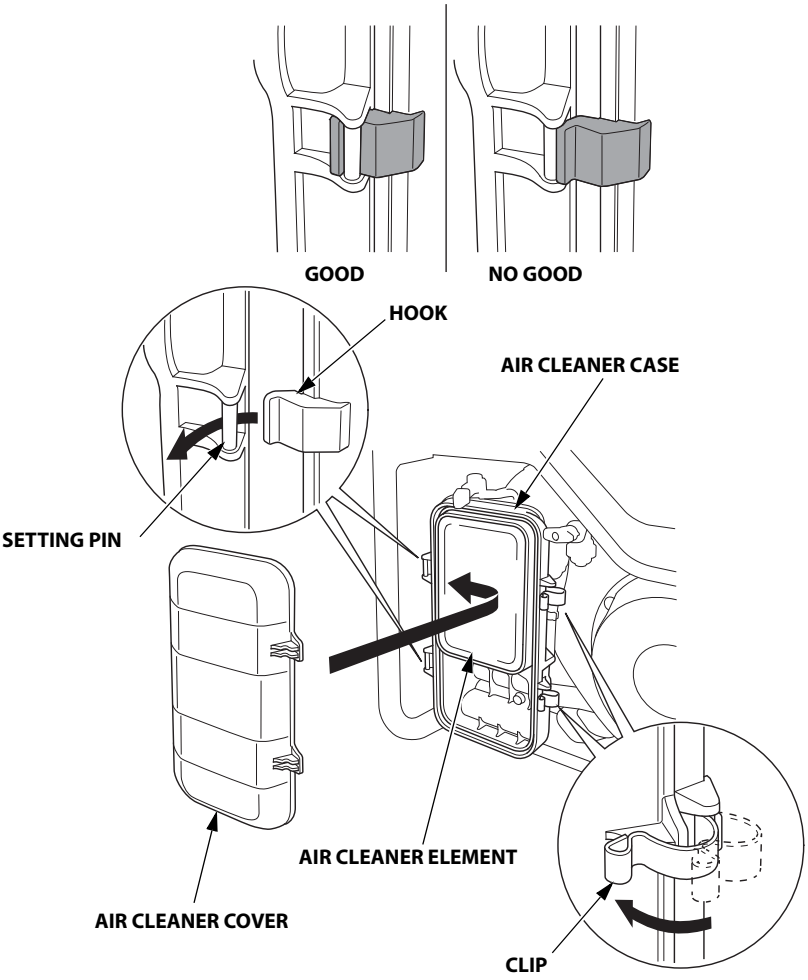

SAFE OPERATING PRECAUTIONS

Before operating the generator, review chapters "GENERATOR SAFETY" (see page 6).

For your safety, do not operate the generator in an enclosed, or partly enclosed area such as a garage (even if the door is open) or near structures or vehicles. Your generator's exhaust contains poisonous carbon monoxide gas that can collect rapidly in such areas, structures, vehicles, trailers, or boats.

- Do not operate the generator when it is in a storage, cargo, or security enclosure, including any RV generator bay.
- Always completely remove the generator from the vehicle, trailer, boat or other equipment or structure during operation.
- The generator must remain stationary while in operation.

⚠ WARNING

Exhaust contains poisonous carbon monoxide gas that can build up to dangerous levels in enclosed or partly enclosed areas.

Breathing carbon monoxide can cause unconsciousness or death.

Never run this product's engine in an enclosed, or even partly enclosed area.

OPERATION

STARTING THE ENGINE

To prevent a possible fire, keep the generator at least 3 feet (1 meter) away from building or trailer walls, vehicles, trailers, boats, and other equipment during operation. Do not place flammable objects close to the engine.

NOTICE

- *Operating this generator less than 3 feet (1 meter) from a building, obstruction, or when it is in an enclosure, a storage or security compartment/bay, can cause overheating and damage the generator.*
- *For proper cooling, allow at least 3 feet (1 meter) of empty space above and around the generator.*
- *Since the CO-MINDER may detect the carbon monoxide concentration and the engine may stop automatically, pay attention to the direction of exhaust and where the generator is located (see page 24).*

Refer to "SAFE OPERATING PRECAUTIONS" on page 36 and perform the "IS YOUR GENERATOR READY TO GO?" checks (see page 31).

Refer to "AC OPERATION" (see page 45) for connecting loads to the generator.

1. Make sure that all appliances are disconnected from the AC receptacle.

2. Make sure that the AC circuit breaker is in the OFF position.

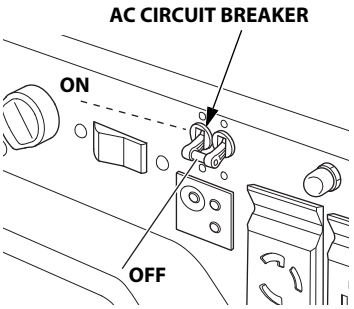

3. Turn the fuel valve lever to the ON position.

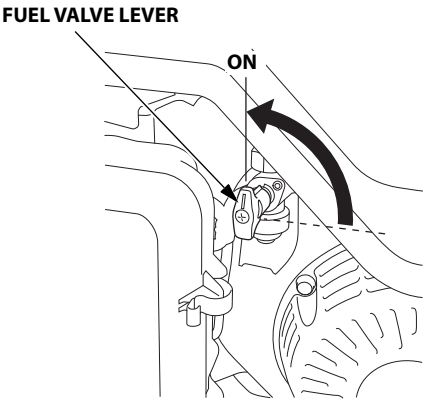

4. To start a cold engine, move the choke lever to the CLOSED position. To restart a warm engine, leave the choke lever in the OPEN position.

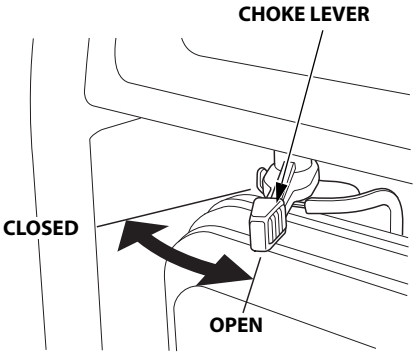

5. Turn the engine switch to the ON position.

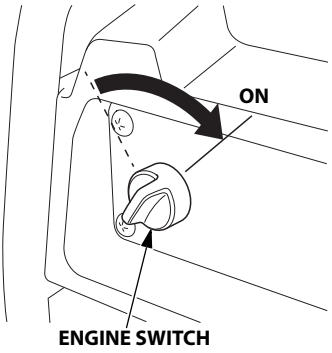

6. Pull the starter grip lightly until you feel resistance; then pull briskly in the direction of the arrow as shown.

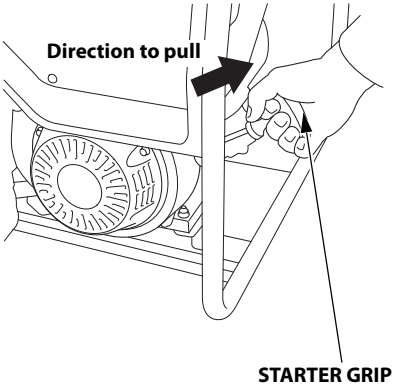

NOTICE

- *Do not allow the starter grip to snap back against the engine. Return it gently to prevent damage to the starter.*
- *Do not let the starter rope rub against the generator body, or the rope will wear out prematurely.*

7. If the choke lever was moved to the CLOSED position to start the engine, gradually move it to the OPEN position as the engine warms up.

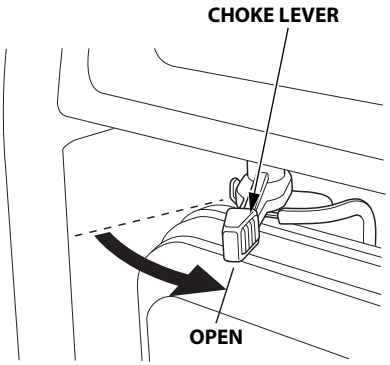

STOPPING THE ENGINE

To stop the engine in an emergency, simply turn the engine switch to the OFF position. Under normal conditions, use the following procedure.

1. Turn off or disconnect all appliances that are connected to the generator.

2. Move the AC circuit breaker to the OFF position.

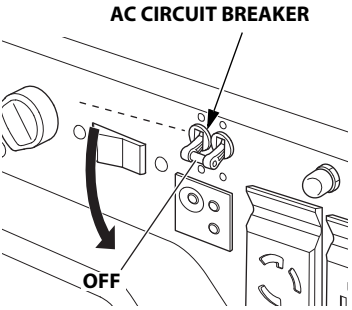

3. Turn the engine switch to the OFF position.

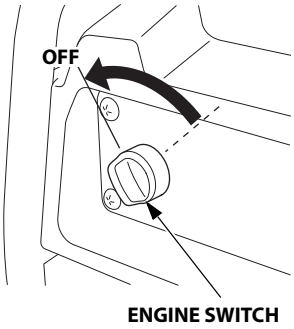

4. Turn the fuel valve lever to the OFF position.

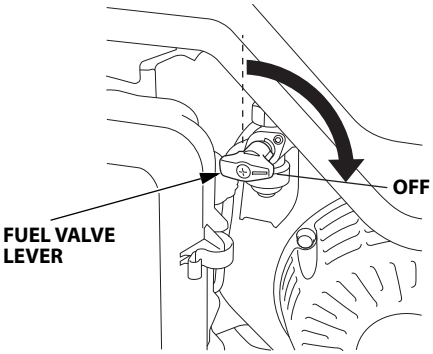

HOW TO RESTART WHEN STOPPED BY CO-MINDER (CO SHUT-OFF SYSTEM)

When the engine is automatically stopped by the CO-MINDER, move the generator to an area with fresh air and away from any device that may be emitting carbon monoxide, such as another generator. Press the CO-MINDER reset button and then follow the standard procedure for starting the engine. When the CO ALARM indicator or the FAULT/CO-MINDER LIFE indicator flashes, press the CO-MINDER reset button to turn off the indicator.

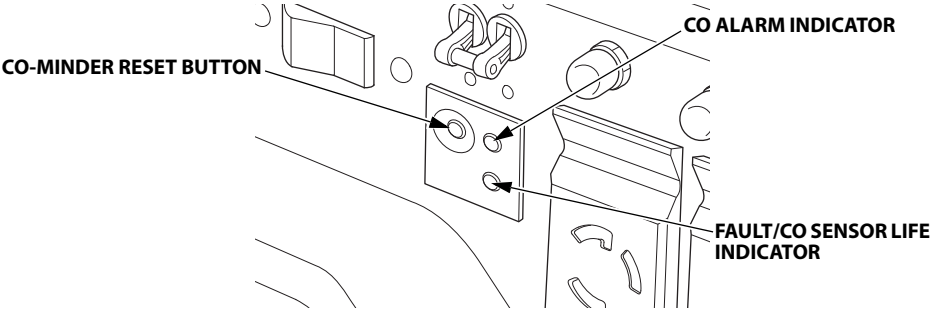

GFCI OPERATION CHECK

Always check GFCI operation before using the generator.

⚠ WARNING

A faulty GFCI system will not provide proper protection against electric shock as designed.

An electric shock can result in serious injury or death.

Always perform the GFCI system inspection before using the generator. If the GFCI system fails the test, the generator must be repaired by an authorized Honda servicing dealer before use.

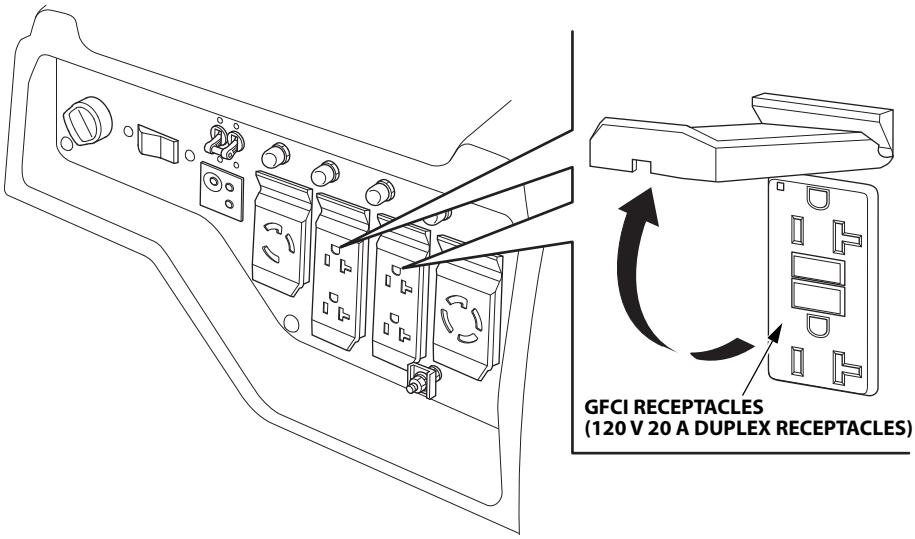

1. Unplug all tools and appliances from the generator.

2. Start the engine (see page 37).

3. Turn the AC circuit breaker to the ON position.
   When the GFCI is operating normally, the GFCI indicator will continuously light green.

   Light order:
   (red) Blink once → (green) Lights continuously

   - If the green GFCI indicator does not light on, press the GFCI RESET button.
   - If the red GFCI indicator starts to blink continuously, contact an authorized Honda Power Equipment dealer.

4. Press the GFCI TEST button:

   - The GFCI RESET button will pop out and the green GFCI indicator will go off.
   - If the GFCI does not function as described, contact an authorized Honda Power Equipment dealer.

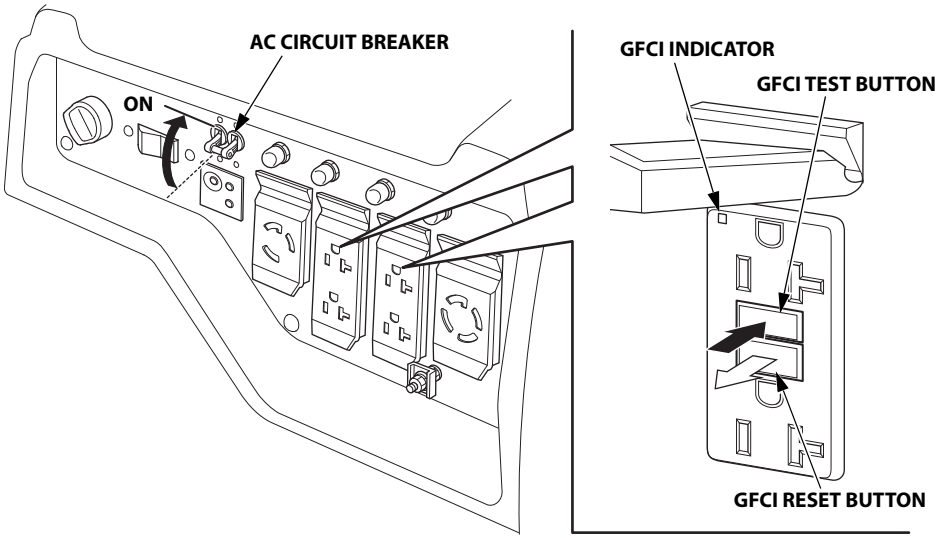

5. Press the GFCI RESET button:

- The green GFCI indicator will light continuously.
- If the red GFCI indicator starts to blink continuously, contact an authorized Honda Power Equipment dealer.

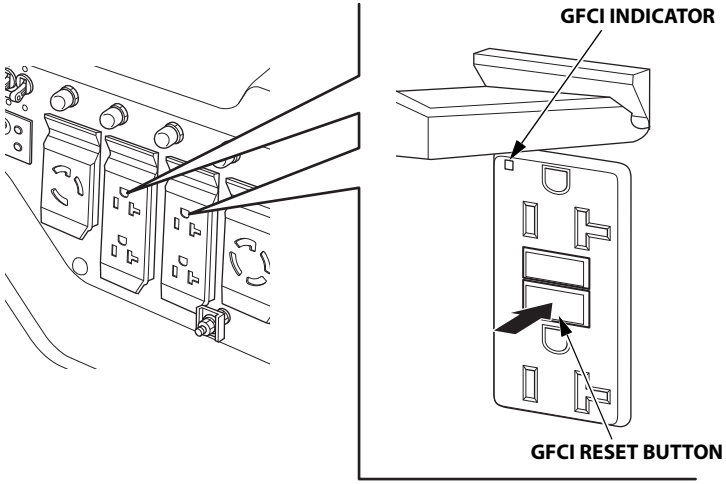

When the GFCI RESET button pops out or the green GFCI indicator does not lit during operation:

- Unplug all appliances from the GFCI protected receptacle.
- Press the GFCI RESET button.
  - If the GFCI cannot be reset, the GFCI is faulty. Contact an authorized Honda Power Equipment dealer.
  - If the GFCI RESET button extends, this usually indicates a faulty power tool, appliance, or cord. If that occurs, perform operation check steps 1 through 5 to verify that the GFCI is in proper working order. If the GFCI tests correctly, then the fault is likely to be in the power tool, appliance, or cord. Repair or replace the faulty power tool, appliance, or cord before further use.

AC OPERATION

If an appliance begins to operate abnormally, becomes sluggish, or stops suddenly, turn it off immediately. Disconnect the appliance, and determine whether the problem is in the appliance or the rated load capacity of the generator has been exceeded.

NOTICE

Substantial overloading may damage the generator. Marginal overloading may shorten the service life of the generator.

1. Turn the voltage selector switch to either position.
   With the voltage selector switch in the "120V/240V" position, you can use the 120V and 120V/240V receptacles simultaneously. If you are NOT using 240 volts, then select the "120V ONLY" position.

NOTICE

Disconnect or turn OFF all appliances or tools connected to the generator before changing the voltage selector switch position.
The generator may be damaged if the switch position is changed with loads connected and operating.

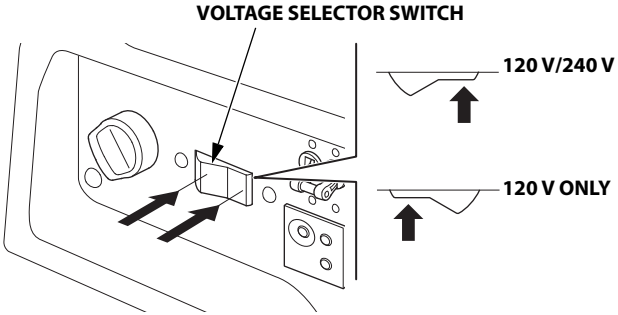

2. Start the engine (see page 37).

3. Switch ON the AC circuit breaker.

4. Plug in the appliance.
   Most motorized appliances require more than their rated wattage for startup.

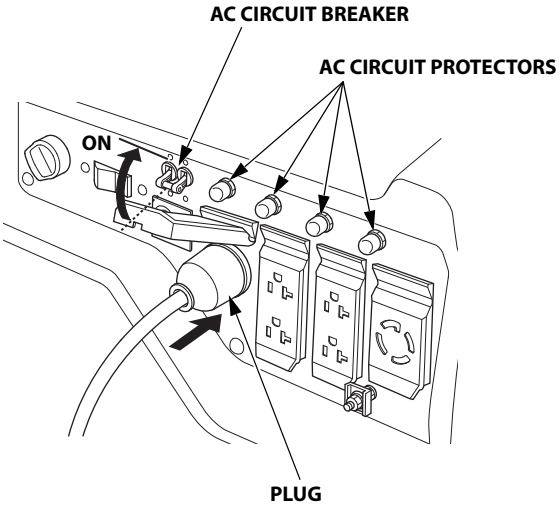

5. Turn on the appliance.

Do not exceed the current limit specified for any of the receptacles.
If an overloaded circuit causes the AC circuit breaker or AC circuit protector to switch OFF, reduce the electrical load on the circuit, wait a few minutes and then reset the AC circuit breaker or AC circuit protector.

AC Applications
Before connecting an appliance or power cord to the generator:

- Make sure that it is in good working order. A faulty appliance or power cord can create a potential for electrical shock.
- If an appliance begins to operate abnormally, becomes sluggish, or stops suddenly, turn it off immediately. Disconnect the appliance, and determine whether the problem is the appliance or the rated load capacity of the generator has been exceeded.

Most appliance motors require more than their rated wattage for startup. Make sure the electrical rating of the tool or appliance does not exceed the maximum power rating of the generator.

Maximum power is:

4.0 kVA

For continuous operation, do not exceed the rated power.
Rated power is:

3.6 kVA

In either case, the total power requirements (VA) of all appliances connected must be considered. Appliance and power tool manufacturers usually list rating information near the model number or serial number.

NOTICE
Substantial overloading will open the AC circuit breaker. Slightly overloading the generator may not switch the AC circuit breaker OFF, but will shorten the service life of the generator.

AC Receptacle Selection

The control panel, shown below, has a voltage selector switch and four receptacles. Receptacle 4, the 240-volt receptacle, has two powered terminals, 4A and 4B.

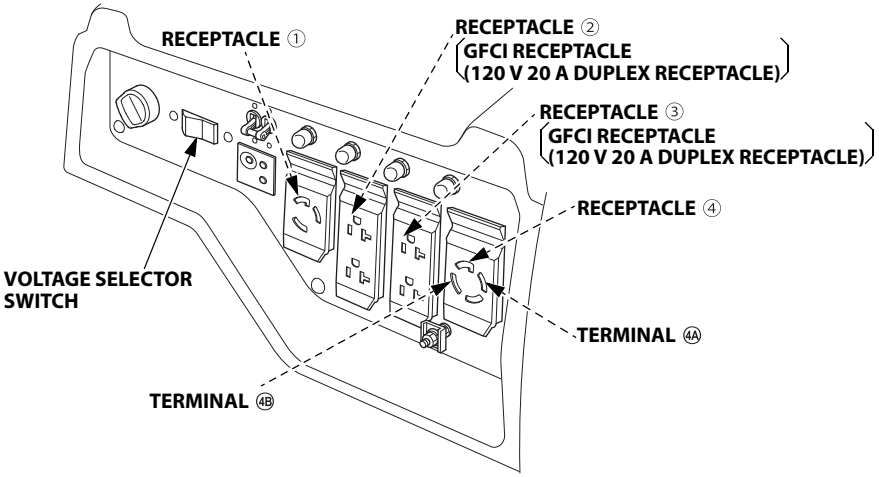

Power Producing Circuits

This generator is equipped with two power generating circuits.
When the voltage selector switch is in the 120V/240V position, each of the two power producing circuits supplies power to specific receptacles.
When the voltage selector switch is in the 120V ONLY position, the power producing circuits operate in parallel, sharing the total load connected to terminal 4A and receptacles 1, 2, and 3.

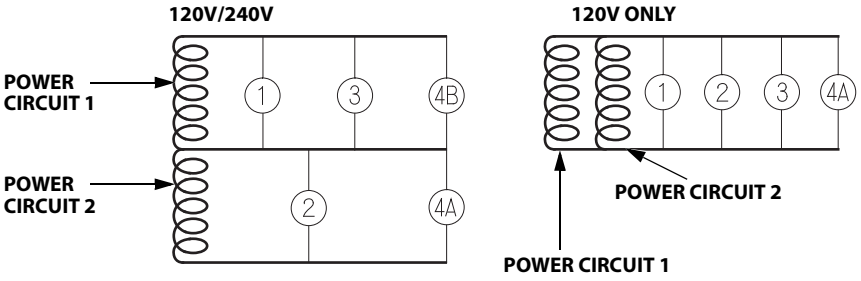

Voltage Selector Switch

The power available to each receptacle depends on the position of the voltage selector switch.

Switch Position	Receptacle	Available Power
		EG4000CL
120V ONLY	①	30A at 120V
	②	20A at 120V
	③	20A at 120V
	④A	20A at 120V
	④B	None
120V/240V	①	15.0A at 120V
	②	15.0A at 120V
	③	15.0A at 120V
	④A-④B	15.0A at 240V

120V ONLY POSITION

When the voltage selector switch is in the 120V ONLY position, you do not need to spread the load over the receptacles. You must, however, make sure the load on any receptacle does not exceed its available power shown below and the total load does not exceed the total current available.

Total Current Available: 30.0 A

120V/240V POSITION

When the voltage selector switch is in the 120V/240V position, you must balance the load. Divide the load between the two sets of receptacles shown below. Balancing is necessary because each set of receptacles is powered by only one power producing circuit that can produce a maximum of amps(*).

*: 15.0 A

Set of Receptacles	Total Current Available	Power Producing Circuit
	EG4000CL	
①+③+ ④B	15.0A	1
②+ ④A	15.0A	2

STANDBY POWER

Connections to a Building's Electrical System

Connections for standby power to a building's electrical system must be made by a qualified electrician. The connection must isolate the generator power from utility power, and must comply with all applicable laws and electrical codes.

⚠ WARNING

Improper connections to a building's electrical system can allow current from the generator to backfeed into the utility lines.

Such backfeed may electrocute utility company workers or others who contact the lines during a power outage, and the generator may explode, burn, or cause fires when utility power is restored.

Consult the utility company or a qualified electrician prior to making any power connections.

In some areas, generators are required by law to be registered with local utility companies. Check local regulations for proper registration and use procedures.

System Ground

This generator has a system ground that connects generator frame components to ground terminals in the AC output receptacles. The system ground is not connected to the AC neutral wire.

Special Requirements

There may be Federal or State Occupational Safety and Health Administration (OSHA) regulations, local codes, or ordinances that apply to the intended use of the generator. Please consult a qualified electrician, electrical inspector, or the local agency having jurisdiction.

- In some areas, generators are required to be registered with local utility companies.
- If the generator is used at a construction site, there may be additional regulations that must be observed.

SERVICING YOUR GENERATOR

THE IMPORTANCE OF MAINTENANCE

Good maintenance is essential for safe, economical, and trouble-free operation. It will also help reduce air pollution.

To help you properly care for your generator, the following pages include a maintenance schedule, routine inspection procedures, and simple maintenance procedures using basic hand tools. Other service tasks that are more difficult or require special tools are best handled by professionals and are normally performed by a Honda technician or other qualified mechanic.

The maintenance schedule applies to normal operating conditions. If you operate your generator under unusual conditions, such as sustained high-load or high-temperature operation, or use it in dusty conditions, consult your servicing dealer for recommendations applicable to your individual needs and use.

⚠ WARNING

Failure to properly maintain this generator, or failing to correct a problem before operation, could result in a significant malfunction.

Some malfunctions can cause serious injuries or death.

Always follow the inspection and maintenance recommendations and schedules in this owner's manual.

Remember that an authorized Honda Power Equipment dealer knows your generator best and is fully equipped to maintain and repair it.

To ensure the best quality and reliability, use only new, Honda Genuine parts or their equivalents for repair and replacement.

Maintenance, replacement, or repair of the emission control devices and systems may be performed by any engine repair establishment or individual, using parts that are "certified" to EPA standards.

MAINTENANCE SAFETY

Some of the most important safety precautions follow. However, we cannot warn you of every conceivable hazard that can arise in performing maintenance. Only you can decide whether or not you should perform a given task.

⚠ WARNING

Improper maintenance can cause an unsafe condition.

Failure to properly follow maintenance instructions and precautions can cause serious injuries or death.

Always follow the procedures and precautions in this owner's manual.

Safety Precautions

Read the instructions before you begin, and make sure you have the tools and skills required.

- Make sure the engine is off before you begin any maintenance or repairs. This will eliminate several potential hazards:
  - **Carbon monoxide poisoning from engine exhaust**
    Operate outside away from open windows or doors with engine exhaust directed away from occupied structures.
  - **Burns from hot parts**
    Let the engine and exhaust system cool before touching.
  - **Injury from moving parts**
    Do not run the engine unless instructed to do so.
- To reduce the possibility of fire or explosion, be careful when working around gasoline. Use only a non-flammable solvent, not gasoline, to clean parts. Keep cigarettes, sparks, and flames away from all fuel-related parts.

SERVICING YOUR GENERATOR

MAINTENANCE SCHEDULE

Failure to follow this maintenance schedule could result in non-warrantable failures.

REGULAR SERVICE PERIOD (3) Perform at every indicated month or operating hour interval, whichever comes first. / ITEM		Each use	First month or 20 Hrs.	Every 3 months or 50 Hrs.	Every 6 months or 100 Hrs.	Every year or 300 Hrs.	Page
Engine oil	Check level	o					33
	Change		o		o		55
Air cleaner	Check	o					34
	Clean			o (1)			56
GFCI operation	Check	o					42
Sediment cup	Clean				o		60
Spark plug	Check-adjust				o		57
	Replace					o	
Spark arrester	Clean				o		59
Idle speed	Check-adjust					o (2)	—
Valve clearance	Check-adjust					o (2)	—
Combustion chamber	Clean	After every 1,000 Hrs. (2)					—
Fuel tank and filter	Clean				o (2)		—
Fuel tube	Check	Every 2 years (Replace if necessary) (2)					—
Canister	Check	Every 2 years (2)					—
Purge tube	Check	Every 2 years (2)					—
Charge tube	Check	Every 2 years (2)					—

(1) Service more frequently when used in dusty areas.
(2) These items should be serviced by your servicing dealer, unless you have the proper tools and are mechanically proficient. Refer to the Honda shop manual for service procedures.
See "Honda PUBLICATIONS" on page 79 for ordering information.
(3) For commercial use, log hours of operation to determine proper maintenance intervals.

Tools

A box wrench and wrench handle are supplied with the generator.
Use the supplied tools to perform maintenance tasks. Using an incorrect tool may damage the generator.

ENGINE OIL CHANGE

Drain the oil while the engine is warm to assure rapid and complete draining.

1. Place a suitable container below the engine to catch the used oil, and then remove the oil filler cap, 12×15 mm drain plug, and sealing washer.

2. Allow the used oil to drain completely, and then reinstall the 12×15 mm drain plug and a new sealing washer. Tighten the plug securely.

   Torque: 16.3 lbf·ft (22.1 N·m, 2.25 kgf·m)

3. With the generator in a level position, fill with the recommended oil to the upper limit. Do not overfill.

   - "Upper limit" means the oil exists to the oil filler neck.
     Refer to "ENGINE OIL RECOMMENDATIONS" in page 16.

   Maximum oil capacity: 1.2 US qt (1.1 L)

4. Reinstall the oil filler cap securely.

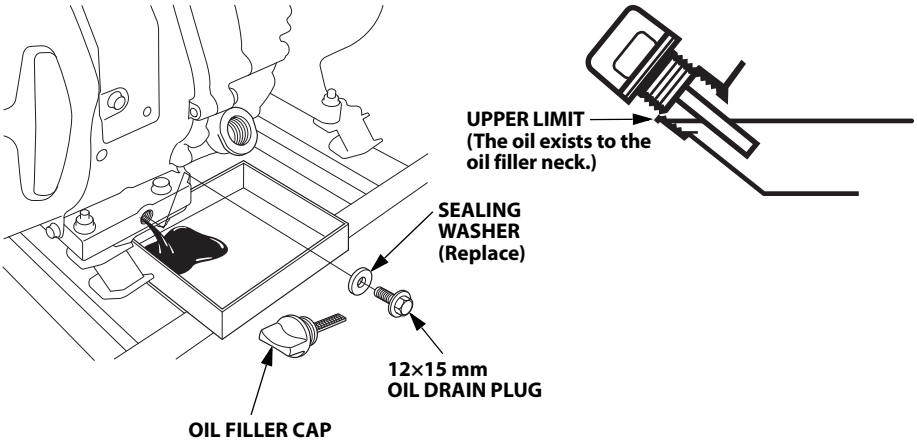

Wash your hands with soap and water after handling used oil.

NOTICE

Improper disposal of engine oil can be harmful to the environment. If you change your own oil, please dispose of it properly. Put it in a sealed container, and take it to a recycling center. Do not discard it in a trash bin, dump it on the ground, or pour it down a drain.

AIR CLEANER SERVICE

Foam Air Filter Cleaning

A dirty air cleaner element will restrict air flow to the carburetor, reducing engine performance. If you operate the generator in very dusty areas, clean the air cleaner element more frequently than specified in the Maintenance Schedule.

1. Clean the foam air filter in warm soapy water, rinse, and allow to dry thoroughly, or clean in non-flammable solvent and allow to dry.

2. Dip the foam air filter in clean engine oil, and then squeeze out all excess oil. The engine will smoke when started if too much oil is left in the filter.

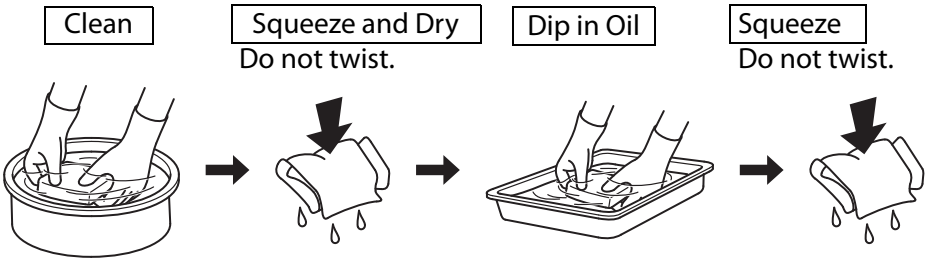

3. Wipe dirt from the air cleaner housing and cover using a moist rag. Be careful to prevent dirt from entering the air duct that leads to the carburetor.

SPARK PLUG SERVICE

In order to service the spark plug, you will need a spark plug wrench (commercially available).

Required spark plug: BPR5ES (NGK)

To ensure proper engine operation, the spark plug must be properly gapped and free of deposits.

NOTICE

An incorrect spark plug can cause engine damage.

If the engine is hot, allow it to cool before servicing the spark plug.

1. Disconnect the spark plug cap, and remove any dirt from around the spark plug area.

2. Remove the spark plug with a spark plug wrench.

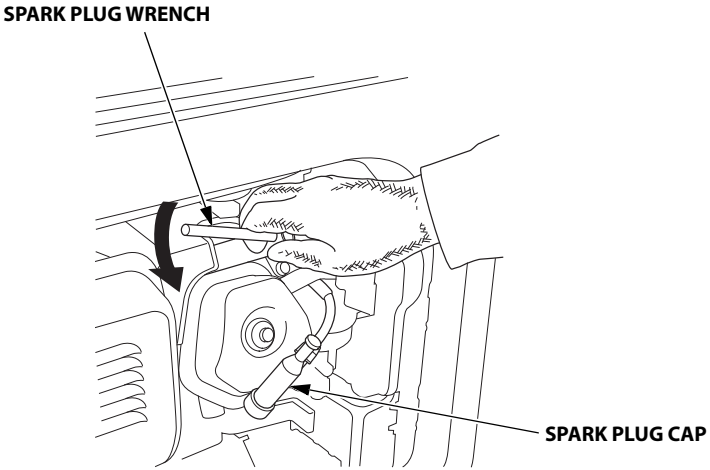

3. Inspect the spark plug. Replace it if the electrodes are worn or fouled, or if the insulator is cracked or chipped. Clean the spark plug with a wire brush if it is to be reused.

4. Measure the spark plug electrode gap with a wire-type feeler gauge. Correct the gap, if necessary, by carefully bending the side electrode.

   Spark plug gap:
   0.028–0.031 in (0.7–0.8 mm)

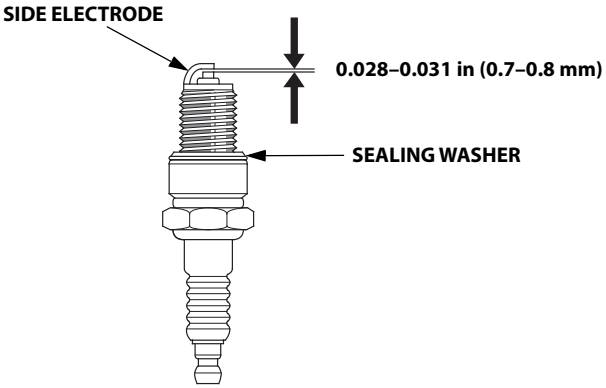

5. Make sure that the spark plug sealing washer is in good condition, and thread the spark plug in by hand to prevent cross-threading.

6. After the spark plug is seated, tighten with a spark plug wrench to compress the washer.
   If reinstalling a used spark plug, tighten 1/8–1/4 turn after the spark plug is seated.
   If installing a new spark plug, tighten 1/2 turn after the spark plug is seated.

   Torque: 13.0 lbf·ft (17.7 N·m, 1.8 kgf·m)

   NOTICE
   A loose spark plug can overheat and damage the engine.
   Overtightening the spark plug can damage the threads in the cylinder head.

7. Attach the spark plug cap.

SPARK ARRESTER SERVICE

The spark arrester must be serviced every 100 hours to keep it functioning as designed.

If the engine has been running, the muffler will be very hot. Allow the muffler to cool before servicing the spark arrester.

Clean the spark arrester as follows:

1. Remove the two 5 mm screws, and remove the spark arrester.

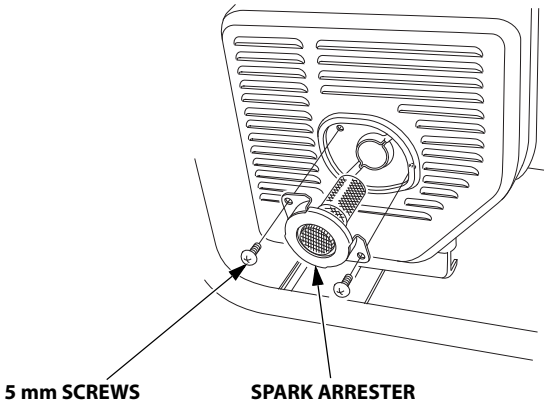

2. Use a brush to remove carbon deposits from the spark arrester screen.
   Be careful to avoid damaging the screen.
   The spark arrester must be free of breaks and tears. Replace the spark arrester if it is damaged.

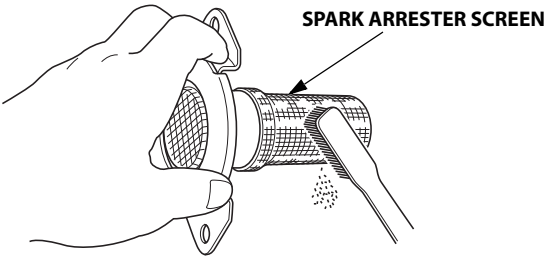

3. Install the spark arrester in the reverse order of removal.

SEDIMENT CUP CLEANING

The sediment cup prevents dirt or water that may be in the fuel tank from entering the carburetor. If the engine has not been run for a long time, the sediment cup should be cleaned.

⚠ WARNING

Gasoline is highly flammable and explosive.

You can be burned or seriously injured when handling fuel.

- Stop the engine and let it cool before handling fuel.
- Keep heat, sparks, and flame away.
- Handle fuel only outdoors.
- Keep away from your vehicle.
- Wipe up spills immediately.

1. Turn the engine switch to the OFF position.
2. Turn the fuel valve lever to the OFF position; then remove the sediment cup and the O-ring. Discard the O-ring.
3. Clean the sediment cup in nonflammable solvent, and dry it thoroughly.
4. Reinstall a new O-ring and sediment cup, and tighten the sediment cup securely.
5. Turn the fuel valve lever to the ON position and check for leaks.

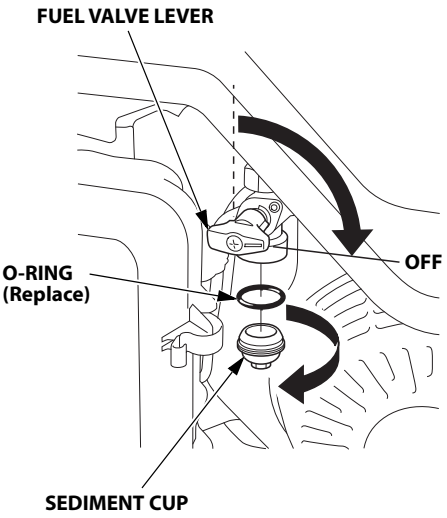

STORAGE

STORAGE PREPARATION

Proper storage preparation is essential for keeping your generator trouble-free and looking good. The following steps will help to keep rust and corrosion from impairing your generator's function and appearance, and will make the engine easier to start when you use the generator again.

Cleaning

Wipe the generator with a moist cloth. After the generator has dried, touch up any damaged paint, and coat other areas that may rust with a light film of oil.

Fuel

NOTICE

Depending on the region where you operate your equipment, fuel formulations may deteriorate and oxidize rapidly. Fuel deterioration and oxidation can occur in as little as 30 days and may cause damage to the carburetor and/or fuel system. Please check with your servicing dealer for local storage recommendations.

Gasoline will oxidize and deteriorate in storage. Old gasoline will cause hard starting, and it leaves gum deposits that clog the fuel system. If the gasoline in your generator deteriorates during storage, you may need to have the carburetor and other fuel system components serviced or replaced.
The length of time that gasoline can be left in your fuel tank and carburetor without causing functional problems will vary with such factors as gasoline blend, your storage temperatures, and whether the fuel tank is partly or completely filled. The air in a partly filled fuel tank promotes fuel deterioration. Very warm storage temperatures accelerate fuel deterioration. Fuel deterioration problems may occur within a few months, or even less if the gasoline was not fresh when you filled the fuel tank.

The *Distributor's Limited Warranty* does not cover fuel system damage or engine performance problems resulting from neglected storage preparation.
You can extend fuel storage life by adding a gasoline stabilizer that is formulated for that purpose, or you can avoid fuel deterioration problems by draining the carburetor, sediment cup, and/or fuel tank.

STORAGE

Service according to the table below:

STORAGE TIME	RECOMMENDED SERVICE PROCEDURE TO PREVENT HARD STARTING
Less than 1 month	No preparation required
1 to 2 months	Fill with fresh gasoline and add gasoline stabilizer*.
2 months to 1 year	Fill with fresh gasoline and add gasoline stabilizer*. Drain the carburetor float bowl (see page 63). Drain the fuel sediment cup (see page 60).
1 year or more	Fill with fresh gasoline and add gasoline stabilizer*. Drain the carburetor float bowl (see page 63). Drain the fuel sediment cup (see page 60). Remove the spark plug. Put a teaspoon of engine oil into the cylinder. Turn the engine slowly with the pull rope to distribute the oil. Reinstall the spark plug. Change the engine oil (see page 55). After removal from storage, drain the stored gasoline into a suitable container, and fill with fresh gasoline before starting.

* Use gasoline stabilizers that are formulated to extend storage life. Follow the manufacturer's instructions for use.
Contact your authorized Honda Power Equipment dealer for stabilizer recommendations.

DRAINING THE FUEL TANK AND CARBURETOR

⚠ WARNING

Gasoline is highly flammable and explosive.

You can be burned or seriously injured when handling fuel.

- Stop the engine and let it cool before handling fuel.
- Keep heat, sparks, and flame away.
- Handle fuel only outdoors.
- Keep away from your vehicle.
- Wipe up spills immediately.

1. Place a suitable gasoline container below the carburetor.
2. Turn the fuel valve lever to the OFF position, loosen the carburetor drain bolt by turning 1 to 2 turns counterclockwise, and drain the fuel from the carburetor.

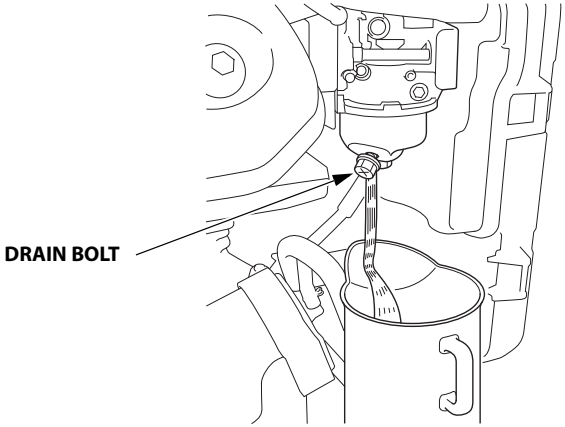

3. Remove the sediment cup (see page 60), and then turn the fuel valve lever to the ON position and drain the fuel from the fuel tank.

4. After all the fuel has drained into the container, tighten the carburetor drain bolt securely.

5. Install the sediment cup and a new O-ring.

6. Turn the fuel valve lever to the OFF position.

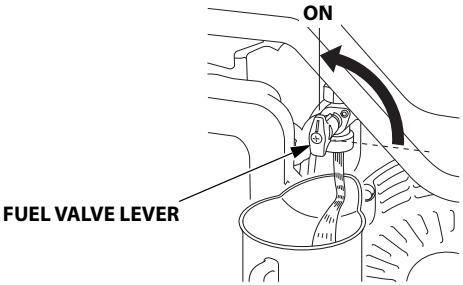

Engine Oil
Change the engine oil (see page 55).

Engine Cylinder
1. Remove the spark plug, and pour a teaspoon (5 cc) of clean engine oil into the cylinder. Crank the engine several revolutions to distribute the oil, then reinstall the spark plug.

2. Slowly pull the starter grip until resistance is felt. At this point, the piston is coming up on its compression stroke, and both the intake and exhaust valves are closed. Storing the engine in this position will help to protect it from internal corrosion.

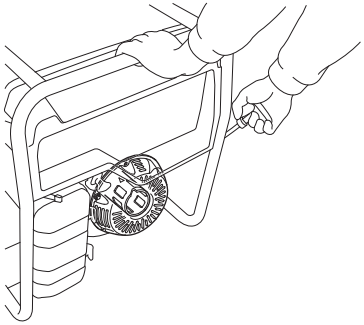

STORAGE PRECAUTIONS

If your generator will be stored with gasoline in the fuel tank and carburetor, it is important to reduce the hazard of gasoline vapor ignition.

Select a well ventilated storage area away from any appliance that operates with a flame, such as a furnace, water heater, or clothes dryer. Also avoid any area with a spark-producing electric motor, or where power tools are operated.

If possible, avoid storage areas with high humidity, because that promotes rust and corrosion.

Unless all fuel has been drained from the fuel tank, leave the engine switch in the OFF position, and the fuel valve lever in the OFF position (see page 40) to reduce the possibility of leakage.

Place the generator on a level surface. Tilting or laying it on its side can cause fuel or oil leakage.

With the engine and exhaust system cool, cover the generator to keep out dust. A hot engine and exhaust system can ignite or melt some materials.

Do not use a plastic sheet as a dust cover. A nonporous cover will trap moisture around the generator, promoting rust and corrosion.

REMOVAL FROM STORAGE

Check your generator as described in the "BEFORE OPERATION" chapter of this manual (see page 31).

If the generator was stored for 1 year or longer, drain the fuel tank (see page 63) and refuel with fresh gasoline. If you keep a container of gasoline for refueling, be sure that it contains only fresh gasoline. Gasoline oxidizes and deteriorates over time, causing hard starting.

If the cylinder was coated with oil during storage preparation, the engine may smoke briefly at startup. This is normal.

TRANSPORTING

⚠ CAUTION

An engine that has been running will remain very hot for a period of time.

A hot engine and exhaust system can burn you and ignite some material.

If the generator has been used, allow it to cool for at least 15 minutes before loading the generator on the transport vehicle.

To prevent spillage when transporting, the generator should be secured upright in its normal operating position, with the fuel valve OFF.

NOTICE

Do not lay the generator on its side when moving, storing, or operating it. Oil may leak and damage the engine or your property.

Do not operate the generator while it is being transported or while it is mounted to any type of vehicle, trailer, or boat.

Take care not to drop or strike the generator when transporting. Do not place heavy objects on the generator.

When using ropes or tie-down straps to secure the generator for transportation, be sure to only use the frame bars as attachment points. Do not fasten ropes or straps to any portions of the generator body.

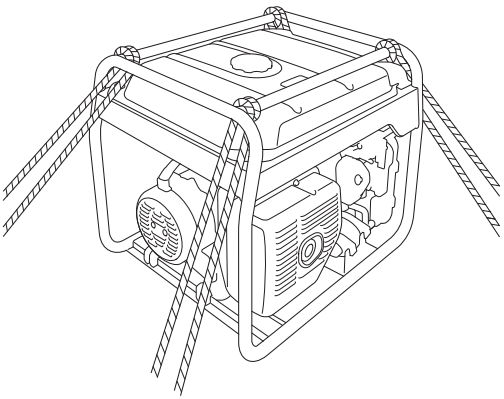

TAKING CARE OF UNEXPECTED PROBLEMS

ENGINE WILL NOT START

Possible Cause	Correction
Fuel valve lever OFF.	Turn lever ON (see page 38).
Choke OPEN.	Move to CLOSED unless engine is warm (see page 38).
Engine switch OFF.	Turn engine switch to ON (see page 38).
Out of fuel.	Refuel (see page 17).
Bad fuel; generator stored without treating or draining gasoline, or refueled with bad gasoline.	Drain fuel tank and carburetor (see page 63). Refuel with fresh gasoline (see page 17).
Low oil level caused Oil Alert to stop engine.	Add oil (see page 15). Turn engine switch to OFF and then restart the engine.
Spark plug faulty, fouled, or improperly gapped.	Gap or replace spark plug (see page 57).
Spark plug wet with fuel (flooded engine).	Dry and reinstall spark plug.
Fuel strainer restricted, carburetor malfunction, ignition malfunction, valves stuck, etc.	Take the generator to an authorized Honda Power Equipment dealer, or refer to the shop manual.
CO-MINDER (CO Shut-off System) is detecting high carbon monoxide (CO) levels around the generator.	Review the location of the generator, and place it in a well-ventilated outdoor location (see page 24). When the engine is stopped automatically by CO-MINDER, press the CO-MINDER reset button to restart the engine (see page 41).

ENGINE LACKS POWER

Possible cause	Correction
Air filter restricted.	Clean or replace air filter (see pages 34, 56).
Bad fuel; generator stored without treating or draining gasoline, or refueled with bad gasoline.	Drain fuel tank and carburetor (see page 63). Refuel with fresh gasoline (see page 17).
Fuel strainer restricted, carburetor malfunction, ignition malfunction, valves stuck, etc.	Take the generator to an authorized Honda Power Equipment dealer, or refer to the shop manual.

NO POWER AT THE AC RECEPTACLES

Possible Cause	Correction
AC circuit breaker left in the OFF position after starting.	Switch AC circuit breaker ON (see page 45).
GFCI system activated.	GFCI receptacle (120 V 20 A duplex receptacle): Test GFCI and press the GFCI RESET button (see page 42). Replace or repair power tool or appliance.
AC circuit protector tripped.	Check AC load and reset AC circuit protector (see page 27).
Faulty power tool or appliance.	Replace or repair power tool or appliance. Stop and restart the engine.
Faulty generator.	Take the generator to an authorized Honda Power Equipment dealer, or refer to the shop manual.

ENGINE AUTOMATICALLY STOP AND THE CO ALARM INDICATOR FLASHING

Possible Cause	Correction
CO concentration around the generator is high.	Review the location of the generator, and place it in a well-ventilated outdoor location (see page 24). When the engine is stopped automatically by CO-MINDER, press the CO-MINDER reset button to restart the engine (see page 41).

ENGINE AUTOMATICALLY STOP AND THE FAULT/CO SENSOR LIFE INDICATOR FLASHING

Possible Cause	Correction
CO sensor malfunction.	If the engine cannot be started and the CO ALARM indicator flashes, even if the location of the generator has changed, there may be a CO-MINDER malfunction. Consult an authorized Honda Power Equipment dealer.
CO sensor may have reached the end of its useful lifespan (see page 25).	Consult an authorized Honda Power Equipment dealer.

FAULT/CO SENSOR LIFE INDICATOR FLASHING WHEN RUNNING THE ENGINE

Possible Cause	Correction
CO sensor may reach the end of its useful lifespan (see page 25).	Consult an authorized Honda Power Equipment dealer for replacement.

TECHNICAL INFORMATION

SERIAL NUMBER LOCATION

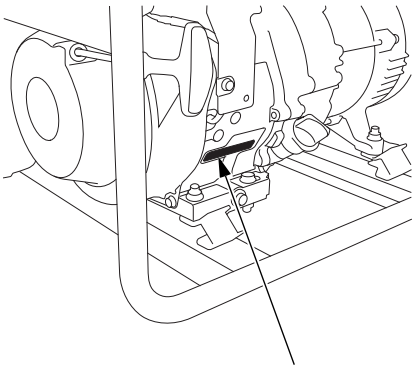

ENGINE SERIAL NUMBER

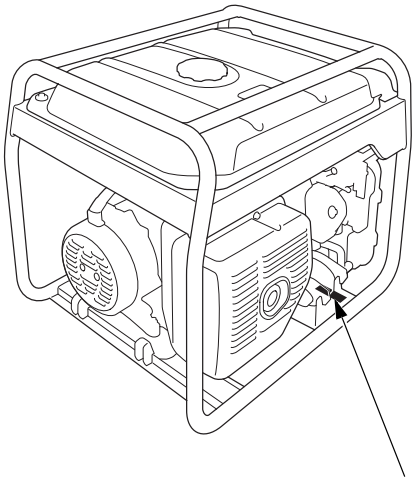

FRAME SERIAL NUMBER

Record the engine and frame serial numbers and date purchased in the spaces below. You will need this information when ordering parts and when making technical or warranty inquiries.

Engine serial number:_____

Frame serial number:_____

Date purchased:_____

CARBURETOR MODIFICATION FOR HIGH ALTITUDE OPERATION

At high altitude, the standard carburetor air-fuel mixture will be too rich. Performance will decrease, and fuel consumption will increase. A very rich mixture will also foul the spark plug and cause hard starting. Operation at an altitude that differs from that at which this engine was certified, for extended periods of time, may increase emissions.

High altitude performance can be improved by specific modifications to the carburetor. If you always operate your generator at altitudes above 2,000 feet (610 meters), have your authorized Honda servicing dealer perform this carburetor modification. This engine, when operated at high altitude with the carburetor modifications for high altitude use, will meet each emission standard throughout its useful life.

Even with carburetor modification, engine horsepower will decrease about 3.5% for each 1,000-foot (300-meter) increase in altitude. The effect of altitude on horsepower will be greater than this if no carburetor modification is made.

NOTICE

When the carburetor has been modified for high altitude operation, the air/fuel mixture will be too lean for low altitude use. Operation at altitudes below 2,000 feet (610 meters) with a modified carburetor may cause the engine to overheat and result in serious engine damage. For use at low altitudes, have your servicing dealer return the carburetor to original factory specifications.

EMISSION CONTROL SYSTEM INFORMATION

Source of Emissions

The combustion process produces carbon monoxide, oxides of nitrogen, and hydrocarbons. Control of hydrocarbons and oxides of nitrogen is very important because, under certain conditions, they react to form photochemical smog when subjected to sunlight. Carbon monoxide does not react in the same way, but it is toxic.

Honda utilizes appropriate air/fuel ratios and other emissions control systems to reduce the emissions of carbon monoxide, oxides of nitrogen, and hydrocarbons.

Additionally, Honda fuel systems utilize components and control technologies to reduce evaporative emissions.

The U.S. and California Clean Air Acts, and Environment and Climate Change Canada (ECCC)

U.S. EPA, California and Canadian regulations require all manufacturers to furnish written instructions describing the operation and maintenance of emission control systems.

The following instructions and procedures must be followed in order to keep the emissions from your Honda engine within the emission standards.

Tampering and Altering

NOTICE

Tampering is a violation of federal and California law.

Tampering with or altering the emission control system may increase emissions beyond the legal limit. Among those acts that constitute tampering are:

- Removal or alteration of any part of intake, fuel, or exhaust systems.
- Alterations that would cause the engine to operate outside its design parameters.

Problems That May Affect Emissions
If you are aware of any of the following symptoms, have your engine inspected and repaired by your authorized Honda Power Equipment dealer.

- Hard starting or stalling after starting.
- Rough idle.
- Misfiring or backfiring under load.
- Afterburning (backfiring).
- Black exhaust smoke or high fuel consumption.

Replacement Parts
The emissions control systems on your new Honda engine were designed, built, and certified to conform with EPA, California (models certified for sale in California only), and Canadian emissions regulations. We recommend the use of Honda Genuine parts whenever you have maintenance done. These original design replacement parts are manufactured to the same standards as the original parts, so you can be confident of their performance. Honda cannot deny coverage under the emission warranty solely for the use of non-Honda replacement parts or service performed at a location other than an authorized Honda dealership; you may use comparable EPA certified parts, and have service performed at non-Honda locations. However, the use of replacement parts that are not of the original design and quality may impair the effectiveness of your emissions control system.
A manufacturer of an aftermarket part assumes the responsibility that the part will not adversely affect emissions performance. The manufacturer or rebuilder of the part must certify that use of the part will not result in a failure of the engine to comply with emissions regulations.

Maintenance
As the power equipment engine owner, you are responsible for completing all required maintenance listed in your owner's manual. Honda recommends that you retain all receipts covering maintenance on your power equipment engine, but Honda cannot deny warranty coverage solely for the lack of receipts or for your failure to ensure that all scheduled maintenance has been completed. Follow the "MAINTENANCE SCHEDULE" on page 54.
Remember that this schedule is based on the assumption that your Honda engine product will be used for its designed purpose. Sustained high-load or high-temperature operation, or use in dusty conditions, will require more frequent service.

Air Index
(Models certified for sale in California)
An Air Index Information label is applied to engines certified to an emission durability time period in accordance with the requirements of the California Air Resources Board.

The bar graph is intended to provide you, our customer, the ability to compare the emissions performance of available engines. The lower the Air Index, the less pollution.

The durability description is intended to provide you with information relating to the engine's emission durability period. The descriptive term indicates the useful life period for the engine's emission control system. See your "Emission Control System Warranty" (see page 86) for additional information.

Descriptive Term	Applicable to Emission Durability Period
Moderate	50 hours (0–80 cc, inclusive) 125 hours (greater than 80 cc)
Intermediate	125 hours (0–80 cc, inclusive) 250 hours (greater than 80 cc)
Extended	300 hours (0–80 cc, inclusive) 500 hours (greater than 80 cc) 1,000 hours (225 cc and greater)

SPECIFICATIONS

Dimensions

Model	EG4000CL
Type	AG, AN
Description code	EBGC
Length	26.8 in (681 mm)
Width	20.9 in (530 mm)
Height	22.5 in (571 mm)
Dry mass [weight]	146.4 lbs (66.4 kg)

Engine

Model	GX270T2
Engine type	4-stroke, overhead valve, single cylinder
Displacement [Bore×Stroke]	16.5 cu-in (270 cm^3) [3.03×2.28 in (77.0×58.0 mm)]
Compression ratio	8.5:1
Engine speed	3,600 rpm
Cooling system	Forced air
Ignition system	CDI magneto
Oil capacity	1.2 US qt (1.1 L)
Fuel tank capacity	6.34 US gal (24.0 L)
Spark plug	BPR5ES (NGK)

Generator

Model		EG4000CL
Type		AG, AN
AC output	Rated voltage	120 V/240 V
	Rated frequency	60 Hz
	Rated current	30.0 A/15.0 A
	Rated output	3.6 kVA
	Maximum output	4.0 kVA

Tuneup

ITEM	SPECIFICATION	MAINTENANCE
Spark plug gap	0.028–0.031 in (0.7–0.8 mm)	Refer to page 57
Valve clearance (cold)	IN: 0.15±0.02 mm EX: 0.20±0.02 mm	See your authorized Honda dealer.
Other specifications	No other adjustments needed.	

Specifications may vary according to the types, and are subject to change without notice.

WIRING DIAGRAM

Abbreviations

Symbol	Part name
AC O	AC Outlet
AC CB	AC Circuit Breaker
CBB	Control Box Block
D-AVR	Digital-Automatic Voltage Regulator
D-CDI	Digital-CDI
ESw	Engine Switch
EgB	Engine Block
EX W	Exciter Winding
FrB	Frame Block
Fu	Fuse
FW	Field Winding
GeB	Generator Block
GFCI	Ground Fault Circuit Interrupter
GND	Ground
GT	Ground Terminal
IgC	Ignition Coil
J/B	Junction Box
MW	Main Winding
OLSw	Oil Level Switch
PoC	Power Coil
SP	Spark Plug
VSSw	Voltage Selector Switch

Wire color code

Bl	BLACK
Y	YELLOW
Bu	BLUE
G	GREEN
R	RED
W	WHITE
Br	BROWN
Lg	LIGHT GREEN
Gr	GRAY
Lb	LIGHT BLUE
O	ORANGE
P	PINK
V	VIOLET

Engine switch

	IG	DC12V
OFF		
ON	o———	———o

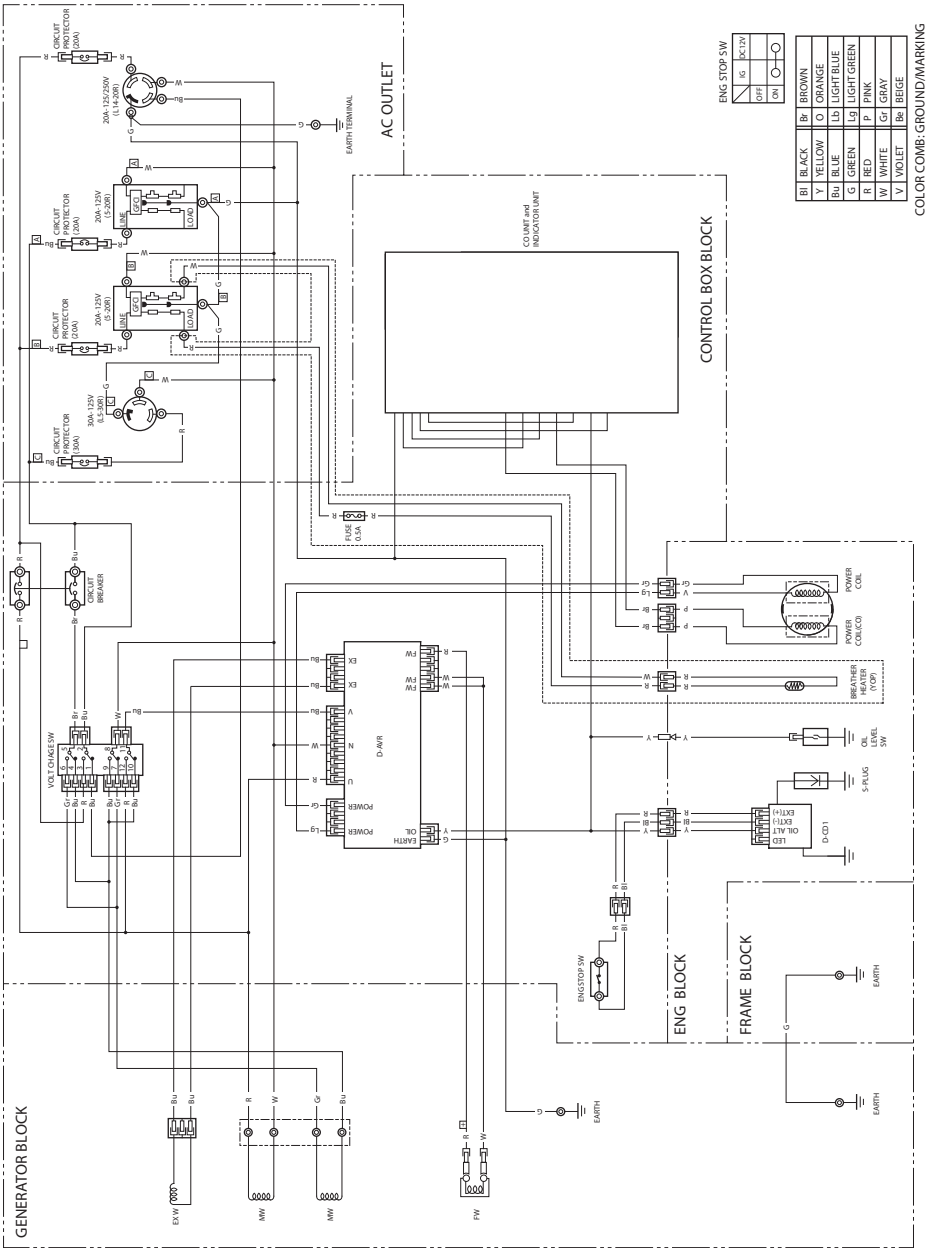
GENERATOR BLOCK
ENG BLOCK
FRAME BLOCK
CONTROL BOX BLOCK
AC OUTLET
CO UNIT and INDICATOR UNIT
CIRCUIT PROTECTOR (20A)
CIRCUIT PROTECTOR (10A)
CIRCUIT PROTECTOR (30A)
CIRCUIT BREAKER
FUSE 0.5A
EARTH TERMINAL
20A-125/250V (L14-20R)
20A-125V (5-20R)
30A-125V (L5-30R)
VOLT CHANGE SW
D-AVR
POWER COIL
POWER COIL(CO)
BREATHER HEATER (TYP.)
OIL LEVEL SW
S-PLUG
D-CD
LED
OIL ALT
EXT(+)
EXT(-)
ENG STOP SW
EARTH
EX W
MW
FW
ENG STOP SW
XG
DC12V
OFF
ON
COLOR COMB: GROUND/MARKING
Bl BLACK
Y YELLOW
Bu BLUE
G GREEN
R RED
W WHITE
V VIOLET
Br BROWN
O ORANGE
Lb LIGHT BLUE
Lg LIGHT GREEN
P PINK
Gr GRAY
Be BEIGE

CONSUMER INFORMATION

DEALER LOCATOR INFORMATION

To find an authorized Honda Servicing Dealer anywhere in the United States, visit our website:
http://powerequipment.honda.com/dealer-locator

Honda PUBLICATIONS

Shop Manual

This manual covers complete maintenance and overhaul procedures.
It is intended to be used by a skilled technician.
Available through your Honda dealer or visit
http://powerequipment.honda.com/support/shop-manuals

Parts Catalog

This manual provides complete, illustrated parts lists for your generator. Visit peparts.honda.com for free online access to the parts catalog. It is also available for purchase in paper form through your Honda dealer.

Accessories Catalog

Your authorized Honda Power Equipment dealer offers a wide selection of accessories (optional equipment) to make your generator even more useful. Visit http://powerequipment.honda.com/generators/accessories and click on See all generator accessories and Welders to see the entire catalog of accessories.

CONSUMER INFORMATION

CUSTOMER SERVICE INFORMATION

Honda Power Equipment dealership personnel are trained professionals. They should be able to answer any question you may have. If you encounter a problem that your dealer does not solve to your satisfaction, please discuss it with the dealership's management. The Service Manager or General Manager can help. Almost all problems are solved in this way.

If you are dissatisfied with the decision made by the dealership's management, contact the Honda Power Equipment Customer Relations Office. You can write to:

American Honda Motor Co., Inc.
Power Equipment Division
Customer Relations Office
4900 Marconi Drive
Alpharetta, Georgia 30005-8847

Or telephone: (770) 497-6400 M-F 9:00am - 7:30pm ET

When you write or call, please give us this information:

- Model and serial numbers (see page 70)
- Name of the dealer who sold the generator to you
- Name and address of the dealer who services your generator
- Date of purchase
- Your name, address, and telephone number
- A detailed description of the problem

Distributor's Limited Warranty

This warranty is limited to the following Honda products when distributed by American Honda Motor Co., Inc., Power Sports and Products Division, 4900 Marconi Drive, Alpharetta, Georgia 30005. **The following warranty applies to products manufactured on or after April 1, 2023.**

PRODUCTS COVERED BY THIS WARRANTY:	**LENGTH OF WARRANTY: (1)** (FROM DATE OF ORIGINAL RETAIL PURCHASE)	
	PRIVATE RESIDENTIAL (2)	**COMMERCIAL/ RENTAL/INSTITUTIONAL**
Generators	36 months	12 months
The Parts, Accessories, and Apparel warranty is on page 84		

(1) Length of Warranty: Batteries supplied with applicable products as standard, original equipment are covered by this warranty for a period of 12 months (private residential) or 3 months (commercial/rental/institutional use) from the date of original retail product purchase.

(2) Private residential: Used in maintaining owner's primary and/or secondary residence. Any other use, including but not limited to informal "for hire" use, is considered commercial/rental/institutional use.

To Qualify for This Warranty:
The product must be purchased in the United States, Puerto Rico, or the U.S. Virgin Islands from American Honda or a dealer authorized by American Honda to sell those products. This warranty applies to first retail purchaser and each subsequent owner during the applicable warranty time period, unless noted otherwise.

What American Honda Will Repair or Replace Under Warranty:
American Honda will repair or replace, at its option, any part that is proven to be defective in material or workmanship under normal use during the applicable warranty time period. Warranty repairs and replacements will be made without charge for parts or labor. Anything replaced under warranty becomes the property of American Honda Motor Co., Inc. All parts replaced under warranty will be considered as part of the original product, and any warranty on those parts will expire coincident with the original product warranty.

CONSUMER INFORMATION

To Obtain Warranty Service:
You must, at your expense, take the Honda Power Equipment product, accessory, replacement part, apparel, or the power equipment on which the accessory or replacement part is installed, and proof of purchase to any Honda Power Equipment dealer in the United States, Puerto Rico, or the U.S. Virgin Islands who is authorized to sell and/or service that product, during the dealer's normal business hours. To locate a dealer near you, visit our web site at http://powerequipment.honda.com and click on Find a Dealer.
If you are unable to obtain warranty service or are dissatisfied with the warranty service you receive, contact the owner of the dealership involved; normally this will resolve the problem. However, if you should require further assistance, write or call the Power Equipment Customer Relations Department of American Honda Motor Co., Inc. at the following address:

American Honda Motor Co., Inc.
Power Equipment Customer Relations Dept.
4900 Marconi Drive
Alpharetta, GA 30005-8847 Telephone: (770) 497-6400

Exclusions:

1. Any damage or deterioration resulting from the following:
   - Neglect of the periodic maintenance as specified in the product owner's manual
   - Improper repair or maintenance
   - Operating methods other than those indicated in the product owner's manual
   - Increasing engine speed beyond factory specification
   - The use of non-genuine Honda parts, accessories, lubricants, and fluids other than those approved by Honda
   - Exposure of the product to soot and smoke, chemical agents, bird droppings, sea water, salt, or other corrosive environments
   - Collision, fuel contamination or deterioration, neglect, unauthorized alteration, misuse, incorporation or use of unsuitable attachments or parts
   - Normal wear and tear (including, but not limited to, normal fading of painted or plated surfaces, sheet peeling, and other natural deterioration)
2. Consumable parts: Honda does not warrant parts deterioration due to normal wear and tear. The following parts are not covered by this warranty unless they are needed during another repair covered under this warranty: spark plug, fuel filter, air cleaner element, clutch disc, tire, wheel bearing, recoil starter rope, cable, belt, cutter blade, oil, and grease.
3. Cleaning, adjustment, and normal periodic maintenance work (carburetor cleaning, engine oil draining, blade sharpening, belt and cable adjustments).
4. Any product that has ever been declared a total loss or sold for salvage by a financial institution or insurer.
5. Auger and paddle assemblies, skid shoes, and scraper bars of snow throwers/snow blowers, tiller tines of roto-tillers, and mower blades and mower deck housings are specifically not warranted against impact damage including, but not limited to, abrasive damage.

Disclaimer of Consequential Damage and Limitation of Implied Warranties:
American Honda disclaims any responsibility for loss of time or use of the product, transportation, commercial loss, or any other incidental or consequential damage. Any implied warranties are limited to the duration of this written limited warranty. Some states do not allow limitations on how long an implied warranty lasts and/or do not allow the exclusion or limitation of incidental or consequential damages, therefore the above exclusions and limitations may not apply to you. This warranty gives you specific legal rights, and you may also have other rights, which vary from state to state.

Honda Parts, Accessories, and Apparel

This warranty is limited to Honda Power Equipment parts, accessories, and apparel when distributed by American Honda Motor Co., Inc., 4900 Marconi Drive, Alpharetta, Georgia 30005-8847.

PRODUCTS COVERED BY WARRANTY:	LENGTH OF WARRANTY: (FROM DATE OF ORIGINAL RETAIL PURCHASE)	
	PRIVATE RESIDENTIAL	COMMERCIAL/ RENTAL/INSTITUTIONAL
Parts	6 months	3 months
Batteries	6 months	3 months
Accessories	12 months	3 months
Apparel	6 months	3 months

To Qualify for This Warranty:

1. The parts, accessories, or apparel must be purchased from American Honda or a dealer authorized by American Honda to sell those products in the United States, Puerto Rico, and the U.S. Virgin Islands. Parts and accessories must be purchased for installation on original Honda equipment or engines to be eligible for warranty coverage.
   Installing parts and accessories on non-Honda products or engines voids this warranty.
2. You must be the first retail purchaser. This warranty is not transferable to subsequent owners.

What American Honda Will Repair or Replace Under Warranty:

American Honda will repair or replace, at its option, any Honda Power Equipment parts, accessories, or apparel that are proven to be defective in material or workmanship under normal use during the applicable warranty time period. Anything replaced under warranty becomes the property of American Honda Motor Co., Inc. The warranty on all parts, accessories, and apparel replaced under warranty will expire coincident with the original warranty on the replaced parts, accessories, or apparel.

Parts and accessories installed by a dealer who is authorized by American Honda to sell them will be repaired or replaced under warranty without charge for parts or labor. If installed by anyone else, parts and accessories will be repaired or replaced under warranty without charge for parts, but any labor charges will be the responsibility of the purchaser.

Apparel will be repaired or replaced under warranty without any charge.

To Obtain Warranty Service:
You must, at your expense, take the Honda Power Equipment part, accessory, or apparel, or the Honda Power Equipment on which the accessory or part is installed, and proof of purchase to any Honda Power Equipment dealer in the United States, Puerto Rico, or the U.S. Virgin Islands who is authorized to sell that product, during the dealer's normal business hours.
To locate a dealer near you, go to our web site at http://PowerEquipment.Honda.com and click on Find a Dealer.
If you are unable to obtain warranty service or are dissatisfied with the warranty service you receive, contact the owner of the dealership involved; normally this will resolve the problem. However, if you should require further assistance, write or call the Power Equipment Customer Relations Department of American Honda Motor Co., Inc. Refer to page 82 for contact information.

Exclusions:
This warranty does not extend to parts, accessories, or apparel affected or damaged by collision, normal wear, use in an application for which the product was not designed, or any other misuse, neglect, incorporation or use of unsuitable attachments or parts, unauthorized alteration, improper installation, or any causes other than defects in material or workmanship of the product. Installing parts and accessories on non-Honda products or engines voids this warranty.

Disclaimer of Consequential Damage and Limitation of Implied Warranties:
American Honda disclaims any responsibility for loss of time or use of the product, or the power equipment on which the product is installed, transportation, commercial loss, or any other incidental or consequential damage. Any implied warranties are limited to the duration of this written warranty. Some states do not allow limitations on how long an implied warranty lasts and/or do not allow the exclusion or limitation of incidental or consequential damages, so the above exclusions and limitations may not apply to you.
This warranty gives you specific legal rights, and you may also have other rights, which vary from state to state.

Emission Control System Warranty

Your new Honda Power Equipment engine complies with the U.S. EPA, Environment Canada, and State of California (models certified for sale in California only) emission regulations. American Honda Motor Co., Inc. provides the emission warranty coverage for engines in the United States and its territories. Honda Canada Inc. provides the emission warranty for engines in the 13 provinces and territories of Canada. In the remainder of this Emission Control System Warranty, American Honda Motor Co., Inc. and Honda Canada Inc. will be referred to as Honda.

CALIFORNIA EXHAUST AND EVAPORATIVE EMISSIONS CONTROL WARRANTY STATEMENT YOUR WARRANTY RIGHTS AND OBLIGATIONS

The California Air Resources Board and Honda are pleased to explain the exhaust and evaporative emissions ("emissions") control system warranty on your 2020 and later Honda Power Equipment engine. In California, new equipment that use small off-road engines must be designed, built, and equipped to meet the State's stringent anti-smog standards. Honda must warrant the emissions control system on your power equipment engine for the periods of time listed below provided there has been no abuse, neglect, or improper maintenance of your small off-road engine or equipment leading to the failure of the emissions control system.

Your emissions control system may include parts such as the carburetor or fuel-injection system, the ignition system, catalytic converter, fuel tanks, fuel lines (for liquid fuel and fuel vapors), fuel caps, valves, canisters, filters, clamps and other associated components. Also included may be hoses, belts, connectors, and other emission-related assemblies (see page 90 for additional covered parts).

Where a warrantable condition exists, Honda will repair your power equipment engine at no cost to you including diagnosis, parts and labor.

MANUFACTURER'S WARRANTY COVERAGE:

The exhaust and evaporative emissions control system on your Honda power equipment engine is warranted for two years. If any emissions-related part on your Honda power equipment engine is defective, the part will be repaired or replaced by Honda.

OWNER'S WARRANTY RESPONSIBILITY:

- As the power equipment engine owner, you are responsible for the performance of the required maintenance listed in your owner's manual. Honda recommends that you retain all receipts covering maintenance on your power equipment engine, but Honda cannot deny warranty coverage solely for the lack of receipts or for your failure to ensure the performance of all scheduled maintenance.
- As the power equipment engine owner, you should however be aware that Honda may deny you warranty coverage if your power equipment engine or a part has failed due to abuse, neglect, improper maintenance, or unapproved modifications.
- You are responsible for presenting your power equipment engine to a Honda Power Equipment servicing dealer as soon as the problem exists. The warranty repairs shall be completed in a reasonable amount of time, not to exceed 30 days.

If you have any questions regarding your warranty rights and responsibilities, you should contact the Honda office in your region:

American Honda Motor Co., Inc.
Power Equipment Customer Relations
4900 Marconi Drive
Alpharetta, Georgia 30005-8847
Telephone: (888) 888-3139
Email: powerequipmentemissions@ahm.honda.com

or

Honda Canada Inc.
Power Equipment Customer Relations
180 Honda Blvd.
Markham, ON, L6C 0H9
Telephone: (888) 946-6329

YOUR WARRANTY RIGHTS AND OBLIGATIONS

Other States, U.S. territories, and Canada:
In other areas of the United States and in Canada, your engine must be designed, built, and equipped to meet the U.S. EPA and Environment Canada emission standards for spark-ignited engines at or below 19 kilowatts.

Specific Honda products that do not meet the California emissions regulations can be identified by a "California: Not for sale or use" or "California: Only for use in Farming or Construction Equipment" decal.

All of the United States and Canada:
The exhaust and evaporative emissions control system on your Honda power equipment engine sold in the United States and Canada is warranted for two years from the date of delivery to the ultimate purchaser or the length of the Honda Distributor's Limited Warranty, whichever is longer. This warranty is transferable to each subsequent purchaser for the duration of the warranty period.

If any emissions-related part on your Honda power equipment engine is defective, the part will be repaired or replaced by Honda. All defective parts replaced under this warranty become the property of Honda. Only Honda approved replacement parts may be used in the performance of any warranty repairs and must be provided without charge to the owner. A list of warranted parts is on the reverse side of this warranty statement. All emission related parts are under warranty for the remainder of the warranty period. Normal maintenance items, such as spark plugs and filters, that are on the warranted parts list are warranted up to their required replacement interval only.

Honda will also replace other engine components damaged by a failure of any warranted part during the warranty period. Honda cannot deny coverage under the emission warranty solely for use of non-Honda replacement parts or service performed at a location other than an authorized Honda dealership; however, use of a part that is not functionally identical to the original equipment part in any respect that may in any way affect emissions (including durability) could result in denial of coverage. If such a non-Honda replacement part is used in the repair or maintenance of your engine, and an authorized Honda dealer determines it is defective or causes a failure of a warranted part, your claim for repair of your engine may be denied. If the part in question is not related to the reason your engine requires repair, your claim will not be denied.

TO OBTAIN WARRANTY SERVICE:

You must, at your own expense, take your Honda Power Equipment engine or the product on which it is installed, along with your sales registration card or other proof of original purchase date, to any Honda Power Equipment dealer who is authorized by Honda to sell and service that Honda product during their normal business hours. Claims for repair or adjustment found to be caused solely by defects in material or workmanship will not be denied because the engine was not properly maintained and used.
If you are unable to obtain emission warranty service or are dissatisfied with the warranty service you received, contact the owner of the dealership involved. Normally this should resolve your problem. However, if you require further assistance, contact the Honda office in your region:

American Honda Motor Co., Inc.
Power Equipment Customer Relations
4900 Marconi Drive
Alpharetta, Georgia 30005-8847
Telephone: (888) 888-3139
Email: powerequipmentemissions@ahm.honda.com

or

Honda Canada Inc.
Power Equipment Customer Relations
180 Honda Blvd.
Markham, ON, L6C 0H9
Telephone: (888) 946-6329

EXCLUSIONS:

Failures other than those resulting from defects in material or workmanship are not covered by this warranty. This warranty does not extend to emission control systems or parts that are affected or damaged by owner abuse, neglect, improper maintenance, or unapproved modifications.
This warranty does not cover replacement of expendable maintenance items made in connection with required maintenance service after the item's first scheduled replacement as listed in the maintenance section of the product owner's manual, such as: spark plugs and filters.

DISCLAIMER OF CONSEQUENTIAL DAMAGE AND LIMITATION OF IMPLIED WARRANTIES:

American Honda Motor Co., Inc. and Honda Canada Inc. disclaim any responsibility for incidental or consequential damages such as loss of time or the use of the power equipment, or any commercial loss due to the failure of the equipment; and any implied warranties are limited to the duration of this written warranty. This warranty is applicable only where the California, U.S. EPA, or Environment Canada emission control system warranty regulation is in effect.

EMISSION CONTROL SYSTEM WARRANTY PARTS:

SYSTEMS COVERED BY THIS WARRANTY:	PARTS DESCRIPTION:
Fuel Metering	Carburetor assembly (includes starting enrichment system), Oxygen sensor, Throttle body, Engine temperature sensor, Engine control module, Fuel injector, Fuel regulator, Intake manifold
Evaporative	Fuel tank, Fuel cap, Fuel lines (for liquid and fuel vapors), Carbon canister, Canister mounting brackets, Fuel line fittings, Fuel strainer, Fuel valve, Fuel pump, Fuel hose joint, Canister purge port connector, Evaporative emission canister purge valve
Exhaust	Catalyst, Exhaust pipe, Muffler (with catalyst), Exhaust manifold
Air Induction	Air cleaner case, Air cleaner element*
Ignition	Flywheel comp., Flywheel magneto, Ignition pulse generator, Crankshaft position sensor, Power coil, Ignition coil assembly, Ignition control module, Spark plug cap, Spark plug*
Crankcase Emission Control	Crankcase breather tube, Breather valve assembly, Oil filler cap
Miscellaneous Parts	Tubing, fittings, seals, gaskets, and clamps associated with these listed systems.

*Covered up to the first required replacement only.
See the "MAINTENANCE SCHEDULE" on page 54.

REGISTRATION

Please Register Your Generator

If your dealer did not collect registration information from you, please take a few minutes and register your purchase with Honda. This allows us to contact you with any important updates regarding your generator. Please note registration is not required to obtain warranty service. You can register your generator by visiting the Honda Power Equipment website, http://powerequipment.honda.com/support and click on Product Registration. Your information will remain confidential. It will not be released to any other company or organization.

INDEX

A

AC Appliance and Power Cord 32
AC Applications 47
AC Circuit Breaker 26
AC Circuit Protectors 27
AC OPERATION 45
AC Receptacle Selection 48
AIR CLEANER SERVICE 56
AIR FILTER CHECK 34
Air Index 74
ARE YOU READY TO GET STARTED? 31
ASSEMBLY 12, 13
Automatic Engine Stop Function 29

B

BEFORE OPERATION 31

C

Carbon Monoxide Hazards 7
CARBURETOR MODIFICATION FOR HIGH ALTITUDE OPERATION 71
Check the Engine 32
Check the GFCI 32
Choke Lever 23
Cleaning 61
CO-MINDER (CO Shut-off System) 24
COMPONENT & CONTROL LOCATIONS 20
Connections to a Building's Electrical System 50
CONSUMER INFORMATION 79
CONTROLS & FEATURES 20
CONTROLS 22
CUSTOMER SERVICE INFORMATION 80

D

DEALER LOCATOR INFORMATION 79
Distributor's Limited Warranty 81

E

Electric Shock Hazards 8
EMISSION CONTROL SYSTEM INFORMATION 72
Emission Control System Warranty 86
ENGINE AUTOMATICALLY STOP AND THE CO ALARM INDICATOR FLASHING 69

ENGINE AUTOMATICALLY STOP AND THE FAULT/CO SENSOR LIFE INDICATOR FLASHING 69
Engine Cylinder 64
ENGINE LACKS POWER 68
ENGINE OIL CHANGE 55
ENGINE OIL LEVEL CHECK 33
ENGINE OIL RECOMMENDATIONS 16
ENGINE OIL 15, 64
Engine Switch 22
ENGINE WILL NOT START 67

F

FAULT/CO SENSOR LIFE INDICATOR FLASHING WHEN RUNNING THE ENGINE 69
FEATURES 29
Fire and Burn Hazards 8
Foam Air Filter Cleaning 56
Fuel Gauge 30
FUEL RECOMMENDATIONS 19
Fuel Valve Lever 23
FUEL 17, 61

G

GENERATOR SAFETY 6
GFCI OPERATION CHECK 42
Ground Fault Circuit Interrupter (GFCI) Receptacle 28
Ground Terminal 30

H

Handle Installation (Optional Parts) 13
Honda PUBLICATIONS 79
HOW TO RESTART WHEN STOPPED BY CO-MINDER (CO SHUT-OFF SYSTEM) 41

I

IMPORTANT SAFETY INFORMATION 6
INITIAL USE INSTRUCTIONS 15
INTRODUCTION 1
IS YOUR GENERATOR READY TO GO? 31

K

Knowledge 31

INDEX

M

MAINTENANCE SAFETY 53
MAINTENANCE SCHEDULE 54

N

NO POWER AT THE AC RECEPTACLES 68

O

Oil Alert® System 29
OPERATION 37
Operator Responsibility 6

P

Please Register Your Generator 91
Power Producing Circuits 48

Q

QUICK REFERENCE INFORMATION ..... inside back cover

R

Refuel With Care 9
REGISTRATION 91
REMOVAL FROM STORAGE 65

S

SAFE OPERATING PRECAUTIONS 36
SAFETY LABEL LOCATIONS 10
Safety Precautions 53
SAFETY 12
SEDIMENT CUP CLEANING 60
SERIAL NUMBER LOCATION 70
SERVICING YOUR GENERATOR 52
SPARK ARRESTER SERVICE 59
SPARK PLUG SERVICE 57
Special Requirements 51
SPECIFICATIONS 75
STANDBY POWER 50
Starter Grip 22
STARTING THE ENGINE 37
STOPPING THE ENGINE 40
STORAGE PRECAUTIONS 65
STORAGE PREPARATION 61
STORAGE 61

System Ground 50

T

TAKING CARE OF UNEXPECTED PROBLEMS 67
TECHNICAL INFORMATION 70
THE IMPORTANCE OF MAINTENANCE 52
The Importance of Proper Assembly 12
Tools 54
TRANSPORTING 66

V

Vehicles and Transportation Hazards 9
Voltage Selector Switch 26, 49

W

Wheel Kit Installation (Optional Parts) 14
WIRING DIAGRAM 77

MEMO

QUICK REFERENCE INFORMATION

Fuel	Type	Regular unleaded gasoline with an ethanol content of no more than 10% and a pump octane rating of 86 or higher (see page 19)
Engine Oil	Type	SAE 10W-30, API SJ or later (or equivalent), for general use (see page 16) Maximum oil capacity: 1.2 US qt (1.1 L)
Spark Plug	Type	BPR5ES (NGK)
	Electrode Gap	0.028–0.031 in (0.7–0.8 mm)
Maintenance	Before each use	Check engine oil level. Check air filter. Check GFCI operation.
	First 20 hours	Change engine oil.
	Subsequent	See "MAINTENANCE SCHEDULE" (see page 54)

HONDA

EG4000CL
31Z33604
00X31-Z33-6040

AH 英 FM
Hi

Printed in China