Parts:

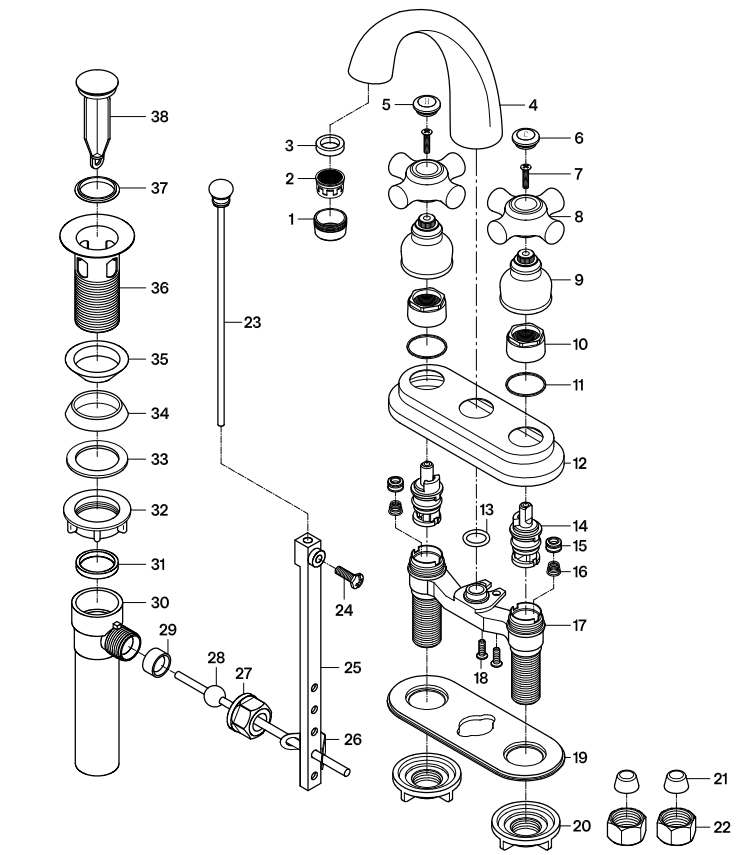

Replacement Parts:

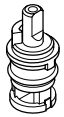

Cartridge: KBRP101C

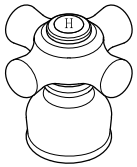

Hot Handle: KBH721PXH

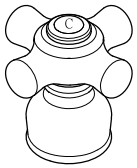

Cold Handle: KBH721PXC

KINGSTON

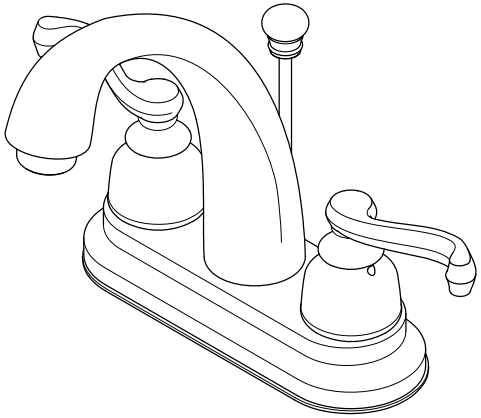

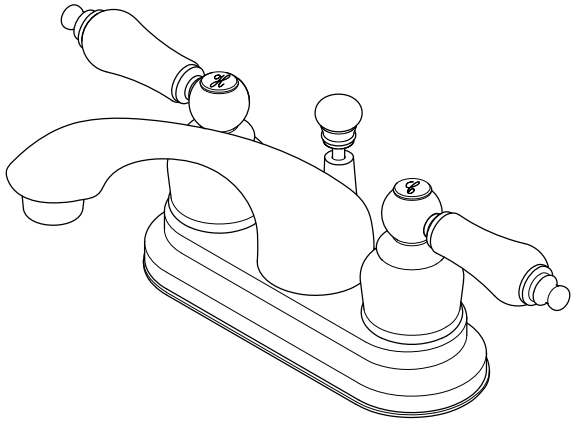

CARE AND MAINTENANCE OF YOUR FAUCET

Your KINGSTON faucet has been finished to the most strict standards; however, due to the high content of minerals in the water, your finish may appear dull and tarnished after time. These are some do's and don'ts to maintain the luster on your faucet for many years to come.

DO
1. Use a silicone based caulking when installing.
2. Clean your faucet with only a mild soap and water solution.
3. Dry your faucet after using it.
4. Give it a coat of Carnauba Wax periodically.

DON'T
1. Use plumbers putty when installing the faucet.
2. Use any abrasive cleaning agents.

It may seem like a very simple and short list but it is that simple to maintain your faucet, looking shiny and new.

If your faucet is already looking somewhat dull and tarnished, before replacing it, try cleaning it with a 50/50 solution of vinegar and water, you may need to soak some rags and wrap around those stubborn areas, leave
overnight and rinse completely in the morning, apply Carnauba wax once you have removed the mineral deposits.

Parts:

Lock Nut	Cone Washer & Coupling Nut	Pop-Up
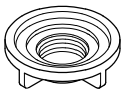	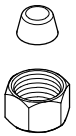	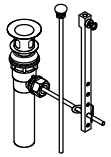
2 Pcs	2 Pcs	1 Pc

www.kingstonbrass.com

TOLL-FREE CUSTOMER SERVICE: 1-877-2-KBRASS
TECHNICAL SUPPORT E-mail: service@kingstonbrass.com
12775 Reservoir Street, Chino, CA 91710

NOTICE

Failure to follow all directions may cause leaks which may result in water damage

KINGSTON

INSTALLATION INSTRUCTIONS
Twin Handles Lavatory Faucet with or without Pop-Up

BEFORE BEGINNING INSTALLATION:

1. Flush plumbing lines to clear any debris.
2. Shut off both supply lines after flushing.

Need Tools:



Basin Wrench | Adjustable Wrench | Teflon Tape | Silicone Sealant | Screwdriver

1

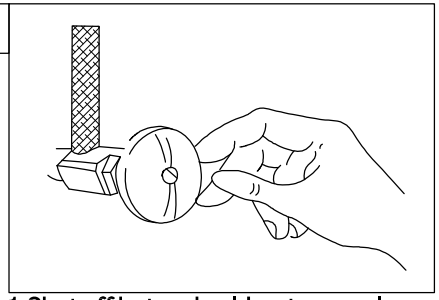

1. Shut off hot and cold water supply under sink. Plug sink drain with cloth to avoid losing small parts. Remove old faucet.

2

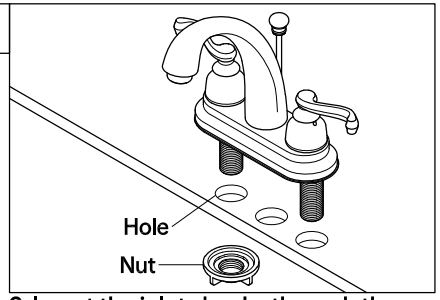

2. Insert the inlet shanks through the sink holes, and press down. Assemble the washers and lock nuts on the inlet shanks, and then tighten the nuts by hand.

3

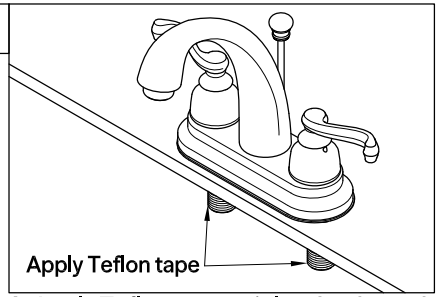

3. Apply Teflon tape to inlet shanks and connect supply lines.

4

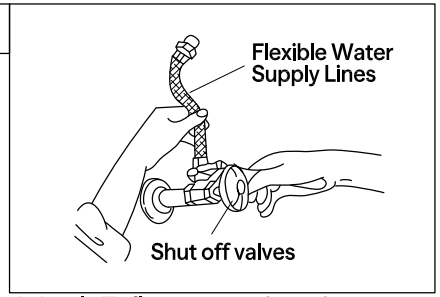

4. Apply Teflon tape to threads on faucet shank and shut off valves, connect water supply line.

5

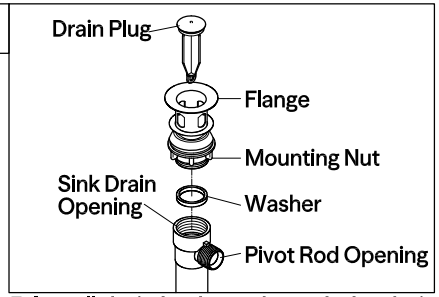

5. Install drain body up through the drain opening and reattach the flange onto drain body, holding the drain body in position with pivot rod opening facing the back of sink. Tighten the mounting nut by hand.

6

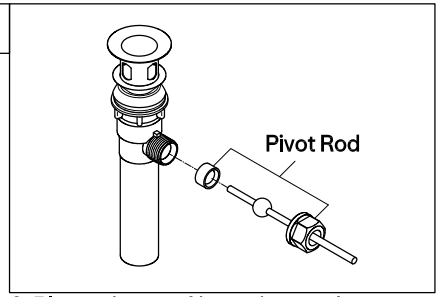

6. Place pivot rod into pivot rod opening. Slide pivot nut over pivot rod and thread it on the drain body. Tighten firmly.

7

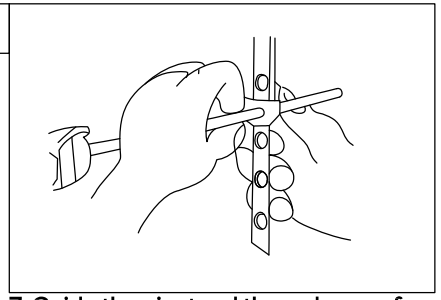

7. Guide the pivot rod through one of the holes on the lift rod strap and secure it with the spring clip. Then adjust the height of the lift rod by resetting the clevis screw.

8

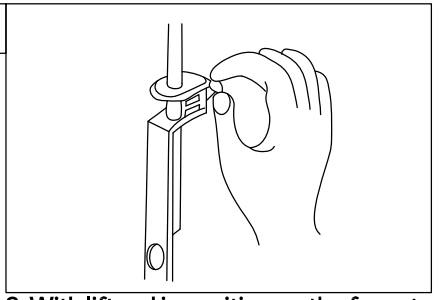

8. With lift rod in position on the faucet, insert lift rod through lift rod strap and secure with the clevis screw.

9

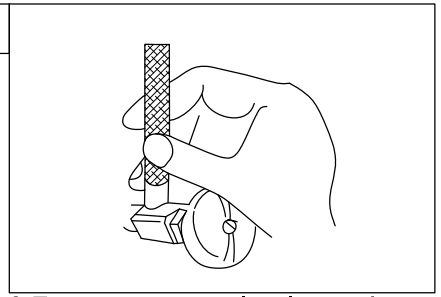

9. Turn on water supply valves and check for leaks, especially all supply line connections.

10

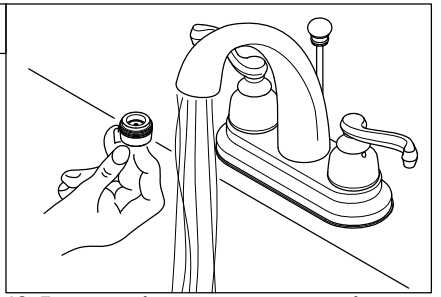

10. Remove the aerator, turn on the faucet, let water run for at least one minute, this will clear any debris left in the line, reinstall aerator.

Warning!!!

- Do not over-tighten nut during installation.
- Over-tighten may crack the valve and cause severe leak.

©2025 LVC Kingston LLC. All Rights Reserved.
2026-07-G