SKU: CD008-150WH-USZX

COMPACT DRYER

Instruction Manual

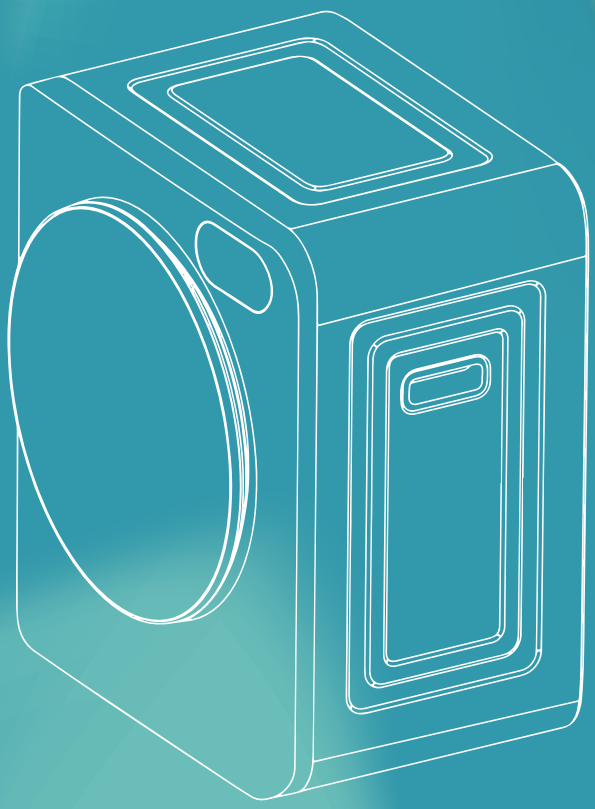

Congratulations on purchasing your new product. To ensure proper operation, please read this instruction manual carefully before using this product. Keep this manual in a safe place for future reference.

Email:
support@homyd.com
Tel: 1-833-632-0897
Working hours: Mons to Fris, 8 AM - 4 PM (PT)

Congratulations

Dear Customer:

Welcome to the our family. Thank you for purchasing one of our products.

Our goal is to provide you with superior service. If there is anything missing from or wrong with your order, or if you have any questions about using our product, PLEASE contact us.

Email: support@homyd.com
Tel: 1-833-632-0897
Working hours: Mons to Fris, 8 AM - 4 PM (PT)

Our team is available 24/7 to address your questions, comments, and concerns. Your satisfaction is our ultimate goal. We want to make everything right so you'll share your positive experience with other shoppers on Amazon .

If you experience any problems, please send an email to support@homyd.com.
Tel: 1-833-632-0897 Working hours: Mons to Fris, 8 AM - 4 PM (PT)

Our mission:
* To be the most trusted appliance brand.
* To create practical, compact appliances that better your life.

TABLE OF CONTENTS

TABLE OF CONTENTS	01
SAFETY PRECAUTIONS	02-03
WARNING	04
INSTALLATION	05-06
MAINTENANCE	07-08
SETUP & USE	09-11
TROUBLESHOOTING	12
WARRANTY AND SERVICE	13

Safety Instructions

I. Electrical Safety

1. The grounding wire of the socket must be reliably grounded. It is bestto use a leakage protector.
2. During the operation of the clothes dryer, please do not put flammable volatile substances (such as gasoline, alcohol) near the clothes dryer to avoid fire.
3. Do not install the clothes dryer in wet places such as bathrooms or where it is likely to be wet by rain, so as to avoid electric shock,leakage and other accidents
4. When the clothes dryer is in normal use, the power cord plug should be easy to plug and unplug. When there is a power outage, movement, disuse or cleanirg, be sure to unplug the power cord plug. Please do not plug or pull the plug with wet hands.
5. If the power cord is damaged, it must be replaced by a professional from the manufacturer, other maintenance department, or similar department in order to avoid danger.
6. It is strictly forbidden to put the clothes dryer on the packaging foamwork, otherwise it will cause fire due to the heat is not easy to emit or other ernal factors
7. When the inside of the drum or the outside of the dryer is dirty, wipe a soft wet towel, do not rinse directly with water, and do not wipe with volatile subtances (such as alcohol,gasoline,etc.).
8. If chemicals are used to clean clothes,drum dryers cannot be used.
9. Cotton shavings are not allowed to accumulate around the drum dryer.
10. Adequate ventilation must be provided to prevent gas from the applianc entering the space to ignite other substances, including open fires.
11. Exhaust is not allowed in the flue of appliances for burning gas or other materi-als.

Ⅱ. Using Requirements

1. Clothes can be dried in a dryer after they are fully dehydrated. Clothes wrung by hand should be avoided due to the existence of a large amount of water,the ppossi-bility of leakage and the increase of drying time.
2. Before drying, please check your clothes carefully and take out the lighters and sharp metal objects such as coins, hairpins and paper clip keys in your pocket
3. Zippers, and buttons should be fastened and clothes should be turned over from the inside to dry. (this reduces the sound of colliding with the drum).
4. The label reads "dry cleaning" or "clothes that cannot be washed with water cannot be dried by a clothes dryer.
5. Woolen fabrics, wool clothes, leather materials should not be used in ts dryer plush, leather will be damaged, wool clothing will shrink and deform.
6. After use, the thread shavings on the air inlet filter screen and the aoutlet filter cotton must be cleaned.
7. It is best to dry clothes of the same or similar texture at one time.
8. Do not dry clothes that have the following requirements: do not dry with drum dryer, hang to dry,drip dry,spread evenly to dry noise,dry in the shade.

I Warning

Oil-affected items can ignite spontaneously, especially when exposed to heat sources such as in a tumble dryer. The items become warm, causing an oxidation reaction in the oil. This oxidation creates heat, and if the heat cannot escape, the items can become hot enough to catch fire. Piling, stacking or storing oil-affected items can prevent heat from escaping and become a fire hazard.

- If it is unavoidable that fabrics containing vegetable or cooking oil, or items that have been contaminated by haircare products are placed in a tumble dryer, they should first be washed in hot water with extra detergent. This will reduce, but not eliminate, the hazard.
- Do not dry unwashed items in the tumble dryer.
- Items that have been soiled with substances such as cooking oil, acetone, alcohol, petrol, kerosene, spot removers, turpentine, waxes and wax removers should be washed in hot water with an extra amount of detergent before being dried in the tumble dryer.
- Fabric softeners, or similar products, should be used as specified by the fabric softener instructions.
- The final part of a tumble dryer cycle occurs without heat (cool down cycle) to ensure that the items are left at a temperature that won't damage the items.
- WARNING: Never stop a tumble dryer in the process of the drying cycle unless all the items are quickly removed and spread out so that the heat is dissipated.

Caution, danger

This dryer cannot be used upside down

WARNING

Fire Hazard

Installation of the clothes dryer must be performed by a qualified installer.

Install clothes dryer according to the manufacturer's instructions and local codes.

Do not install a clothes dryer with flexible plastic venting materials. If flexible metal (foil type) duct is installed, it must be of a specific type identified by the appliance manufacturer as suitable for use with clothes dryers. Flexible venting materials are known to collapse, be easily crushed, and trap lint. These conditions will obstruct the clothes dryer's airflow and increase the risk of fire.

To reduce the risk of severe injury or death, follow all the installation instructions.

Connect to Individual Branch Circuit.

This appliance must be grounded. In the event of malfunction or breakdown, grounding will reduce the risk of electric shock by providing a path of least resistance for the electric current. This appliance is equipped with a cord having an equipment-grounding conductor and grounded in accordance with all local codes and ordinances.

WARNING

Improper connection of the equipment-grounding conductor may cause electric shock. Check with a qualified electrician or service representative if you are not sure as to whether the appliance is properly grounded. Do not modify the plug provided with the appliance: if it does not fit the outlet, have a proper outlet installed by a qualified electrician.

Appliance must be placed on a steady, flat surface. Do not place the dryer on carpet as this will block the intake. There should be at least 10cm between the dryer and the walls.

I Installation

The clothes dryer should be placed on a horizontal and solidfloor, desktop or special bracket. The dryer should be installed 4-6inch away from the back wall. If used in a narrow space, a ventilator can be installedor an exhaust pipe can be installed at the air outlet to vent hot and humid air outside. The length of the exhaust pipe should not exceed 6.6ft

1. Installation of exhaust pipe joint.

Adjust the outlet-joint direction according to the actual needs

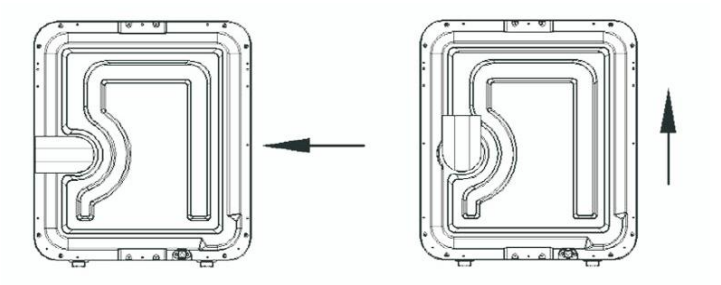

2. Horizontal installation of clothes dryer.

This clothes dryer is not allowed to stand upside down. When the clothes dryer is placed on the horizontal ground and desktop, make sure that the floor and desktop are firm and not tilted, so Athat the clothes dryer is horizontal.

3. Optional installation mode.

3.1 Installation of clothes dryer bracket
When the clothes dryer is installed on the bracket, it is necessary to ensure that the bracket is firm and reliable, and when the bracket is installed on the ground, it must be stable and reliable, and there is a strong connection between the bracket and the wall to ensure that the bracket is stable, and there should be at least a 5 inches distance between thebracket and the wall (the bracket is non-standard accessories).

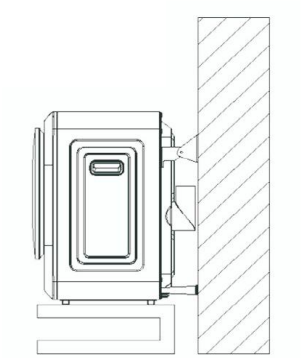

3.2 Wall installation of clothes dryer

Determine the wall position of the dryer and note that the distance between the top of the dryer and the ceiling is recommended to be greater than 4inch . If the installation location is above the washing machine,leatve enough space to open the washer cover.

1) Install the wall mount bracket (product) on the product. The screw holes for the wall mount bracket (product) are on the inside. Reference Figure ①

2) Drill holes in the wall and install the wall mount bracket (wall) on the wall with anchor plug and expansion bolts.Reference Figure ②

3) Remove the screws on the lower left and lower right corners of the back of the dryer, insert the wall-mounted column, and install the wall-mounted column on the dryer (the hole is where the screws are removed). Reference Figure ③

4) Hang the wall-mounted accessories (products) on the wall-mounted accessories (walls)

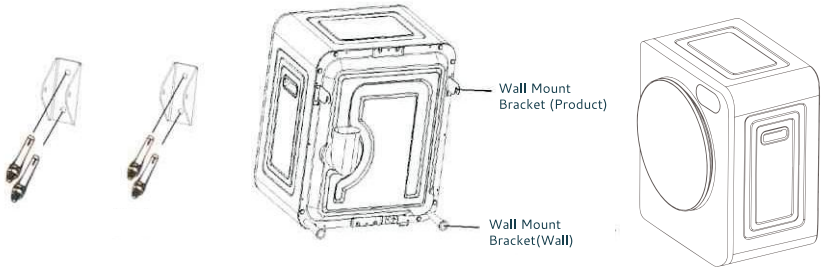

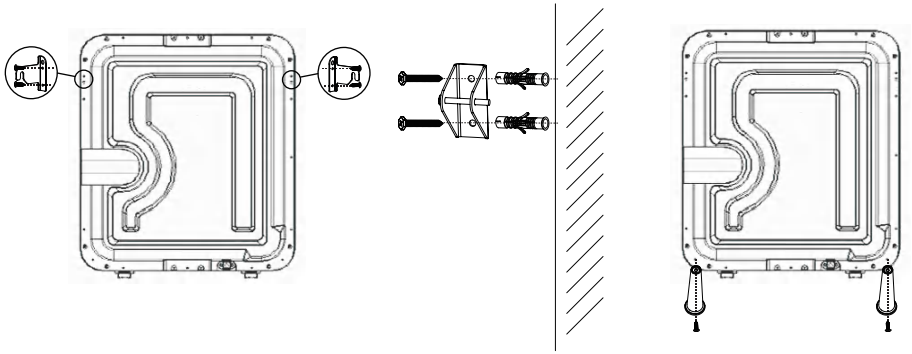

① ② ③

I Maintenance

In order to ensure the normal use of the clothes dryer, the air outlet and air inlet filter should be cleaned in time, and the body should be cleanedregularly. Please unplug the power plug from the socket before cleaning.

1. Cleaning of outlet filter

The outlet filter needs to be cleaned after each use.

b. Clean the thread shavings: remove the air outlet cover, filter cotton and filter screen respectively, use a soft brush or vacuum cleaner to clean the filter screen and filter cotton, be careful not to damage the filter.

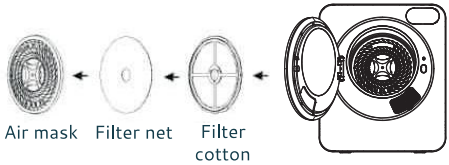

c. Install the filter: After cleaning, assemble the filter according to the order of filter, filter cotton, and air outlet cover, put the filter into the inner cylinder, and align the central concave of the air outlet mask with the convex part of the center of the drum to make sure it is installed in place.

Air mask Filter net Filter cotton

2. Air inlet filter

1) Push the outer middle end of the air inlet filter cover slightly upward, hold it and remove it outward.
2) Use a soft brush or vacuum cleaner to clean up the dust attached to it. It is recommended to clean up once a month.
3) Put it back on the machine after cleaning.

3. Machine cleanliness

Wipe the dirt inside the drum or on the outside of the dryer with a wet soft cloth. If the dirt is difficult to remove, wipe it with a little kitchen cleaner, and then wipe it with a clean cloth.

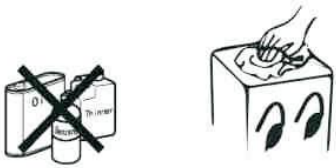

Do not wipe the body with diluent, gasoline or alcohol.

Attention:

Thank you for reading the operation manual carefully, but you also need to pay attention to the following two usage guidelines:

UV:

After starting the UV function, the function will operate according to the actual internal situation, and play a good sterilization effect

Warning: Do not operate the function again after starting the UV function. Excessive UV will damage the color fastness of the textile and the material of the fabric.

Key Features

With humidity and temperature automatic control function, thisseries of drum clothes dryer can effectively improve the efficiency of clothes drying, and at the same time improve the fluffiness and softness of clothes,making clothes as beautiful as new and gentle as before.

1. The operation is simple. One-touch start.
2. Convenient use, automatic sensing,labor-saving.
3.Easy installation, and a variety of collocation.
4. Clear and multiple programs.

Appearance

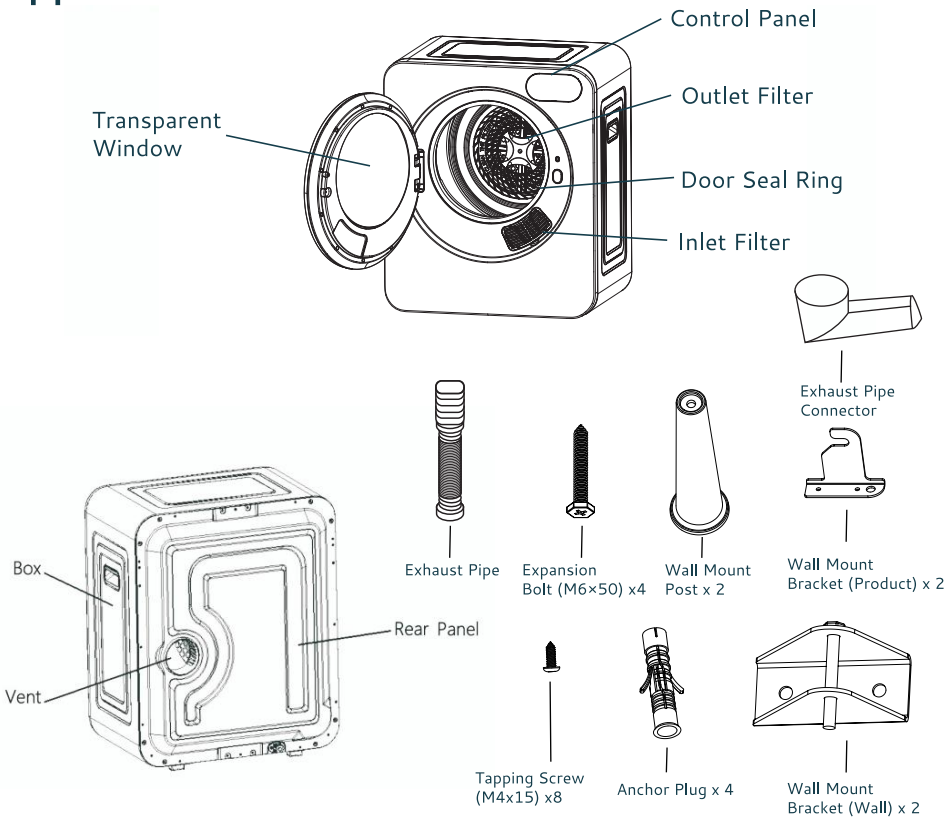

Control Panel Functions

Smart Mode

Freshness

Quick Drying

Cashmere

Child Safety Lock

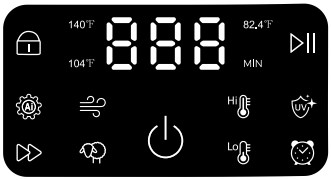

Power on/off

High Temperature

Low temperature

Sterilizing

Timing

Start/Pause

/ High temperature mode: Suitable for large-sized clothes or multiple pieces of clothes
Low temperature mode: Suitable for several pieces of clothes

The "Power" button is pressed to turn on the power, and then the display will appear. The power button is turned off and then the display will turn off.

After the "Start" button is pressed, the dryer will start to work immediately. After the "Pause" button is pressed, the dryer will stop to work after 2 seconds.

Smart mode: The dryer starts in the smart high temperature mode by default, which is suitable for more clothes or large clothes

Freshness mode: Removes odors from clothes, such as the odors caused by clothes being placed in the closet for a long time. Options: 30/35/40 minutes

Quick drying mode: Suitable for quickly drying small clothes. Options: 20/30/40 minutes

Suitable for cashmere clothes

Timing: Set the required drying time according to your needs. Click the function button, and when the light turns blue, you can set the time. Options: 30/60/90/120/150/180/210/240.

Keep pressing the sterilization button for 3 seconds. When the indicator light turns blue, it means that the mode has been activated. Options: 30/40/50/60 minutes. This mode can also be activated after starting the dryer.

Fault alarm processing

Fault display	Fault cause	Fault phenomenon	Trouble shooting
Door open alarm	Door opening after the program starts	El indicator light flashes	Close the machine door
Overheat alarm	The temperature in the bucket is higher than 158℉	E2 indicator light flashes	Shut off the engine and cool down.
Temperature sensor fault	Circuit failure	E3 indicator light flashes	Replace the temperature sensor
Communication fault	The circuit or connector is faulty	E4 indicator light flashes	Detection connector

Troubleshooting

Abnormal phenomenon	Cause of exception	Process method
The dryer doesn't start	-Power failure or tripping -The power connection is tight and secure -Whether the drying clothes are overloaded -Whether the temperature controller is disconnected	- Use after power is recovered - Check the power connection to ensure that it is securely fastened - The clothes must be dehydrated, please dry the clothes in batches - Ask maintenance personnel to replace the temperature controller
Clothes cannot be dried	-Too full laundry in the machine -The filter is blocked, affecting the inlet and outlet air -Too full laundry entwined -The machine is installed in a narrow and unventilated position	-Dry clothes multiple times -Clean the inlet and outlet air filter regularly -Shake and dry clothes again -Rearrange the machine
Clothes are too wrinkled	-Too full laundry in the machine -The clothes were not taken out in time after the end -Clothing not properly sorted -Temperature is too high	-Don't overfill the machine -Take out the clothes immediately after finishing -Dry clothes after sorting -Follow the maintenance instructions on the clothing label
Garment shrinkage	Excessive dry.	-Soften the fibers with fabric softener or turn the inside out to reduce friction
The clothes are hairy	It is normal for synthetic fibers and non-ironing fibers to produce hairball which is caused by normal friction	- Follow the maintenance label instructions on the garment. If the garment is prone to shrinkage, it should be taken out while the garment is still damp

SKU	CD008-150WH-USZX		
Model	ASMNS205CWE		
External Dimension	22.1(H) x 18.9(W) x 15.8(D)	Product Weight	34.17 lbs
Rated Input Power	850 w	Rated Drying Capacity	9 lbs
Rated Voltage	120V~	Rated Frequency	60Hz

NOTE: Consistent with our continuing product development policy. improvements may have been made which render the contents of this package slightly different to that shown.

I Warranty and Service

We offers a limited 1-year warranty ("warranty period") on all of our products purchased new and unusedfrom us with an original proof of purchase and where a defect has arisen, wholly or substantially, as aresult of faulty manufacture, parts, or workmanship during the warranty period. The warranty does notapply where damage is caused by other factors, including without lirmitation:
(a) normal wear and tear;
(b) abuse, mishandling, accident, or failure to follow operating instructions;
(c) exposure to liquid or infiltration of foreign particles;
(d) servicing or modifications of the product other than by our company;

Our warranty covers all costs related to restoring the proven defective product through repair or
replacement of any defective part and necessary labor so that it conforms to its original specifications.Areplacement product may be provided instead of repairing a defective product. Our sole obligation underthis warranty is limited to such repair or replacement. A receipt indicating the purchase date is required forany claim, so please keep all receipts in a safe place. Although greatly appreciated, the product registrationis not required to activate any warranty, and product registration does not eliminate the need for the
original proof of purchase.The warranty will be voided if repairs are performed by a non-authorized thirdparty and/or if spare parts other than those provided by the Company are used.You may also arrange forservice after the warranty expires,at an additional cost.These are our general terms for warranty service,but we always urge our customers to reach out to us with any issue, regardless of warranty terims. If youhave an issue with our products, please contact us (support@homyd.com), and we will do our best toresolve it for you.

Email: support@homyd.com
Tel: 1-833-632-0897
Working hours: Mons to Fris,8 AM -4 PM(PT)