PORTER CABLE®

20VMax* Lithium 6-1/2 inch (165mm) Circular Saw



*Maximum initial battery pack voltage (measured without a workload) is 20 volts. The nominal voltage is 18.

Instruction manual

CATALOG NUMBER

PCC660

SAFETY GUIDELINES - DEFINITIONS

It is important for you to read and understand this manual. The information it contains relates to protecting YOUR SAFETY and PREVENTING PROBLEMS. The symbols below are used to help you recognize this information.

⚠ **DANGER:** Indicates an imminently hazardous situation which, if not avoided, will result in death or serious injury.

⚠ **WARNING:** Indicates a potentially hazardous situation which, if not avoided, could result in death or serious injury.

⚠ **CAUTION:** Indicates a potentially hazardous situation which, if not avoided, may result in minor or moderate injury.

NOTICE: Used without the safety alert symbol indicates potentially hazardous situation which, if not avoided, may result in property damage.

General Safety Rules

⚠**WARNING: Read all safety warnings and all instructions.** *Failure to follow the warnings and instructions may result in electric shock, fire and/or serious injury.*

SAVE ALL WARNINGS AND INSTRUCTIONS FOR FUTURE REFERENCE

The term "power tool" in the warnings refers to your mains-operated (corded) power tool or battery-operated (cordless) power tool.

1) WORK AREA SAFETY

- **a) Keep work area clean and well lit**. *Cluttered or dark areas invite accidents.*
- **b) Do not operate power tools in explosive atmospheres, such as in the presence of flammable liquids, gases or dust.** *Power tools create sparks which may ignite the dust or fumes*.
- **c) Keep children and bystanders away while operating a power tool.** *Distractions can cause you to lose control.*

2) ELECTRICAL SAFETY

- **a) Power tool plugs must match the outlet. Never modify the plug in any way. Do not use any adapter plugs with earthed (grounded) power tools.** *Unmodified plugs and matching outlets will reduce risk of electric shock.*
- **b) Avoid body contact with earthed or grounded surfaces such as pipes, radiators, ranges and refrigerators.** *There is an increased risk of electric shock if your body is earthed or grounded.*
- **c) Do not expose power tools to rain or wet conditions**. *Water entering a power tool will increase the risk of electric shock.*
- **d) Do not abuse the cord. Never use the cord for carrying, pulling or unplugging the power tool. Keep cord away from heat, oil, sharp edges or moving parts.** *Damaged or entangled cords increase the risk of electric shock.*
- **e) When operating a power tool outdoors, use an extension cord suitable for outdoor use.** *Use of a cord suitable for outdoor use reduces the risk of electric shock.*
- **f) If operating a power tool in a damp location is unavoidable, use a ground fault circuit interrupter (GFCI) protected supply.** *Use of a GFCI reduces the risk of electric shock.*

3) PERSONAL SAFETY

- **a) Stay alert, watch what you are doing and use common sense when operating a power tool. Do not use a power tool while you are tired or under the influence of drugs, alcohol or medication.** *A moment of inattention while operating power tools may result in serious personal injury.*
- **b) Use personal protective equipment. Always wear eye protection.** *Protective equipment such as dust mask, nonskid safety shoes, hard hat, or hearing protection used for appropriate conditions will reduce personal* injuries.
- **c) Prevent unintentional starting. Ensure the switch is in the off position before connecting to power source and/ or battery pack, picking up or carrying the tool.** *Carrying power tools with your finger on the switch or energizing power tools that have the switch on invites accidents.*

d) Remove any adjusting key or wrench before turning the power tool on. *A wrench or a key left attached to a rotating part of the power tool may result in personal injury.*

e) Do not overreach. Keep proper footing and balance at all times. *This enables better control of the power tool in unexpected situations.*

f) Dress properly. Do not wear loose clothing or jewelry. Keep your hair, clothing and gloves away from moving parts. *Loose clothes, jewelry or long hair can be caught in moving parts.*

g) If devices are provided for the connection of dust extraction and collection facilities, ensure these are connected and properly used. *Use of dust collection can reduce dust-related hazards.*

4) POWER TOOL USE AND CARE

a) Do not force the power tool. Use the correct power tool for your application. *The correct power tool will do the job better and safer at the rate for which it was designed.*

b) Do not use the power tool if the switch does not turn it on and off. *Any power tool that cannot be controlled with the switch is dangerous and must be repaired*.

c) Disconnect the plug from the power source and/or the battery pack from the power tool before making any adjustments, changing accessories, or storing power tools. *Such preventive safety measures reduce the risk of starting the power tool accidentally.*

d) Store idle power tools out of the reach of children and do not allow persons unfamiliar with the power tool or these instructions to operate the power tool. *Power tools are dangerous in the hands of untrained users.*

e) Maintain power tools. Check for misalignment or binding of moving parts, breakage of parts and any other condition that may affect the power tool's operation. If damaged, have the power tool repaired before use. *Many accidents are caused by poorly maintained power tools.*

f) Keep cutting tools sharp and clean. *Properly maintained cutting tools with sharp cutting edges are less likely to bind and are easier to control.*

g) Use the power tool, accessories and tool bits, etc. in accordance with these instructions, taking into account the working conditions and the work to be performed. *Use of the power tool for operations different from those intended could result in a hazardous situation.*

5) BATTERY TOOL USE AND CARE

a) Recharge only with the charger specified by the manufacturer. *A charger that is suitable for one type of battery pack may create a risk of fire when used with another battery pack.*

b) Use power tools only with specifically designated battery packs. *Use of any other battery packs may create a risk of injury and fire.*

c) When battery pack is not in use, keep it away from other metal objects like paper clips, coins, keys, nails, screws, or other small metal objects that can make a connection from one terminal to another. *Shorting the battery terminals together may cause burns or a fire.*

d) Under abusive conditions, liquid may be ejected from the battery, avoid contact. If contact accidentally occurs, flush with water. If liquid contacts eyes, additionally seek medical help. *Liquid ejected from the battery may cause irritation or burns.*

6) SERVICE

a) Have your power tool serviced by a qualified repair person using only identical replacement parts. *This will ensure that the safety of the power tool is maintained.*

SAFETY INSTRUCTIONS FOR ALL SAWS CUTTING PROCEDURES

a) ⚠**DANGER: Keep hands away from cutting area and the blade. Keep your second hand on auxiliary handle or motor housing.** *If both hands are holding the saw, they cannot be cut by the blade.*

b) **Do not reach underneath the workpiece.** *The guard cannot protect you from the blade below the workpiece.*

c) **Adjust the cutting depth to the thickness of the workpiece.** *Less than a full tooth of the blade teeth should be visible below the workpiece.*

d) **Never hold piece being cut in your hands or across your leg. Secure the workpiece to a stable platform.** *It is important to support the work properly to*

minimize body exposure, blade binding, or loss of control.
e) **Hold the power tool by insulated gripping surfaces only, when performing an operation where the cutting tool may contact hidden wiring.** *Contact with a "live" wire will also make exposed metal parts of the power tool "live" and could give the operator an electric shock.*
f) **When ripping always use a rip fence or straight edge guide.** *This improves the accuracy of cut and reduces the chance of blade binding.*
g) **Always use blades with correct size and shape (diamond versus round) of arbour holes.** *Blades that do not match the mounting hardware of the saw will run eccentrically, causing loss of control.*
h) **Never use damaged or incorrect blade washers or bolt**. *The blade washers and bolt were specially designed for your saw, for optimum performance and safety of operation.*

KICKBACK CAUSES AND RELATED WARNINGS

• Kickback is a sudden reaction to a pinched, bound or misaligned saw blade, causing an uncontrolled saw to lift up and out of the workpiece toward the operator.
• When the blade is pinched or bound tightly by the kerf closing down, the blade stalls and the motor reaction drives the unit rapidly back toward the operator.
• If the blade becomes twisted or misaligned in the cut, the teeth at the back edge of the blade can dig into the top surface of the wood causing the blade to climb out of the kerf and jump back toward the operator.
Kickback is the result of saw misuse and/or incorrect operating procedures or conditions and can be avoided by taking proper precautions as given below:
a) **Maintain a firm grip with both hands on the saw and position your arms to resist kickback forces. Position your body to either side of the blade, but not in line with the blade.** *Kickback could cause the saw to jump backwards, but kickback forces can be controlled by the operator, if proper precautions are taken.*
b) **When blade is binding, or when interrupting a cut for any reason, release the trigger and hold the saw motionless in the material until the blade comes to a complete stop. Never attempt to remove the saw from the work or pull the saw backward while the blade is in motion or kickback may occur.** *Investigate and take corrective actions to eliminate the cause of blade binding.*
c) **When restarting a saw in the workpiece, center the saw blade in the kerf and check that saw teeth are not engaged into the material.** *If saw blade is binding, it may walk up or kickback from the workpiece as the saw is restarted.*
d) **Support large panels to minimize the risk of blade pinching and kickback**. *Large panels tend to sag under their own weight. Supports must be placed under the panel on both sides, near the line of cut and near the edge of the panel.*
e) **Do not use dull or damaged blades.** *Unsharpened or improperly set blades produce narrow kerf causing excessive friction, blade binding and kickback.*
f) **Blade depth and bevel adjusting locking knobs must be tight and secure before making cut**. *If blade adjustment shifts while cutting, it may cause binding and kickback.*
g) **Use extra caution when sawing into existing walls or other blind areas.** *The protruding blade may cut objects that can cause kickback.*

LOWER GUARD FUNCTION

a) **Check lower guard for proper closing before each use. Do not operate the saw if lower guard does not move freely and close instantly. Never clamp or tie the lower guard into the open position.** *If saw is accidentally dropped, lower guard may be bent. Raise the lower guard with the retracting handle and make sure it moves freely and does not touch the blade or any other part, in all angles and depths of cut.*
b) **Check the operation of the lower guard spring. If the guard and the spring are not operating properly, they must be serviced before use.** *Lower guard may operate sluggishly due to damaged parts, gummy deposits, or a buildup of debris.*
c) **Lower guard should be retracted manually only for special cuts such as "plunge cuts" and "compound cuts."** *Raise lower guard by retracting handle and as soon as blade enters the material, the lower guard must be released. For all other sawing, the lower guard should operate automatically.*
d) **Always observe that the lower guard is covering the blade before placing saw down on bench or floor.** *An unprotected, coasting blade will cause the saw to walk backwards, cutting whatever is in its path. Be aware of the time it takes for the blade to stop after switch is released.*

ADDITIONAL SAFETY INSTRUCTIONS

• **Use clamps or another practical way to secure and support the workpiece to a stable platform.** Holding the work by hand or against your body leaves it unstable and may lead to loss of control.
• **Keep your body positioned to either side of the blade, but not in line with the saw blade.** *KICKBACK could cause the saw to jump backwards (see* **Causes and Operator Prevention of Kickback and KICKBACK)**.
• **Avoid cutting nails. Inspect for and remove all nails from lumber before cutting.**
• **Always make sure nothing interferes with the movement of the lower blade guard.**
• **Accessories must be rated for at least the speed recommended on the tool warning label.** *Wheels and other accessories running over rated speed can fly apart and cause injury. Accessory ratings must always be above tool speed as shown on tool nameplate.*
• *Always make sure the saw is clean before using.*
• *Stop using this saw and have it properly serviced if any unusual noise or abnormal operation occurs.*
• *Always be sure all components are mounted properly and securely before using tool.*
• *Always handle the saw blade with care when mounting or removing it or when removing the diamond knockout.*
• *Always wait until the motor has reached full speed before starting a cut.*
• *Always keep handles dry, clean and free of oil and grease. Hold the tool firmly with both hands when in use.*
• *Always be alert at all times, especially during repetitive, monotonous operations.*
• *Always be sure of position of your hands relative to the blade.*
• *Stay clear of end pieces that may fall after cutting off. They may be hot, sharp and/or heavy. Serious personal injury may result.*
• *Replace or repair damaged cords. Make sure your extension cord is in good condition. Use only 3-wire extension cords that have 3-prong grounding-type plugs and 3-pole receptacles that accept the tool's plug*.
• **An extension cord must have adequate wire size (AWG or American Wire Gauge) for safety.** The smaller the gauge number of the wire, the greater the capacity of the cable, that is 16 gauge has more capacity than 18 gauge. An undersized cord will cause a drop in line voltage resulting in loss of power and overheating. When using more than one extension to make up the total length, be sure each individual extension contains at least the minimum wire size. The following table shows the correct size to use depending on cord length and nameplate ampere rating. If in doubt, use the next heavier gauge. The smaller the gauge number, the heavier the cord.

Recommended Minimum Wire Size for Extension Cords

Total Length of Cord						
25 ft.	50 ft.	75 ft.	100 ft.	125 ft.	150 ft.	175 ft.
7.6 m	15.2 m	22.9 m	30.5 m	38.1 m	45.7 m	53.3 m
Wire Size AWG						
18	18	16	16	14	14	12

⚠**WARNING:** *Blades coast after turn off. Serious personal injury may result.*

⚠**WARNING:** **ALWAYS wear proper personal hearing protection that conforms to ANSI S12.6 (S3.19) during use.** *Under some conditions and duration of use, noise from this product may contribute to hearing loss.*

⚠**WARNING:** **ALWAYS use proper eye protection.** *All users and bystanders must wear proper eye protection that conforms to ANSI Z87.1.*

⚠**WARNING:** **ALWAYS USE SAFETY GLASSES.** *Everyday eyeglasses are NOT safety glasses. Also use face or dust mask if cutting operation is dusty.*
ALWAYS wear certified safety equipment:
• *ANSI Z87.1 eye protection (CAN/CSA Z94.3).*
• *ANSI S12.6 (S3.19) hearing protection.*
• *NIOSH/OSHA respiratory protection.*

⚠**WARNING:** *Some dust created by power sanding, sawing, grinding, drilling, and other construction activities contains chemicals known in the state of California to cause cancer, birth defects or other reproductive harm. Some examples of these chemicals are:*
• Lead from lead-based paints, crystalline silica from bricks and cement and other

masonry products, and arsenic and chromium from chemically-treated lumber (CCA). *Your risk from these exposures varies, depending on how often you do this type of work. To reduce your exposure to these chemicals: work in a well ventilated area, and work with approved safety equipment, such as those dust masks that are specially designed to filter out microscopic particles.*

• **Avoid prolonged contact with dust from power sanding, sawing, grinding, drilling, and other construction activities. Wear protective clothing and wash exposed areas with soap and water.** *Allowing dust to get into your mouth, eyes, or lay on the skin may promote absorption of harmful chemicals.*

⚠**WARNING:** *Use of this tool can generate and/or disburse dust, which may cause serious and permanent respiratory or other injury. Always use NIOSH/OSHA approved respiratory protection appropriate for the dust exposure. Direct particles away from face and body. Always operate tool in well-ventilated area and provide for proper dust removal. Use dust collection system wherever possible.*

Symbols

- *The label on your tool may include the following symbols. The symbols and their definitions are as follows:*

V.....volts	*A.....amperes*
Hz.....hertz	*W.....watts*
min.....minutes	*~ or AC.....alternating current*
⎓ or DC..direct current	*n_0.....no load speed*
Ⓘ.....Class I Construction (grounded)	*⏚.....earthing terminal*
⧈.....Class II Construction (double insulated)	*⚠.....safety alert symbol*
	.../min or rpm...revolutions or reciprocation per minute
.....Read instruction manual before use	*.....Use proper respiratory protection*
.....Use proper eye protection	*.....Use proper hearing protection*

TO REDUCE THE RISK OF KICKBACK

- Keep a firm grip on saw with both hands at all times.
- Stay alert – exercise control.
- Support long overhanging materials. As the material is cut and weakens, it will sag, causing a pinched blade.
- Support large panels as shown (**Fig. E**). Material supported only at the ends (**Fig. D**) will lead to blade pinching.
- Avoid sawing overhead. Material can sag and will pinch blade.
- Insure that the material to be cut is clamped (**figure G**) and solidly supported and balanced on a strong, stable and level work surface. Support the work so that the wide portion of the saw shoe is on the portion of the material that doesn't fall after the cut is made. Never hold cut off piece by hand (**figure F**)
- Keep blades sharp and clean.
- Use fence or straight edge guide when ripping. Be careful as the cut off strip can sag or twist, closing the cut and pinching the blade, leading to KICKBACK.
- Don't force tool. Wood variables such as knots, hardness, toughness, wetness, pressure treated and freshly cut green lumber can heavily load the saw which can lead to stalling. Push the saw slower when this occurs.
- Don't remove saw from work during a cut while the blade is moving.
- Allow saw to reach full speed before blade contacts material to be cut. Starting the saw with the blade against the work or pushed forward into cut can lead to stalling or sudden backward movement of saw.
- Never attempt to lift saw when making a bevel cut. This leads to blade binding and stalling.
- Always secure work to prevent workpiece movement during cut.
- Do not try to force saw back on line if your cut begins to go off line. This can cause KICKBACK. Stop saw and allow blade to coast down to a stop. Withdraw from cut and start a new cut on the line.
- Set depth adjustment of saw such that one tooth of the blade projects below the workpiece as shown in **(figure I).**
- Do not back up a rotating blade in the cut. Twisting the saw can cause the back edge of the blade to dig into the material, climb out of the work and run back toward the operator.
- Avoid cutting nails. Inspect for and remove all nails from lumber before cutting.

IMPORTANT SAFETY INSTRUCTIONS FOR BATTERY CHARGERS

SAVE THESE INSTRUCTIONS: This manual contains important safety instructions for battery chargers.

⚠ **WARNING:** Before using charger, read all instructions and cautionary markings on charger, battery pack, and product using battery pack.

- **Shock hazard.** Do not allow any liquid to get inside charger.
- **Burn hazard.** To reduce the risk of injury, charge only designated **PORTER-CABLE** batteries. Other types of batteries may burst causing personal injury and damage.
- Under certain conditions, with the charger plugged in to the power supply, the charger can be shorted by foreign material. Foreign materials of a conductive nature such as, but not limited to, steel wool, aluminum foil, or any buildup of metallic particles should be kept away from charger cavities. Always unplug the charger from the power supply when there is no battery pack in the cavity. Unplug charger before attempting to clean.
- **DO NOT attempt to charge the battery pack with any chargers other than the ones in this manual.** *The charger and battery pack are specifically designed to work together.*
- **These chargers are not intended for any uses other than charging designated *PORTER-CABLE* rechargeable batteries.** *Any other uses may result in risk of fire, electric shock or electrocution.*
- **Do not expose charger to rain or snow.**
- **Pull by plug rather than cord when disconnecting charger.** *This will reduce risk of damage to electric plug and cord.*
- **Make sure that cord is located so that it will not be stepped on, tripped over, or otherwise subjected to damage or stress.**
- **Do not use an extension cord unless it is absolutely necessary.** *Use of improper extension cord could result in risk of fire, electric shock, or electrocution.*
- **An extension cord must have adequate wire size (AWG or American Wire Gauge) for safety.** *The smaller the gauge number of the wire, the greater the capacity of the cable, that is 16 gauge has more capacity than 18 gauge. When using more than one extension to make up the total length, be sure each individual extension contains at least the minimum wire size.*
- **Do not place any object on top of charger or place the charger on a soft surface that might block the ventilation slots and result in excessive internal heat. Place the charger in a position away from any heat source.** *The charger is ventilated through slots in the top and the bottom of the housing.*
- **Do not operate charger with damaged cord or plug —** *have them replaced immediately.*
- **Do not operate charger if it has received a sharp blow, been dropped, or otherwise damaged in any way.** *Take it to an authorized service center.*
- **Do not disassemble charger;** *take it to an authorized service center when service or repair is required. Incorrect reassembly may result in a risk of electric shock, electrocution or fire.*
- **Disconnect the charger from the outlet before attempting any cleaning.** *This will reduce the risk of electric shock. Removing the battery pack will not reduce this risk.*
- **NEVER attempt to connect 2 chargers together.**
- **The charger is designed to operate on standard household electrical power (120 Volts). Do not attempt to use it on any other voltage.**

SAVE THESE INSTRUCTIONS

IMPORTANT SAFETY INSTRUCTIONS FOR BATTERY PACKS

⚠ **WARNING:** *For safe operation, read this manual and manuals originally supplied with tool before using the battery pack.*

The battery pack is not fully charged out of the carton. Before using the battery pack and charger, read the safety instructions below. Then follow charging procedures outlined.

READ ALL INSTRUCTIONS

- **Do not incinerate the battery pack even if it is severely damaged or is completely worn out.** *The battery pack can explode in a fire. Toxic fumes and materials are created when Li-Ion battery packs are burned.*
- **Do not charge or use battery in explosive atmospheres, such as in the presence of flammable liquids, gases or dust.** *Inserting or removing the battery from the charger may ignite the dust or fumes.*

- **If battery contents come into contact with the skin, immediately wash area with mild soap and water.** *If battery liquid gets into the eye, rinse water over the open eye for 15 minutes or until irritation ceases. If medical attention is needed, the battery electrolyte for Li-Ion batteries is composed of a mixture of liquid organic carbonates and lithium salts.*
- **Contents of opened battery cells may cause respiratory irritation.** *Provide fresh air. If symptoms persists, seek medical attention.*

⚠ **WARNING:** ***Burn hazard.*** *Battery liquid may be flammable if exposed to spark or flame.*

- *Charge the battery packs only in* **PORTER-CABLE** *chargers.*
- **DO NOT splash or immerse in water or other liquids.** *This may cause premature cell failure.*
- **Do not store or use the tool and battery pack in locations where the temperature may reach or exceed 105°F (40°C) (such as outside sheds or metal buildings in summer).**

⚠ **WARNING:** *Never attempt to open the battery pack for any reason. If battery pack case is cracked or damaged, do not insert into charger. Do not crush, drop or damage battery pack. Do not use a battery pack or charger that has received a sharp blow, been dropped, run over or damaged in any way (i.e., pierced with a nail, hit with a hammer, stepped on). Damaged battery packs should be returned to service center for recycling.*

⚠ **WARNING: Fire hazard. Do not store or carry battery so that metal objects can contact exposed battery terminals.** *For example, do not place battery in aprons, pockets, tool boxes, product kit boxes, drawers, etc., with loose nails, screws, keys, etc.* **Transporting batteries can possibly cause fires if the battery terminals inadvertently come in contact with conductive materials such as keys, coins, hand tools and the like.** *The US Department of Transportation Hazardous Material Regulations (HMR) actually prohibit transporting batteries in commerce or on airplanes (i.e., packed in suitcases and carry-on luggage) UNLESS they are properly protected from short circuits. So when transporting individual batteries, make sure that the battery terminals are protected and well insulated from materials that could contact them and cause a short circuit.* ***NOTE: Li-Ion batteries should not be put in checked baggage.***

Storage Recommendations

1. The best storage place is one that is cool and dry away from direct sunlight and excess heat or cold.
2. Long storage will not harm the battery pack or charger.

CHARGING PROCEDURE

PORTER-CABLE chargers are designed to charge **PORTER-CABLE** battery packs. Charge times are: PCC690L in 35-100 mins., PCC691L in 65-200 mins. and PCC695L in 160-300 mins. depending on the pack being charged.

1. Plug the charger into an appropriate outlet before inserting the battery pack.
2. Insert the battery pack into the charger.


3. The LED will flash indicating that the battery is being charged.


4. The completion of charge is indicated by the LED remaining on continuously. The pack is fully charged and may be used at this time or left on the charger.

Recharge discharged batteries as soon as possible after use or battery life may be greatly diminished. For longest battery life, do not discharge batteries fully. It is recommended that the batteries be recharged after each use.

Charger Diagnostics

This charger is designed to detect certain problems that can arise with the battery packs or the power source. Problems are indicated by one LED flashing in different patterns.

Bad Battery


The charger can detect a weak or damaged battery. The LED flashes in the pattern indicated on the label. If you see this bad battery blink pattern, do not continue to charge the battery. Return it to a service center or a collection site for recycling.

Hot/Cold Pack Delay


When the charger detects a battery that is excessively hot or excessively cold, it automatically starts a Hot/Cold Pack Delay, suspending charging until the battery has normalized. After this happens, the charger automatically switches to the Pack Charging mode. This feature ensures maximum battery life. The light flashes in the pattern indicated on the label.

Problem Power Line


When the charger is used with some portable power sources such as generators or sources that convert DC to AC, the charger may temporarily suspend operation. The

LED flashes in the pattern indicated on the label. This indicates that the power source is out of limits.

Leaving the Battery in the Charger

The charger and battery pack can be left connected with the LED glowing indefinitely. The charger will keep the battery pack fresh and fully charged. This charger features an automatic tune-up mode which equals or balances the individual cells in the battery pack to allow it to function at peak capacity. Battery packs should be tuned up weekly or whenever the battery no longer delivers the same amount of work. To use the automatic tune-up mode, place the battery pack in the charger and leave it for at least 8 hours.

Important Charging Notes

1. Longest life and best performance can be obtained if the battery pack is charged when the air temperature is between 65°F and 75°F (18°- 24°C). DO NOT charge the battery pack in an air temperature below +40°F (+4.5°C), or above +105°F (+40.5°C). This is important and will prevent serious damage to the battery pack.
2. The charger and battery pack may become warm to touch while charging. This is a normal condition, and does not indicate a problem. To facilitate the cooling of the battery pack after use, avoid placing the charger or battery pack in a warm environment such as in a metal shed, or an uninsulated trailer.
3. If the battery pack does not charge properly:
   a. Check current at receptacle by plugging in a lamp or other appliance
   b. Check to see if receptacle is connected to a light switch which turns power off when you turn out the lights.
   c. Move charger and battery pack to a location where the surrounding air temperature is approximately 65°F - 75°F (18°- 24°C).
   d. If charging problems persist, take the tool, battery pack and charger to your local service center.
4. The battery pack should be recharged when it fails to produce sufficient power on jobs which were easily done previously. DO NOT CONTINUE to use under these conditions. Follow the charging procedure. You may also charge a partially used pack whenever you desire with no adverse affect on the battery pack.

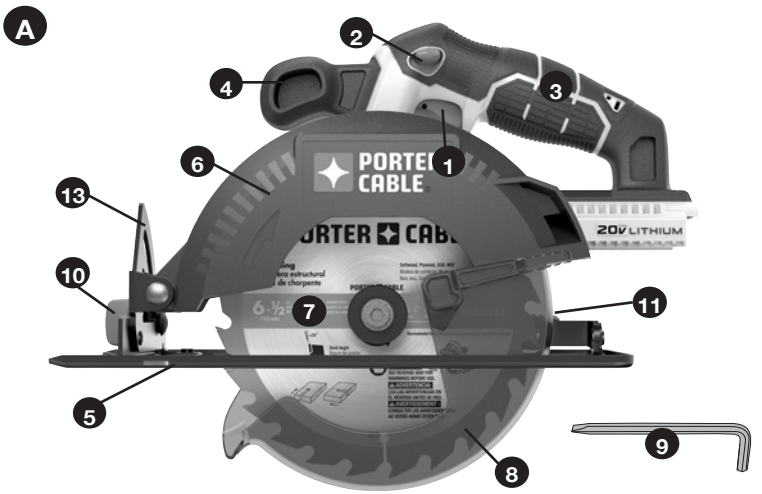

FUNCTIONAL DESCRIPTION

Figure A

1. On/off trigger
2. Lock-off button
3. Main handle
4. Secondary handle
5. Shoe
6. Upper guard
7. Saw blade
8. Lower blade guard
9. Wrench
10. Bevel adjustment knob
11. Depth adjustment knob (not shown)
12. Spindle lock (not shown)
13. Bevel adjustment scale

This product uses the batteries and chargers listed below.
20V Max* Lithium-Ion Batteries: PCC680L, PCC685L, PCC681L 20V Max* Lithium-Ion Chargers: PCC690L, PCC691L, PCC695L

OPERATING INSTRUCTIONS

INTENDED USE

This circular saw is design for do-it-yourself, wood-cutting applications.

⚠ **WARNING:** Do not cut any metals, masonry, glass, tile or plastic with this saw. A dull blade will cause slow, inefficient cutting overload on the saw motor, excessive splintering, and could increase the possibility of kickback.

- DO NOT use any abrasive wheels.
- Use only blades designed for wood cutting
- DO NOT use under wet conditions or in the presence of flammable liquids or gases.
- DO NOT let children come in contact with the tool.
- Supervision is required when inexperienced users operate the tool.

⚠ **WARNING:** Cutting sap coated wood, and other materials may cause melted substances to accumulate on the blade tips and the body of the saw blade, increasing the risk of the blade overheating and binding while cutting.

ASSEMBLY/ADJUSTMENT SET-UP

⚠ **WARNING:** **TO REDUCE THE RISK OF INJURY, ALWAYS REMOVE BATTERY FROM SAW BEFORE ANY OF THE FOLLOWING ADJUSTMENT OPERATIONS.**

INSTALLING AND REMOVING THE BATTERY PACK FROM THE TOOL

⚠ **WARNING:** ***Make certain the lock-off button is engaged to prevent switch actuation before removing or installing battery.***

TO INSTALL BATTERY PACK: Insert battery pack into tool as shown in **figure B**. Ensure battery pack is fully seated and fully latched into position.

TO REMOVE BATTERY PACK: Depress the battery release button as shown in **figure C** and pull battery pack out of tool.



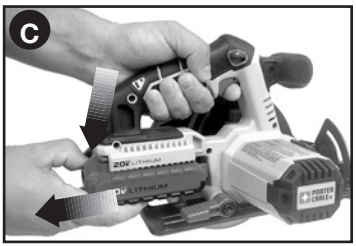

SUPPORTING LARGE PANELS / SECURING WORKPIECE

Support large panels to minimize the risk of blade pinching and kickback. Large panels tend to sag under their own weight as shown in **figure D**.

Supports must be placed under the panel on both sides, near the line of cut and near the edge of the panel (**figure E**).

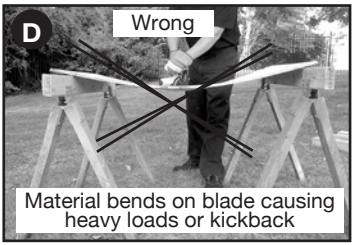



⚠ **WARNING:** TO REDUCE THE RISK OF INJURY
Never hold the piece being cut with your hands or lay it across your leg (**figure F**).

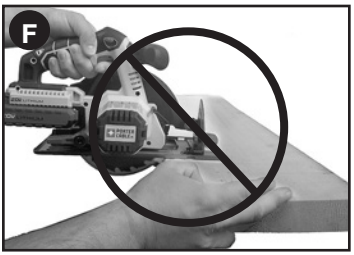

Secure the workpiece to a stable platform as shown in **figure G**. It is important to support the work properly to minimize body exposure, blade binding, or loss of control.



CUTTING DEPTH ADJUSTMENT - FIGURES H & I

The depth of cut should be set according to the thickness of the workpiece.

- Loosen the depth adjustment knob (11) to unlock the saw shoe (5) as shown in **figure H**.
- Move the saw shoe into the desired position. The corresponding depth of cut can be read from the scale (14).
- Set depth adjustment of saw such that one tooth (15) of the blade projects below the workpiece (16) as shown in **figure I**.
- Tighten the knob to lock the saw shoe in place.

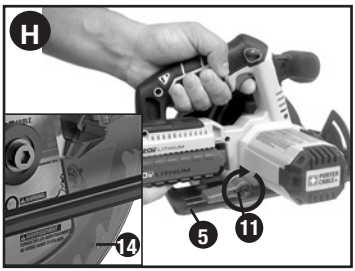

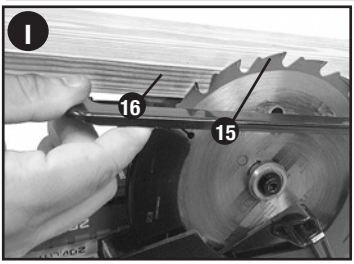

BEVEL ANGLE ADJUSTMENT - FIGURE J

This tool can be set to bevel angles between 0° and 50°.

- Loosen the bevel adjustment knob (10) to unlock the saw shoe (5).
- Move the saw shoe (5) into the desired position. The corresponding bevel angle can be read from the scale (17).
- Tighten the bevel adjustment knob (10) to lock the saw shoe in place.
- Confirm the accuracy of the setting by checking the bevel angle of an actual cut on a scrap piece of material.

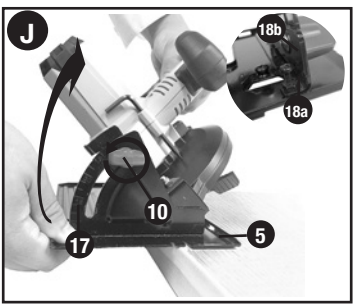

SHOE ADJUSTMENT FOR 90° CUTS

The shoe (5) has been set by the factory to assure that the blade is perpendicular to the shoe at 0° bevel setting.
IF REALIGNMENT IS NEEDED:

- Adjust the s aw to 0° bevel.
- Retract blade guard (8).
- Loosen bevel adjustment knob (10). Place a square against the blade (7) and shoe (5) to adjust the 90° setting.
- Loosen jam nut (18a) and move the adjustment screw (18b) **(inset figure J)** so that the shoe will stop at the proper angle. Retighten jam nut against the shoe while holding adjustment screw in position.
- Confirm the accuracy of the setting by checking the squareness of an actual cut on a scrap piece of material.

ATTACHING AND REMOVING THE BLADE - FIGURE K - L

- Retract lower guard and assemble blade (7) and clamp washer (19) as shown in **figure K**.
- Depress the spindle lock (12) while turning the blade bolt (20) with the blade wrench (9) until the blade lock engages and the blade stops rotating.
  NOTE: Blade wrench is stored on the saw as shown in **figure L.**
- Tighten the blade bolt securely with the blade wrench.
  NOTE: Bolt has a left-handed thread. To loosen, turn clockwise. To tighten, turn counterclockwise.
  NOTE: Never engage the blade lock while the saw is running, or engage in an effort to stop the tool. Never turn the tool on while the blade lock is engaged. Serious damage to your saw will result.

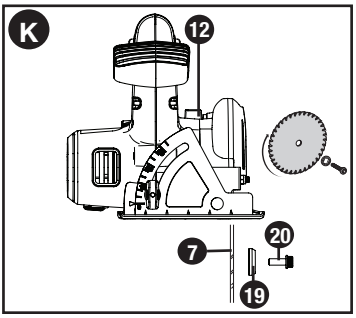

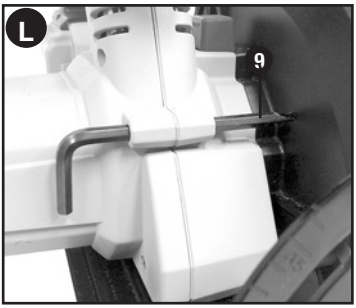

LOWER BLADE GUARD

⚠ **WARNING: Laceration Hazard. The lower blade guard is a safety feature which reduces the risk of serious personal injury. Never use the saw if the lower guard is missing, damaged, mis-assembled or not working properly. Do not rely on the lower blade guard to protect you under all circumstances. Your safety depends on following all warnings and precautions as well as proper operation of the saw. Check lower guard for proper closing before each use as outlined in Additional Safety Rules for Circular Saws. If the lower blade guard is missing or not working properly, have the saw serviced before using. To assure product safety and reliability, repair, maintenance and adjustment should be performed by an authorized service center or other qualified service organization, always using identical replacement parts.**

⚠ **WARNING:** To minimize the risk of eye injury, always use eye protection. Carbide is a hard but brittle material. Foreign objects in the work piece such as wire or nails can cause tips to crack or break. Only operate saw when proper saw blade guard is in place. Mount blade securely in proper rotation before using, and always use a clean, sharp blade.

⚠ **WARNING: To reduce the risk of injury, It is important to support the work properly and to hold the saw firmly to prevent loss of control which could cause personal injury. Figure G** illustrates typical hand support.

⚠ **WARNING: To reduce the risk of serious personal injury, read, understand and follow all important safety warnings and instructions prior to using tool.**

BLADE SELECTION

Your circular saw is designed for use with 6-1/2 inch (165 mm) diameter blades that have a 5/8 inch (15.9 mm) diameter bore. Blades must be rated for 6000 RPM operation (or higher). DO NOT use any abrasive wheels..

GENERAL CUTS

⚠ **WARNING: To reduce the risk of injury, remove the battery, and follow all assembly, adjustment and set up instructions.**

Make sure lower guard operates. Select the proper blade for the material to be cut.

- Measure and mark work for cutting.
- Support and secure work properly (See Safety Rules and Instructions).
- Use appropriate and required safety equipment (See Safety Rules).
- Secure and maintain work area (See Safety Rules).
- With battery inserted, make sure switch turns saw on and off.

ON/OFF SWITCH

Saw is equipped with a switch lock-off feature to prevent unintentional operation.

- To operate the tool, press in on the lock-off button (2) from either side of the saw and hold it in as you depress the trigger switch (1).
- After you have depressed the trigger and the tool is running, release the lock-off button. The tool will continue to run as long as the trigger is depressed.
- To turn the tool off, release the trigger switch.

NOTE: This tool has no provision for locking the tool on, and the switch should never be locked on by any other means.

AUTOMATIC ELECTRIC BRAKE

Your saw is equipped with an electric blade brake which stops the saw blade within 1-2 seconds of trigger release. This is automatic and requires no adjustment.

SAWING

⚠**WARNING:** To reduce the risk of serious personal injury,always hold the tool with both hands.

- Let the blade run freely for a few seconds before starting the cut.
- Apply only a gentle pressure to the tool while performing the cut.
- Work with the shoe pressed against the workpiece.

HINTS FOR OPTIMUM USE

- As some splintering along the line of cut on the top side of the workpiece cannot be avoided, cut on the side where splintering is acceptable.
- Where splintering is to be minimized, e.g. when cutting laminates, clamp a piece of plywood onto the top of the workpiece.

POCKET CUTTING -FIGURE M

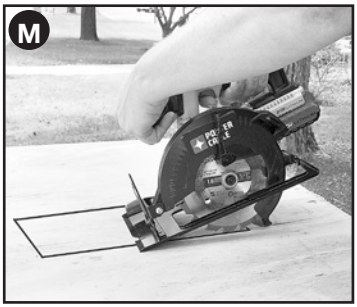

⚠**WARNING: Never tie the blade guard in a raised position. Never move the saw backwards when pocket cutting. This may cause the unit to raise up off the work surface which could cause injury.**

A pocket cut is one that is made when the edge of the material does not push the lower guard open, but the bottom edge of the rotating blade cuts into the middle of the material.

- Adjust the shoe (5) so the blade cuts at desired depth.
- Tilt the saw forward and rest front of the shoe on material to be cut.
- Using the retracting lever, retract lower blade guard to an upward position. Lower rear of shoe until blade teeth almost touch cutting line.
- Release the blade guard (its contact with the work will keep it in position to open freely as you start the cut). Remove hand from guard lever and firmly grip secondary handle (4), as shown in **figure M**. Position your body and arm to allow you to resist kickback if it occurs.
- Make sure blade is not in contact with cutting surface before starting saw.
- Start the motor, allow saw to come to full speed, and then gradually lower the saw until its shoe rests flat on the material to be cut. Advance saw along the cutting line until cut is completed.
- Release trigger and allow blade to stop completely before withdrawing the blade from the material.
- When starting each new cut, repeat as above.

The RBRC™ Seal

The RBRC™ (Rechargeable Battery Recycling Corporation) Seal on the Li-Ion battery (or battery pack) indicates that the costs to recycle the battery (or battery pack) at the end of its useful life have already been paid by PORTER-CABLE. RBRC™ in cooperation with PORTER-CABLE and other battery users, has established programs in the United States to facilitate the collection of spent Li-Ion batteries. Help protect our environment and conserve natural resources by returning the spent Li-Ion battery to an authorized PORTER-CABLE service center or to your local retailer for recycling. You may also contact your local recycling center for information on where to drop off the spent battery.

RBRC™ is a registered trademark of the *Rechargeable Battery Recycling Corporation.*

MAINTENANCE

Use only mild soap and damp cloth to clean the tool. Never let any liquid get inside the tool; never immerse any part of the tool into a liquid.

TROUBLESHOOTING

Problem	Possible Cause	Possible Solution
• Unit will not start.	• Battery pack not installed properly.	• Check battery pack installation.
	• Battery pack not charged.	• Check battery pack charging requirements.
• Unit starts immediately upon inserting battery.	• The switch has been left in the “on” position.	• The switch must be moved to “off” to prevent the tool from immediately starting when battery is inserted
• Battery pack will not charge.	• Battery pack not inserted into charger.	• Insert battery pack into charger until LED lights.
	• Charger not plugged in.	• Plug charger into a working outlet. Refer to “Important Charging Notes” for more details.
	• Surrounding air temperature too hot or too cold.	• Move charger and battery pack to a surrounding air temperature of above 40 degrees F (4,5°C) or below 105 degrees F (+40,5°C).
• Unit shuts off abruptly.	• Battery pack has reached its maximum thermal limit.	• Allow battery pack to cool down.
	• Out of charge. (**To maximize the life of the battery pack it is designed to shutoff abruptly when the charge is depleted.**)	• Place on charger and allow to charge.