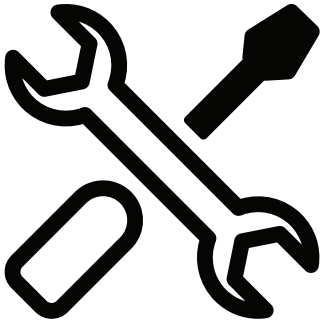

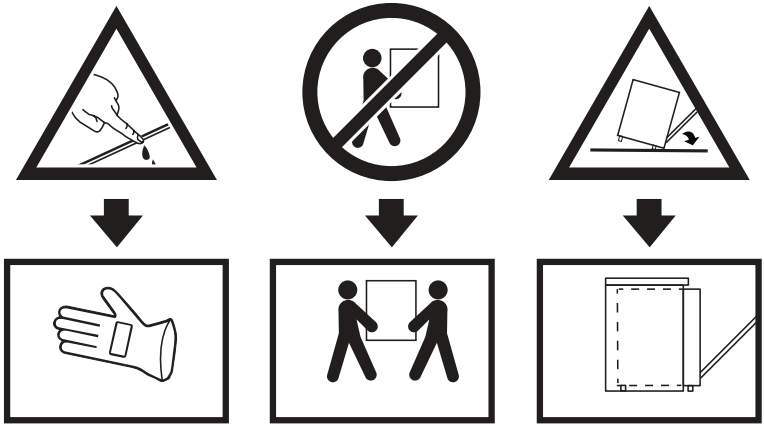

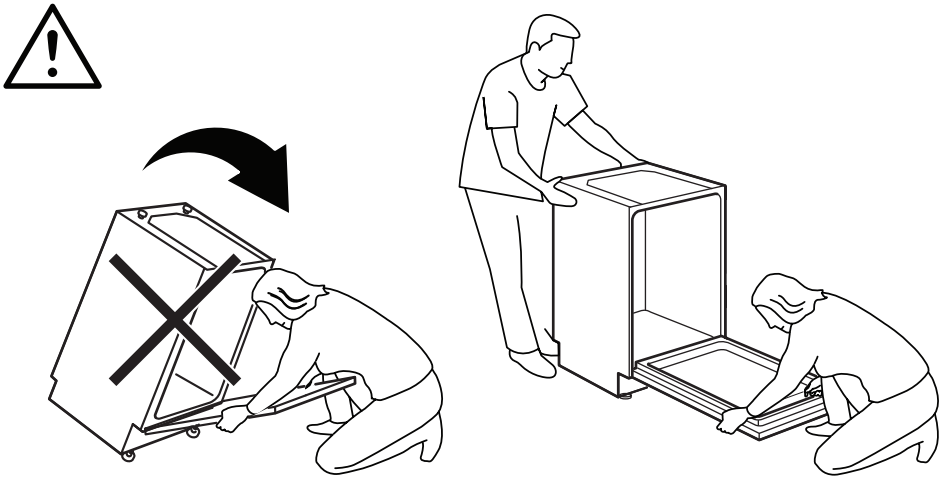

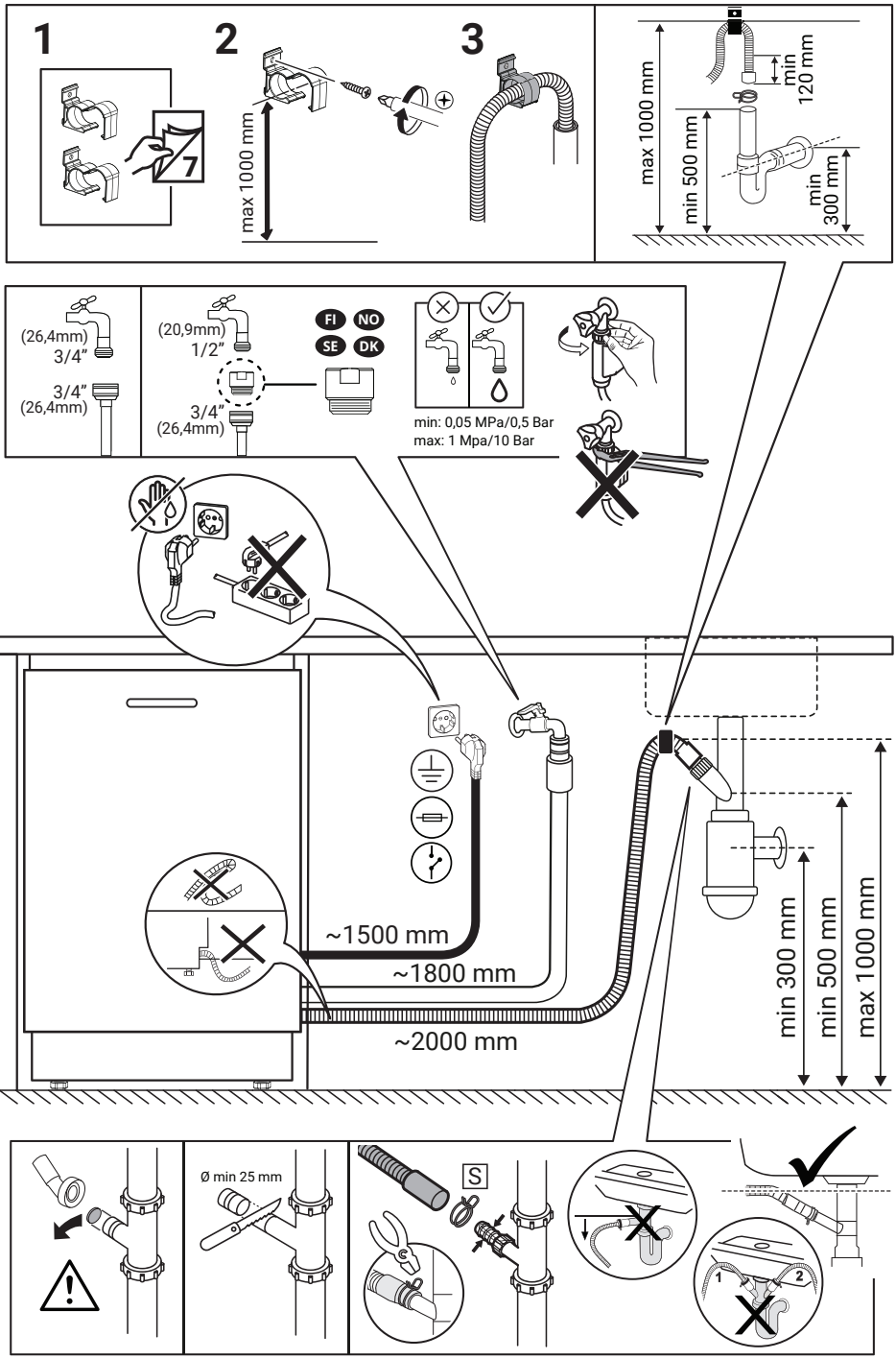
1
2
3
max 1000 mm
max 1000 mm
min 120 mm
min 500 mm
min 300 mm
(26,4mm) 3/4"
3/4" (26,4mm)
(20,9mm) 1/2"
3/4" (26,4mm)
FI NO SE DK
min: 0,05 MPa/0,5 Bar
max: 1 Mpa/10 Bar
~1500 mm
~1800 mm
~2000 mm
min 300 mm
min 500 mm
max 1000 mm
Ø min 25 mm
S
1
2

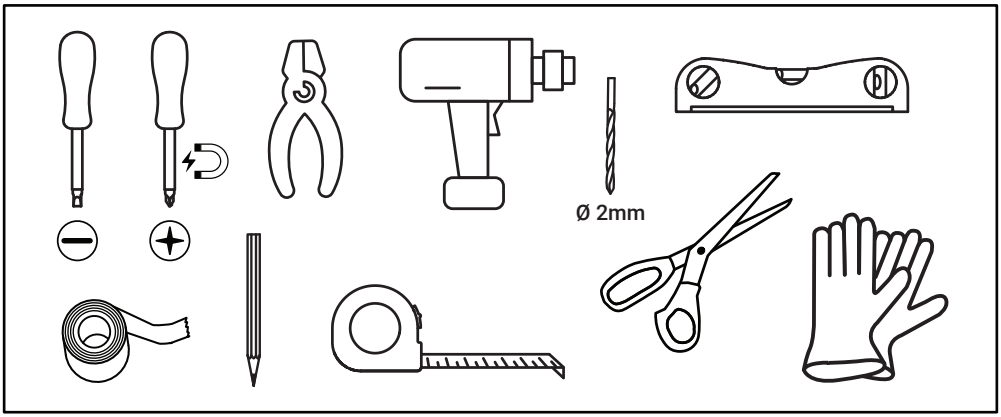

Ø 4 x 13 mm A **10x**	Ø 4 x 16 mm C **2x**	Ø 4 x 16 mm D **2x**	Ø 4 x 25 mm E **2x**	Ø 4 x 36 mm G **4x**	H **1x**
L **1x**	R **1x**	S **1x**	U **2x**	F **4x**	J **2x**
K **4x**	SLIDING M **2x**	N **1x**			

1

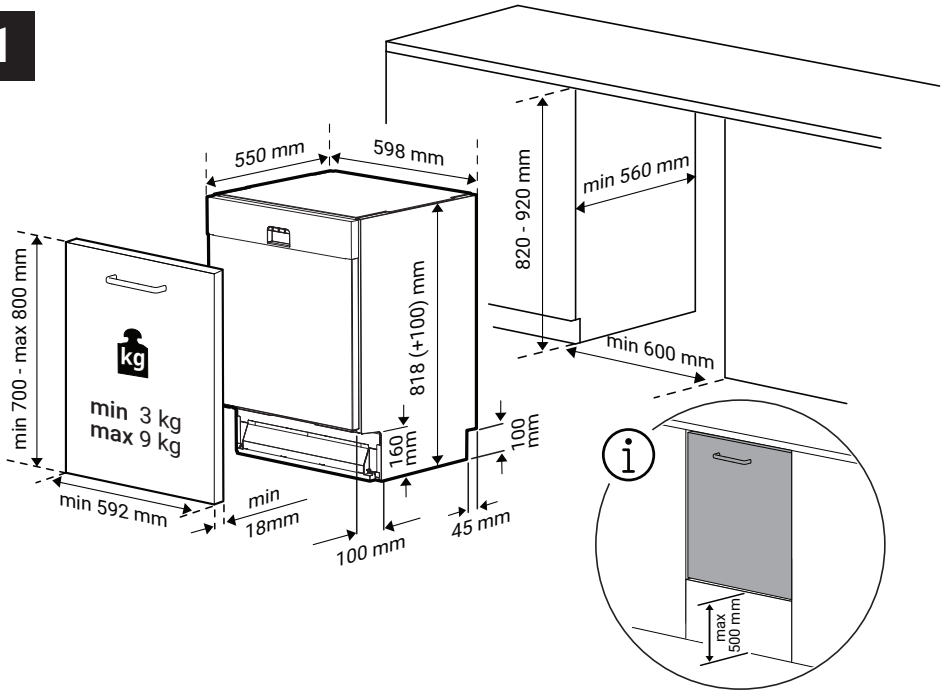
550 mm
598 mm
820 - 920 mm
min 560 mm
min 700 - max 800 mm
818 (+100) mm
min 600 mm
min 3 kg
max 9 kg
160 mm
100 mm
min 592 mm
min 18mm
100 mm
45 mm
max 500 mm

2

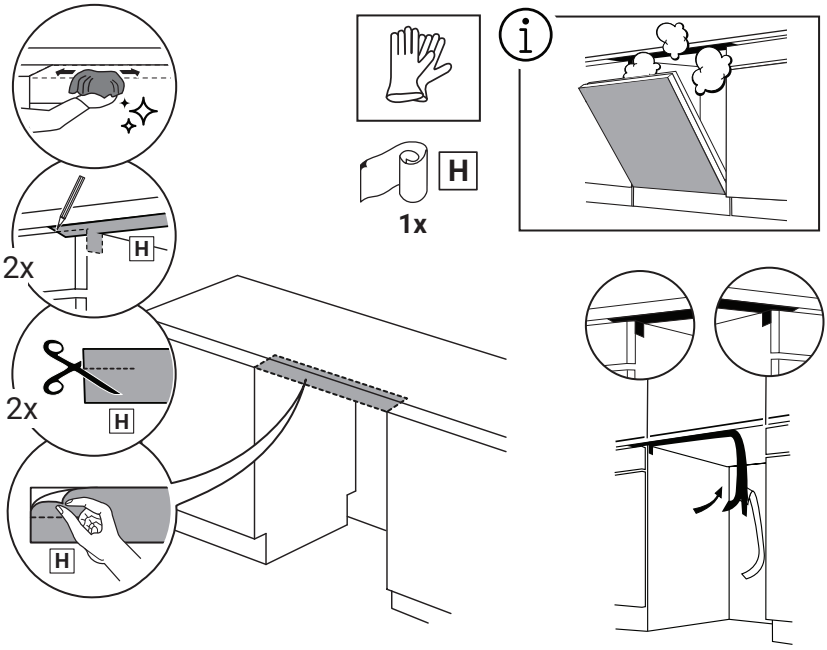
H
1x
2x
2x
H
H
H

3

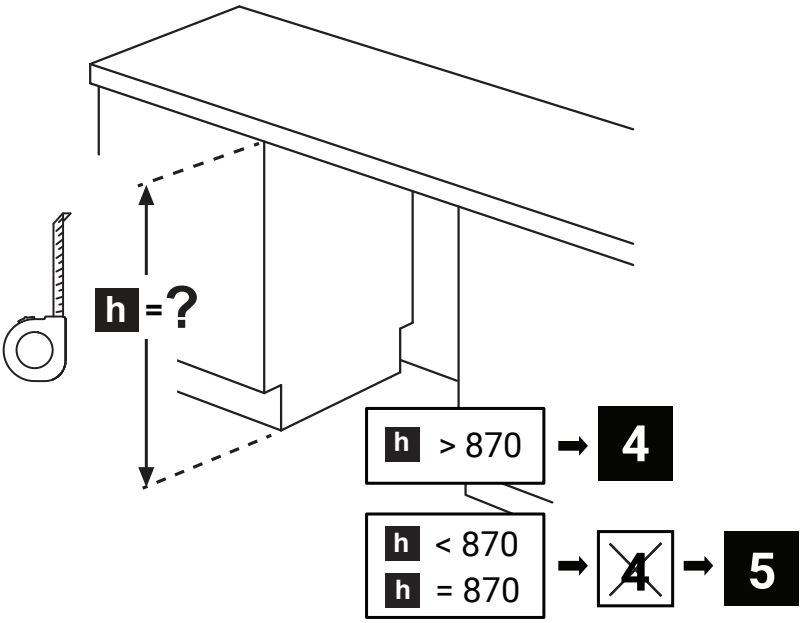
h =?
h > 870
4
h < 870
h = 870
4
5

4

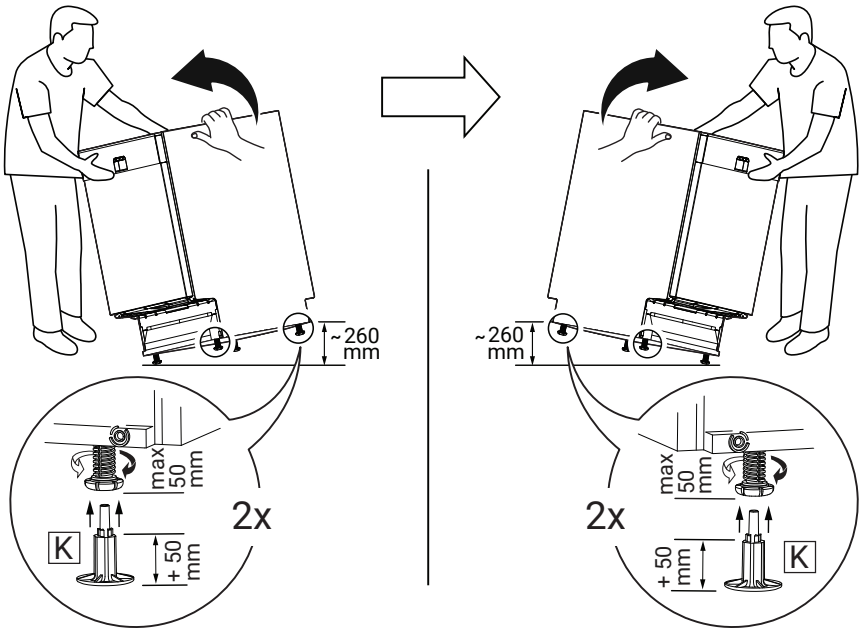
~260 mm
max 50 mm
2x
K
+ 50 mm
~260 mm
max 50 mm
2x
+ 50 mm
K

5

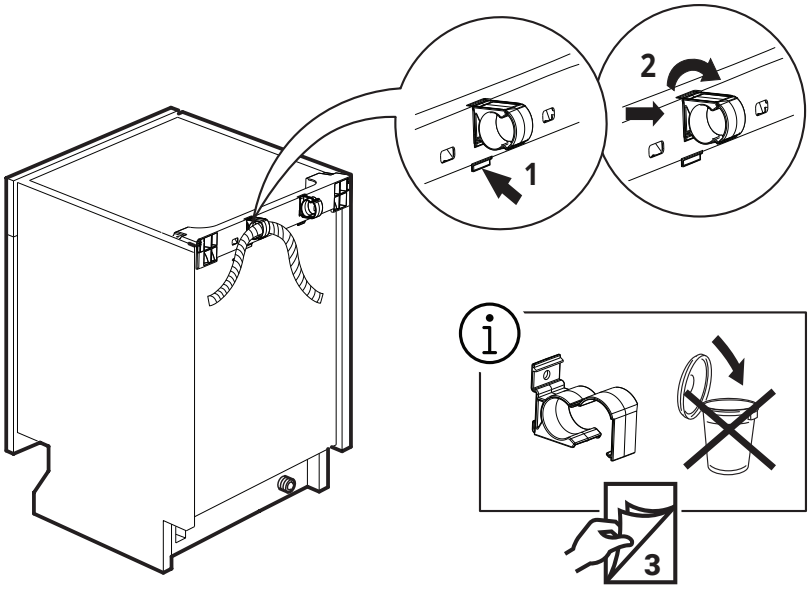

6

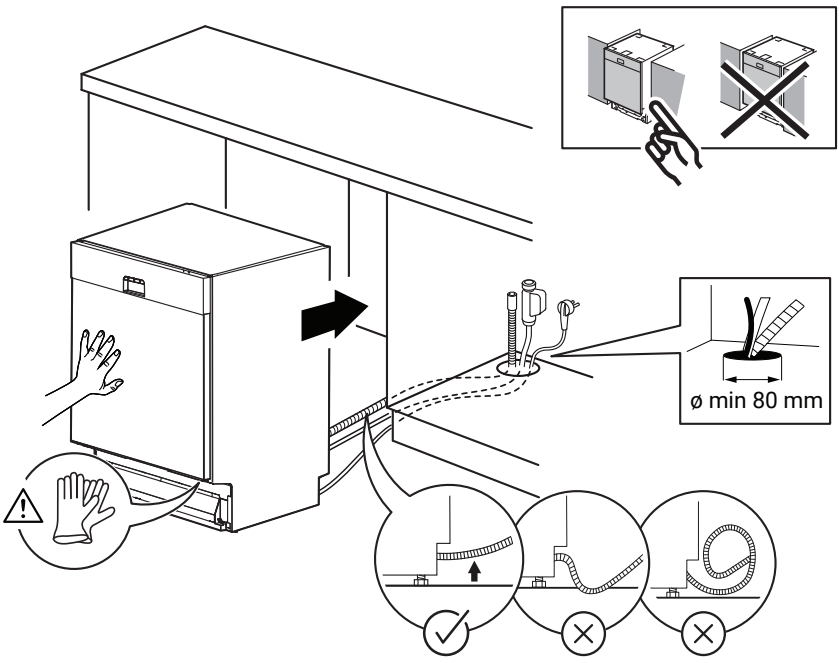

7

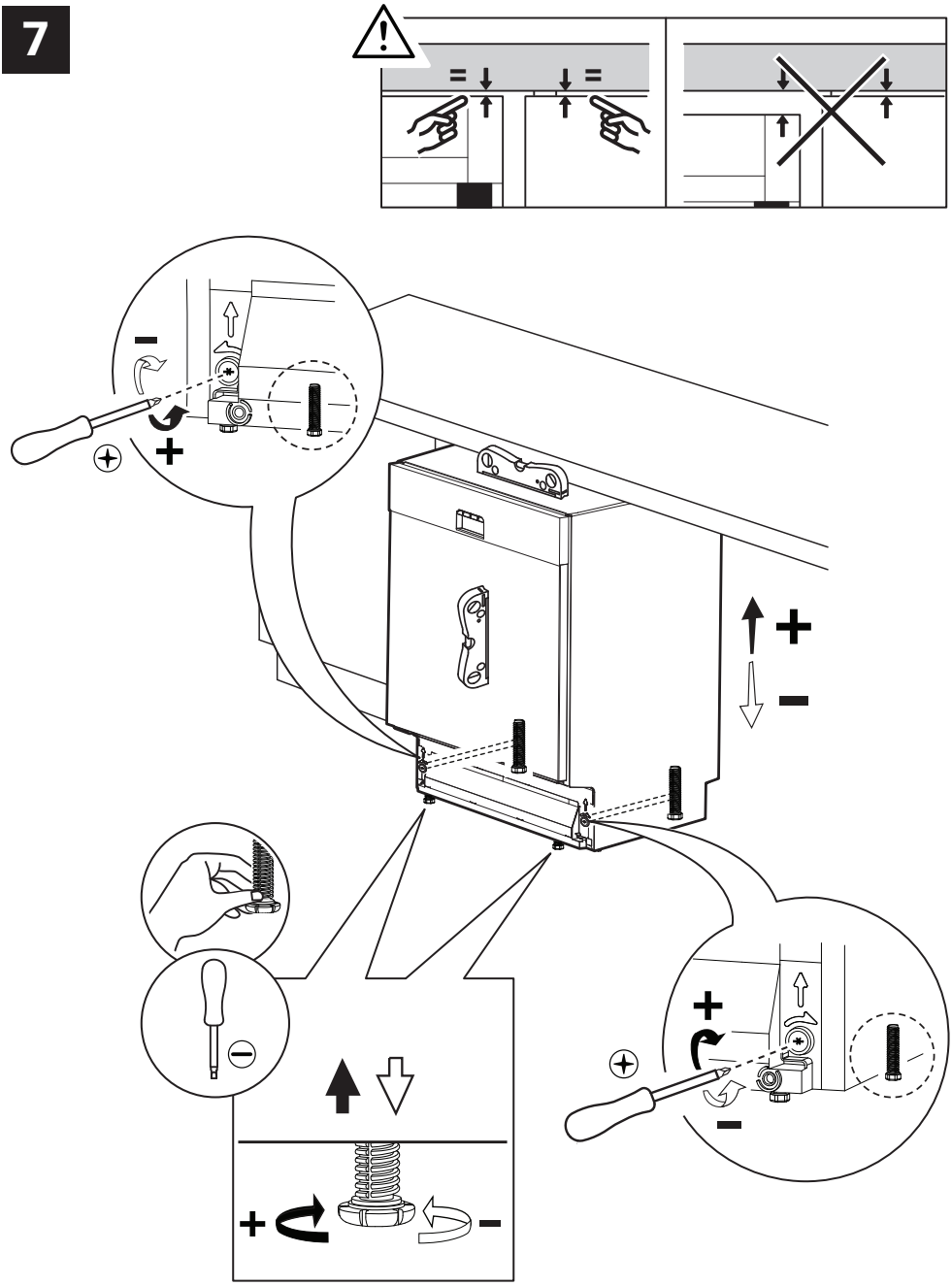

8

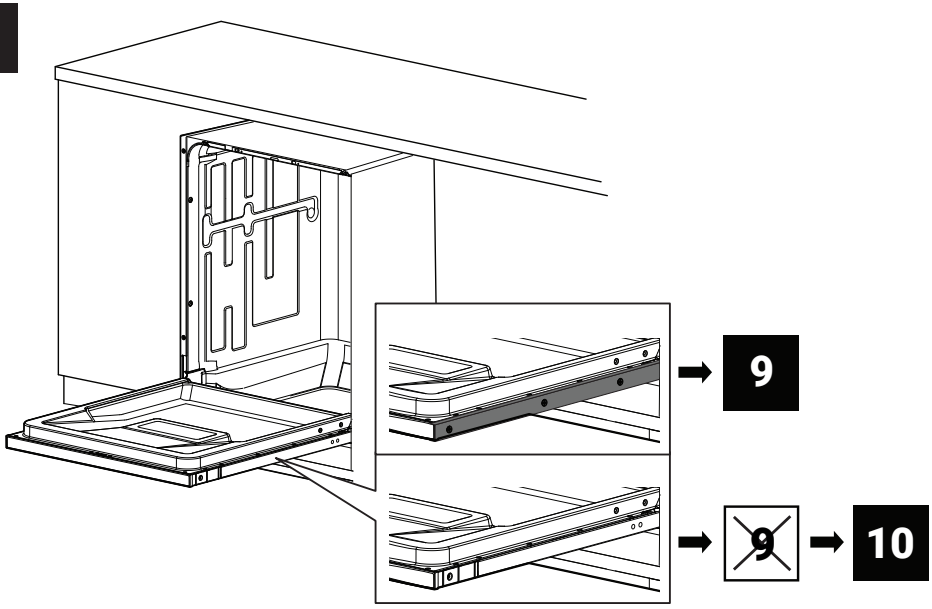

9

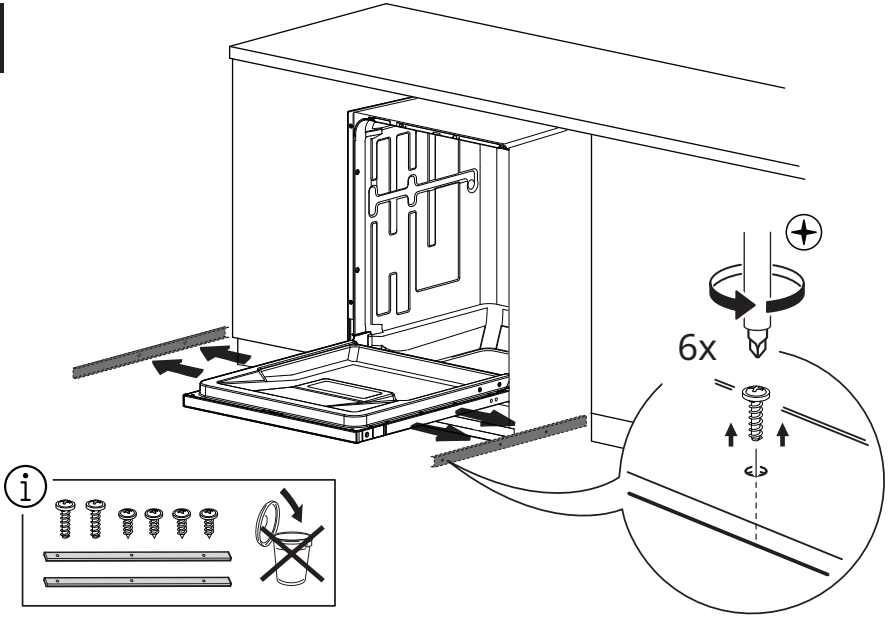

10

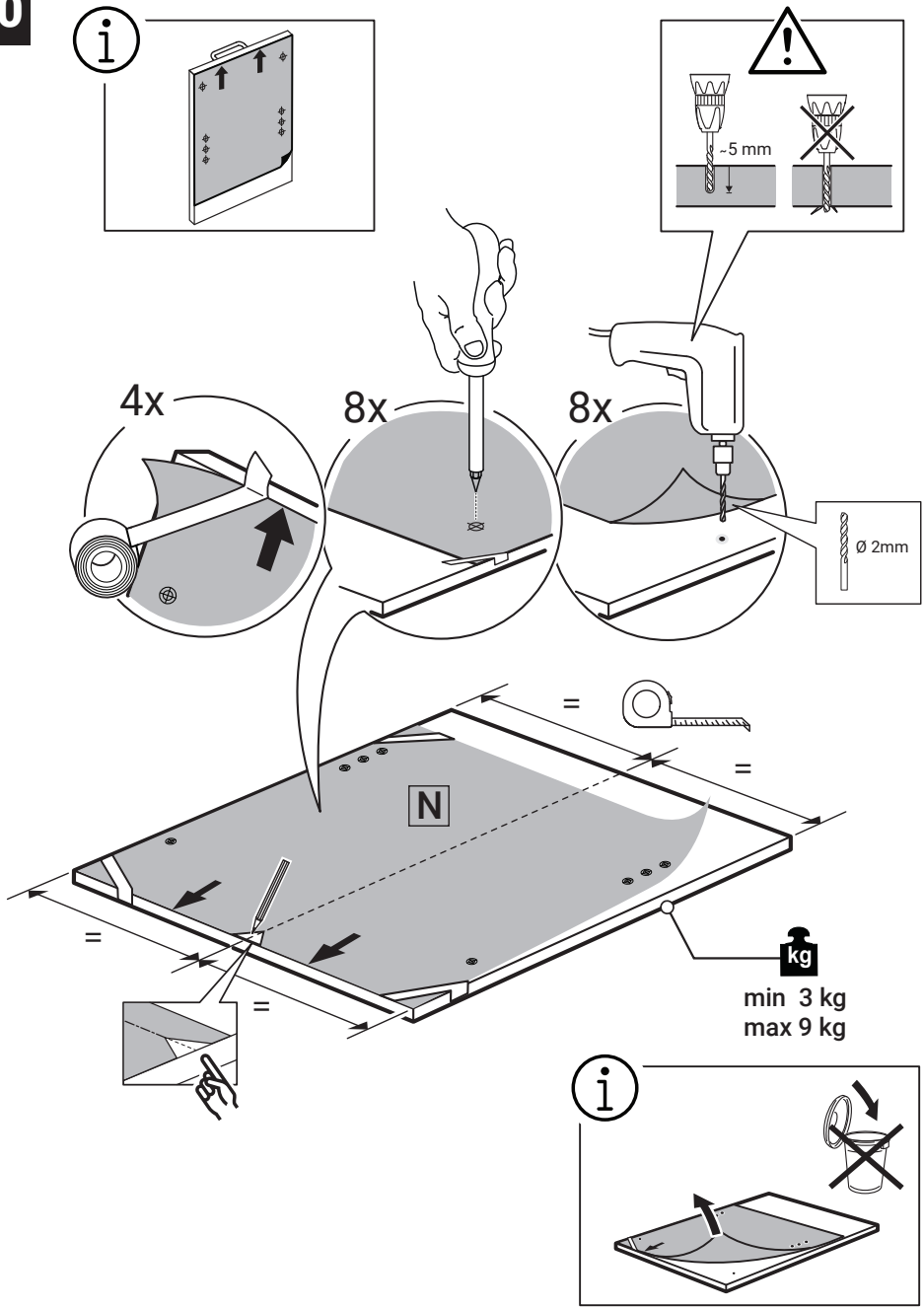

11

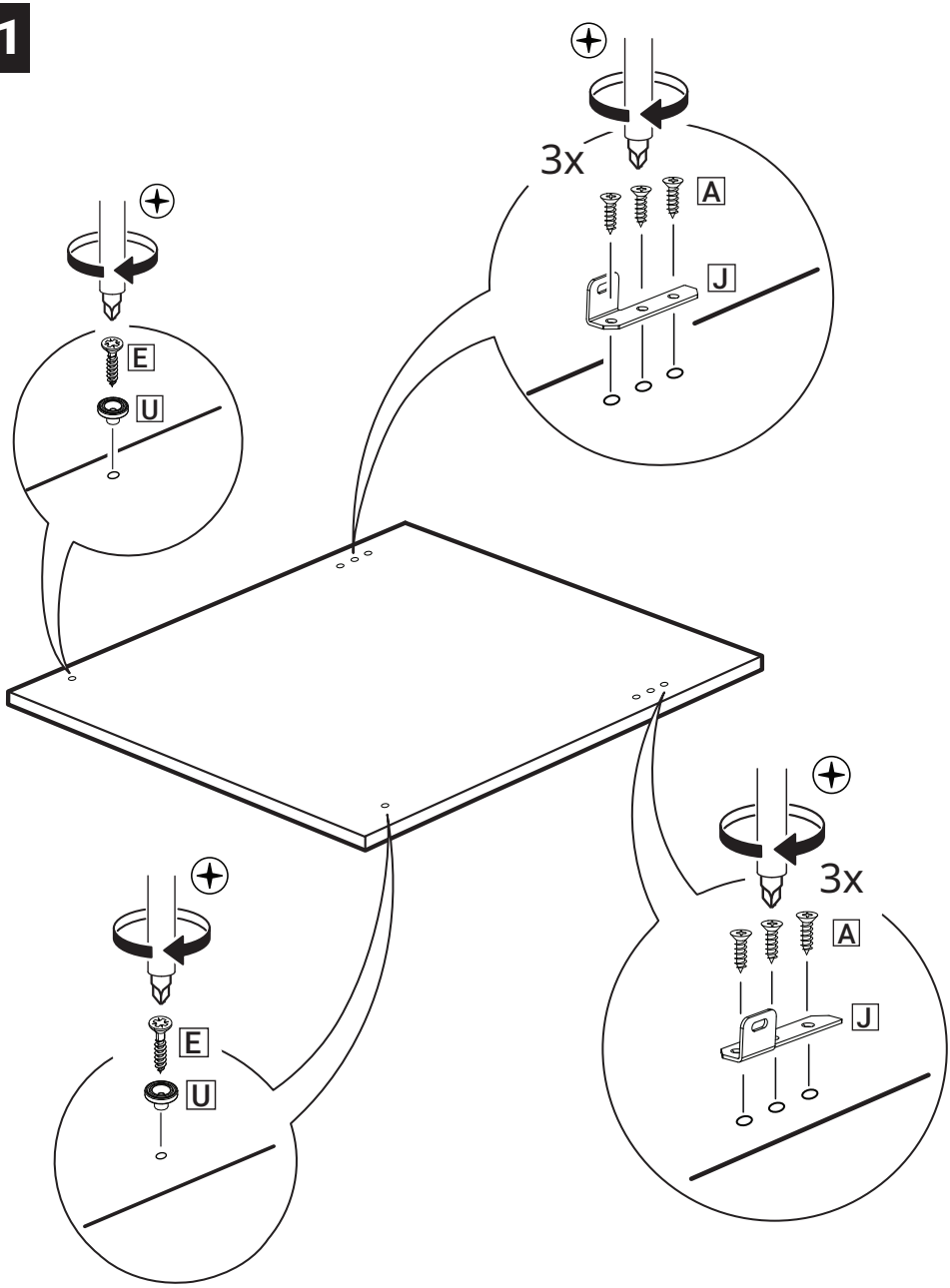

12

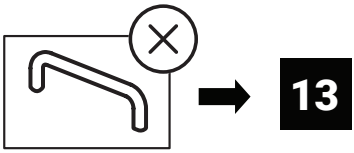

13

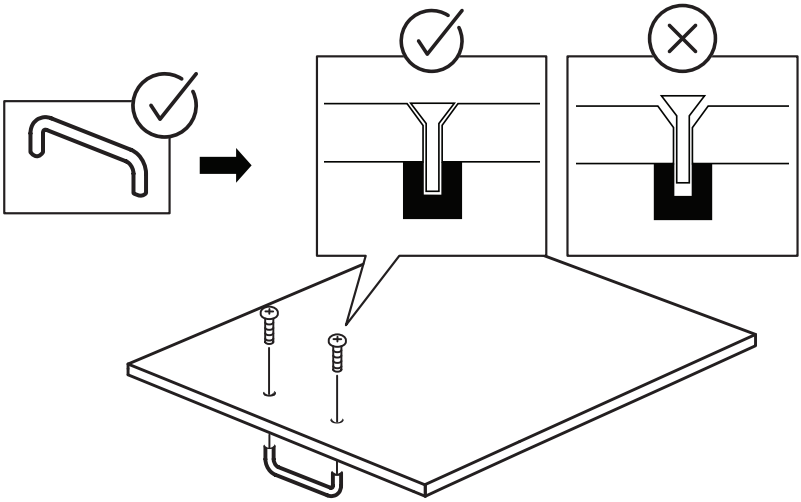

13

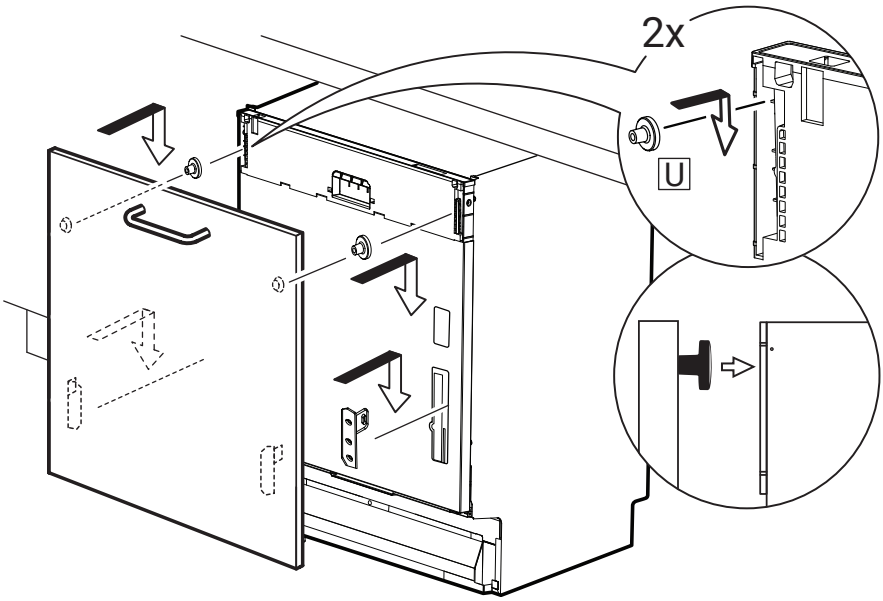

14

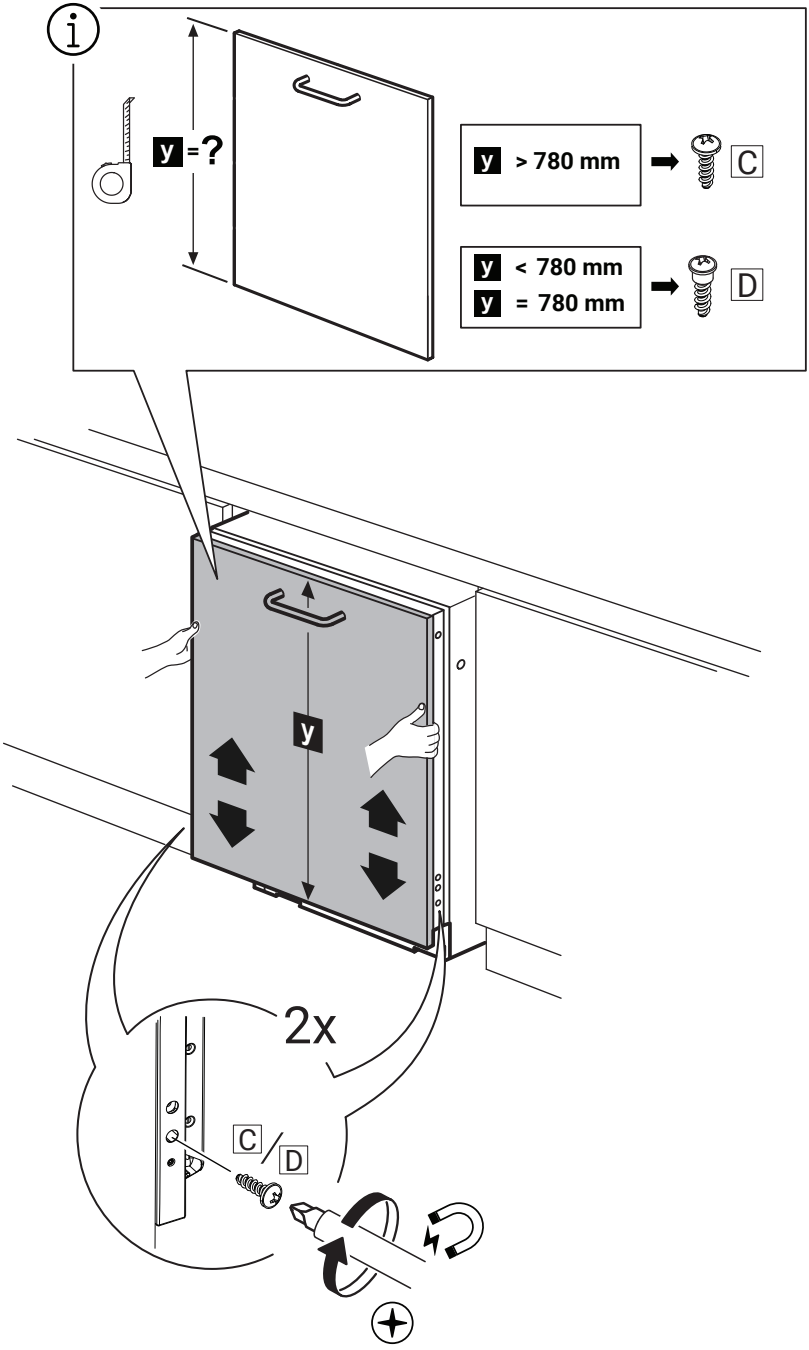

15

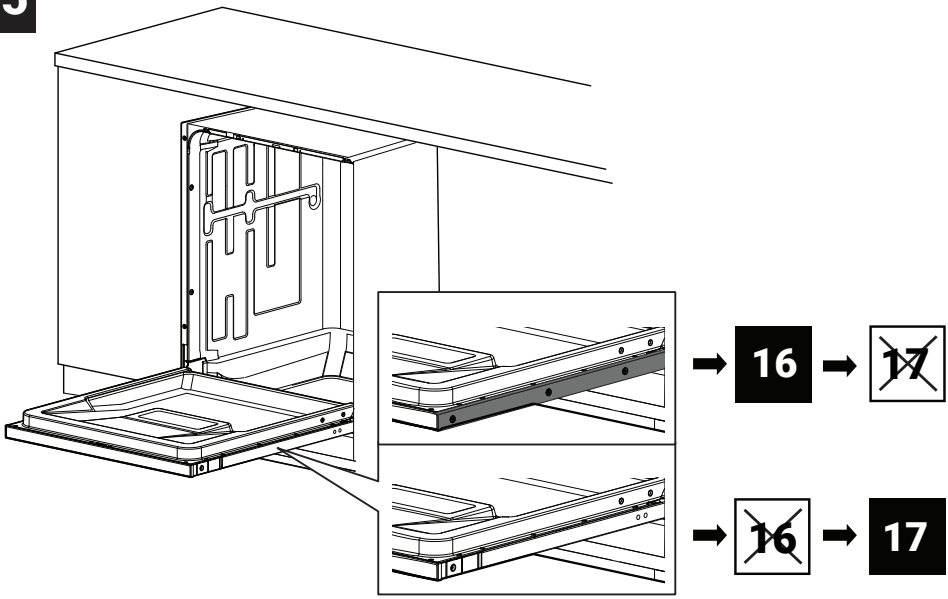

16

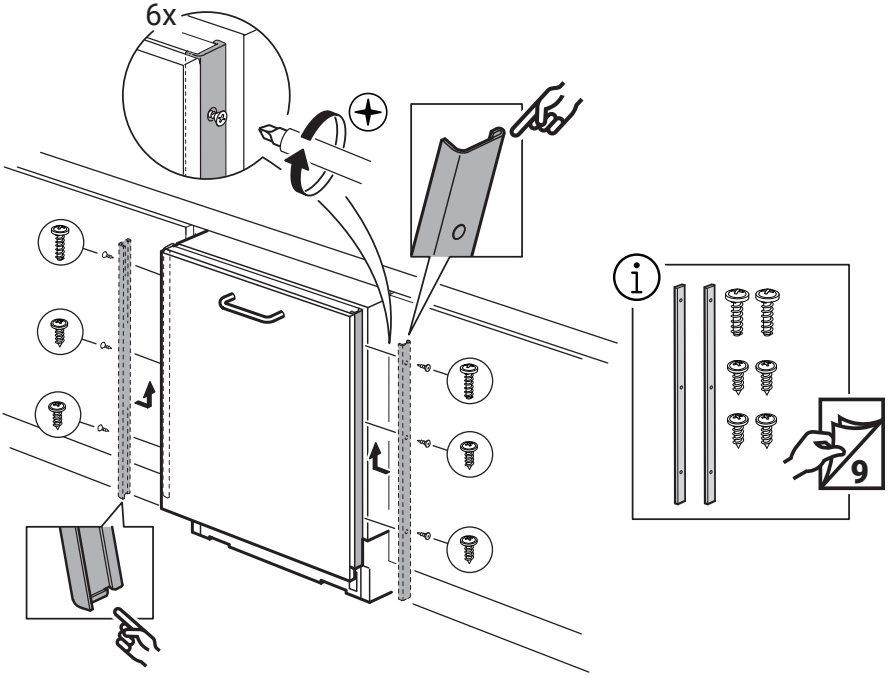

17

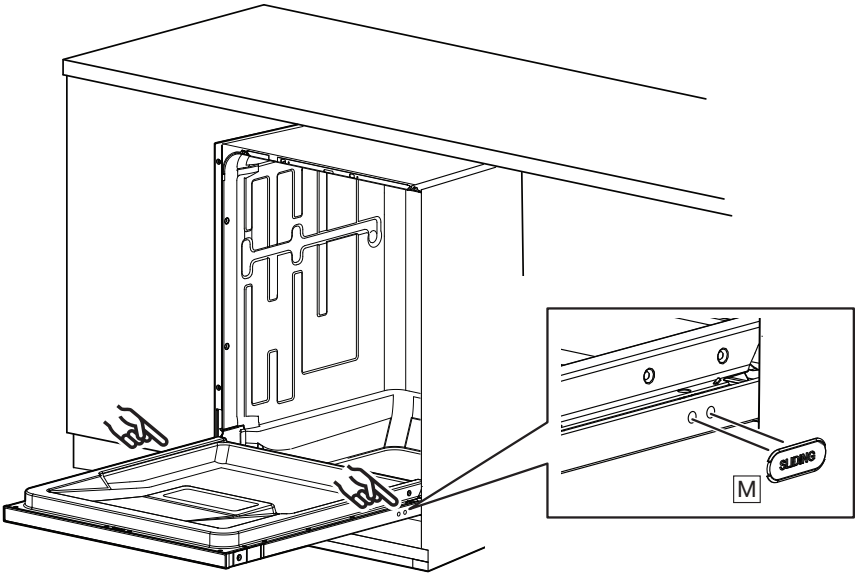
SLIDING
M

18

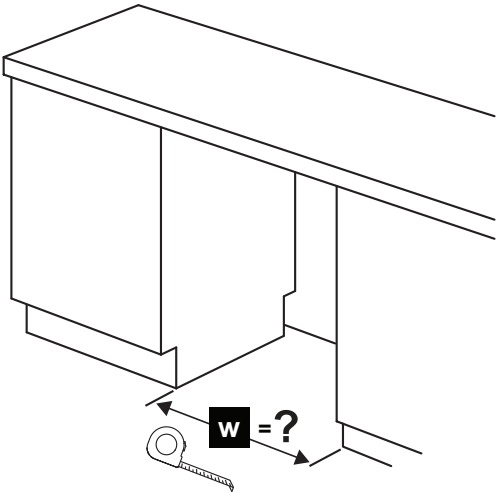
w = ?

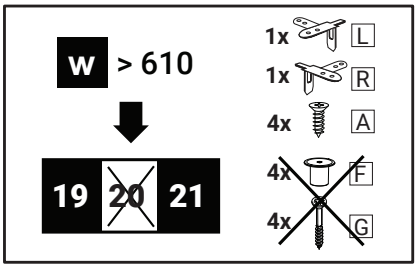
w > 610
19 20 21
1x L
1x R
4x A
4x F
4x G

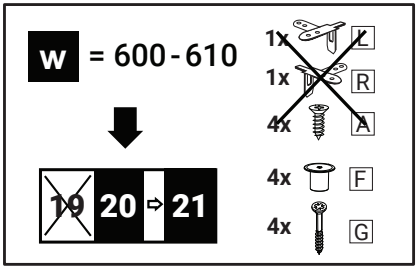
w = 600-610
19 20 ⇨ 21
1x L
1x R
4x A
4x F
4x G

19
a

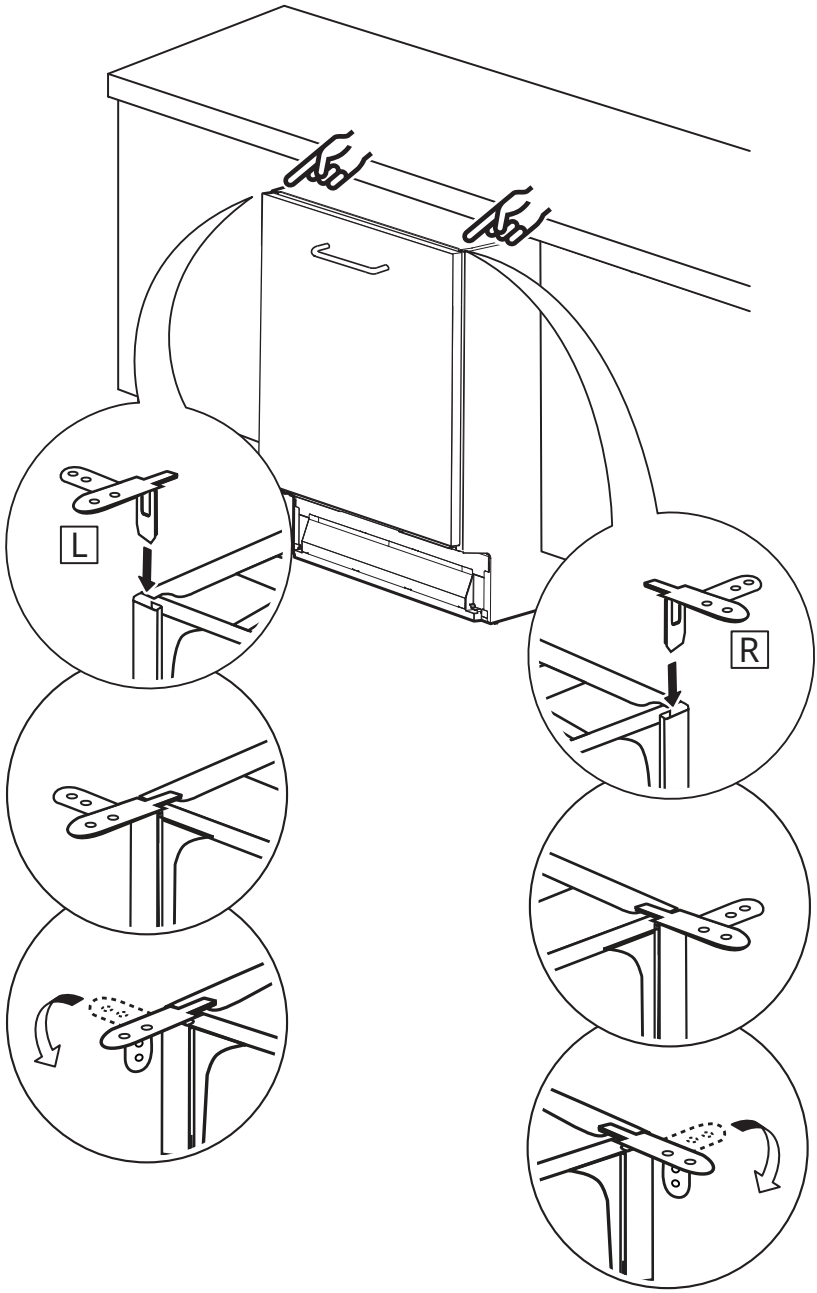

19
b

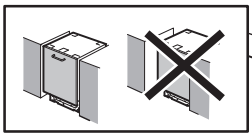

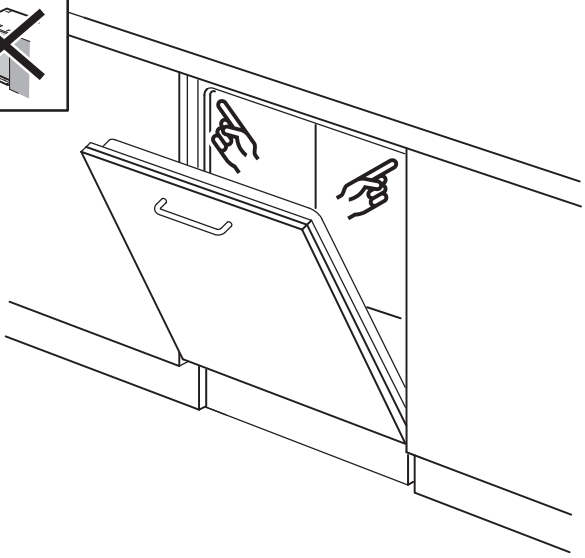

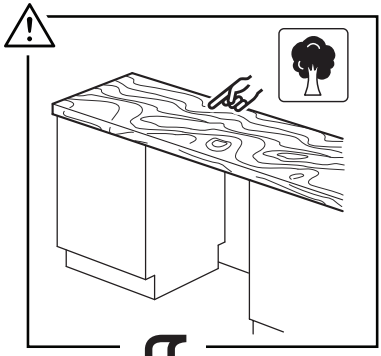

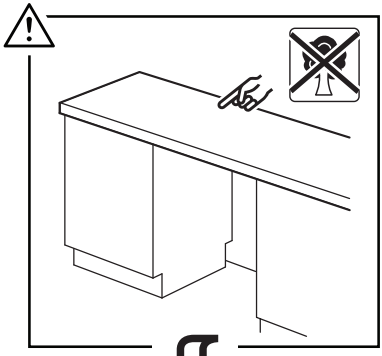

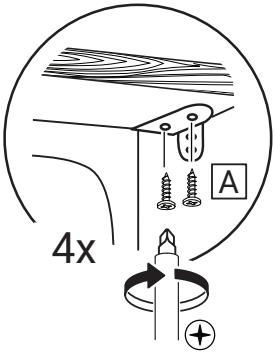

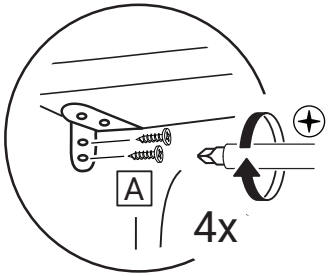

20 a

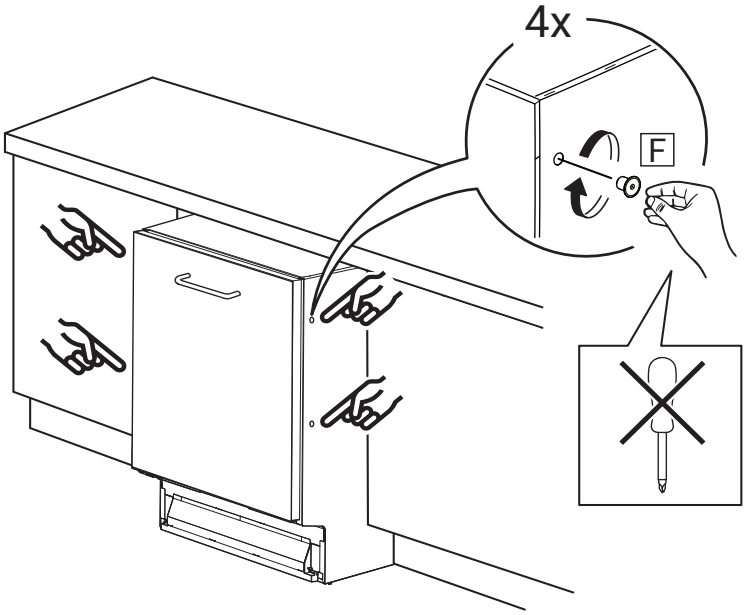

20 b

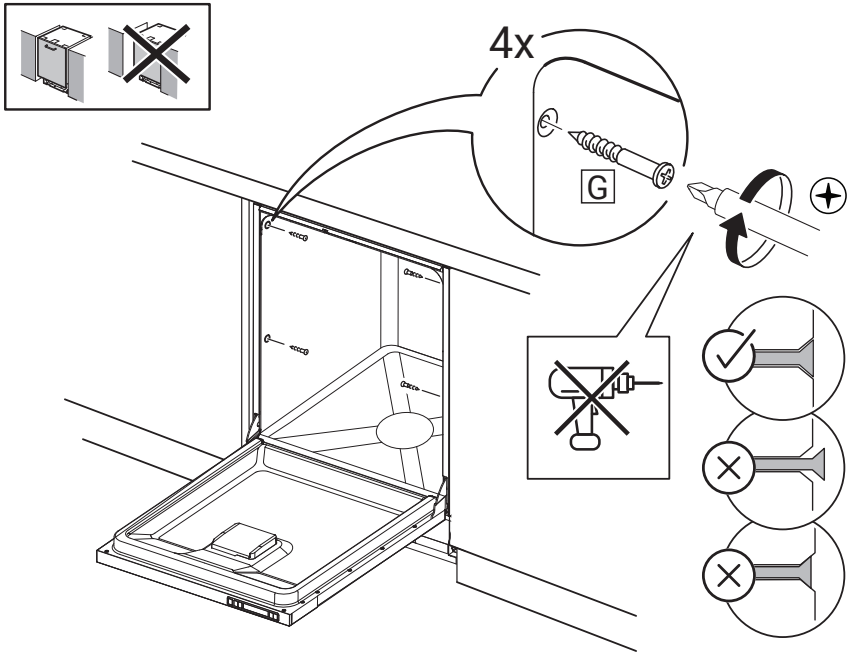

21

