CHAP. 8 - DISPOSAL OF THE MACHINE

8.1 - DISINSTALLATION
If it has been decided to disinstall the machine for some reason, ensure that the machine is unusable by anyone: **detach and cut electrical connections.**

SERVICE CENTRE
AUTHORISED DEALER

Ver. 001 - ed. 06/2021

Professional Hand-Held Mixer

W 20-28-36 / VT
W 43-55-75 / VT

Regular
Stabilized speed variator

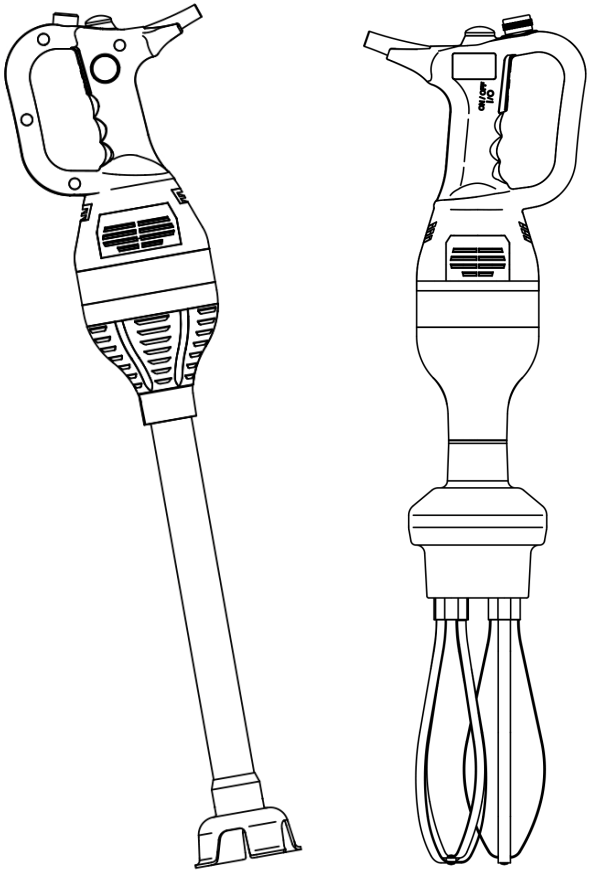

Instructions for use and maintenance

INTRODUCTION

- This manual has been written to supply the Customer with all the information on the machine and the related safety rules, as well as the instructions for the receipt of the machine itself, cleaning, maintenance and disposal that allow to use and maintain the means keeping its efficiency intact throughout the time.
- This manual it to be kept till the disposal of the machine.
- This manual is to be kept at disposal of members of staff that have been appointed to operate the machine and to carry out maintenance tasks.

TABLE OF CONTENTS

CHAP. 1 - RECEIPT OF THE MACHINE page 4
1.1 - PACKAGING
1.2 - BOX CHECK UPON RECEIPT

CHAP. 2 - INSTALLATION page 6
2.1 - UNWRAPPING
2.2 - PLACEMENT
2.3 - ELECTRICAL CONNECTION
2.4 - ELECTRICAL DIAGRAM

CHAP. 3 - MACHINE'S INFORMATION page 10
3.1 - GENERAL PRECAUTIONS

CHAP. 4 - GETTING ACQUAINTED WITH THE MACHINE page 13
4.1 - MACHINE'S DESCRIPTION
4.2 - IN-BUILT FEATURES
4.3 - IN-BUILT SAFETY DEVICES
4.3.1 - Mechanical safety devices
4.3.2 - Electrical safety devices
4.4 - OVERALL DIMENSIONS, WEIGHT, FEATURES

CHAP. 5 - USE OF THE MACHINE page 19
5.1 - MOUNTING THE ACCESSORIES
5.2 - PREPARATORY CHECK
5.3 - USE'S FIELDS
5.4 - MACHINE'S USE

CHAP. 6 - REGULAR CLEANING page 23
6.1 - GENERAL INFORMATION
6.2 - EXTRA CLEANING
6.2.1 - GENERAL INFORMATION

CHAP. 7 - MAINTENANCE

7.1 - GENERAL INFORMATION
Before carrying out any maintenance task, it is recommended to:
unplug the feeding cable from the net to insulate the machine from the rest of the plant completely.

7.2 - DIPPING OF ACCIDENTAL FALL OF THE MACHINE
In case of immersion or accidental fall of any accessory or the machine itself, do not use it and contact CUSTOMER SERVICE.

7.3 - SHAFT AND WHIP FIXING
Check that the shaft and the whip are firmly and solidly fixed to the engine's body. If this is not the case, please contact CUSTOMER SERVICE.

7.4 - FEEDING CABLE
Periodically, check the state of wear of the feeding cable and in case, contact CUSTOMER SERVICE.

7.5 - COMMANDS LINING
Periodically, check the state of wear of the rubber commands lining and in case of wear contact CUSTOMER SERVICE.

7.6 - BLADE
Check the sharpness of the shaft's blades to replace them, please contact CUSTOMER SERVICE.

7.7 - WHIPS
Check that the whips keep their original conformation and that they do not detach easily from the whip's body. If this is not the case, please contact CUSTOMER SERVICE.

7.8 - GASKETS - SEALING RINGS
Periodically check the sealing gaskets, once the knife-holding base is disassembled (Fig. 64)
If these show wear, contact CUSTOMER SERVICE.

it is recommended to use protective gloves and to be extremely careful all the time.

Disassembly of the shaft (Fig. 64)

1. Detach the shaft from the engine's body and position it on a surface with the knives on the right side.
2. Predispose the tools (a-b-c), grip the tool (c) with the left hand and insert it in the dragging device inside the shaft
3. **ATTENTION:** Using a key (3), unscrew anticlockwise till the blade group is removed.
4. Grip the tool with the right hand (a) and insert it in the lower support matching the reference. Unscrew everything clockwise till removal of the lower support. Pay attention not to lose the sealing gasket (O-ring) from the lower support.
5. Remove the inner shaft from the main shaft pushing it towards the tool (c).
6. Proceed to clean the single pieces with a dump cloth and some dish detergent, keeping in mind that the bearings must not come into contact with liquids.
7. In case of encrustation, insist with the cloth. Do not use abrasives, pointy or sharp tools.
8. Re-assemble everything the opposite way. **ATTENTION:** fix firmly the knife or this could detach itself during the operating stage.

Check the state of the gaskets 1 and 2. In any other case, call Customer Service for supplies and replacements.

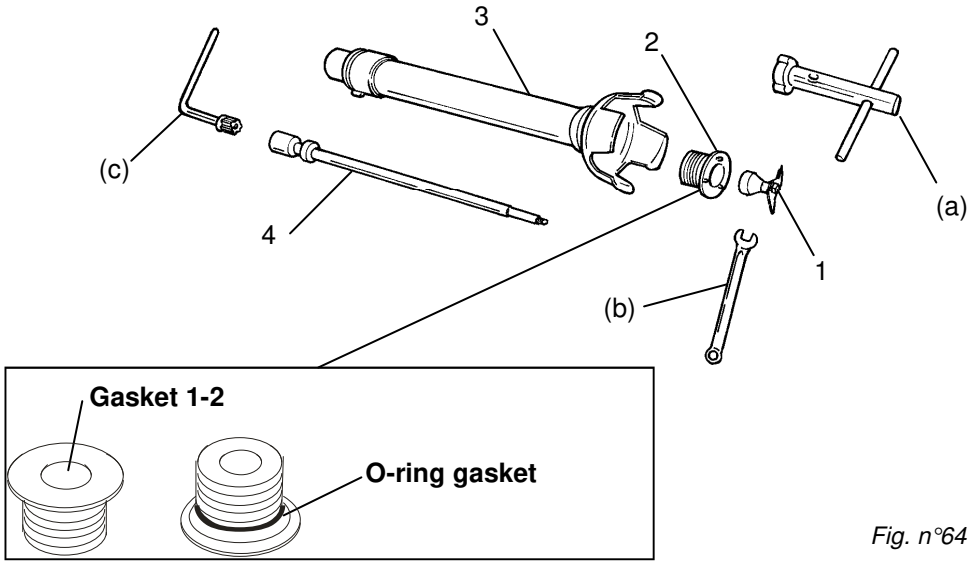

Fig. n°64

CHAP. 7 - MAINTENANCE page 27
7.1 - GENERAL INFORMATION
7.2 - DIPPING OF ACCIDENTAL FALL OF THE MACHINE
7.3 - SHAFT AND WHIP FIXING
7.4 - FEEDING CABLE
7.5 - COMMANDS LINING
7.6 - BLADE
7.7 - WHIPS
7.8 - GASKETS – SEALING RINGS

CHAP. 8 - DISPOSING OF THE MACHINE page 28
8.1 - DISINSTALLATION

CHAP. 1 - RECEIPT OF THE MACHINE

1.1 - PACKAGING

The box inside which the dipping blender is freighted, includes an individual wrapping for each component (Fig. 1):

- engine's body
- operating shafts (if ordered)
- whip (if ordered)
- transportation's suitcase (if ordered)
- wall bearing (if ordered)
- kettle bearing (if ordered)
- (Fig. 1): cartoon box, polystyrene inserts, nylon, etc. will have to be disposed of separately as per the enforcing norms of the country of installation.

	AxBxC *mm*	**Peso lordo** *Kg*
W 20	330x440x150	3
W 28	330x440x150	3,2
W 36	330x440x150	3,5
Shaft 25	210x320x220	1
Shaft 35	230x490x150	1,5
Whip	210x520x250	2
W 43	300x570x180	3
W 55	300x570x180	3,7
W 75	300x570x180	4,5
Shaft 35	230x490x150	1,5
Shaft 45	230x590x150	2
Whip	210x520x250	2,5
Suitcase	410x600x190	-

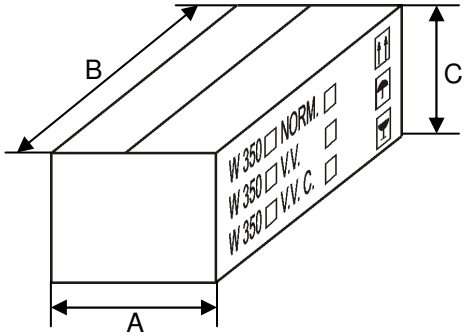

Fig. n°1

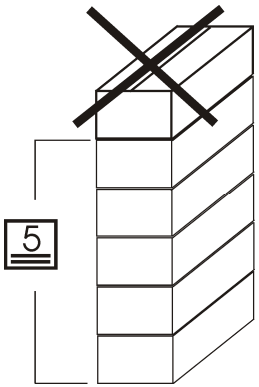

Fig. n°2

ATTENTION!

Superimpose up to a maximum of five boxes of the same type (Fig. 2).
It is recommended to keep the box at least throughout the time of warranty to facilitate transportation in case of repairs, etc.

to ease the drainage of residual liquid (Fig. 58).

8) Hence place the assembled whip on the special wall bearing (Fig. 58).

ENGINE'S BODY:

1. unplug the feeding cable from the net to insulate the machine from the electrical feeding completely (Fig. 61)
2. Remove possible product splashes that deposited on the machine's body with a wet sponge and dry immediately with a cloth.
3. Check that no residual from the work nor liquid did not enter the cone fixing the tools and in such case remove them with a cloth.

Reuse the blender to another operation or:

4. Position the engine's body on the special wall bearing.

6.2 - EXTRA CLEANING

6.2.1 - GENERAL INFORMATION (Fig. 63)

- Such operation is an exclusive requirement of this machine.
- This operation is to be carried out only in case of poor cleaning tasks executed by previous operators or in case unpleasant smells, internal encrustations, etc. can be perceived.
- This operation is quite delicate and particular even if simple and could compromise the functioning of the machine. Therefore, it is recommended to have it carried out only by responsible and expert members of staff.

ATTENTION: this operation exposes the operator to risks due to the manipulation of knives and sharp parts. Hence,

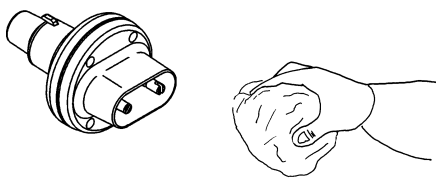

Fig. n°60

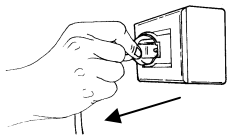

Fig. n°61

Fig. n°62

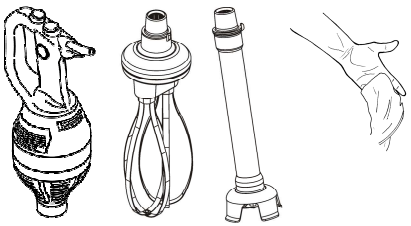

Fig. n°63

eration till a complete and thorough rinse is guarantied.

5) **WARNING:** after disconnecting the machine from the power outlet, use a non-abrasive wet sponge to clean the external parts of the shaft with hot water and, if necessary, the previously used detergent *(Fig. 57)*.
6) **WARNING:** disconnect the machine from the power outlet, check the outcome of the operation and, if necessary, repeat it from point (2) or intervene manually on the parts that are still dirty. The knives area could provoke wounds to the hands (Fig. 56). So, please pay the maximum attention.
7) Reuse the tool for another operation or:
8) Dry the tool with a cloth and position it vertically for 1 or 2 hours to ease the drainage of residual liquid (Fig. 57).
9) Hence place the shaft on the special wall bearing (Fig. 58).

WHIP (Fig. 59)

Proceed as described for the shafts till point 5.

6) disassemble the whip from the whip's body and check the complete cleaning.
   Intervene manually on the parts that are still dirty, paying attention to the internal area of the whip's body (Fig. 60)
   ATTENTION: Whips can be dangerous when handles with bare or wet hands. Wear protective gloves and pay maximum attention anyway.
   Reuse the tool for another operation assembling the whips to the whip's engine or:
7) Dry the whip's body with a cloth position it vertically for 1 or 2 hours

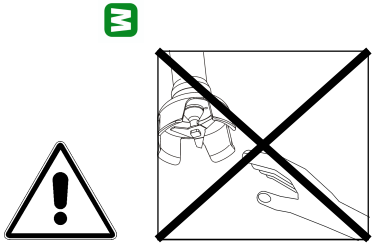

ATTENTION! *Fig. n°56*

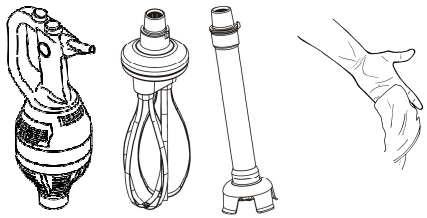

Fig. n°57

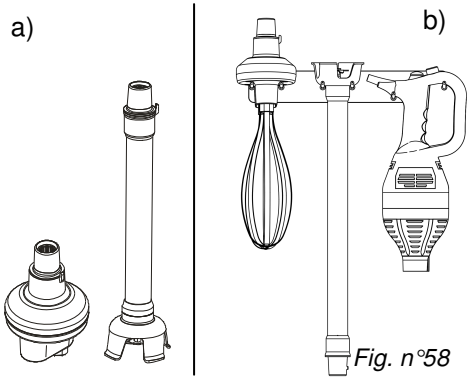

Fig. n°58

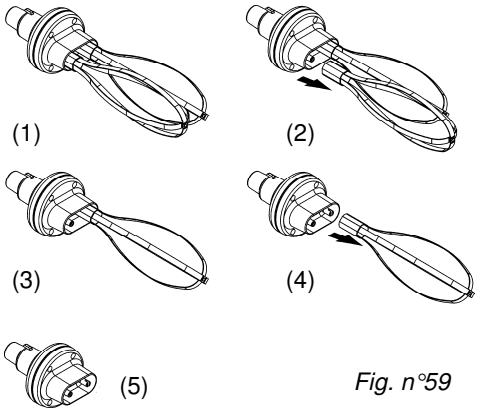

Fig. n°59

Do not leave the box exposed to humidity and rain (Fig. 3).

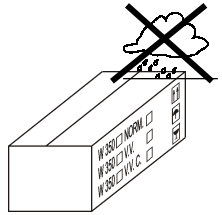

Fig. n°3

Do not overturn the box (Fig. 4).

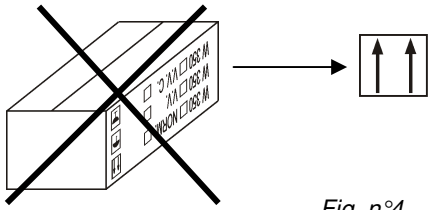

Fig. n°4

Please ensure that the box is held firmly at the far ends of its longest sides, while carrying it and keep the box itself parallel to the floor (Fig. 5).

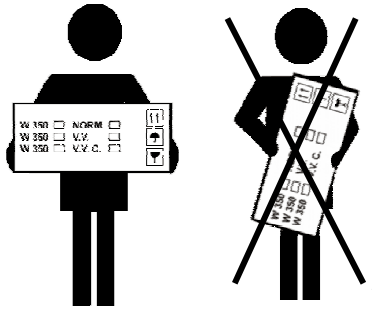

Fig. n°5

1.2 - BOX CHECK UPON RECEIPT

Once the item has been received, proceed to the opening and check that all the material is inside if the box does not show external damages. While if the box or the contents show signs of misusing (Fig. 6), knocks, fall or ruptures, it is necessary to inform the freight forwarder of the damage by writing a detailed report about the possible damages suffered within three days of the delivery date. Generally, complaints that are not communicated immediately are not taken into consideration by the freight forwarder.

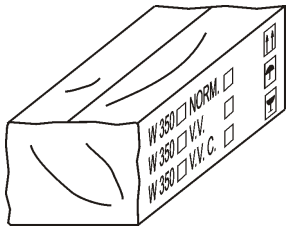

Fig. n°6

CHAP. 2 - INSTALLATION

ATTENTION!

All the tasks must be carried out by trained members of staff (Fig. 7).

Fig. n°7

2.1 - UNWRAPPING

Ensure that the box is not upturned by checking the direction of the external writings (Fig. 8)

The contents include:

THE ENGINE'S BODY

a) cartoon wrapping
b) polystyrene inserts
c) the machine's body
d) the instructions manual

Remove the adhesive tape fixing the upper flaps of the box and lift the machine's body matching the protecting inserts.

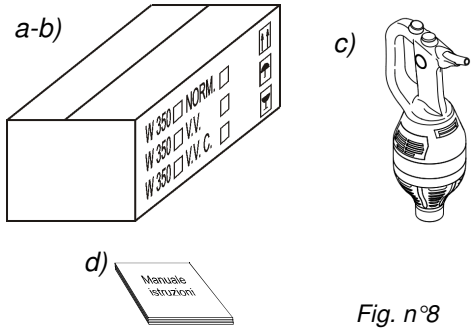

Fig. n°8

OPERATING SHAFT

The contents include (Fig. 9):

a) cartoon wrapping
b) polystyrene inserts
c) the operating shaft
d) dismounting accessories

Remove the adhesive tape fixing the upper flaps of the box and lift the shaft matching the protecting inserts.

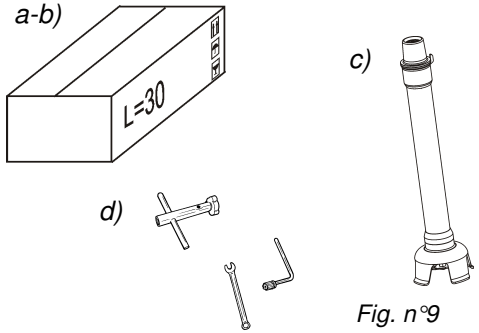

Fig. n°9

OPERATING WHIP

The contents include (Fig. 9):

a) cartoon wrapping
b) polystyrene inserts
c) the operating whip
d) dismounting accessories

Remove the adhesive tape fixing the upper flaps of the box and lift the whip matching the protecting inserts.

SUITCASE

If the accessory suitcase has been ordered, the machine and its related

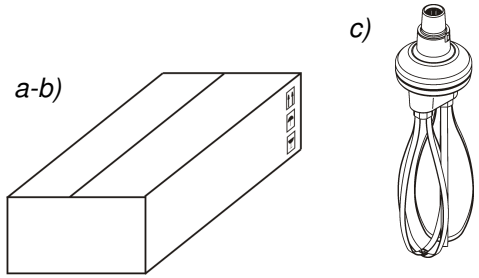

Fig. n°10

CHAP. 6 - REGULAR CLEANING

6.1 - GENERAL INFORMATION

- The cleaning of the machine is an operation to be done absolutely at the end of every working cycle.
- Immediate cleaning, can save a lot of time, guaranties hygiene and maintenance of the machine.
- The cleaning must be scrupulously detailed in all the parts that come into direct or indirect contact with food.
- The dipping blender must not be cleaned with water cleaners or water jets (Fig. 53), and/or with acid or corrosive detergents that can ruin the surface (Fig. 54)
- Tools and brushes or else must not be used as they might damage the machine (Fig. 54)
- Check that the vent's opening are not obstructed by dust, dirt or else periodically. In case these are obstructed call the CUSTOMER CENTRE.

  ATTENTION: do not use air jets or else that could provoke dirt's infiltrations inside the machine (Fig. 53)

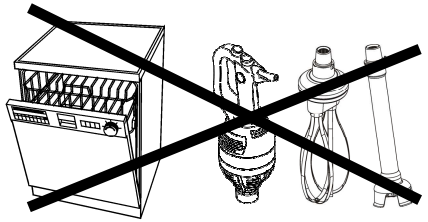

Fig. n°52

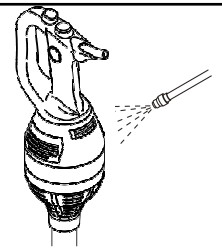

Fig. n°53

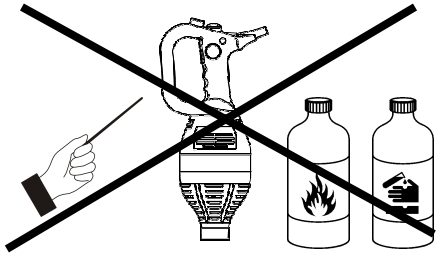

Fig. n°54

For a correct cleaning, it is necessary:

SHAFT (Fig. 55)

1) Get a container sufficiently high to immerge the shaft to the maximum level allowed
2) Fill it with hot water 50-60º C and add dish detergent according to the need
3) Let the machine operate for 20 seconds simulating the normal productive process.
4) Empty the container, rinse it and fill it with warm water. Let the machine operate again for some more 10-15 seconds, if necessary repeat the op-

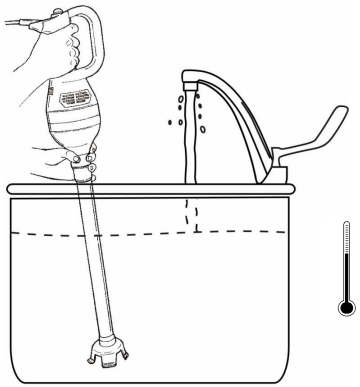

<u>Let the dipping blender work for 20 seconds during the cleaning stage.</u>

Fig. n°55

Switch the machine (please see paragraph 5.2) and move the shaft and the whip towards the inner part of the container with slow but regular revolving movements.
It is recommended not to touch the container's walls with the whips.

As for the shaft, alternate the revolution even in the movements from the top to the bottom to ease the entry of the products to be whisk in the operating bell (Fig. 48).

Work till the desired consistency is obtained, once finished using it, switch the machine off.

ATTENTION: Do not use the machine in free air and to avoid any risk of physical or mechanical damage, never extract the tool from the product while still rotating (Fig. 49).

ATTENTION: as a result of the centrifuge effect, the liquid tends to rotate and to higher its level closer to the border of the container, when the blender is functioning, hence never fill the container over 2/3 of its capacity (Fig. 48).

Never carry out work cycles for over 10 minutes and keep the blender switched off anyway for at least 10 minutes between a work cycle and the next (Fig. 51).

At the end of the working cycle, remove the machine from the working container and proceed immediately to the cleaning of the tool **(see chapter 6 Regular cleaning).**
Never leave the machine unattended inside the container.

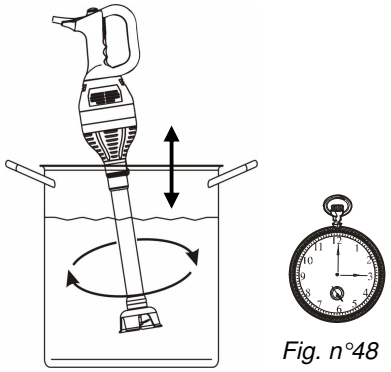

Fig. n°48

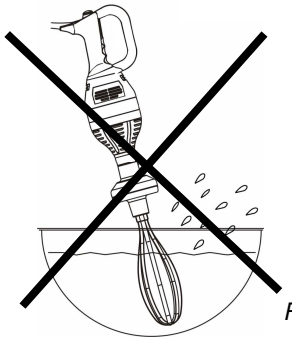

Fig. n°49

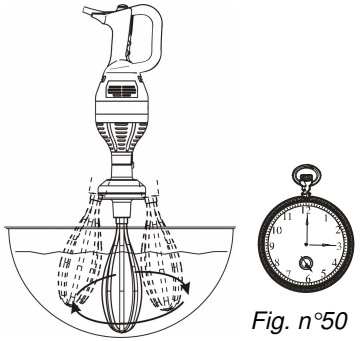

Fig. n°50

Working cycles:
10 minutes ON – 10 minutes OFF

Fig. n°51

accessories will be inside the suitcase itself.
The contents include (Fig. 11):
a) suitcase with punched protections (to be stored for future storing and transportation)
b) the machine's body
c) the operating shaft (if ordered), with related accessories for the demounting
d) the whip (if ordered)
e) the instructions manual
Remove the adhesive tape fixing the upper flaps of the box and lift the suitcase.
WALL BEARING (Fig. 12)
It will be supplied in a separate cartoon box KETTLE BEARING.

2.2 - PLACEMENT

The machine and its related accessories must be kept in a dry environment, far away from heat, humidity, splashes, dust and anything else that might damage the dipping blender and its accessories (Fig. 13).

The machine and its related accessories after having been used must be placed on the special wall support (Fig. 14 A).
In case the accessories are unused for a long time, they might be stored in other places as long as these latter respect the above-mentioned requirements and that they guarantee good conservation of the accessories themselves (for instance, drawers that can bump the components one against the other or cause them to fall must be avoided).
The conditions will be the same even if no wall bearing has been ordered.
Never position the dipping blender

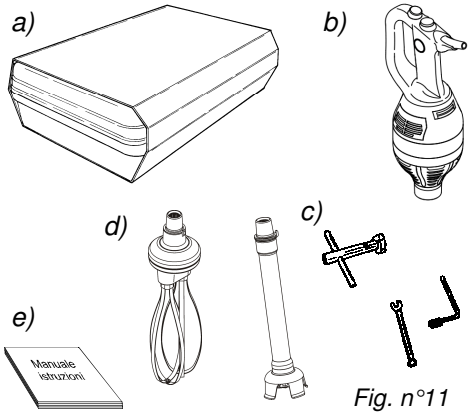

Fig. n°11

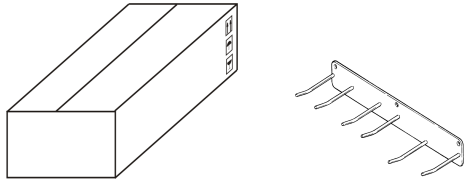

Fig. n°12

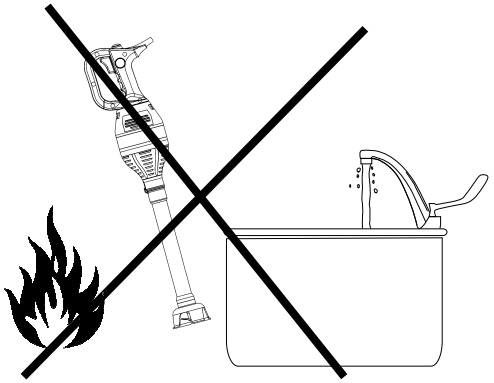

Fig. n°13

and the accessories inside the suitcase unless they are perfectly dry.

Fixing the wall bearing (Fig. 14):
The wall where the bearing is to be fixed must be stable, solid and must support he weight of the machine and its related accessories.
Fix the wall bearing by means of pressure screws with tassel of minimum 8mm diameter.
Position the wall bearing to a distance from the shelves and/or tables which is sufficient to contain the accessories.
Position the wall bearing as per the instructions of chapter 2.2.

Positioning on the wall bearing (Fig. 14A)
Hook the engine's body on the two right supports (of the wall bearing) with the handle towards right. The highest support inside the handle and the other outside beneath the entry of the feeding cable.
Shaft and whip can be hooked on either the other two spaces. The shaft is to be kept with the bell turned upwards, while the whip is to be kept as if operating.

Check that the bearings are always solid and parallel or the correct support of the machine might be compromised.

2.3 - ELECTRICAL CONNECTION

Check that the data reported on the register-technical plate (Fig. 15) of the delivery documents match the delivery documents, if not please contact the supplier to have an explanation.

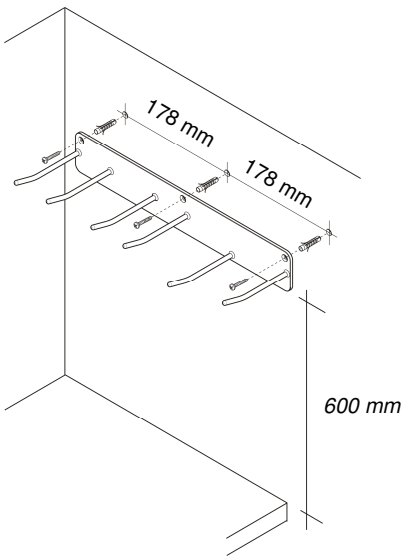

Fig. n°14

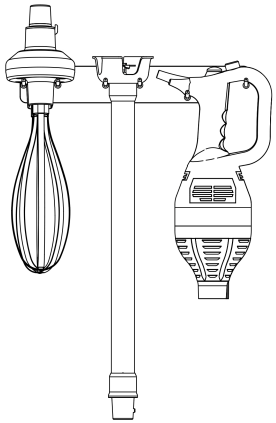
Fig. n°14A

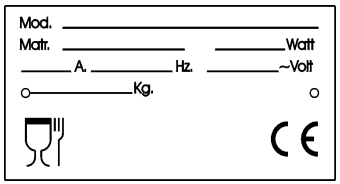

Fig. n°15

5.4 - MACHINE'S USE

ATTENTION:
- Check that the machine is perfectly dry and that there is no dirt or humidity from previous uses or washes (Fig. 43).
- Check that the shaft or the whip have not residual encrustations from previous uses.
- Before using it, ensure that the shaft and the whip are fixed to the engine's body properly (Fig. 44).
- Check that in the previous uses the components or protections have not been removed.
- Check the state of the feeding cable that could have been worn out by the different knives and tools in the kitchen. In this case, please contact CUSTOMER SERVICE immediately.

There are three shafts of different length. If available, always use the shaft whose length prevents the immersion of the engine of the product.
Assemble the tools as per chapter 5.

Grip the dipping blender by the handle with one hand and grip the lowest part above the maximum level (marked on the shaft Fig. 45) with the other one. Never grip the engine's body in a way to obstruct the vent's opening (Fig. 46).

Posture correctly and comfortably in order to work safely and easily. It is **FORBIDDEN** to use the immersion blender with pots placed on burners, heating plates or on excessively high worktops *(Fig. 47)*.

Insert the dipping blender with the tool slightly inclined to the maximum height marked on the working shaft. As for the whip, the product must always remain at 2-3 cm from the whip's body (Fig. 45).

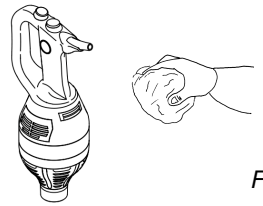
Fig. n°43

Fig. n°44

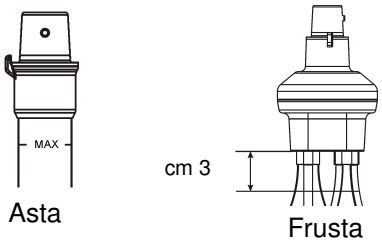

Fig. n°45

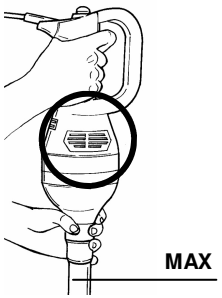

Fig. n°46

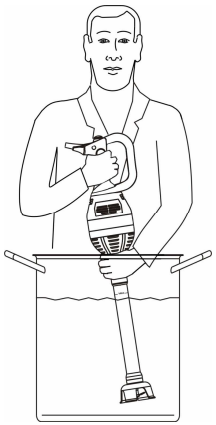
Fig. n°47

5.3 - USE'S FIELDS

The dipping blender has been designed to blend, emulsify and whip fruit, vegetables, meat, food in general.

The dipping blender has not been designed to work chemicals, sewages, glues and anything that is not strictly food.

Even if designed to blend also hot products, it is recommended to operate with products at a temperature below 70 degrees C. always for a short lapse of time (maximum 10 minutes). Followed by a pause of at least 10 minutes.
Do not leave the shaft immersed in food.

Blending:
Use of the shaft (Fig. 41)
Fruit, vegetables, meat, food in general as long as mixed in some liquid solution.
Food pieces must have maximum dimensions of a nut (3x3x3 cm cubes as long as without bones or stones and as long as they are not too hard and consistent).

Whipping, emulsifying:
Use the whip (Fig. 42)
Eggs, milk, etc. can be used to obtain creamy substances, mousses, cream at temperatures below 25°C as long as they do not have or they do not reach by the end of the operation consistencies that can be compared to other dough. For the latter the dipping blender is not suitable.

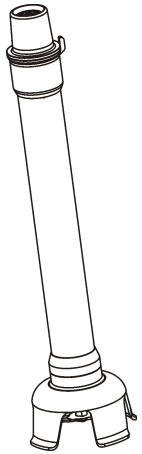

Fig. n°41

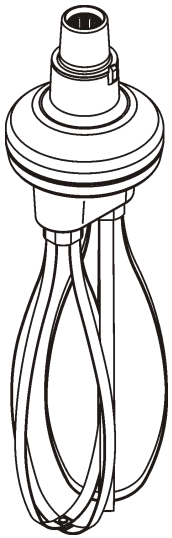

Fig. n°42

At this point, make sure that the electric plant of the building is according to law.
The dipping blender is supplied with a feeding cable 3x18AWG, length > 1,6m and a NEMA 5-15P plug (Fig. 16).
The machine is not foreseen to be ground mass as it is supplied with double isolation.
Link the dipping blender 120 V. – 60 Hz, interposing a differential (safety device, Fig. 17) - 10A ΔI = 0.03A-magnetothermic switch.

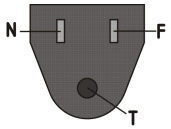

Fig. n°16

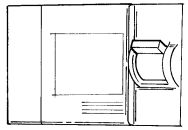

Fig. n°17

2.4 - ELECTRICAL DIAGRAM – SINGLE-PHASE 120V. *(Fig. n°18)*

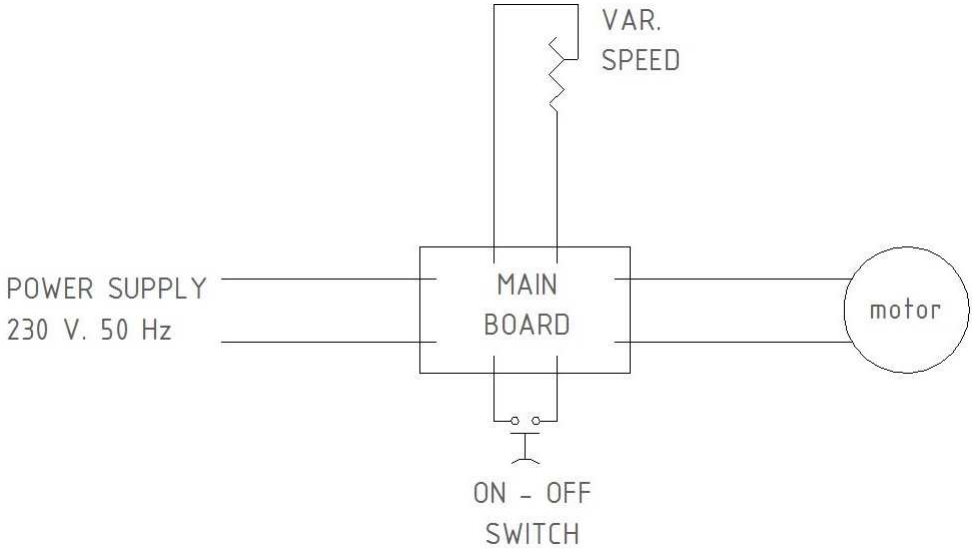

Fig. n°18

CHAP. 3 - MACHINE'S INFORMATION

3.1 - GENERAL PRECAUTIONS

Even if these general precautions seem obvious, they are of paramount importance for the installation, the use, the maintenance and possible inconveniences and related remedies.

- The producer has no responsibility in the following cases:
- ⇒ **The machine has been tampered by non-authorised members of staff**
- ⇒ **Some components have been replaced with non-original ones**
- ⇒ **The instructions of this manual have not been followed carefully**
- Keep this manual with care for future reference (Fig. 19)
- The dipping blender must be used only by trained members of staff, who must know the safety rules contained in this manual perfectly.
- In case of staff turn-over, please proceed to train the new members of staff in timely fashion
- Do not allow children, incompetents or untrained members of staff to use the blender (Fig. 20)
- Before carrying out any cleaning or maintenance task, unplug the machine from the electrical feeding network (Fig. 21)
- Before replacing accessories, unplug the machine from the electrical feeding network (Fig. 21)
- When intervening for ordinary maintenance or cleaning, carefully evaluate risks.
- Focus your attention on the operations in course during the use, maintenance and cleaning.
- To clean the machine, follow carefully the instructions of the chapter "Ordinary cleaning"

ATTENTION!

Fig. n°19

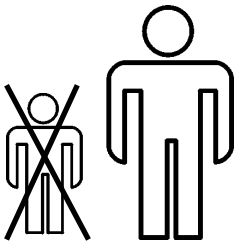

Fig. n°20

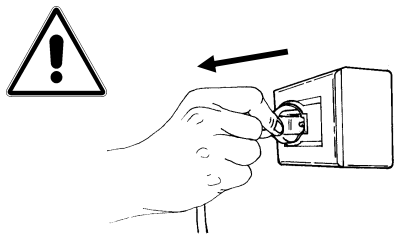

Fig. n°21

5.2 - PREPARATORY CHECK

Check that the tools are perfectly assembled as per **chapter 5.**
Check that the electrical connections has been done correctly as per **paragraph 2.3.**

Hold the machine from the handle with one hand and other in the lowest part of the motor (see figure 38). Then <u>try operating it with the following procedure</u> *(Figs. 38-39-40)*:

- Insert the machine's plug into the socket
- Press the power button (1) with your index finger. The machine will start working.
- If the machine is normal the engine starts at maximum speed. Be aware of the counterblow that the engine's power can provoke in the hand and in the wrist when gripping the machine tightly.
- If the machine has a speed variator, after the engine has started, work on the speed variator's handle (2) with the other hand and check the correct its functioning
- If present push the auto-blocking switch (3) and release the switch (1).
- To switch off the blender release the switch (1).
- In case of use with block, to stop the machine push and release the switch again (1) (see Fig. n.39).

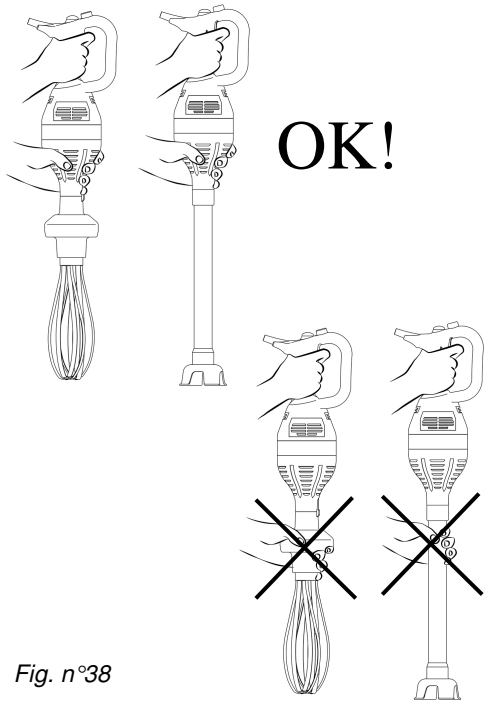

Fig. n°38

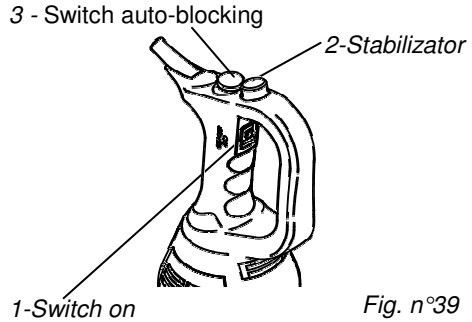

Fig. n°39

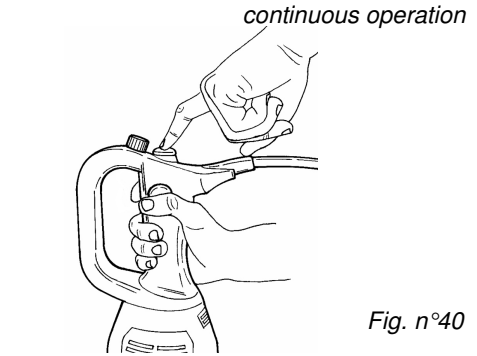

Fig. n°40

CHAP. 5 - USE OF THE MACHINE

5.1 - ACCESSORIES ASSEMBLY

The tools must be installed on the engine's body when the machine is unplugged.
All the dipping blender's tools are perfectly interchangeable. However, they might differ according to the model, date of production, producer. Hence, it is recommended to keep separate the various accessories of other dipping blenders.

ENGINE'S BODY - SHAFT (Fig. 36)
Grip the engine's body by the handle, grip the shaft with the other hand. Align the shaft's rung to the clutch of the machine's body (1). Insert the shaft deeply (2) and rotate it of about 90 degrees anticlockwise till the shaft is firmly blocked to the machine(3). The catch will fit the engine's body reference.

ENGINE'S BODY - WHIP (Fig. 36)
Grip the engine's body by the handle, grip the whip with the other hand. Align the shaft's rung to the clutch of the machine's body (1). Insert the shaft deeply (2) and rotate it of about 90 degrees anticlockwise till the whip is firmly blocked to the machine(3). The catch will fit the engine's body reference.

WHIP'S DISASSEMBLY (Fig. 37)
The stainless steel whips can be disassembled from the body of whips. Wear protective gloves. Hold the body firmly with one hand and with the other one grip the whip by the hooking base and pull towards the opposite direction with strength but without wrenching it till the piece is subdivided into two pieces (2). Proceed in the same way with the other whip (4).
In order to disassemble do the opposite.

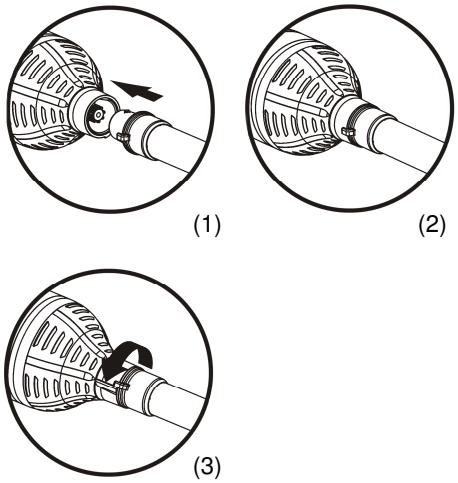

Fig. n°36

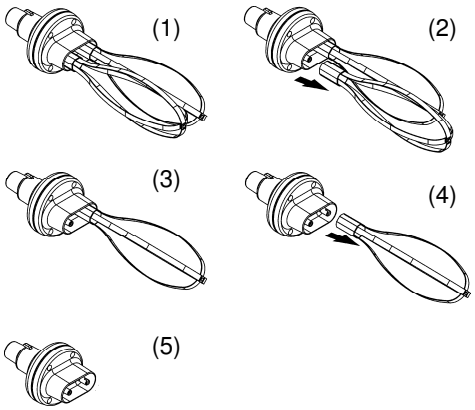

Fig. n°37

- Do not wash the blender by means of the dishwasher or water jets (Fig. 22-23)
- The dipping blender has been designed to blend fruit, vegetables and meat non-frozen boneless fruit, vegetables and meat to blend non-frozen boneless fruit, vegetables and meat **in liquid suspensions consisting of water or broth, at a maximum temperature of 70°C** (Fig. 24), and anyhow food that is not particularly hard or resistant to be processed. Any other use is to be considered improper and therefore dangerous.
- The whisk accessory is designed to whip and emulsify fluids such as cream, eggs, etc. at room temperatures <25°C. It has not been designed neither to cut nor to knead. Any other use is to be considered improper and therefore dangerous.
- Dry the machine's body and the used accessories after having cleaned them.
- Do not expose the blender to noxious agents such as the sun, the rain, splashes, humidity, frost (Fig. 25).
- Do not pull the feeding cable to unplug (Fig. 26).
- Check the status of the feeding cable on regular basis as a worn out cable or imperfect presents serious electrical dangers, call the Customer Service Centre.
- Regularly check the condition of the power cord; a damaged or worn cord constitutes a serious electrical hazard, therefore contact the Service Centre.
- Regularly check the condition of the power button: if dirty or damaged, it

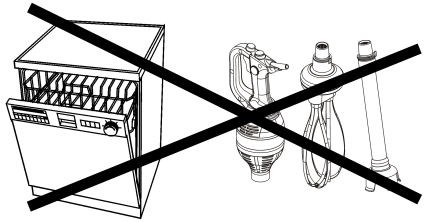

Fig. n°22

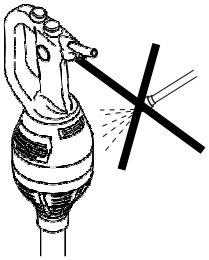

Fig. n°23

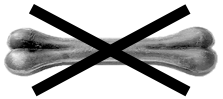

Fig. n°24

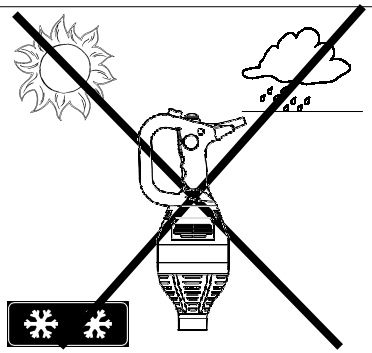

Fig. n°25

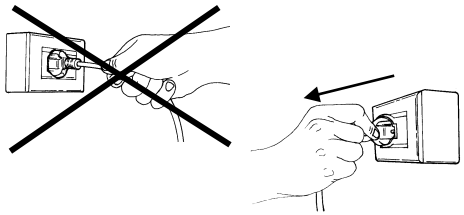

Fig. n°26

could be very dangerous, therefore contact the Service Centre.

- If the machine remains unutilised for a long time, have it checked by an Customer Service Centre before using it.
- If the machine shows signs of malfunctioning, it is recommended to switch it off, not to use it and not to intervene directly.
- to repair it and call the Customer Service Centre whose details can be seen at the back of this manual.
- In case of fall or immersion of the blender, do not use it and contact CUSTOMER SERVICE immediately to have a detailed check.
- Do not leave the dipping blender plugged in pointlessly. Unplug it when not using the machine. (Fig. 29)
- Do not hang f handle the dipping blender by means of the feeding cable (Fig. 27).
- Even if the machine is built according to the enforcing laws, there are some dangerous zones. Therefore, it is recommended to avoid to approach the hands to the blades or other parts in movement (Fig. 28).
- **Do not posture in such a way that might lead parts of the body in direct contact with the blades.**

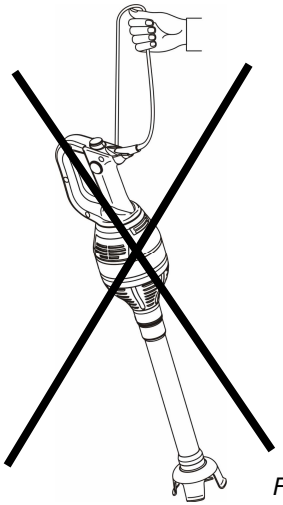

Fig. n°27

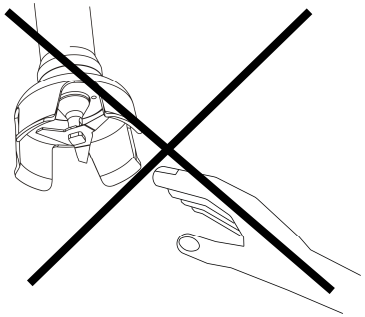

Fig. n°28

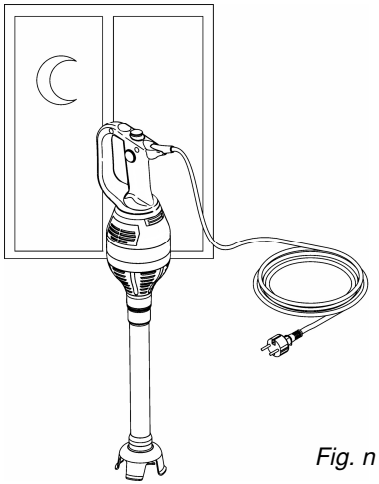

Fig. n°29

TABLE 2 - OVERALL DIMENSIONS AND TECHNICAL FEATURES *(Fig.35)*

	Power	Power source	Knives revolutions	Whisk revolutions	Working capacity	Dimensions AxBxC	Net weight
	Watt/Hp		*r.p.m.*	*r.p.m.*	*lt*	*mm*	*kg*
W 43	430/0,60	*1ph*	13.000	1.850	100	125x190x377	2,5
W 43 VT	430/0,60	*1ph*	2.200÷11.500	350÷1.800	100	125x190x377	2,5
W 55	550/0,80	*1ph*	13.500	1.900	200	125x190x385	3,5
W 55 VT	550/0,80	*1ph*	2.200÷11.500	350÷1.800	200	125x190x385	3,5
W 75	750/1,0	*1ph*	14.000	1.950	300	125x190x390	4
W 75 VT	750/1,0	*1ph*	2.200÷11.500	350÷1.800	300	125x190x390	4
Whips	-	-	-	-	-	117x113x385	2
						AxC / D	
Shaft 35	-	-	-	-	-	100x145 / 350	1
Shaft 45	-	-	-	-	-	100x515 / 450	1,5

ATTENTION:
The electrical features of the machine are indicated by a plate placed by the grip (Fig. 15).

		W 200-280-360 / VT	**W 430-550-750 / VT**
Noise level	dB	≤ 85	≤ 85

voked by the blade and the dragging device, by the whip and by other components of the machine or by electrocutions.

4.4 - OVERALL DIMENSIONS, WEIGHT, FEATURES

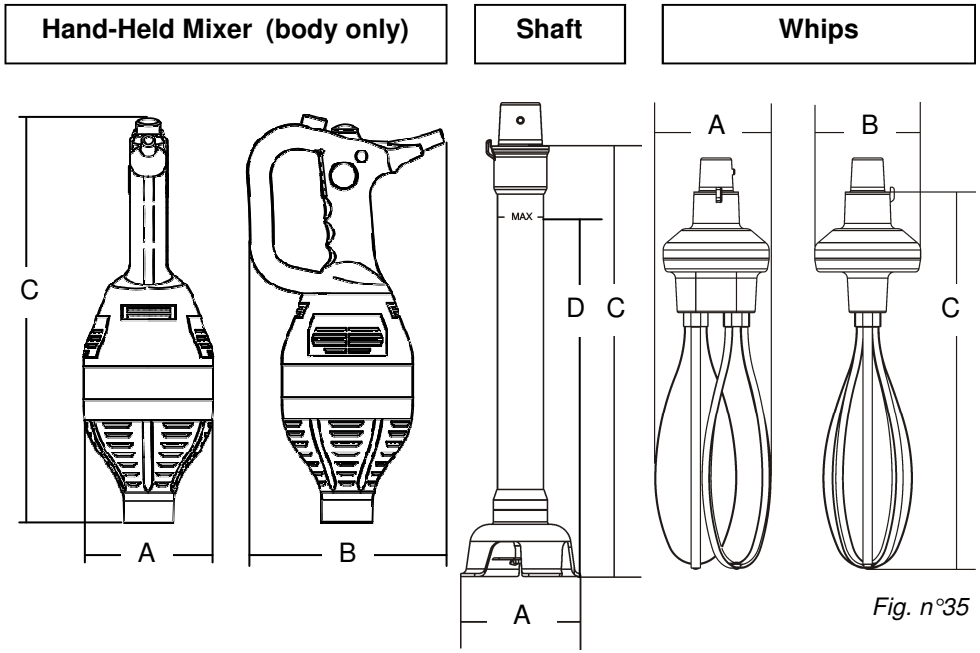

Fig. n°35

TABLE 1 - OVERALL DIMENSIONS AND TECHNICAL FEATURES *(Fig. 35)*

	Power	Power source	Knives revolutions	Whisk revolutions	Working capacity	Dimensions AxBxC	Net weight
	Watt/Hp		*r.p.m.*	*r.p.m.*	*lt*	*mm*	*kg*
W 20	200/0,27	1ph	16.000	2.300	20	100x182x340	2
W 20 VT	200/0,27	1ph	2.300÷16.000	350÷2.450	20	100x182x340	2
W 28	280/0,38	1ph	16.000	2.300	40	100x182x340	2,2
W 28 VT	280/0,38	1ph	2.300÷16.000	350÷2.450	40	100x182x340	2,2
W 36	360/0,50	1ph	16.000	2.300	70	100x182x348	2,5
W 36 VT	360/0,50	1ph	2.300÷16.000	350÷2.450	70	100x182x348	2,5
Whips	-	-	-	-	-	106x113x348	2
						AxC	
Shaft 25	-	-	-	-	-	94x250	0,5
Shaft 35	-	-	-	-	-	94x320	1

CHAP. 4 - GETTING ACQUAINTED WITH THE MACHINE

4.1 - MACHINE'S DESCRIPTION

The dipping blender is made up by more elements than the ones that in this manual are named *(Fig. n.30)*:

- Engine's body
- Operating shaft
- Operating whip

4.2 - IN-BUILT FEATURES

The engine's body is built in highly-resistant ABS with stainless steel and aluminium details. These materials guarantee hygiene when there is contact with food and good resistance to the agents contained by food. Moreover, high mechanical resistance is guaranteed due to their formation.
The operating shaft is made up almost completely by stainless steel, the main body in die-casted aluminium and coated in highly-resistant ABS.
The perfectly-insulated and watertight mechanical components inside it are made of stainless steel for a long-lasting resistance.

The wall bearing is made of stainless-steel just like the kettle support.
The wall suitcase is made up by plastic material outside and punched sponge inside.

KEY:

01	speed variator - optional	*10*	dragging device (female)
02	upper-grip handle	*11*	hooking rung
03	air-exhaust grill	*12*	shaft/whip blocking device
04	band	*13*	graduated tube
05	lower grip	*14*	bell
06	dragging device (male)	*15*	blade
07	air-aspiration grill	*16*	whips' body
08	switch 0/I	*17*	whip's insert
09	hooking cone	*18*	switch auto-blocking

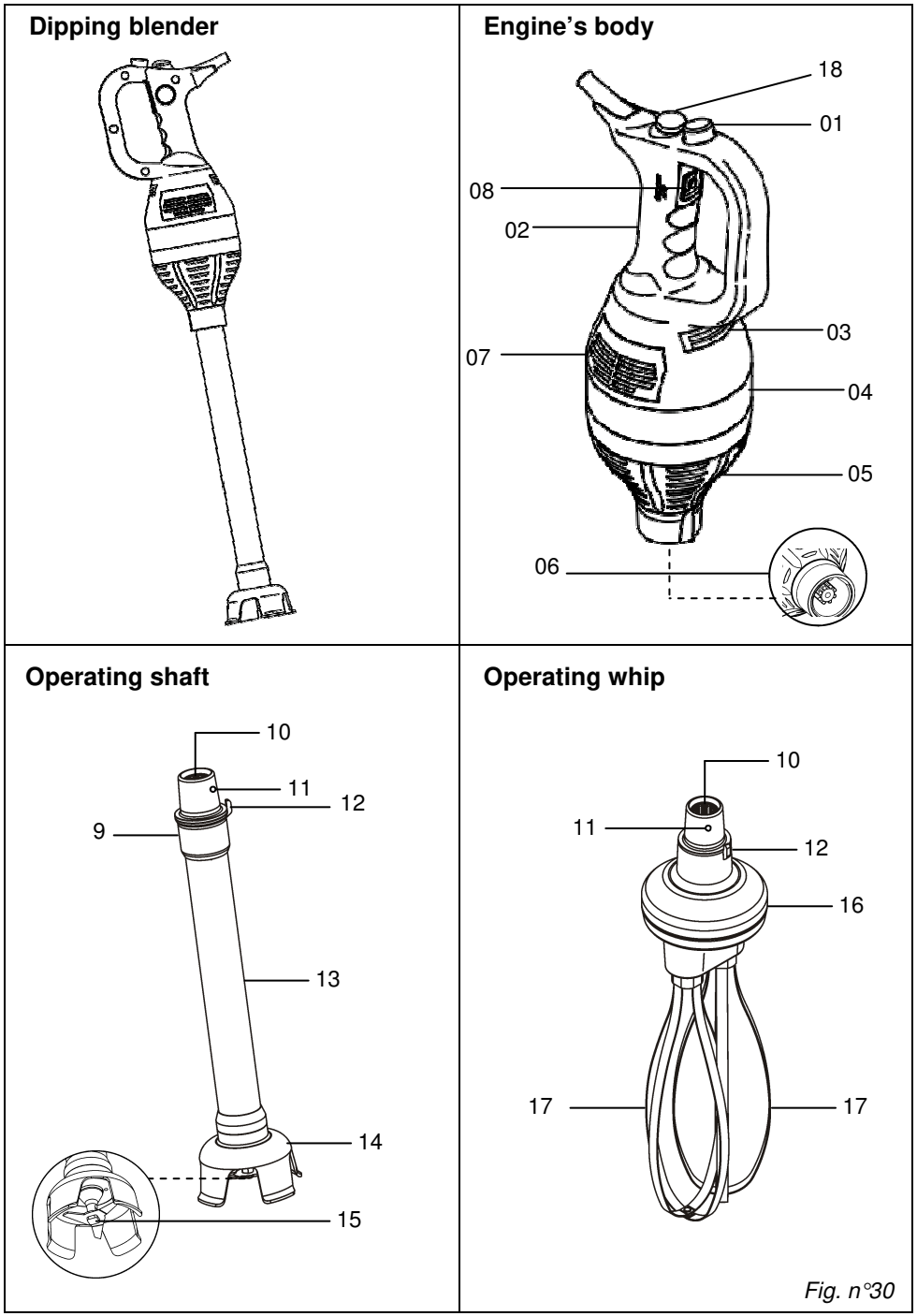

Fig. n°30

4.3 - IN-BUILT SAFETY DEVICES

4.3.1 - Mechanical safety devices

As far as mechanical-nature safety, the dipping blender described by this manual complies to:

- the **UL 763** norm
- the **CSA C22.2 nr 195** norm.

The dipping blender is provided with:

- Whip-protecting bell (Fig. 32 –ref.b)
- Shaft-protecting bell (Fig. 32 – ref.a)
- Dragging device inserted engine's stem (Fig. 33)
- Respect of the minimum space to grip the machine as per what is prescribed by law
- Maximum liquid level marked on the shaft (Fig. 45)

4.3.2 - Electrical safety devices

As far as electrical-nature safety, the dipping blender described by this manual complies to:

- the **UL 763** norm
- the **CSA C22.2 nr 195** norm.

Therefore the dipping blender is provided with:

- Double-insulating system to guarantee that all the details that might come in contact with the operator are not subject to tension not even in case of breakdown.
- Button located in a position suitable for preventing accidental start-up *(Fig. 34).*
- Internal components protection from liquid splashes
- Although the dipping blender is provided with the electrical and mechanical measures (operating during the working phase and during cleaning and maintenance) as per the enforcing laws, there are some **RESIDUAL RISKS** that cannot be eliminated completed. These are recalled by this manual under the titles **ATTENTION**. They concern the danger of cut, contusion and else that is pro-

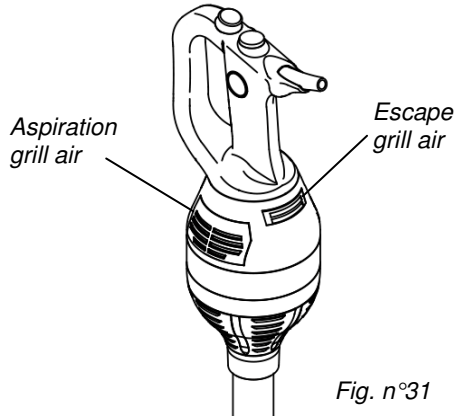

Fig. n°31

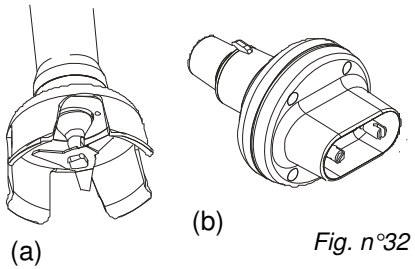

Fig. n°32

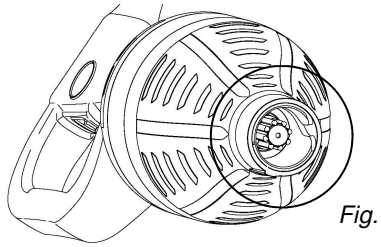
Fig. n°33

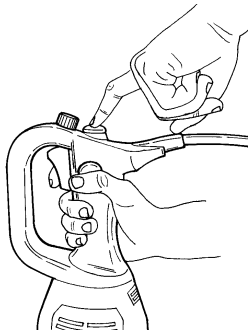
Fig. n°34