DREO | TurboPoly™ Fan 362

USER MANUAL

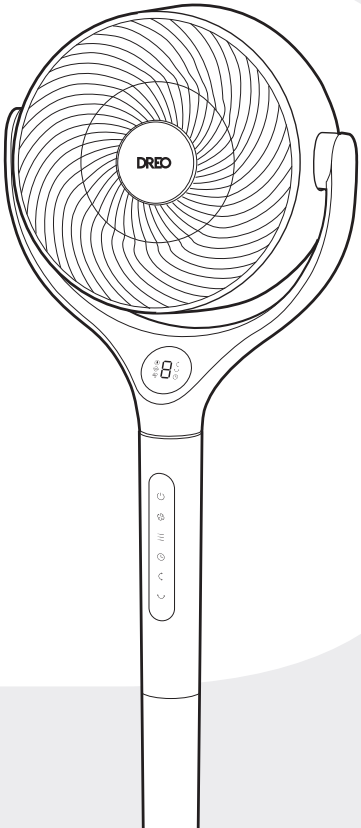

”

Thanks for Choosing DREO!

Your support means the world to us.
We hope you enjoy our product as much as we did creating it.

CONTENT

01
IMPORTANT SAFETY INSTRUCTIONS
1-3

02
ASSEMBLING YOUR APPLIANCE
4-6

03
KNOWING YOUR APPLIANCE
7-8

04
USING YOUR APPLIANCE
9-11

05
CLEANING AND MAINTENANCE
12-15

06
TROUBLESHOOTING
16

07
DREO CUSTOMER CARE
17-18

IMPORTANT SAFETY INSTRUCTIONS

01

READ ALL CAUTIONARY MARKINGS ON THE APPLIANCE AND SAFETY INSTRUCTIONS IN THE USER MANUAL BEFORE USE.



Do not cover the air inlet and outlet while in operation.



Do not use the air circulator near flammables and combustibles.

General Safety

1. Children shall not play with the appliance. Cleaning and maintenance shall not be performed by children without supervision.
2. Use the appliance as described in the user manual only. Any other use not recommended in the user manual may cause fire,electrical shock,or personal injury.
3. This appliance is not intended for use by persons (including children) with reduced physical, sensory or mental capabilities, or lack of experience and knowledge, unless they have been given supervision or instruction concerning use of the appliance by a person responsible for their safety.

Operation Safety

1. Place the appliance on a flat, dry surface before use.
2. Do not immerse in water and any other liquids.
3. Do not use the appliance until the base is installed.
4. Do not insert your fingers, pencil and any other objects into the grilles while in operation.
5. Do not attempt to repair or modify any electrical or mechanical functions on the appliance. Doing so will void your warranty. All servicing should be performed by qualified personnel only.
6. Ensure that the fan is switched off from the supply mains before removing the guard.

Electricity Safety

1. Make sure that the voltage of your electricity supply is the same as that indicated on the appliance.
2. Always unplug before cleaning or leaving the appliance unused for a long period of time. Keep your hands dry when plugging/unplugging.
3. Do not operate any fan with a damaged cord or plug. Discard fan or return to an authorized service facility for examination and/or repair.
4. Do not run cord under carpeting. Do not cover cord with throw rugs, runners, or similar coverings. Do not route cord under furniture or appliances. Arrange cord away from traffic area and where it will not be tripped over.
5. **WARNING:** To Reduce The Risk Of Fire, Electric Shock Or Injury To Persons, Do Not Use Replacement Parts That Have Not Been Recommended By The Manufacturer (e.g. Parts Made At Home Using A 3D Printer).
6. **WARNING:** To Reduce The Risk Of Fire Or Electric Shock, Do Not Use This Fan With Any Solid-State Speed Control Device.
7. **WARNING:** If the supply cord is damaged, it must be replaced by the manufacturer, its services agent or sililarly qualified persons in order to avoid a hazard.
8. The appliance shall not be modified by users, such as by adding supplemental filters to the appliance.
9. This appliance employs overload protection (fuse). A blown fuse indicates an overload or short-circuit situation. If the fuse blows,unplug the product from the outlet. Replace the fuse as per the user servicing instructions and check the appliance. If the replacement fuse blows, a short-circuit may be present and the appliance should be discarded or returned to an authorized service facility for examination and/or repair.
10. This appliance has a polarized plug (one blade is wider than the other). To reduce the risk of electric shock, this plug is intended to fit in a polarized outlet only one way, If the plug does not fit fully in the outlet, reverse the plug. If it still does not fit, contact a qualified electrician. Do not attempt to defeat this safety feature.

FOR HOUSEHOLD USE ONLY
READ AND SAVE THESE INSTRUCTIONS

Gentle Reminder:



Check the appliance regularly and refer to TROUBLESHOOTING or contact our customer support if it shows any of the following signs:

- Power cord or plug is damaged.
- Loud noise, unusual smell or excessive heat.

Specifications

Model No.	DR-HPF022
Input	AC 120V~60Hz
Rated Power	36W
Battery Type	AAA

ASSEMBLING YOUR APPLIANCE

02

Assembly Instructions

When using the appliance for the first time, remove the wraps and attach the parts by following the steps below.

1

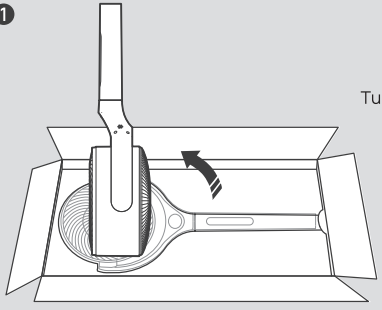

Turn the fan body upside down.

2

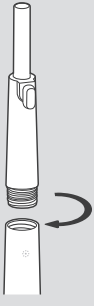

Install the short pedestal into the fan body.

3

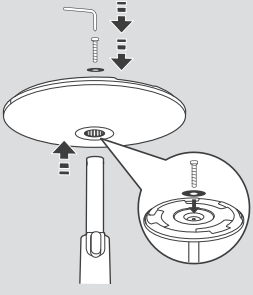

Push the column into the base, then screw through the flat washer, and into the bottom of the column.

4

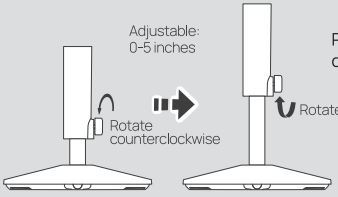

Raise or lower the appliance to the desired height.

5

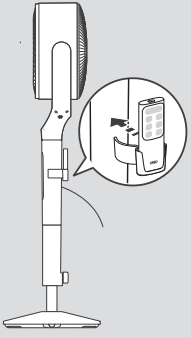

Install the remote control holder.

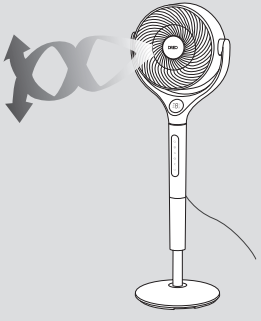

CAUTION

Do not operate the air circulator fan if the base has not been installed.
Please excercise caution and handle the base with care during installation.

Package Contents

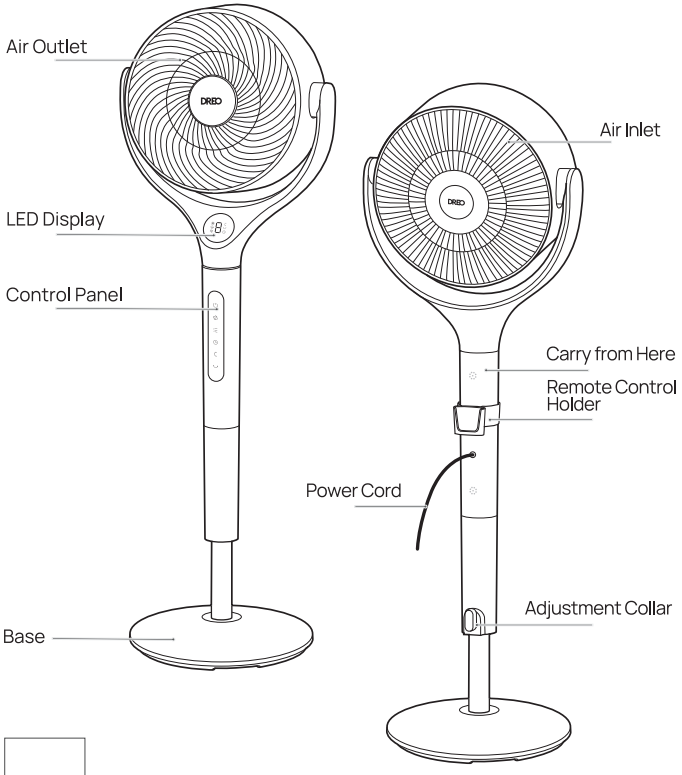

User Manual

Quick Start Guide

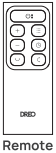

Remote Control



2x AAA Batteries



Remote Control Holder

Flat Washer



Screw for Base



Screwdriver for Base

KNOWING YOUR APPLIANCE

03

Control Panel



Power Button
- Turn power on/off.
- Long press for 10 seconds to reset to factory settings.



Fan Speed Button
- 1-9 levels & Turbo Mode
(display will show "H" and the Turbo Mode icon will light up).



Mode Button
- Switch between Normal/Auto/Turbo Mode.
- Long press for 3 seconds to mute/unmute.



Timer Button
- Select to set a timer (0-8h).



Vertical Oscillation Button
- Sweep airflow vertically (0°/60°/90°/120°).



Horizontal Oscillation Button
- Sweep airflow horizontally (0°/30°/60°/90°/120°).

Note:
- When turned off, display will show — while your fan is resetting to its original position. You can enable/disable this feature by long pressing for 3 seconds.

LED Display

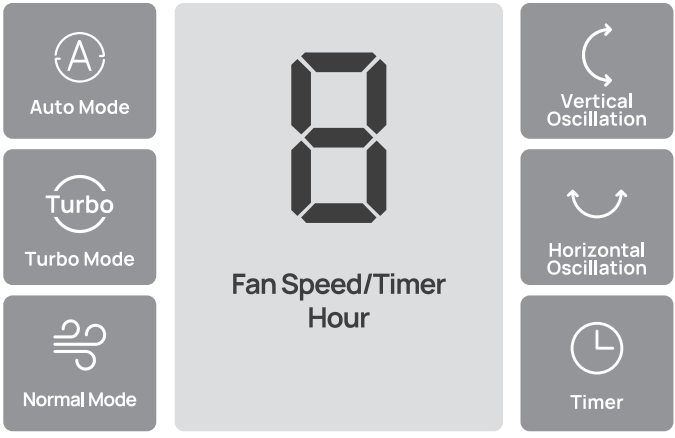
Auto Mode
Turbo
Turbo Mode
Normal Mode
8
Fan Speed/Timer
Hour
Vertical
Oscillation
Horizontal
Oscillation
Timer

USING YOUR APPLIANCE

04

Getting the Most out of Your Air Circulator

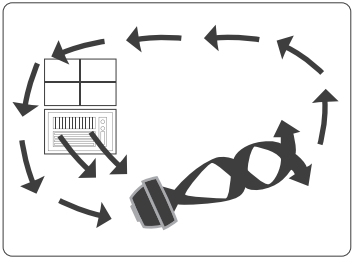

Summer:

Use with Air Conditioner

Position the air circulator in front of your AC to circulate cold air and provide better cooling.

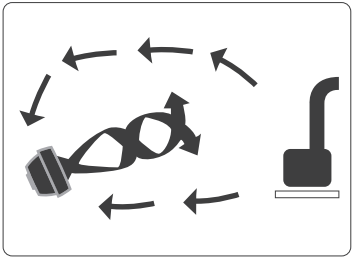

Winter:

Use with Heater

Send the heat to the corner of the room and circulate warm air faster.

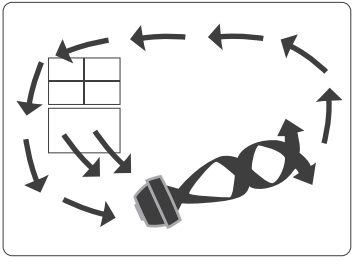

Spring & Fall:

Circulation

Make the indoors as fresh and pleasant as the outdoors.

Working Modes (Press on the remote)

	Normal Mode Fan runs at the fixed speed.
	Auto Mode Fan automatically increases speed when room temp is higher and decreases speed when temp is lower.
Turbo	**Turbo Mode** Fan runs at the maximum speed.

Additional Features



Timer

When the fan is ON/OFF, touch the timer button on the remote control repeatedly to set a timer from 0 to 8 hours. When the timer ends, the fan will stop/start running automatically. To cancel, set the time to 0 hour.

Note: When the auto off timer is enabled, display will return to fan speed after 3 seconds.



Child Lock

Long press and for 3 seconds to turn on/off Child Lock.

Note: Child Lock doesn't apply to operations from the remote control. You can also turn off Child Lock by re-plugging in, resetting to factory settings.



Memory

If the fan is turned OFF or disconnected from power, it will operate under the previous settings (except the Timer setting) when it is turned ON again.



Countdown Display

When long pressing buttons for Factory Reset, Child Lock, and Mute, a countdown will show on the display accordingly.



Display Auto Off

Display turns off after 1 minute (after 5 seconds in sleep mode). Wake up the display with any button.

Remote Control

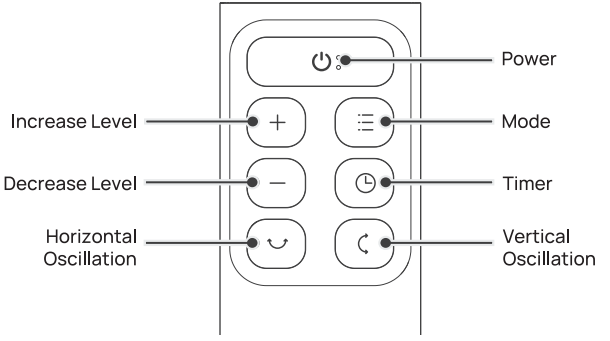

Battery Replacement

1. Remove the battery cover in the direction indicated by the arrow.
2. Replace with two new AAA 1.5V batteries. Make sure that the positive (+) and negative (-) terminals are positioned correctly.
3. Push the battery cover back into place.

WARNING

- Replace with new batteries of the same type when replacement is required.
- Remove the batteries when the remote control is unused for long period of time.
- Do not attempt to dismantle the batteries.
- Do not dispose the batteries in fire, batteries may explore or leak.
- Chemical burn hazard. Keep batteries away from children.
- Do not mix old and new batteries and Do not mix alkaline, standard (carbon-zinc) or rechargeable (ni-cad, ni-mh, etc.) batteries.

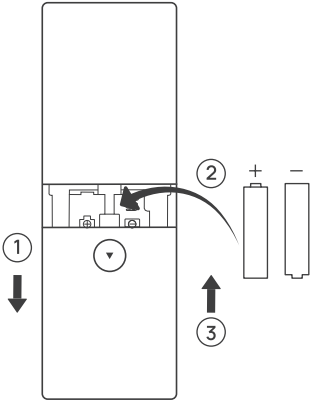

CLEANING AND MAINTENANCE

05

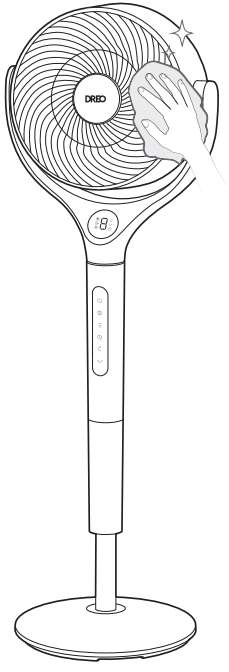

Outer Surface
Gently wipe off the dust with a soft, dry cloth.

Base
The base can be disassembled in the reverse order of assembly.

CAUTION

1. Always unplug the fan before any cleaning or maintenance to avoid the risk of fire, electric shock, or injury to persons.
2. Do not immerse in water or get water inside the motor housing.
3. Do not use any chemical agents when cleaning the fan.
4. Store in a cool, dry place and cover it to protect from dust.

WARNING

To reduce the risk of electrical shock and injury to persons, turn off and unplug the appliance before any cleaning and maintenance.

1

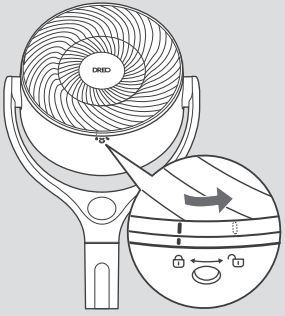

Remove the screw on the front grille, rotate the grille counterclockwise to take it off.

2

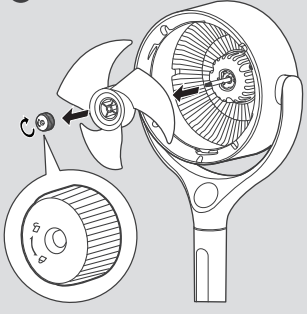

Remove the blade cap by rotating it as shown and take the blade assembly out of the shaft.

3

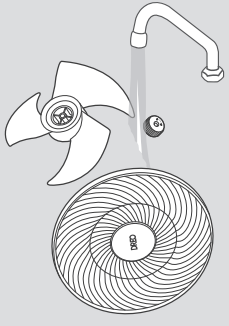

Rinse cap, blades, and grille under running water or with a clean, damp cloth.

4

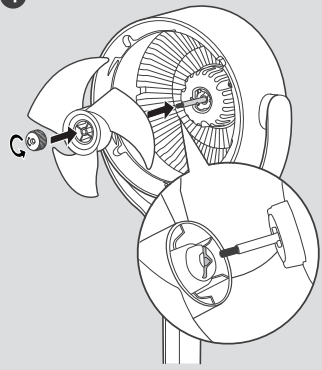

Dry up all parts, and insert the blade assembly back into the shaft by aligning the centers.

5

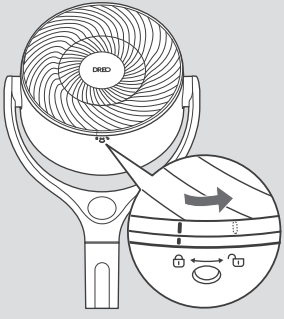

Align the point on the front grille with the right point on the casing, then rotate the grille clockwise and install the screw back in place.

User Servicing Instructions (Fuse)

This appliance features a fused safety plug that protects against overload or short-circuit situations. If the fuse blows, please cut off power and follow the below instructions or consult a qualified electrician.

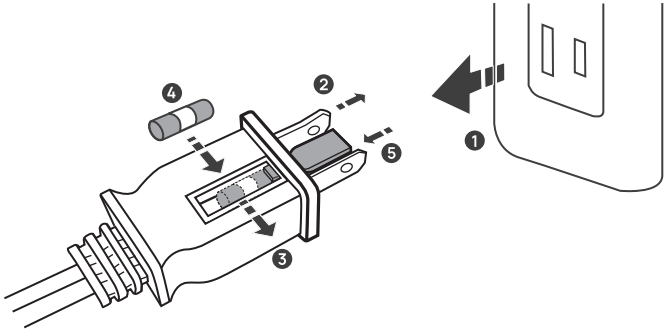

1. Grasp plug and remove from the receptacle or other outlet device. Do not unplug by pulling on cord.
2. Open fuse cover. Slide open fuse access cover on top of attachment plug towards blades.
3. Remove fuse carefully. Push the fuse from the other side to remove the fuse.
4. Risk of fire. Replace fuse only with 5 Amp.125 Volt fuse.
5. Close fuse cover. Slide closed the fuse access cover on top of attachment plug.

WARNING

Risk of fire. Do not replace attachment plug.
Contains a safety device(fuse) that should not be removed.
Discard product if the attachment plug is damaged.

TROUBLESHOOTING 06

My appliance won't turn on!

Make sure that the cord is connected to a powered outlet and the mains voltage corresponds with the voltage indicated on the appliance.

My appliance is shaky and wobbling!

1. Place the appliance on a flat, level surface.
2. Incorrect installation might also cause shakiness. Please refer to the assembly instructions in **page 4-5**.

My appliance is making vibration and noise!

1. Place the appliance on a flat, level surface.
2. Be sure not to insert anything into the air inlet and outlet.

If your problem is not listed or still persists, please contact our Customer Support (see page 18).

DREO CUSTOMER CARE

07

12-MONTH LIMITED WARRANTY

What is Covered

DREO warrants to you that your product will be free from original defects in materials and workmanship for a period of twelve (12) months from the date of your purchase, when you use your product for intended purposes in accordance with this User Manual.

Please retain your proof of purchase. If you do not retain your proof of purchase, your warranty will start two (2) months from the date of manufacture printed on your product label.

What is Not Covered

This limited warranty only applies to the original purchaser of your product and is non-transferable. This warranty is only valid if your product is used in the country in which you originally purchased it. In addition, this warranty will not apply, and DREO will not be liable for any costs, damages, or repairs, in connection with any of the following:

- Accidents or use of your product with inappropriate force;
- Damage or destruction caused by wrong voltage or unstable electric current;
- Normal wear and tear;
- Careless operation or handling, misuse, abuse, neglect, and/or failure to maintain or use your product in accordance with this User Manual;
- Any partially or completely altered, modified and/or dismantled products;
- Reduction in battery discharge time due to battery age or use (as applicable);
- Products with altered or removed serial numbers;
- Clearing any blockages from the product;
- Purchases from retailers and distributors not authorized by DREO to sell this product;
- Defects caused by or resulting from damages from shipping or handling by any third party not authorized by DREO to ship or handle your product; or
- Defects caused by or resulting from repairs, service, improper maintenance, or alteration to your product or any of its components by anyone other than a repair person authorized by DREO.

Any service and customer support that DREO provides to you under this limited warranty will not extend the duration of this limited warranty.

Warranty Limitations and Exclusions

ANY IMPLIED WARRANTIES RELATING TO YOUR PRODUCT, INCLUDING BUT NOT LIMITED TO THE WARRANTY OF MERCHANTABILITY AND THE WARRANTY OF FITNESS FOR A PARTICULAR PURPOSE, ARE LIMITED TO THE DURATION OF THE LIMITED WARRANTY SET FORTH ABOVE AND ARE OTHERWISE DISCLAIMED.

THIS LIMITED WARRANTY SHALL BE THE SOLE REMEDY OF THE PURCHASER OR USER OF THE PRODUCT, AND DREO SHALL NOT BE LIABLE FOR AN ALLEGEDLY DEFECTIVE OR DAMAGED PRODUCT EXCEPT TO REPAIR OR REPLACE IT IN ACCORDANCE WITH THIS LIMITED WARRANTY. DREO WILL NOT BE LIABLE FOR SPECIAL, INCIDENTAL, INDIRECT, CONTINGENT, OR CONSEQUENTIAL DAMAGES OR LOSSES OF ANY NATURE THAT YOU MAY INCUR IN CONNECTION WITH YOUR PURCHASE OR USE OF YOUR PRODUCT.

Some jurisdictions do not allow limitations on how long an implied warranty lasts or the exclusion or limitation of incidental or consequential damages, so the above limitations or exclusions may not apply to you. This limited warranty gives you specific legal rights, and you also may have other rights which vary from jurisdiction to jurisdiction.

Limited Remedies

If your product fails because of an original defect in material and/or workmanship during the warranty period, DREO will repair or replace (in DREO's sole discretion) your product.

To obtain warranty service on your product, contact us at support@dreo.com or at (888) 290-1688 (available from Monday-Friday, 9:00 AM-5:00 PM PST/PDT) for further instructions.

IN THE EVENT OF AN ORIGINAL DEFECT IN MATERIAL AND/OR WORKMANSHIP, TO THE EXTENT PERMITTED BY LAW, THE REMEDIES SET FORTH IMMEDIATELY ABOVE ARE YOUR SOLE AND EXCLUSIVE REMEDIES.

FCC Statement

This device complies with Part 15 of the FCC Rules. Operation is subject to the following two conditions: (1) this device may not cause harmful interference, and (2) this device must accept any interference received, including interference that may cause undesired operation.

Please note that changes or modifications of this product is not expressly approved by the party responsible for compliance could void the user's authority to operate the equipment.

NOTE: This equipment has been tested and found to comply with the limits for a Class B digital device, pursuant to Part 18 of the FCC Rules. These limits are designed to provide reasonable protection against harmful interference in a residential installation. This equipment generates, uses, and can radiate radio frequency energy, and, if not installed and used in accordance with the instructions, may cause harmful interference to radio communications. However, there is no guarantee that interference will not occur in a particular installation.

If this equipment does cause harmful interference to radio or television reception, which can be determined by turning the equipment off and on, the user is encouraged to try to correct the interference by one or more of the following measures:

- Reorient or relocate the receiving antenna.
- Increase the separation between the equipment and receiver.
- Connect the equipment to an outlet on a circuit different from that to which the receiver is connected.
- Consult the dealer or an experienced radio/TV technician for help.

Model No.: DR-HPF022
Rev_1.0_EN

We're Here to Help!

(888) 290-1688 (Mon - Fri, 9:00 am-5:00 pm PST/PDT)
support@dreo.com
www.dreo.com

Hesung Innovation Corp
377 Valley Rd, Unit #2686, Clifton, NJ 07013 USA

www.dreo.com

Looking for help?

Contact us to get expert support.

support@dreo.com (888) 290-1688 www.dreo.com

Mon - Fri, 9:00 am-5:00 pm PST/PDT